INTRODUCTION

How to Use This Manual

This manual is divided into multiple sections. The first page of each section is marked with a black tab that lines up with its corresponding thumb index tab on this page and the back cover. You can quickly find the first page of each section without looking through a full table of contents. The symbols printed at the top corner of each page can also be used as a quick reference system.
Each section includes:

1. A table of contents, or an exploded view index showing:
   - Parts disassembly sequence.
   - Bolt torques and thread sizes.
   - Page references to descriptions in text.
2. Disassembly/assembly procedures and tools.
3. Inspection.
4. Testing/troubleshooting.
5. Repair.
6. Adjustments.

Safety Messages

Your safety, and the safety of others, is very important. To help you make informed decisions, we have provided safety messages, and other safety information throughout this manual. Of course, it is not practical or possible to warn you about all the hazards associated with servicing this vehicle. You must use your own good judgment.
You will find important safety information in a variety of forms including:

- **Safety Labels** — on the vehicle.
- **Safety Messages** — preceded by a safety alert symbol ⚠ and one of three signal words, DANGER, WARNING, or CAUTION. These signal words mean:

⚠ DANGER	You WILL be KILLED or SERIOUSLY HURT if you don't follow instructions.
⚠ WARNING	You CAN be KILLED or SERIOUSLY HURT if you don't follow instructions.
⚠ CAUTION	You CAN be HURT if you don't follow instructions.

- **Instructions** — how to service this vehicle correctly and safely.

All information contained in this manual is based on the latest product information available at the time of printing. We reserve the right to make changes at anytime without notice. No part of this publication may be reproduced, or stored in a retrieval system, or transmitted, in any form by any means, electronic, mechanical, photocopying, recording, or otherwise, without the prior written permission of the publisher. This includes text, figures, and tables.

As you read this manual, you will find information that is preceded by a NOTICE symbol. The purpose of this message is to help prevent damage to your vehicle, other property, or the environment.

First Edition 10/2006 2,320 pages
All Rights Reserved
Specifications apply to USA and Canada

HONDA MOTOR CO., LTD.
Service Publication Office

As sections with * include SRS components; special precautions are required when servicing.

General Information
Specifications
Maintenance
*Engine Electrical
Engine Mechanical
Engine Cooling
Fuel and Emissions
*Transaxle
*Steering
Suspension (Including TPMS)
Brakes (Including VSA)
*Body
*Heating, Ventilation, and Air Conditioning
*Body Electrical
*Audio, Navigation, and Telematics
*Restraints

SUPPLEMENTAL RESTRAINT SYSTEM (SRS)

The CR-V SRS includes a driver's airbag in the steering wheel hub, a passenger's airbag in the dashboard above the glove box, seat belt tensioners in the front seat belt retractors, seat belt buckle tensioners in the front seat belt buckles, side curtain airbags in the sides of the roof, and side airbags in the front seat-backs. Information necessary to safely service the SRS is included in this Service Manual. Items marked with an asterisk (*) on the contents page include or are located near SRS components. Servicing, disassembling, or replacing these items require special precautions and tools, and should be done only by an authorized Honda dealer.

- To avoid rendering the SRS inoperative, which could lead to personal injury or death in the event of a severe frontal or side collision, all SRS service work should be done by an authorized Honda dealer.
- Improper service procedures, including incorrect removal and installation of the SRS, could lead to personal injury caused by unintentional deployment of the airbags and/or side airbags.
- Do not bump or impact the SRS unit, front impact sensors, or side impact sensors when the ignition switch is ON (II), or for at least 3 minutes after the ignition switch is turned OFF; otherwise, the system may fail in a collision, or the airbags may deploy.
- SRS electrical connectors are identified by yellow color coding. Related components are located in the steering column, front console, dashboard, dashboard lower panel, in the dashboard above the glove box, in the front seats, in the roof side, and around the floor. Do not use electrical test equipment on these circuits.

General Information

Chassis and Paint Codes 1-2

Identification Number Locations 1-3

Danger/Warning/Caution Label Locations 1-4

Under-hood Emission Control Label 1-6

Lift and Support Points 1-7

Towing 1-8

Parts Marking 1-10

Precautions for Real-time 4WD (Four-wheel Drive) 1-10

Chassis and Paint Codes

Vehicle Identification Number

5J6 RE3 8 3 * 7 L 000001

a b c d e f g h

a. Manufacturer, Make and Type of Vehicle
5J6: Honda of America Mfg., Inc., U.S.A.
Honda Multipurpose passenger vehicle
JHL: Honda Motor Co., Ltd.
Honda Multipurpose passenger vehicle

b. Line, Body and Engine Type
RE3: CR-V 2WD/K24Z1
RE4: CR-V 4WD/K24Z1

c. Body Type and Transmission Type
8: 5-door/5-speed Automatic

d. Vehicle Grade (Series)
3: LX
5: EX
7: EX-L

e. Check Digit

f. Model Year
7: '07

g. Factory Code
L: East Liberty, Ohio Plant, USA
C: Saitama Factory in Japan

h. Serial Number
000001—: USA Models
800001—: Canada Models

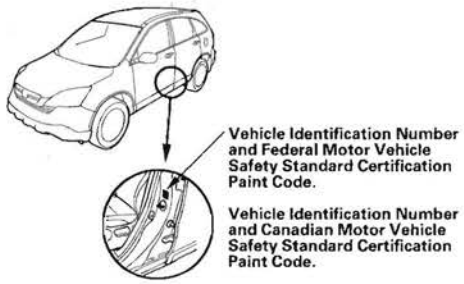

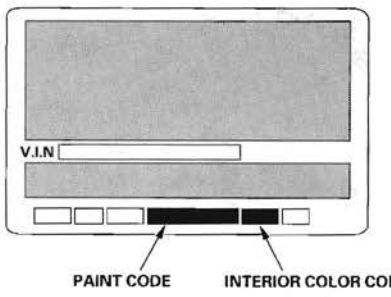

Engine Number

K24Z1 - 1000001

a b

a. Engine Type
K24Z1: 2.4 L DOHC i-VTEC Sequential Multiport Fuel-injected engine

b. Serial Number
1000001—: Producted in Ohio plant
1410001—: Producted in Saitama factory (4WD)
1740001—: Producted in Saitama factory (2WD)

Transmission Number

MZJA - 1000001

a b

a. Transmission Type
MZJA: 5-speed Automatic (2WD)
MZHA: 5-speed Automatic (4WD)

b. Serial Number

Paint Code

Code	Color	USA models	Canada models
B-536P	Royal Blue Pearl	○	○
B-538M	Glacier Blue Metallic	○	○
B-92P	Nighthawk Black Pearl	○	○
G-526M	Green Tea Metallic	○	○
NH-578	Taffeta White	○	
NH-711M	Whistler Silver Metallic	○	○
R-525P	Tango Red Pearl	○	○
YR-566M	Borrego Beige Metallic	○	○

Identification Number Locations

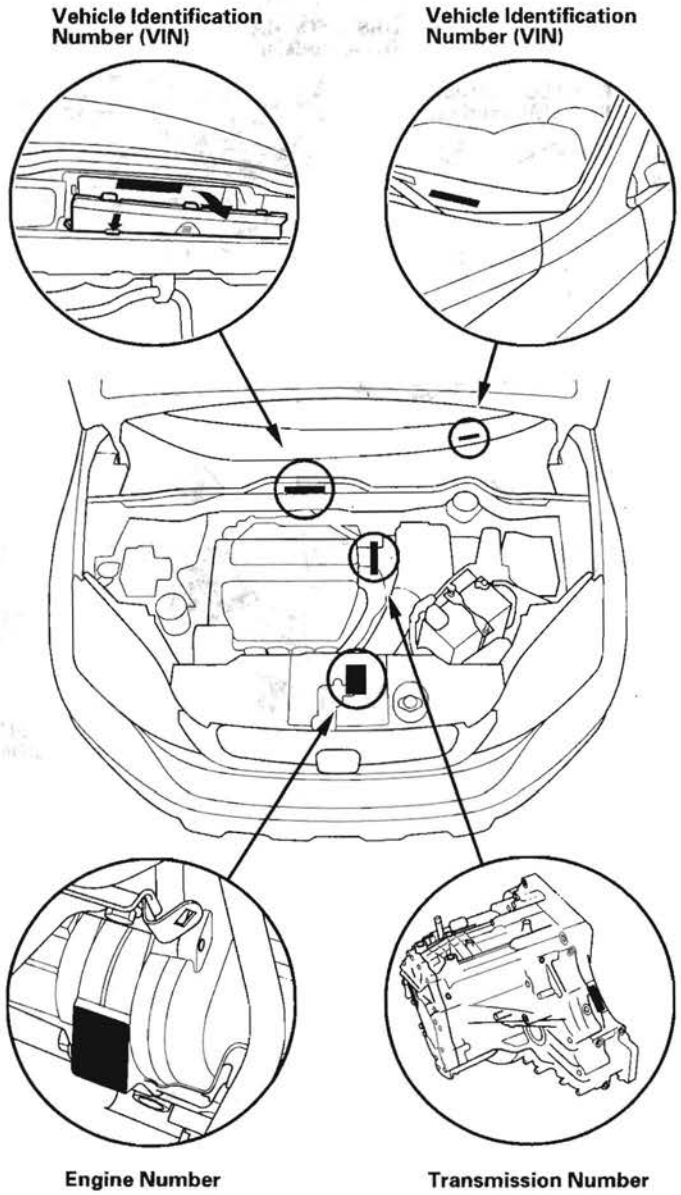

Danger/Warning/Caution Label Locations

Front Passenger's Compartment:

NOTE: FRONT PASSENGER (CHILD SEAT) AIRBAG WARNING TAG is installed on the glove box in the USA models.

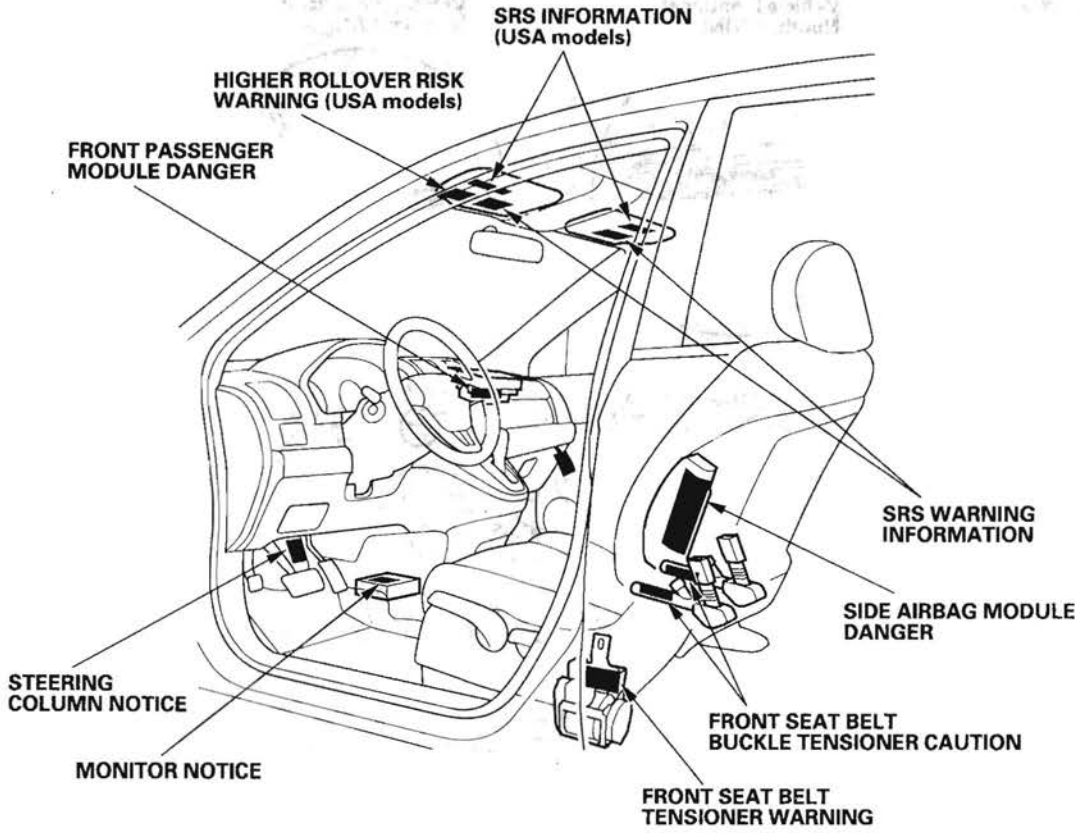

Steering Wheel:

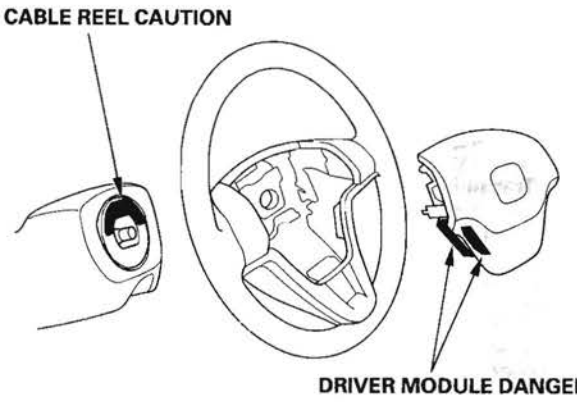

Rear Passenger's Compartment:

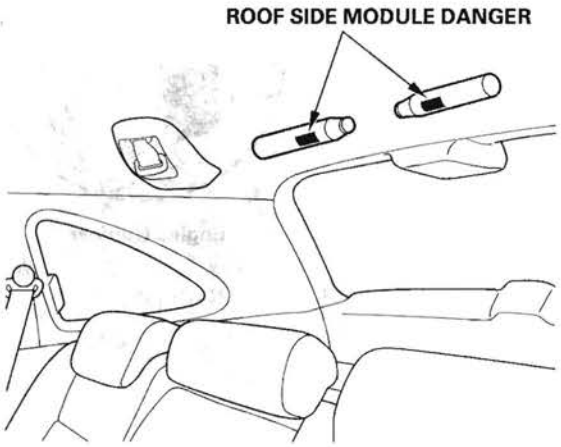

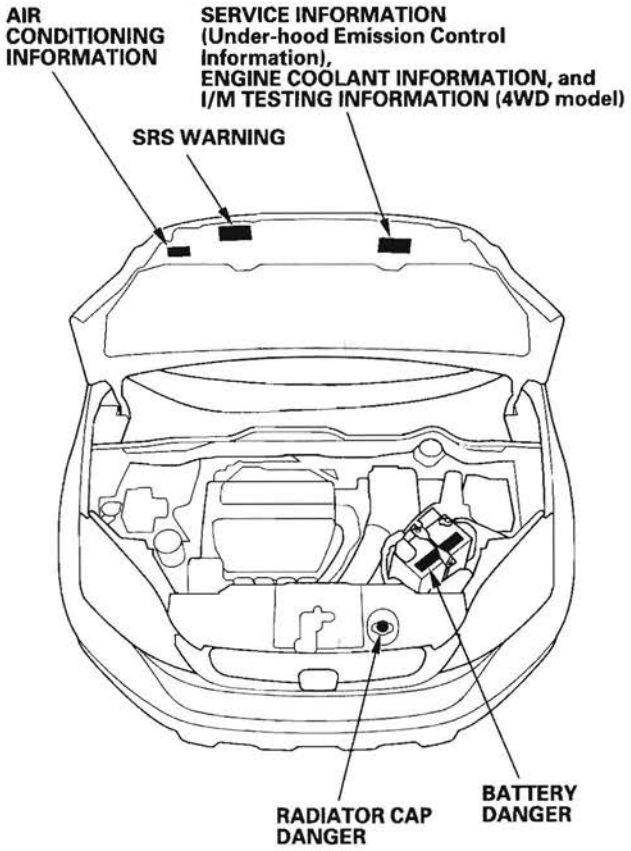
AIR CONDITIONING INFORMATION
SERVICE INFORMATION (Under-hood Emission Control Information), ENGINE COOLANT INFORMATION, and I/M TESTING INFORMATION (4WD model)
SRS WARNING
RADIATOR CAP DANGER
BATTERY DANGER

Doorjamb:

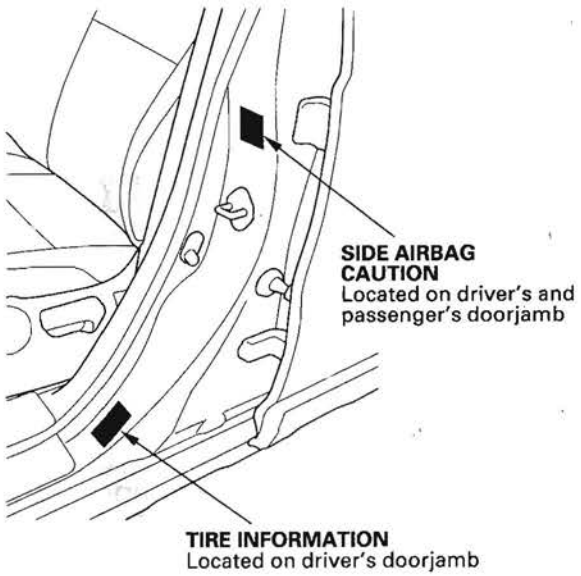
SIDE AIRBAG CAUTION
Located on driver's and passenger's doorjamb
TIRE INFORMATION
Located on driver's doorjamb

Under-hood Emission Control Label

Emission Group Identification

Example:

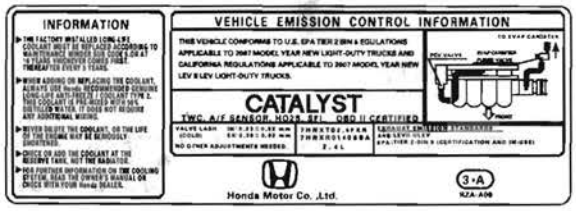

THIS VEHICLE CONFORMS TO U.S. EPA TIER 2 BIN 5 REGULATIONS APPLICABLE TO 2007 MODEL YEAR NEW LIGHT-DUTY TRUCKS AND CALIFORNIA REGULATIONS APPLICABLE TO 2007 MODEL YEAR NEW LEV II ULEV LIGHT-DUTY TRUCKS.

Test Group and Evaporative Family

Test Group:

7 HNX T 02.4 FKR

a b c d e

- **a. Model Year**
  7: '07
- **b. Manufacturer Subcode**
  HNX: HONDA
- **c. Family Type**
  T: LDT
- **d. Displacement Group**
- **e. Sequence Characters**

Evaporative Family:

7 HNX R 0140 BBA

a b c d e

- **a. Model Year**
  7: '07
- **b. Manufacturer Subcode**
  HNX: HONDA
- **c. Family Type**
  R: EVAP/ORVR
- **d. Canister Work Capacity**
- **e. Sequence Characters**

Lift and Support Points

NOTE: If you are going to remove heavy components such as the suspension or the fuel tank from the rear of the vehicle, first support the front of the vehicle with tall safety stands. When substantial weight is removed from the rear of the vehicle, the center of gravity can change, causing the vehicle to tip forward on the lift.

Vehicle Lift

1. Position the lift blocks (A) under the vehicle's front support points (B) and rear support points (C).

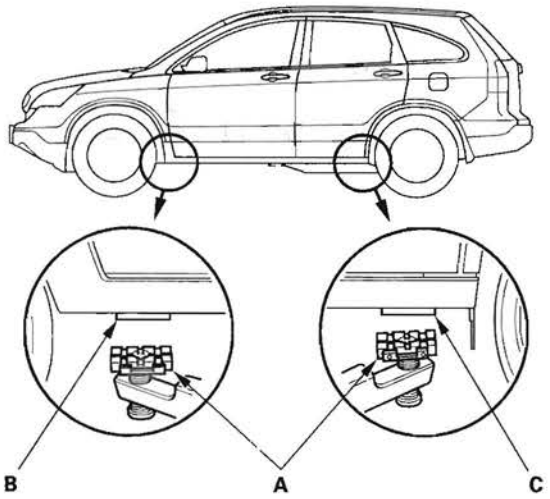

2. Raise the lift a few inches, and rock the vehicle gently to be sure it is firmly supported.

3. Raise the lift to its full height, and inspect the vehicle support points for solid contact with the lift blocks.

Safety Stands

To support the vehicle on safety stands, use the same support points (B and C) as for a vehicle lift. Always use safety stands when working on or under any vehicle that is supported only by a jack.

Floor Jack

1. When lifting the front of the vehicle, set the parking brake. When lifting the rear of the vehicle, put the shift lever in the P position.

2. Block the wheels that are not being lifted.

3. Position the floor jack under the front jacking bracket (A) or the rear jacking bracket (B). Center the jacking bracket on the jack lift platform (C), and jack up the vehicle high enough to fit the safety stands under it.

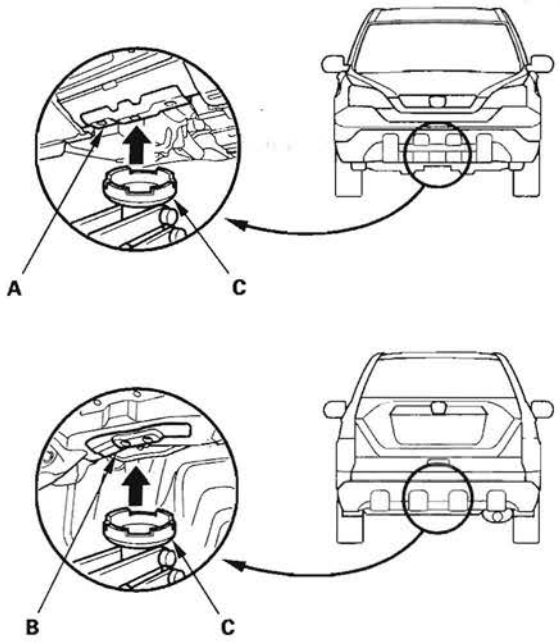

4. Position the safety stands under the support points, and adjust them so the vehicle is level.

5. Lower the vehicle onto the stands.

Towing

If the vehicle needs to be towed, call a professional towing service. Never tow the vehicle behind another vehicle with a rope or chain. It is very dangerous.

Emergency Towing
There are three popular methods of towing a vehicle.

Flat-bed Equipment — The operator loads the vehicle on the back of a truck. **This is the best way of transporting the vehicle.**

To accommodate flat-bed equipment, the vehicle is equipped with front towing hooks (A), front tie down hook slots (B), rear towing hook (C), and rear tie down hook slots (D).

The rear towing hook can be used with a winch to pull the vehicle onto the truck, and the tie down hook slots can be used to secure the vehicle to truck.

Front:

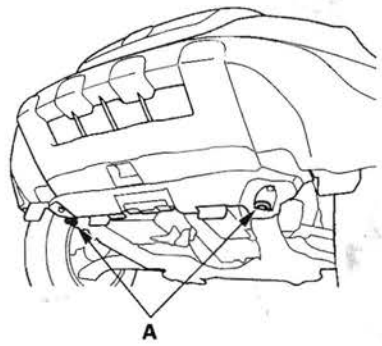

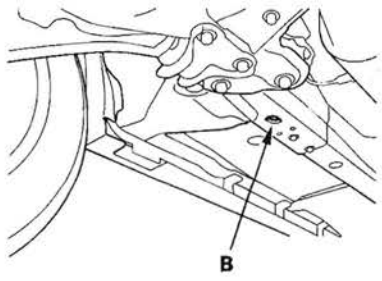

Rear:

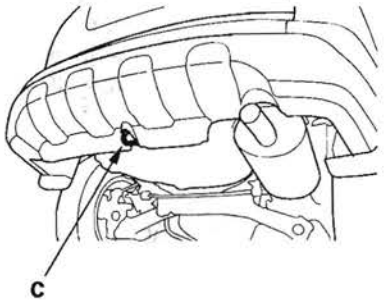

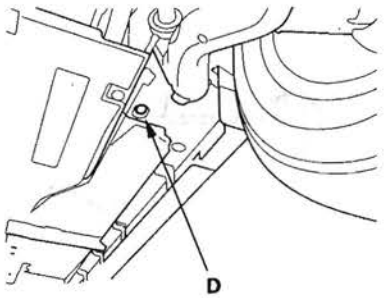

Wheel Lift Equipment — The tow truck uses two pivoting arms that go under the tires (front or rear) and lifts them off the ground. The other two wheels remain on the ground. **Never tow the vehicle with wheel lift equipment.**

Sling-type Equipment — The tow truck uses metal cables with hooks on the ends. These hooks go around parts of the frame or suspension, and the cables lift that end of the vehicle off the ground. The vehicle's suspension and body can be seriously damaged if this method of towing is attempted. **This method of towing the vehicle is unacceptable.**

The only recommended way of towing the CR-V is on a flat-bed truck. Towing the 4WD CR-V with only two wheels on the ground will damage parts of the 4WD system. The 2WD CR-V may also be towed with the front wheels off the ground, or with all four wheels on the ground.

If the 2WD CR-V cannot be transported by a flat-bed, it should be towed with the front wheels off the ground. If the vehicle is damaged, and the vehicle must be towed with the front wheels on the ground, or if the vehicle is towed with all four wheels on the ground, do this.

- Release the parking brake.
- Start the engine.
- Shift to the D position, then to the N position.
- Turn off the engine.
- Leave the ignition switch in the ACCESSORY (I) position so the steering wheel does not lock.
- Make sure all accessories are turned off to minimize battery current draw.

It is best to tow the vehicle no farther than 50 miles (80 km), and keep the speed below 35 mph (55 km/h).

NOTICE

- Improper towing preparation will damage the transmission. Follow the above procedure exactly. If you cannot shift the transmission or start the engine, the vehicle must be transported on a flat-bed.
- Trying to lift or tow the vehicle by the bumpers will cause serious damage. The bumpers are not designed to support the vehicle's weight.

Parts Marking

To deter vehicle theft, certain major components are marked with the vehicle identification number (VIN). Original parts have self-adhesive labels. Replacement body parts have generic self-adhesive labels. These labels should not be removed. The original engine or transmission VIN plates are not transferable to the replacement engine or transmission.

NOTE: Be careful not to damage the parts marking labels during body repair. Mask the labels before repainting the part.

Precautions for Real-time 4WD (Four-wheel Drive)

Under normal conditions, the vehicle is in 2WD (front-wheel drive). However, the system will instantly transmit appropriate driving force to the rear wheels (depending on the driving force of the front wheels and the road conditions).

The Real-time 4WD-Dual Pump System does not have a manual switch to disable the 4WD system. Whenever service work requires spinning the front or rear wheels with the engine, always lift up and support the vehicle so all four wheels are off the ground.

Specifications

Standards and Service Limits

Engine Electrical 2-2
Engine Assembly 2-2
Cylinder Head 2-3
Engine Block 2-4
Engine Lubrication 2-5
Cooling System 2-5
Fuel and Emissions 2-6
Automatic Transmission and A/T Differential 2-7
Rear Differential 2-12
Steering 2-12
Suspension 2-12
Brakes 2-13
Air Conditioning 2-13

Design Specifications

Dimensions 2-14
Weight 2-14
Engine 2-14
Starter 2-14
Automatic Transmission 2-15
Steering 2-15
Suspension 2-15
Tires 2-15
Wheel Alignment 2-15
Brakes 2-15
Air Conditioning 2-16
Electrical Ratings 2-16
Body Specifications 2-17

Standards and Service Limits

Engine Electrical

Item	Measurement	Qualification	Standard or New	Service Limit
Ignition coil	Rated voltage		12 V	
	Firing order		1—3—4—2	
Spark plug	Type		NGK: IZFR6K11 DENSO: SKJ20DR-M11	
	Gap		1.0—1.1 mm (0.039—0.043 in.)	——
Ignition timing	At idle Check the *red* mark	In N or P position	8±2 °BTDC	
Drive belt	Tension		Auto-tensioner	
Alternator	Output	At 13.5 V and normal engine temperature	105 A	
	Coil (rotor) resistance	At 68 °F (20 °C)	2.5 Ω	
	Slip ring O.D.		14.4 mm (0.57 in.)	14.0 mm (0.55 in.)
	Brush length		10.5 mm (0.41 in.)	1.5 mm (0.06 in.)
	Brush spring tension		3.2 N (0.33 kgf, 0.7 lbf)	
Starter	Output		1.6 kW	
	Commutator mica depth		0.40—0.50 mm (0.016—0.020 in.)	0.15 mm (0.006 in.)
	Commutator runout		0.02 mm (0.001 in.) max.	0.05 mm (0.002 in.)
	Commutator O.D.		28.0—28.1 mm (1.102—1.106 in.)	27.5 mm (1.083 in.)
	Brush length		11.1—11.5 mm (0.44—0.45 in.)	4.3 mm (0.17 in.)

Engine Assembly

Item	Measurement	Qualification	Standard or New
Compression	Pressure	Minimum	930 kPa (9.5 kgf/cm², 135 psi)
	Check with the starter cranking the engine	Maximum variation	200 kPa (2.0 kgf/cm², 28 psi)

Cylinder Head

Item	Measurement	Qualification	Standard or New	Service Limit
Head	Warpage		—	0.05 mm (0.002 in.)
	Height		103.95—104.05 mm (4.093—4.096 in.)	—
Camshaft	End play		0.05—0.20 mm (0.002—0.008 in.)	0.4 mm (0.02 in.)
	Camshaft-to-holder oil clearance	No. 1 journal	0.030—0.069 mm (0.001—0.003 in.)	0.15 mm (0.006 in.)
		No. 2, 3, 4, 5 journals	0.060—0.099 mm (0.002—0.004 in.)	0.15 mm (0.006 in.)
	Total runout		0.03 mm (0.001 in.) max.	0.04 mm (0.002 in.)
	Cam lobe height	Intake, primary	34.263 mm (1.3489 in.)	—
		Intake, secondary	29.638 mm (1.1668 in.)	—
		Exhaust	34.092 mm (1.3422 in.)	—
Valve	Clearance (cold)	Intake	0.21—0.25 mm (0.008—0.010 in.)	—
		Exhaust	0.28—0.32 mm (0.011—0.013 in.)	—
	Stem O.D.	Intake	5.475—5.485 mm (0.2156—0.2159 in.)	5.445 mm (0.214 in.)
		Exhaust	5.450—5.460 mm (0.2146—0.2150 in.)	5.42 mm (0.213 in.)
	Stem-to-guide clearance	Intake	0.030—0.055 mm (0.0012—0.0022 in.)	0.08 mm (0.003 in.)
		Exhaust	0.055—0.080 mm (0.0022—0.0031 in.)	0.11 mm (0.004 in.)
Valve seat	Width	Intake	1.25—1.55 mm (0.049—0.061 in.)	2.00 mm (0.079 in.)
		Exhaust	1.25—1.55 mm (0.049—0.061 in.)	2.00 mm (0.079 in.)
	Stem installed height	Intake	44.0—44.5 mm (1.73—1.75 in.)	44.7 mm (1.76 in.)
		Exhaust	44.1—44.6 mm (1.74—1.76 in.)	44.8 mm (1.76 in.)
Valve spring	Free length	Intake	47.57 mm (1.873 in.) 47.58 mm (1.873 in.)	—
		Exhaust	49.64 mm (1.954 in.) 49.63 mm (1.954 in.)	—
Valve guide	I.D.	Intake	5.515—5.530 mm (0.2171—0.2177 in.)	5.55 mm (0.219 in.)
		Exhaust	5.515—5.530 mm (0.2171—0.2177 in.)	5.55 mm (0.219 in.)
	Installed height	Intake	15.2—16.2 mm (0.598—0.638 in.)	—
		Exhaust	15.5—16.5 mm (0.610—0.650 in.)	—
Rocker arm	Arm-to-shaft clearance	Intake	0.025—0.052 mm (0.0010—0.0020 in.)	0.08 mm (0.003 in.)
		Exhaust	0.018—0.056 mm (0.0007—0.0022 in.)	0.08 mm (0.003 in.)

Standards and Service Limits

Engine Block

Item	Measurement	Qualification	Standard or New	Service Limit
Block	Warpage of deck		0.07 mm (0.003 in.) max.	0.10 mm (0.004 in.)
	Bore diameter	A or I	87.010—87.020 mm (3.4256—3.4260 in.)	87.070 mm (3.4279 in.)
		B or II	87.000—87.010 mm (3.4252—3.4256 in.)	87.070 mm (3.4279 in.)
	Bore taper		———	0.05 mm (0.002 in.)
	Reboring limit		———	0.25 mm (0.01 in.)
Piston	Skirt O.D. at 13 mm (0.5 in.) from bottom of skirt	No letter or A	86.980—86.990 mm (3.4244—3.4248 in.)	86.930 mm (3.4224 in.)
		Letter B	86.970—86.980 mm (3.4240—3.4244 in.)	86.920 mm (3.4220 in.)
	Clearance in cylinder		0.020—0.040 mm (0.0008—0.0016 in.)	0.05 mm (0.002 in.)
	Ring groove width	Top	1.230—1.240 mm (0.0484—0.0488 in.)	1.26 mm (0.0450 in.)
		Second	1.240—1.250 mm (0.0488—0.0492 in.)	1.270 mm (0.050 in.)
		Oil	2.005—2.025 mm (0.0789—0.0797 in.)	2.05 mm (0.081 in.)
Piston ring	Ring-to-groove clearance	Top	0.035—0.060 mm (0.0014—0.0024 in.)	0.13 mm (0.005 in.)
		Second	0.030—0.055 mm (0.0012—0.0022 in.)	0.13 mm (0.005 in.)
	Ring end gap	Top	0.20—0.35 mm (0.008—0.014 in.)	0.60 mm (0.024 in.)
		Second	0.40—0.55 mm (0.016—0.022 in.)	0.70 mm (0.028 in.)
		Oil	0.25—0.65 mm (0.010—0.026 in.)	0.75 mm (0.030 in.)
Piston pin	O.D.		21.961—21.965 mm (0.8646—0.8648 in.)	21.953 mm (0.8643 in.)
	Pin-to-piston clearance		−0.005 to +0.002 mm (−0.00020 to +0.00008 in.)	0.005 mm (0.0002 in.)
Connecting rod	Pin-to-rod clearance		0.005—0.015 mm (0.0002—0.0006 in.)	0.02 mm (0.0008 in.)
	Small-end bore diameter		21.970—21.976 mm (0.8650—0.8652 in.)	———
	Large-end bore diameter		51.0 mm (2.01 in.)	———
	End play installed on crankshaft		0.15—0.30 mm (0.006—0.012 in.)	0.40 mm (0.016 in.)
Crankshaft	Main journal diameter	No. 1 journal No. 2 journal No. 4 journal No. 5 journal	54.984—55.008 mm (2.1648—2.1657 in.)	———
		No. 3 journal	54.976—55.000 mm (2.1644—2.1654 in.)	———
	Rod journal diameter		47.976—48.000 mm (1.8888—1.8898 in.)	———
	Rod/main journal taper		0.005 mm (0.0002 in.) max.	0.010 mm (0.0004 in.)
	Rod/main journal out-of-round		0.005 mm (0.0002 in.) max.	0.010 mm (0.0004 in.)
	End play		0.10—0.35 mm (0.004—0.014 in.)	0.45 mm (0.018 in.)
	Runout		0.03 mm (0.0012 in.) max.	0.04 mm (0.0016 in.)
Crankshaft bearing	Main bearing-to-journal oil clearance	No. 1 journal No. 2 journal No. 4 journal No. 5 journal	0.017—0.041 mm (0.0007—0.0016 in.)	0.050 mm (0.0020 in.)
		No. 3 journal	0.025—0.049 mm (0.0010—0.0019 in.)	0.055 mm (0.0022 in.)
	Rod bearing clearance		0.020—0.050 mm (0.0008—0.0020 in.)	0.060 mm (0.0024 in.)

Engine Lubrication

Item	Measurement	Qualification	Standard or New	Service Limit
Engine oil	Capacity	Engine overhaul	5.3 L (5.6 US qt)	
		Oil change including filter	4.2 L (4.4 US qt)	
		Oil change without filter	4.0 L (4.2 US qt)	
Oil pump	Inner-to-outer rotor clearance		0.06—0.16 mm (0.002—0.006 in.)	0.20 mm (0.008 in.)
	Pump housing-to-outer rotor clearance		0.15—0.21 mm (0.006—0.008 in.)	0.23 mm (0.009 in.)
	Pump housing-to-rotor axial clearance		0.035—0.070 mm (0.0014—0.0028 in.)	0.12 mm (0.005 in.)
	Balancer shafts, journal diameter	No. 1 journal, front shaft	19.938—19.950 mm (0.7850—0.7854 in.)	19.92 mm (0.784 in.)
		No. 1 journal, rear shaft	23.938—23.950 mm (0.9424—0.9429 in.)	23.92 mm (0.942 in.)
		No. 2 journal, front and rear shafts	32.949—32.961 mm (1.2972—1.2977 in.)	32.93 mm (1.296 in.)
	Balancer shafts, journal taper		0.005 mm (0.0002 in.) max.	———
	Balancer shafts, end play	Front	0.063—0.108 mm (0.0025—0.0043 in.)	0.14 mm (0.0055 in.)
		Rear	0.063—0.108 mm (0.0025—0.0043 in.)	0.14 mm (0.0055 in.)
	Balancer shafts, shaft-to-bearing clearance	No. 1 journal, front shaft	0.050—0.082 mm (0.0020—0.0032 in.)	0.10 mm (0.004 in.)
		No. 1 journal, rear shaft	0.050—0.082 mm (0.0020—0.0032 in.)	0.10 mm (0.004 in.)
		No. 2 journal, front and rear shafts	0.060—0.120 mm (0.0024—0.0047 in.)	0.15 mm (0.006 in.)
	Balancer shaft bearings, I.D.	No. 1 journal, front shaft	20.000—20.020 mm (0.7874—0.7882 in.)	20.03 mm (0.789 in.)
		No. 1 journal, rear shaft	24.000—24.020 mm (0.9449—0.9457 in.)	24.03 mm (0.946 in.)
		No. 2 journal, front and rear shafts	33.021—33.069 mm (1.3000—1.3019 in.)	33.09 mm (1.303 in.)
	Relief valve, oil pressure with oil temperature at 176 °F (80 °C)	At idle	70 kPa (0.7 kgf/cm², 10 psi) min.	
		At 3,000 rpm	300 kPa (3.1 kgf/cm², 44 psi) min.	

Cooling System

Item	Measurement	Qualification	Standard or New
Radiator	Coolant capacities (including engine, heater, hoses, and reservoir) Use Honda Long Life Antifreeze/ Coolant Type 2	Engine overhaul	7.1 L (1.88 US gal)
		Coolant change	5.0 L (1.32 US gal)
Coolant reservoir	Coolant capacity		0.6 L (0.16 US gal)
Radiator cap	Opening pressure		93—123 kPa (0.95—1.25 kgf/cm², 14—18 psi)
Thermostat	Opening temperature	Begins to open	169—176 °F (76—80 °C)
		Fully open	194 °F (90 °C)
	Valve lift at fully open		8.0 mm (0.31 in.) min.

Standards and Service Limits

Fuel and Emissions

Item	Measurement	Qualification	Standard or New
Fuel pressure regulator	Pressure with fuel pressure gauge connected		320—370 kPa (3.3—3.8 kgf/cm^2, 47—54 psi)
Fuel tank	Capacity		58.0 L (15.3 US gal)
Engine idle	Idle speed without load	In N or P position	650±50 rpm
	Idle speed with high electrical load (A/C switch ON, temperature set to max cool, blower fan on High, rear window defogger ON, and headlights on high beam)	In N or P position	700±50 rpm

Automatic Transmission and A/T Differential

Item	Measurement	Qualification	Standard or New	Service Limit
Automatic transmission fluid	Capacity Use Honda ATF-Z1	4WD at fluid change	2.5 L (2.6 US qt)	
		4WD at overhaul	7.2 L (7.6 US qt)	
		2WD at fluid change	2.6 L (2.7 US qt)	
		2WD at overhaul	7.0 L (7.4 US qt)	
ATF pressure	Line pressure	At 2,000 rpm in N or P position	930—980 kPa (9.5—10.0 kgf/cm², 140—142 psi)	840 kPa (8.6 kgf/cm², 120 psi)
	1st clutch pressure	At 2,000 rpm in 1 position	930—980 kPa (9.5—10.0 kgf/cm², 140—142 psi)	840 kPa (8.6 kgf/cm², 120 psi)
	2nd clutch pressure	At 2,000 rpm in 2 position	930—980 kPa (9.5—10.0 kgf/cm², 140—142 psi)	840 kPa (8.6 kgf/cm², 120 psi)
	3rd clutch pressure	At 2,000 rpm in 3rd gear in D position	930—980 kPa (9.5—10.0 kgf/cm², 140—142 psi)	840 kPa (8.6 kgf/cm², 120 psi)
	4th clutch pressure	At 2,000 rpm in 4th gear in D position	930—980 kPa (9.5—10.0 kgf/cm², 140—142 psi)	840 kPa (8.6 kgf/cm², 120 psi)
	5th clutch pressure	At 2,000 rpm in 5th gear in D position	930—980 kPa (9.5—10.0 kgf/cm², 140—142 psi)	840 kPa (8.6 kgf/cm², 120 psi)
Torque converter	Stall speed Check with vehicle on level ground		2,445 rpm	2,295—2,595 rpm
Clutch	Clutch end plate-to-top disc clearance	1st	———	1.38—1.58 mm (0.054—0.062 in.)
		2nd	———	1.18—1.38 mm (0.046—0.054 in.)
		3rd	———	1.23—1.43 mm (0.048—0.056 in.)
		4th and 5th	———	0.93—1.13 mm (0.037—0.044 in.)
	Clutch return spring free length	1st, 2nd, and 3rd	50.8 mm (2.00 in.)	48.8 mm (1.92 in.)
		4th and 5th	33.5 mm (1.32 in.)	31.5 mm (1.24 in.)
	Clutch disc thickness		1.94 mm (0.076 in.)	———
	Clutch plate thickness	1st and 3rd	1.6 mm (0.063 in.)	When discolored
		2nd	2.0 mm (0.079 in.)	When discolored
		4th and 5th	2.0 mm (0.079 in.)	When discolored
	Clutch waved-plate phase difference	1st	0.15—0.25 mm <2PLCS> (0.006—0.010 in.) 0.01—0.25 mm <1PLC> (0.0004—0.010 in.)	0.05 mm (0.002 in.) <2PLCS>
		2nd, 3rd, 4th, and 5th	0.10—0.20 mm <2PLCS> (0.004—0.008 in.) 0.01—0.20 mm <1PLC> (0.004—0.010 in.)	
	1st and 2nd clutch end plate thickness	Mark 1	2.6 mm (0.102 in.)	When discolored
		Mark 2	2.7 mm (0.106 in.)	When discolored
		Mark 3	2.8 mm (0.110 in.)	When discolored
		Mark 4	2.9 mm (0.114 in.)	When discolored
		Mark 5	3.0 mm (0.118 in.)	When discolored
		Mark 6	3.1 mm (0.122 in.)	When discolored
		Mark 7	3.2 mm (0.126 in.)	When discolored
		Mark 8	3.3 mm (0.130 in.)	When discolored
		Mark 9	3.4 mm (0.134 in.)	When discolored

(cont'd)

Standards and Service Limits

Automatic Transmission and A/T Differential (cont'd)

Item	Measurement	Qualification	Standard or New	Service Limit
Clutch (cont'd)	3rd, 4th and 5th clutch end plate thickness	Mark 1	2.1 mm (0.083 in.)	When discolored
		Mark 2	2.2 mm (0.087 in.)	When discolored
		Mark 3	2.3 mm (0.091 in.)	When discolored
		Mark 4	2.4 mm (0.095 in.)	When discolored
		Mark 5	2.5 mm (0.098 in.)	When discolored
		Mark 6	2.6 mm (0.102 in.)	When discolored
		Mark 7	2.7 mm (0.106 in.)	When discolored
		Mark 8	2.8 mm (0.110 in.)	When discolored
		Mark 9	2.9 mm (0.114 in.)	When discolored
Mainshaft	Diameter of needle bearing contact area	At stator shaft	22.984—23.000 mm (0.905—0.906 in.)	When worn or damaged
		At 5th gear	51.975—51.991 mm (2.046—2.047 in.)	When worn or damaged
		At 4th gear collar	33.975—33.991 mm (1.3376—1.3382 in.)	When worn or damaged
	I.D. of gears	5th gear	57.000—57.019 mm (2.2441—2.2448 in.)	When worn or damaged
		4th gear	40.000—40.016 mm (1.5748—1.5754 in.)	When worn or damaged
	End play of gears	5th gear	0.04—0.10 mm (0.0016—0.004 in.)	———
		4th gear	0.1—0.22 mm (0.004—0.009 in.)	———
	41 x 68 mm thrust washer thickness	No. 1	4.450 mm (0.1752 in.)	When worn or damaged
		No. 2	4.475 mm (0.1762 in.)	When worn or damaged
		No. 3	4.500 mm (0.1772 in.)	When worn or damaged
		No. 4	4.525 mm (0.1781 in.)	When worn or damaged
		No. 5	4.550 mm (0.1791 in.)	When worn or damaged
		No. 6	4.575 mm (0.1801 in.)	When worn or damaged
		No. 7	4.600 mm (0.1811 in.)	When worn or damaged
		No. 8	4.625 mm (0.1821 in.)	When worn or damaged
		No. 9	4.650 mm (0.1831 in.)	When worn or damaged
		No. 10	4.675 mm (0.1841 in.)	When worn or damaged
		No. 11	4.700 mm (0.1850 in.)	When worn or damaged
		No. 12	4.725 mm (0.1860 in.)	When worn or damaged
		No. 13	4.750 mm (0.1870 in.)	When worn or damaged
		No. 14	4.775 mm (0.1880 in.)	When worn or damaged
		No. 15	4.800 mm (0.1890 in.)	When worn or damaged
	4th gear collar length		66.3—66.4 mm (2.610—2.614 in.)	———
	Length of 4th gear collar flange from end		19.15—19.30 mm (0.754—0.760 in.)	When worn or damaged
	Sealing ring thickness		1.91—1.97 mm (0.0752—0.0776 in.)	1.86 mm (0.0732 in.)
	Width of sealing ring groove		2.025—2.060 mm (0.0797—0.0811 in.)	2.080 mm (0.0819 in.)
	Clutch feed pipe O.D.		7.97—7.98 mm (0.3138—0.3142 in.)	7.95 mm (0.313 in.)
	Clutch feed pipe bushing I.D.		8.000—8.015 mm (0.3150—0.3156 in.)	8.030 mm (0.3161 in.)
Countershaft	Diameter of needle bearing contact area	At torque converter housing	36.005—36.015 mm (1.4175—1.4179 in.)	When worn or damaged
		At 4th gear	34.982—34.998 mm (1.3772—1.3779 in.)	When worn or damaged
		At reverse gear	39.979—40.000 mm (1.5740—1.5748 in.)	When worn or damaged
	I.D. of gears	4th gear	41.000—41.016 mm (1.6142—1.6148 in.)	When worn or damaged
		Reverse gear	46.000—46.016 mm (1.8110—1.8116 in.)	When worn or damaged
	End play of gears	5th gear	0.00—0.48 mm (0.000—0.019 in.)	———
		4th gear	0.04—0.27 mm (0.002—0.0106 in.)	———
		Reverse gear	0.10—0.25 mm (0.004—0.010 in.)	———
	Collar, 35 x 47 x 7.8 mm thickness		7.8 mm (0.31 in.)	———
	Collar, 37 x 41 x 54.3 mm length		54.25—54.3 mm (2.1358—2.1378 in.)	———
	Reverse selector hub width		25.45—25.65 mm (1.002—1.010 in.)	———
	Reverse selector hub O.D.		55.87—55.90 mm (2.200—2.201 in.)	When worn or damaged

Item	Measurement	Qualification	Standard or New	Service Limit
Secondary shaft	Diameter of needle bearing contact area	At 1st gear	39.986—39.999 mm (1.5742—1.5748 in.)	When worn or damaged
		At 2nd gear	39.986—39.999 mm (1.5742—1.5748 in.)	When worn or damaged
		At 3rd gear collar	36.975—36.991 mm (1.4557—1.4563 in.)	When worn or damaged
	I.D. of gears	1st gear	47.000—47.016 mm (1.8504—1.8510 in.)	When worn or damaged
		2nd gear	46.000—46.016 mm (1.8110—1.8116 in.)	When worn or damaged
		3rd gear	43.000—43.016 mm (1.6929—1.6935 in.)	When worn or damaged
	End play of gears	1st gear	0.04—0.12 mm (0.002—0.005 in.)	———
		2nd gear	0.04—0.12 mm (0.002—0.005 in.)	———
		3rd gear	0.10—0.22 mm (0.004—0.009 in.)	———
	37 x 58 mm thrust washer thickness	No. 1	3.900 mm (0.154 in.)	When worn or damaged
		No. 2	3.925 mm (0.155 in.)	When worn or damaged
		No. 3	3.950 mm (0.156 in.)	When worn or damaged
		No. 4	3.975 mm (0.156 in.)	When worn or damaged
		No. 5	4.000 mm (0.157 in.)	When worn or damaged
		No. 6	4.025 mm (0.158 in.)	When worn or damaged
		No. 7	4.050 mm (0.159 in.)	When worn or damaged
		No. 8	4.075 mm (0.160 in.)	When worn or damaged
		No. 9	4.100 mm (0.161 in.)	When worn or damaged
		No. 10	4.125 mm (0.162 in.)	When worn or damaged
		No. 11	4.150 mm (0.163 in.)	When worn or damaged
		No. 12	4.175 mm (0.164 in.)	When worn or damaged
		No. 13	4.200 mm (0.165 in.)	When worn or damaged
		No. 14	4.225 mm (0.166 in.)	When worn or damaged
		No. 15	4.250 mm (0.167 in.)	When worn or damaged
		No. 16	4.275 mm (0.168 in.)	When worn or damaged
		No. 17	4.300 mm (0.169 in.)	When worn or damaged
		No. 18	4.325 mm (0.170 in.)	When worn or damaged
		No. 19	4.350 mm (0.171 in.)	When worn or damaged
		No. 20	4.375 mm (0.172 in.)	When worn or damaged
	40 x 51.5 mm thrust washer thickness	No. 1	4.80 mm (0.189 in.)	When worn or damaged
		No. 2	4.85 mm (0.191 in.)	When worn or damaged
		No. 3	4.90 mm (0.193 in.)	When worn or damaged
		No. 4	4.95 mm (0.195 in.)	When worn or damaged
		No. 5	5.00 mm (0.197 in.)	When worn or damaged
		No. 6	5.05 mm (0.199 in.)	When worn or damaged
	3rd gear collar length		43.9—44.0 mm (1.728—1.732 in.)	———
	Length of 3rd gear collar flange from end		5.25—5.40 mm (0.207—0.213 in.)	When worn or damaged
	Sealing ring thickness		1.91—1.97 mm (0.0752—0.0776 in.)	1.86 mm (0.0732 in.)
	Width of sealing ring groove		2.025—2.060 mm (0.0797—0.0811 in.)	2.080 mm (0.0819 in.)
	Clutch feed pipe O.D.	3rd clutch feed pipe	11.47—11.48 mm (0.4516—0.4520 in.)	11.45 mm (0.4508 in.)
		1st clutch feed pipe	6.97—6.98 mm (0.2744—0.2748 in.)	6.95 mm (0.2736 in.)
	Clutch feed pipe bushing I.D.	3rd clutch feed pipe	11.500—11.518 mm (0.4528—0.4553 in.)	11.530 mm (0.4539 in.)
		1st clutch feed pipe	7.018—7.030 mm (0.2763—0.2768 in.)	7.045 mm (0.2774 in.)
	ATF guide collar of sealing ring contact I.D.		29.000—29.021 mm (1.1417—1.1426 in.)	29.05 mm (1.144 in.)

(cont'd)

Standards and Service Limits

Automatic Transmission and A/T Differential (cont'd)

Item	Measurement	Qualification	Standard or New	Service Limit
Idler gear shaft	Diameter of needle bearing contact area	End cover side	32.003—32.013 mm (1.2600—1.2604 in.)	When worn or damaged
	Thickness of cotters		1.39—1.42 mm (0.0547—0.0559 in.)	———
Reverse idler gear	Reverse idler gear shaft diameter at needle bearing contact area		14.99—15.00 mm (0.5902—0.5906 in.)	When worn or damaged
	I.D.		20.007—20.020 mm (0.7877—0.7882 in.)	When worn or damaged
	I.D. of reverse idler gear shaft contact area on transmission housing		14.800—14.818 mm (0.5827—0.5834 in.)	———
	I.D. of reverse idler gear shaft holder		14.800—14.824 mm (0.5827—0.5836 in.)	When worn or damaged
ATF pump	ATF pump thrust clearance		0.03—0.06 mm (0.001—0.002 in.)	0.07 mm (0.003 in.)
	ATF pump gear-to-body clearance	Drive gear	0.210—0.265 mm (0.008—0.010 in.)	———
		Driven gear	0.070—0.125 mm (0.003—0.005 in.)	———
	ATF pump driven gear I.D.		14.016—14.034 mm (0.5518—0.5525 in.)	When worn or damaged
	ATF pump driven gear shaft O.D.		13.980—13.990 mm (0.5504—0.5508 in.)	When worn or damaged
Stator shaft	Needle bearing contact I.D.	Torque converter side	27.000—27.021 mm (1.063—1.064 in.)	When worn or damaged
		ATF pump side	29.000—29.021 mm (1.1417—1.1426 in.)	———
	Sealing ring contact area I.D.		29.000—29.021 mm (1.1417—1.1426 in.)	29.05 mm (1.144 in.)
Reverse shift fork	Fork finger thickness		5.90—6.00 mm (0.232—0.236 in.)	5.40 mm (0.213 in.)
Park gear and pawl	———		———	When worn or damaged
Servo body	Shift fork shaft bore I.D.		14.000—14.010 mm (0.5512—0.5516 in.)	———
	Shift fork shaft valve bore I.D.		37.000—37.039 mm (1.4567—1.4582 in.)	37.045 mm (1.4585 in.)
Regulator valve body	Sealing ring contact I.D.		29.000—29.021 mm (1.1417—1.1426 in.)	29.05 mm (1.144 in.)

Item	Measurement	Qualification	Standard or New			
			Wire Diameter	O.D.	Free Length	No. of Coil
Main valve body spring (see page 14-339)	Shift valve A spring		0.8 mm (0.031 in.)	5.6 mm (0.220 in.)	28.1 mm (1.106 in.)	15.9
	Shift valve B spring		0.8 mm (0.031 in.)	5.6 mm (0.220 in.)	28.1 mm (1.106 in.)	15.9
	Shift valve C spring		0.8 mm (0.031 in.)	5.6 mm (0.220 in.)	28.1 mm (1.106 in.)	15.9
	Relief valve spring		1.0 mm (0.039 in.)	9.6 mm (0.378 in.)	34.1 mm (1.343 in.)	10.2
	Lock-up control valve spring		0.65 mm (0.026 in.)	7.1 mm (0.280 in.)	23.1 mm (0.909 in.)	12.7
	Cooler check valve spring		0.85 mm (0.033 in.)	6.6 mm (0.260 in.)	27.0 mm (1.063 in.)	11.3
	Servo control valve spring		0.7 mm (0.028 in.)	6.6 mm (0.260 in.)	35.7 mm (1.406 in.)	17.2
	Shift valve E spring		0.8 mm (0.031 in.)	5.6 mm (0.220 in.)	28.1 mm (1.106 in.)	15.9

Item	Measurement	Qualification	Standard or New			
			Wire Diameter	O.D.	Free Length	No. of Coil
Regulator valve body spring (see page 14-341)	Stator reaction spring		4.5 mm (0.177 in.)	35.4 mm (1.394 in.)	30.3 mm (1.193 in.)	1.92
	Regulator valve spring A		1.85 mm (0.073 in.)	14.7 mm (0.579 in.)	83.0 mm (3.268 in.)	16.9
	Regulator valve spring B		1.6 mm (0.063 in.)	9.2 mm (0.362 in.)	44.0 mm (1.732 in.)	12.5
	Torque converter check valve spring		1.2 mm (0.047 in.)	8.6 mm (0.339 in.)	33.8 mm (1.331 in.)	12.2
	Lock-up shift valve spring		1.0 mm (0.039 in.)	6.6 mm (0.260 in.)	35.5 mm (1.398 in.)	18.2
	3rd accumulator spring		2.5 mm (0.098 in.)	14.6 mm (0.575 in.)	29.4 mm (1.157 in.)	4.9
	1st accumulator spring A		2.4 mm (0.094 in.)	18.6 mm (0.732 in.)	49.0 mm (1.929 in.)	7.1
	1st accumulator spring B		2.3 mm (0.091 in.)	12.2 mm (0.480 in.)	31.5 mm (1.240 in.)	6.6
Servo body spring (see page 14-342)	Shift valve D spring		0.8 mm (0.031 in.)	5.6 mm (0.220 in.)	28.1 mm (1.106 in.)	15.9
	4th accumulator spring B		2.3 mm (0.091 in.)	12.2 mm (0.480 in.)	31.5 mm (1.240 in.)	6.6
	4th accumulator spring A		2.4 mm (0.094 in.)	18.6 mm (0.732 in.)	49.0 mm (1.929 in.)	7.1
	2nd accumulator spring B		2.1 mm (0.083 in.)	10.8 mm (0.425 in.)	34.0 mm (1.339 in.)	8.2
	2nd accumulator spring A		2.1 mm (0.083 in.)	16.6 mm (0.654 in.)	48.7 mm (1.917 in.)	8.4
	5th accumulator spring		2.5 mm (0.098 in.)	14.6 mm (0.575 in.)	29.9 mm (1.177 in.)	4.9

Item	Measurement	Qualification	Standard or New	Service Limit
A/T differential carrier	Pinion shaft contact area F.W.		12.000—12.080 mm (0.473—0.476 in.)	——
	Carrier-to-pinion shaft clearance		0.017—0.109 mm (0.001—0.004 in.)	——
	Driveshaft contact area I.D.		28.015—28.045 mm (1.103—1.104 in.)	——
	Carrier-to-driveshaft clearance		0.035—0.086 mm (0.002—0.003 in.)	0.12 mm (0.005 in.)
	Carrier bearing starting torque (preload)	For new bearing	2.7—3.9 N·m (28—40 kgf·cm, 24—35 lbf·in.)	Adjust
		For used bearing	2.5—3.6 N·m (25—37 kgf·cm, 22—32 lbf·in.)	Adjust
	Final driven gear backlash		0.086—0.142 mm (0.0034—0.0056 in.)	0.2 mm (0.008 in.)
A/T differential pinion gear	Backlash		0.05—0.15 mm (0.002—0.006 in.)	——
	I.D.		18.042—18.066 mm (0.7103—0.7113 in.)	——
	Pinion gear-to-pinion shaft clearance		0.055—0.095 mm (0.0022—0.0037 in.)	0.12 mm (0.005 in.)

(cont'd)

Standards and Service Limits

Automatic Transmission and A/T Differential (cont'd)

Item	Measurement	Qualification	Standard or New	Service Limit
Transfer assembly	Diameter of transfer shaft on bearing contact area	At roller bearing	38.485—38.500 mm (1.5152—1.5157 in.)	38.43 mm (1.513 in.)
		At tapered roller bearing	24.975—24.990 mm (0.9833—0.9839 in.)	24.92 mm (0.9811 in.)
	Transfer drive gear diameter	At tapered roller bearing	40.002—40.018 mm (1.5749—1.5755 in.)	38.95 mm (1.533 in.)
	Diameter of transfer driven gear on tapered roller bearing contact area	At driven gear side	35.002—35.018 mm (1.3780—1.3787 in.)	34.95 mm (1.376 in.)
		At shaft splines side	26.975—26.988 mm (1.0620—1.0625 in.)	26.92 mm (1.060 in.)
	Transfer gear backlash		0.06—0.16 mm (0.002—0.006 in.)	Adjust
	Total starting torque (preload)		2.44—3.87 N·m (24.8—39.4 kgf·cm, 21.5—34.1 lbf·in.)	Adjust

Rear Differential

Item	Measurement	Qualification	Standard or New
Differential fluid	Capacity	Fluid change	1.2 L (1.3 US qt)
	Use Honda Dual Pump Fluid	Overhaul	1.4 L (1.5 US qt)

Steering

Item	Measurement	Qualification	Standard or New
Steering wheel	Rotational play measured at outside edge with engine running		0—10 mm (0—0.39 in.)
	Starting load measured at outside edge with engine running		34 N (3.5 kgf, 7.7 lbf)
Gearbox	Angle of rack guide screw loosened from locked position		10 °±5 °
Pump	Output pressure with shut-off valve closed		7,350—8,050 kPa (75—82 kgf/cm², 1,070—1,170 psi)
Power steering fluid	Capacity Use Honda Power Steering Fluid	Reservoir capacity	0.29 L (0.31 US qt)
		System overhaul	0.99 L (1.05 US qt)

Suspension

Item	Measurement	Qualification	Standard or New	Service Limit
Wheel alignment	Camber	Front	0 °00 ' ±30 '	
		Rear	−1 °00 ' ±45 '	
	Caster	Front	3 °02 ' ±1 °	
	Total toe-in	Front	0±2 mm (0±0.08 in.)	
		Rear	2^{+2}_{-1} mm ($0.08^{+0.08}_{-0.04}$ in.)	
	Front wheel turning angle	Inward	36 °29 ' ±2 °	
		Outward	31 °14 ' (Reference)	
Wheel	Aluminum wheel runout	Axial	0—0.7 mm (0—0.03 in.)	2.0 mm (0.08 in.)
		Radial	0—0.7 mm (0—0.03 in.)	1.5 mm (0.06 in.)
	Steel wheel runout	Axial	0—1.0 mm (0—0.04 in.)	2.0 mm (0.08 in.)
		Radial	0—1.0 mm (0—0.04 in.)	1.5 mm (0.06 in.)
Wheel bearing	End play	Front	0—0.05 mm (0—0.002 in.)	
		Rear	0—0.05 mm (0—0.002 in.)	

Brakes

Item	Measurement	Qualification	Standard or New	Service Limit
Parking brake	Number of clicks when pedal pressed with 294 N (30 kgf, 66 lbf) of force		6 to 7 clicks	
	Drum I.D.		199.9 mm—200.0 mm (7.870—7.874 in.)	201.0 mm (7.913 in.)
	Shoe lining thickness		2.4 mm (0.094 in.)	1.0 mm (0.04 in.)
Brake pedal	Pedal height (carpet removed)		165 mm (6 1/2 in.)	
	Free play		1—5 mm (1/16—3/16 in.)	
Master cylinder	Piston-to-push rod clearance		0 mm (0 in.)	
Brake disc	Thickness	Front	27.8—28.1 mm (1.10—1.11 in.)	26.0 mm (1.02 in.)
		Rear	8.9—9.1 mm (0.35—0.36 in.)	7.5 mm (0.30 in.)
	Runout	Front and rear	———	0.04 mm (0.0016 in.)
	Parallelism	Front and rear	———	0.015 mm (0.0006 in.)
Brake pad	Thickness	Front	11.5—12.2 mm (0.45—0.48 in.)	1.6 mm (0.06 in.)
		Rear	8.3—9.0 mm (0.33—0.35 in.)	1.6 mm (0.06 in.)

Air Conditioning

Item	Measurement	Qualification	Standard or New
Refrigerant	Type		HFC-134a (R-134a)
	Capacity of system		440—490 g (14.9—16.6 oz)
Refrigerant oil	Type		SP-10 (P/N 38897-P13-A01AH or 38899-P13-A01)
	Capacity of components	Condenser	50 mL (1 2/3 fl·oz)
		Evaporator	40 mL (1 1/3 fl·oz)
		Each line and hose	10 mL (1/3 fl·oz)
		Compressor	80—90 mL (2 2/3—3 fl·oz)
Compressor	Field coil resistance	At 68 °F (20 °C)	3.15 —3.45 Ω
	Pulley-to-armature plate clearance		0.35—0.65 mm (0.014—0.026 in.)

Design Specifications

Item	Measurement	Qualification	Specification
DIMENSIONS	Overall length		4,518 mm (177.9 in.)
	Overall width		1,820 mm (71.6 in.)
	Overall height		1,680 mm (66.1 in.)
	Wheelbase		2,620 mm (103.1 in.)
	Track	Front	1,565 mm (61.6 in.)
		Rear	1,565 mm (61.6 in.)
	Seating capacity		Five (5)
WEIGHT	Gross Vehicle Weight Rating (GVWR)		2,070 kg (4,610 lbs)
ENGINE	Type		Water cooled, 4-stroke DOHC i-VTEC gasoline engine
	Cylinder arrangement		Inline 4-cylinder, transverse
	Bore and stroke		87 x 99 mm (3.43 x 3.90 in.)
	Displacement		2,354 cm^3 (144 cu in.)
	Compression ratio		9.7
	Valve train		Chain drive, DOHC i-VTEC 4 valves per cylinder
	Lubrication system		Forced, wet sump, with trochoid pump
	Oil pump displacement	At 6,000 rpm	58.0 L (61.3 US qt)/minute
	Water pump displacement	At 6,000 rpm	120 L (127 US qt)/minute
	Fuel required		Regular UNLEADED gasoline with 87 Pump Octane Number or higher
STARTER	Type		Gear reduction
	Normal output		1.1 kW
	Nominal voltage		12 V
	Hour rating		30 seconds
	Direction of rotation		Counterclockwise as viewed from drive end

Item	Measurement	Qualification	Specification
AUTOMATIC TRANSMISSION	Type		Electronically controlled automatic, 5-speed forward, 1 reverse, 3-element torque converter with lock-up clutch
	Primary reduction		Direct 1:1
	Gear ratio	1st	2.786
		2nd	1.614
		3rd	1.082
		4th	0.773
		5th	0.566
		Reverse	2.000
	Transfer gear	Type	Single helical gear
		Gear ratio	0.875
	Differential final gears	Type	Single helical gear
		Gear ratio	4.500
STEERING	Type		Hydraulic power-assisted rack and pinion
	Overall ratio		13.73
	Turns, lock-to-lock		2.67
	Steering wheel diameter		380 mm (14.9 in.)
SUSPENSION	Type	Front	Independent strut with stabilizer, coil spring
		Rear	Independent double wishbone with stabilizer, coil spring
	Shock absorber	Front	Telescopic, hydraulic, nitrogen gas-filled
		Rear	Telescopic, hydraulic, nitrogen gas-filled
TIRES	Size		225/65R17 102T
WHEEL ALIGNMENT	Camber	Front	0 °00 '
		Rear	−1 °00 '
	Caster	Front	3 °02 '
	Total toe-in	Front	0 mm (0 in.)
		Rear	2 mm (0.08 in.)
BRAKES	Type of service brake	Front	Power-assisted self-adjusting ventilated disc
		Rear	Power-assisted self-adjusting solid disc
	Type of parking brake		Mechanical actuating, rear wheels
	Pad friction surface area	Front	60.5 cm^2 (9.38 sq in.) x 2
		Rear	27.9 cm^2 (4.32 sq in.) x 2
	Parking brake shoe friction surface area	Rear	57.0 cm^2 (8.84 sq in.) x 2

(cont'd)

Design Specifications

Item	Measurement	Qualification	Specification
AIR CONDITIONING	Compressor	Type	Scroll
		Capacity	97.9 mL (5.97 cu in.)/rev.
		Maximum speed	10,000 rpm
		Lubricant capacity	80 mL (2 2/3 fl·oz)
		Lubricant type	SP-10
	Condenser	Type	Corrugated fin
	Evaporator	Type	Corrugated fin
	Blower	Type	Stabilized swirling flow
		Motor type	260 W/12 V
		Speed control	5-speed
		Maximum capacity	465 m^3 (16.394 cu ft)/h
	Temperature control		Air-mix type
	Compressor clutch	Type	Dry, single plate, poly-V belt drive
		Electrical power consumption at 68 °F (20 °C)	42 W max. at 12 V
	Refrigerant	Type	HFC-134a (R-134a)
		Capacity	440—490 g (14.9—16.6 oz)
ELECTRICAL RATINGS	Battery		12 V—47 Ah/20 HR (12 V—38 Ah/5 HR)
	Fuses	Under-hood fuse/relay box	100 A, 80 A, 50 A, 40 A, 30 A, 20 A, 15 A, 10 A, 7.5 A
		Under-dash fuse/relay box	30 A, 20 A, 15 A, 10 A, 7.5 A
	Light bulbs	Headlight high beam	12 V—55 W
		Headlight low beam	12 V—50 W
		Front side marker/parking light	12 V—5 W
		Front turn signal lights	12V—21 W Amber color
		Rear turn signal lights	12 V—21 W Amber color
		Brake/Taillights	12 V—21/5 W (two filaments)
		Rear side marker light	12 V—5 W
		High mount brake light	12 V—21 W
		Back-up lights	12 V—18 W
		License plate light	12 V—5 W
		Ceiling lights	12 V—8 W
		Individual map light	12 V—8 W
		Cargo area light	12 V—8 W
		Gauge lights	12 V—LED (non-replaceable)
		Indicator lights	12 V—LED, 14 V—0.56 W, 0.84 W

Body Specifications

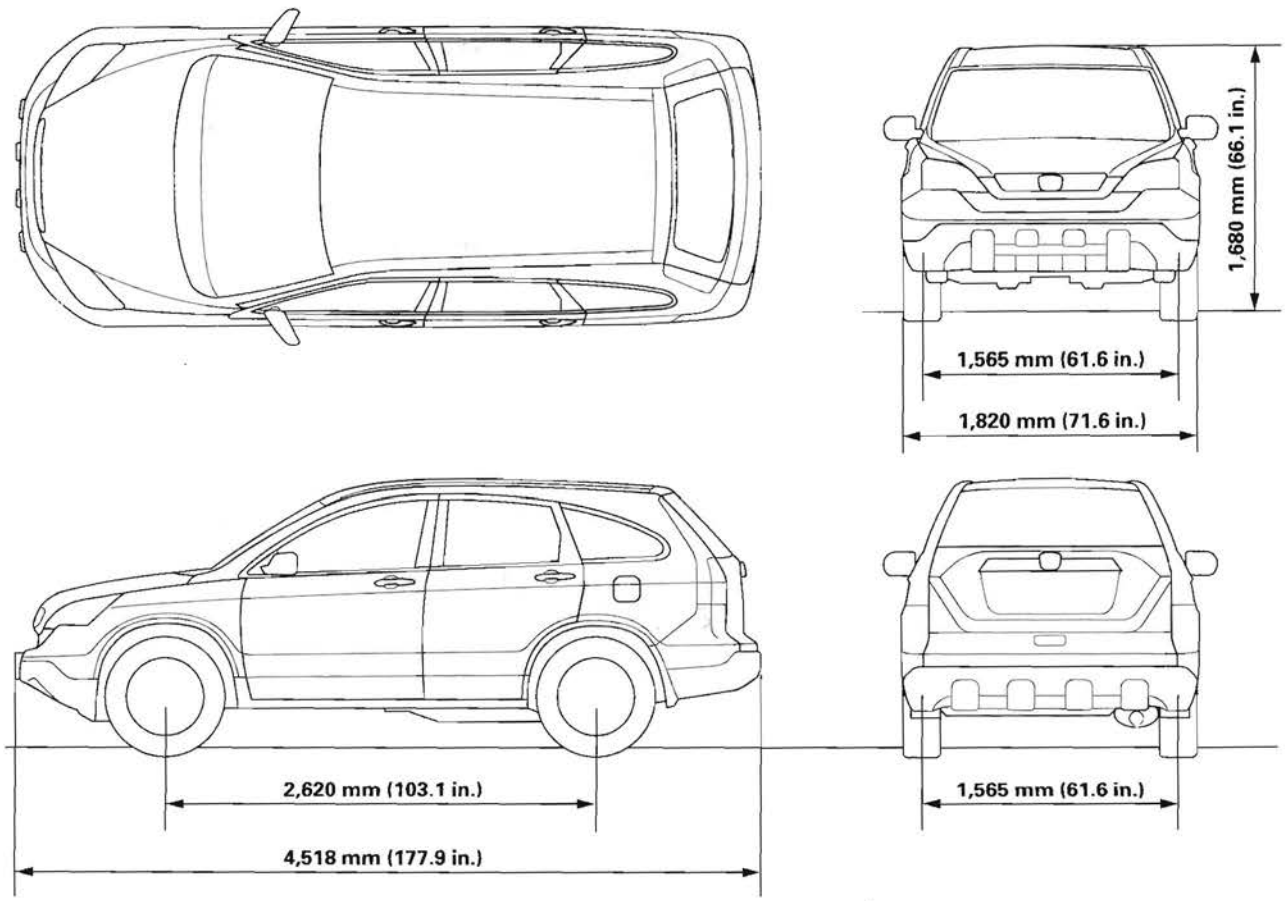

Maintenance

Lubricants and Fluids **3-2**

Maintenance Minder
General Information 3-4
Maintenance Main Items 3-7
Maintenance Sub Items 3-8

Lubricants and Fluids

For details of lubrication points and type of lubricants to be applied, refer to the illustrated index and various work procedures (such as Assembly/Reassembly, Replacement, Overhaul, Installation, etc.) contained in each section.

	Application	Lubricant or Fluid
A	Engine	Honda Motor Oil: American Honda P/N 08798-9023 (5W-20), Honda Canada P/N CA66806 (5W-20) Look for the API certification seal on the oil container. Make sure it says "For Gasoline Engines." SAE viscosity: See chart.
B	Automatic transmission	Honda Automatic Transmission Fluid (ATF-Z1): American Honda P/N 08200-9001, Honda Canada P/N CA66689 Always use Honda ATF-Z1. Using a non-Honda ATF can affect shift quality.
C	Brake system (including VSA lines)	Honda DOT 3 Brake Fluid: P/N 08798-9008 Always use Honda DOT 3 Brake Fluid. Using a non-Honda brake fluid can cause corrosion and decrease the life of the system.
D E F G H I	Brake booster clevis Battery terminals Fuel fill door Door checker pin Hood hinges and hood latch Tailgate hinges	Multipurpose Grease
J	Caliper piston boots, caliper piston seals, caliper pins, and boots	Honda Silicone Grease: P/N 08C30-B0234M
K	Air conditioning compressor	Compressor Oil: SP-10 (P/N 38897-P13-A01AH or 38899-P13-A01) for refrigerant HFC-134a (R-134a)
L	Power steering system	Honda Power Steering Fluid: P/N 08206-9002 Always use Honda Power Steering Fluid. Using any other type of power steering fluid or automatic transmission fluid can cause increased wear and poor steering in cold weather.
M	Rear differential (4WD)	Honda Dual Pump Fluid: P/N 08200-9002
N	Cooling system	Honda Long Life Antifreeze/Coolant Type 2: P/N OL 999-9001

API CERTIFICATION SEAL



Recommended Engine Oil
Engine oil viscosity for ambient temperature ranges

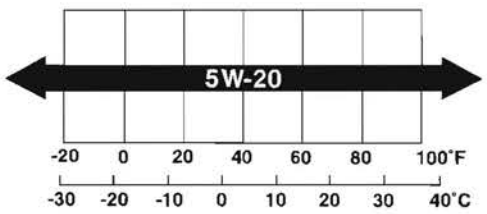

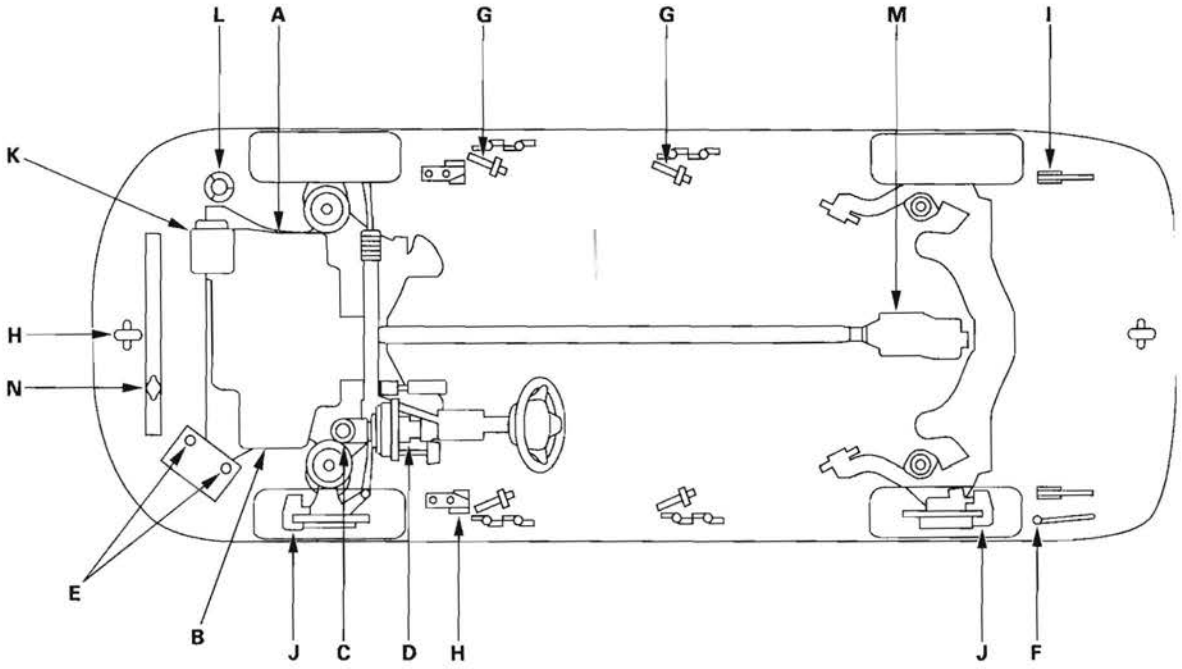
L
A
G
G
M
I
K
H
N
E
B
J
C
D
H
J
F

Maintenance Minder

General Information

Maintenance Display

The Maintenance Minder is an important feature of the information display. The CR-V's onboard computer (PCM) calculates the remaining engine oil life and automatic transmission fluid life. The system also displays the code for other scheduled maintenance items needing service.

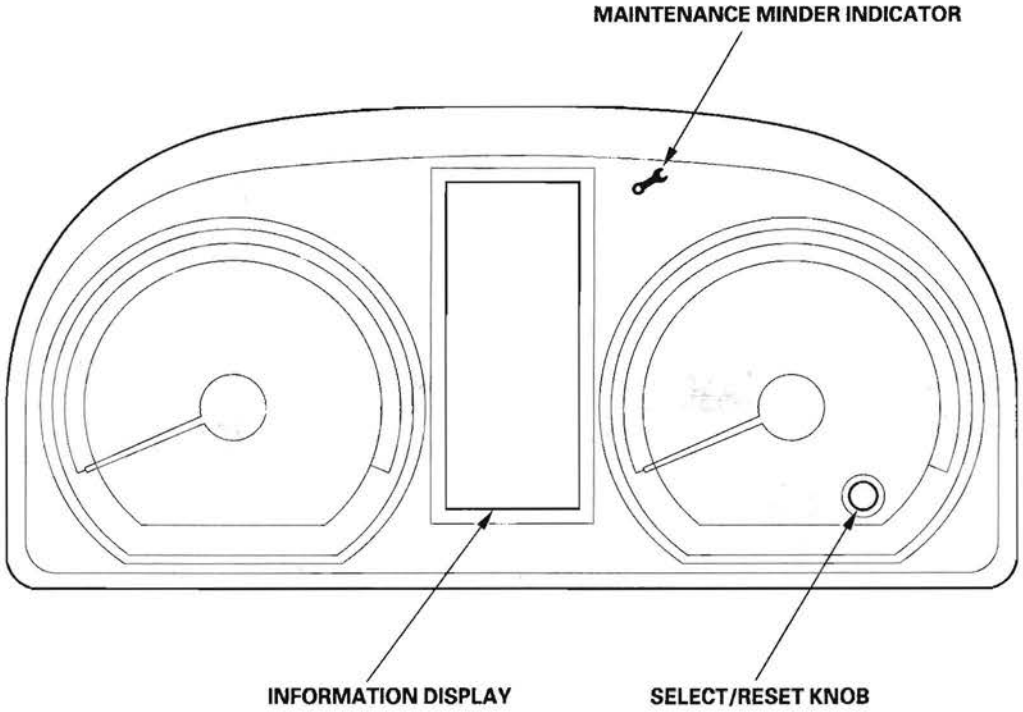

Service Information

1. The remaining engine oil life (A) is shown as a percentage on the information display. To see the current engine oil life, turn the ignition switch to the ON (II) position, then push and release the SELECT/RESET knob repeatedly until the engine oil life displays.

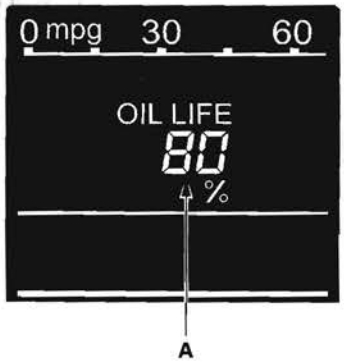

2. When the ignition switch is in the ON (II) position, and the remaining engine oil life (A) is 6 % to 15 %, the remaining engine oil life and other scheduled maintenance item(s) needing service are displayed. The maintenance minder indicator (B) also comes on when the engine oil life is 15 % or less. To cancel the display and the indicator, press the SELECT/RESET knob.

   - Complete list of maintenance main items (C) (see page 3-7).
   - Complete list of maintenance sub items (D) (see page 3-8).

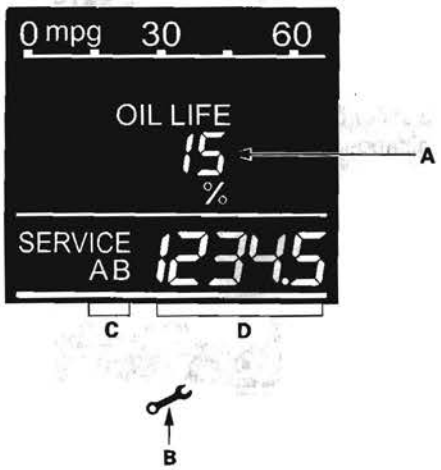

3. When the ignition switch is in the ON (II) position, and the remaining engine oil life is 1 % to 5 %, the message "SERVICE" (A) is displayed along with engine oil life and the same maintenance item code(s).

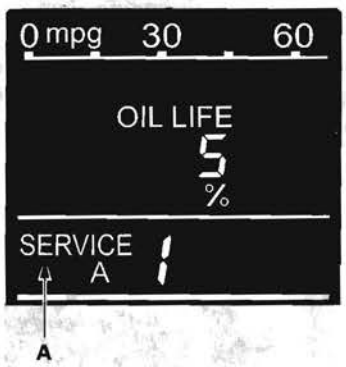

4. When the ignition switch is in the ON (II) position, and the remaining engine oil life is 0 %, the engine oil life indicator (A) blinks.
   Pressing the SELECT/RESET knob cancels the display, but the maintenance minder indicator stays on.

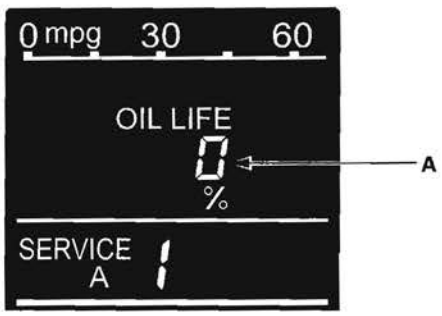

(cont'd)

General Information (cont'd)

5. If the indicated maintenance is not done, the engine oil life indicator shows a negative mileage, for example "—10," on the display. If the negative mileage is between 0 and —9, the indicator is displayed for only a few seconds when the ignition switch is turned to the ON (II) position.
   The negative mileage remains displayed after the vehicle is driven more than 10 miles (for USA models) or 10 km (for Canada models) after 0 % oil life is reached. This means the indicated maintenance item(s) should have been done more than 10 miles (or 10 km) ago.



Resetting the Maintenance Information Display

NOTE:
- The vehicle must be stopped to reset the display. If a required service is done and the display is not reset, or if the maintenance display is reset without doing the service, the system will not show the proper maintenance timing. This can lead to serious mechanical problems because there will be no accurate record of when the required maintenance is needed.
- The engine oil life and the maintenance items can be reset independently only with the HDS.

1. Turn the ignition switch to the ON (II) position.
2. Push and release the SELECT/RESET knob repeatedly until the engine oil life indicator is displayed.
3. Press and hold the SELECT/RESET knob for about 10 seconds. The information display shows the reset mode display.

   NOTE: If you are resetting the display when the engine oil life is more than 15 %, make sure any maintenance item(s) requiring service are done before resetting the display.



4. Press and hold the SELECT/RESET knob for another 5 seconds. The maintenance item code(s) will disappear, and the engine oil life will reset to "100".

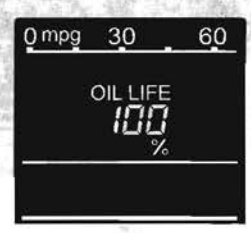

Maintenance Main Items

If the message "SERVICE" does not appear more than 12 months after the display is reset, change the engine oil every year.

NOTE:
- Replace the brake fluid every 3 years (independent of the maintenance messages in the information display).
- Inspect idle speed every 160,000 miles (256,000 km).
- Adjust the valves during services A, B, 1, 2, or 3, only if they are noisy.

Symbol	Maintenance Main Items
A	Replace engine oil (see page 8-10) Engine oil capacity without engine oil filter: 4.0 L (4.2 US qt).
B	Replace engine oil and oil filter (see page 8-11) Engine oil capacity with engine oil filter: 4.2 L (4.4 US qt).
	Inspect front and rear brakes (see page 19-3) • Check pads and discs for wear (thickness), damage, and cracks. • Check calipers for damage, leaks, and tightness of mounting bolts.
	Check parking brake adjustment (see page 19-7) Check the number of clicks (6 to 7) when the parking brake pedal is pressed with 294 N (30 kgf, 66 lbf) of force.
	Inspect tie-rod ends, steering gearbox, and gearbox boots (see page 17-8) • Check rack grease and steering linkage. • Check boots for damage and leaking grease.
	Inspect suspension components (see page 18-3) • Check bolts for tightness. • Check condition of ball joint boots for deterioration and damage.
	Inspect driveshaft boots (see page 16-3) Check boots for cracks and boot bands for tightness.
	Inspect brake hoses and lines including VSA (see page 19-34) Check the master cylinder and VSA modulator-control unit for damage or leakage.
	Inspect all fluid levels, condition of fluids, and for leaks. • Engine coolant (see page 10-6) • Automatic transmission fluid (ATF) (see page 14-238) • Rear differential fluid (see page 15-21) • Power steering fluid (see page 17-12) • Brake fluid (see page 19-9) • Windshield washer fluid
	Inspect exhaust system* (see page 9-9) Check catalytic converter heat shields, exhaust pipes, and muffler for damage, leaks, and tightness.
	Inspect fuel lines and connections* (see page 11-321) Check for loose connections, cracks, and deterioration; retighten loose connections and replace damaged parts.

NOTE: According to state and federal regulations, failure to do the maintenance items marked with an asterisk (*) will not void the customer's emissions warranties. However, Honda recommends that all maintenance services be done at the recommended interval, to ensure long-term reliability.

Maintenance Sub Items

Number	Maintenance Sub Items
1	Rotate tires, and check tire inflation and condition. Follow the pattern shown in the Owner's Manual.
2	Replace air cleaner element (see page 11-340) Replace every 15,000 miles (24,000 km), if the vehicle is primarily driven in dusty conditions.
	Replace dust and pollen filter (see page 21-54) • Replace the filter at 15,000 miles (24,000 km) intervals if the vehicle is primarily driven in urban areas that have high concentrations of soot in the air from industry and diesel-powered vehicles. • Replace the filter whenever airflow from the heating and cooling system is less than normal.
	Inspect drive belt (see page 4-29) Look for cracks and damage, then check the position of the drive belt auto-tensioner indicator.
3	Replace automatic transmission fluid (see page 14-239) Capacity 2WD: 2.6 L (2.7 US qt), 4WD: 2.5 L (2.6 US qt), use Honda Automatic transmission fluid (ATF-Z1)
4	Replace spark plugs (see page 4-20) Use IZFR6K11 (NGK) or SKJ20DR-M11 (DENSO).
	Inspect the valve clearance (cold) (see page 6-9) Intake: 0.21—0.25 mm (0.008—0.010 in.), Exhaust: 0.28—0.32 mm (0.011—0.013 in.).
5	Replace engine coolant (see page 10-6) Capacity (including reservoir): 5.0 L (1.32 US qt); use Honda Long Life Antifreeze/Coolant Type 2.
6	Replace rear differential fluid (see page 15-21) Capacity: 1.2 L (1.3 US qt); use Honda Dual Pump Fluid.

SUPPLEMENTAL RESTRAINT SYSTEM (SRS) (If engine electrical maintenance is required)

The CR-V SRS includes a driver's airbag in the steering wheel hub, a passenger's airbag in the dashboard above the glove box, seat belt tensioners in the front seat belt retractors, seat belt buckle tensioners in the front seat belt buckles, side curtain airbags in the sides of the roof, and side airbags in the front seat-backs. Information necessary to safely service the SRS is included in this Service Manual. Items marked with an asterisk (*) on the contents page include or are located near SRS components. Servicing, disassembling, or replacing these items require special precautions and tools, and should be done only by an authorized Honda dealer.

- To avoid rendering the SRS inoperative, which could lead to personal injury or death in the event of a severe frontal or side collision, all SRS service work should be done by an authorized Honda dealer.
- Improper service procedures, including incorrect removal and installation of the SRS, could lead to personal injury caused by unintentional deployment of the airbags and/or side airbags.
- Do not bump or impact the SRS unit, front impact sensors, or side impact sensors when the ignition switch is ON (II), or for at least 3 minutes after the ignition switch is turned OFF; otherwise, the system may fail in a collision, or the airbags may deploy.
- SRS electrical connectors are identified by yellow color coding. Related components are located in the steering column, front console, dashboard, dashboard lower panel, in the dashboard above the glove box, in the front seats, in the roof side, and around the floor. Do not use electrical test equipment on these circuits.

Engine Electrical

Engine Electrical
Special Tools 4-2

Starting System
Component Location Index 4-3
Symptom Troubleshooting Index 4-4
Circuit Diagram 4-5
Starter Circuit Troubleshooting 4-6
Starter Performance Test 4-8
Starter Removal and Installation 4-9
Starter Overhaul 4-11

Ignition System
Component Location Index 4-16
Circuit Diagram 4-17
Ignition Timing Inspection 4-18
Ignition Coil Removal/ Installation 4-19
Spark Plug Inspection 4-20

Charging System
Component Location Index 4-21
Symptom Troubleshooting Index 4-22
Circuit Diagram 4-23
Charging System Indicator Circuit Troubleshooting 4-24
Alternator and Regulator Circuit Troubleshooting 4-26
Alternator Control Circuit Troubleshooting 4-27
Drive Belt Inspection 4-29
Drive Belt Removal/ Installation 4-29
Drive Belt Auto-tensioner Inspection 4-30
Drive Belt Auto-tensioner Removal/Installation 4-31
Tensioner Pulley Replacement 4-32
Alternator Removal and Installation 4-32
Alternator Overhaul 4-34

Cruise Control
Component Location Index 4-39
Symptom Troubleshooting Index 4-40
Circuit Diagram 4-42
Cruise Control Input Test 4-43
* Cruise Control Combination Switch Test/Replacement 4-45

Special Tools

Ref. No.	Tool Number	Description	Qty
①	07746-0010300	Attachment, 42 x 47 mm	1
②	07749-0010000	Driver	1

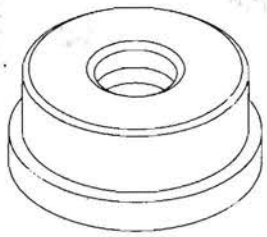

①

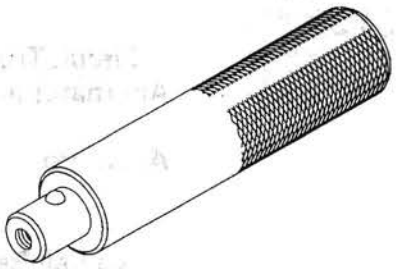

②

Component Location Index

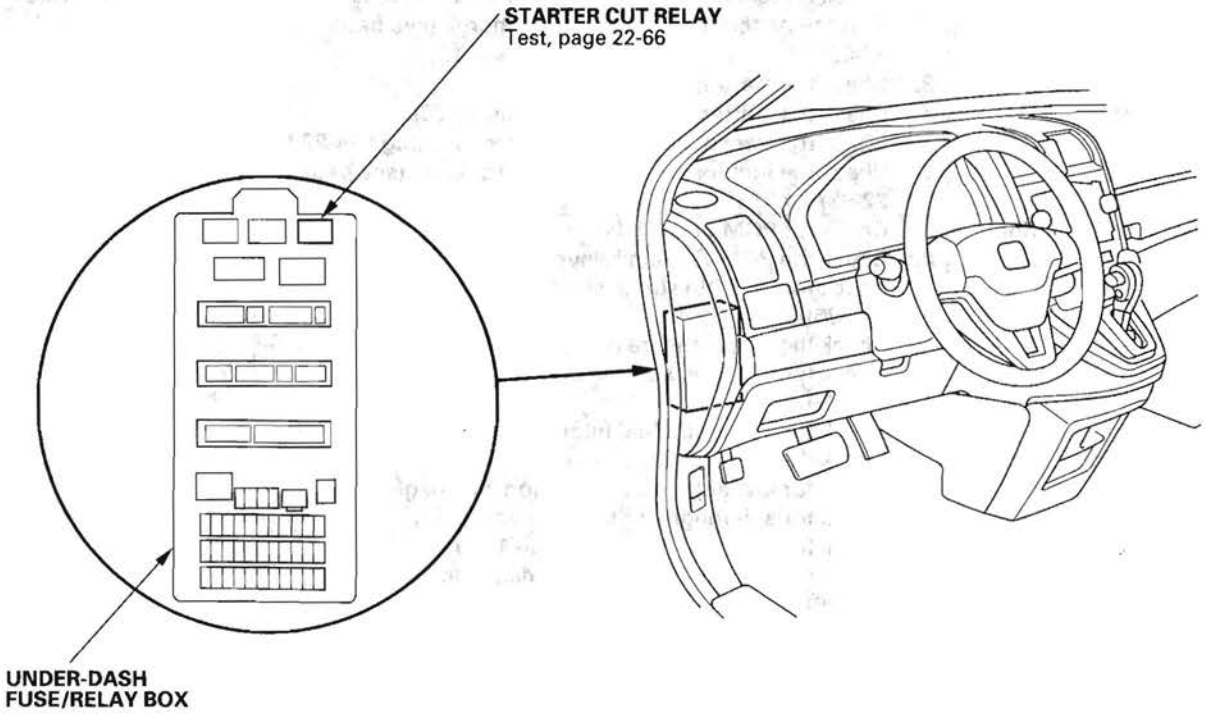

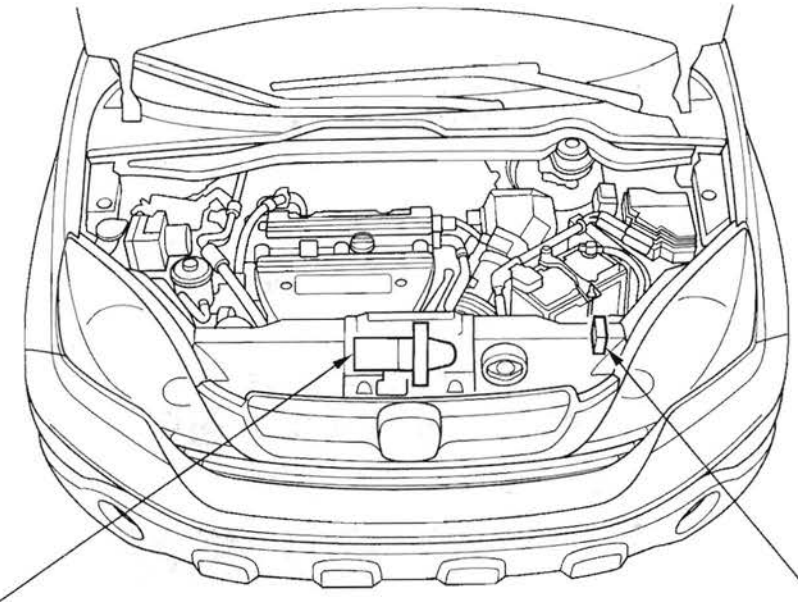

Symptom Troubleshooting Index

Symptom	Diagnostic procedure	Also check for
Engine does not start (does not crank)	1. Check for loose battery terminals or connections. 2. Test the battery for a low state of charge (see page 22-65). 3. Check the starter (see page 4-6). 4. Check the starter cut relay (see page 22-66). 5. Check the transmission range switch (see page 14-292). 6. Check the ignition switch or related circuits (see page 22-68).	Poor ground at G401
Engine cranks, but does not start	1. Check for PGM-FI DTCs (see page 11-3). 2. Check the PGM-FI main relays (see page 22-66). 3. Check for IMMOBI status and function (see page 22-296). 4. Check the fuel pressure (see page 11-319). 5. Check for a plugged or damaged fuel line (see page 11-321). 6. Check for a plugged fuel filter (see page 11-331). 7. Check the throttle body (see page 11-342). 8. Check for low engine compression (see page 6-6). 9. Check for a damaged or broken cam chain.	
Engine is hard to start	1. Check for PGM-FI DTCs (see page 11-3). 2. Check for IMMOBI status and function (see page 22-296). 3. Check the fuel pressure (see page 11-319). 4. Check for a plugged or damaged fuel line (see page 11-321). 5. Check for a plugged fuel filter (see page 11-331).	
Engine cranks slowly	1. Check for loose battery terminals or connections. 2. Test the battery for a low state of charge (see page 22-65). 3. Check the starter for binding (see page 4-11). 4. Check for excessive drag in the engine.	

Circuit Diagram

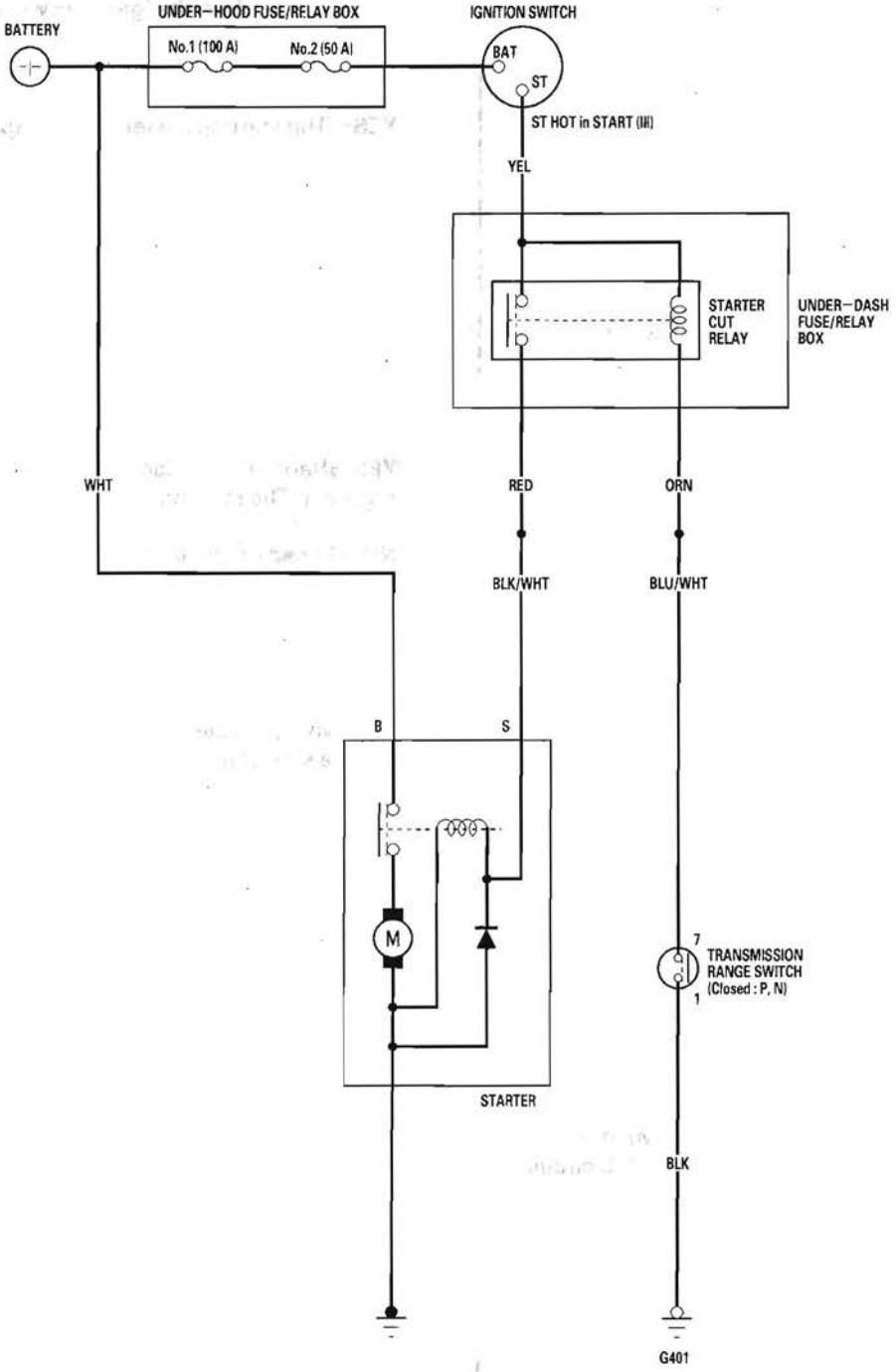

Starter Circuit Troubleshooting

NOTE:
- Air temperature must be between 59 and 100 °F (15 and 38 °C) during this procedure.
- After this inspection, you must reset the powertrain control module (PCM), otherwise the PCM will continue to stop the injectors from functioning.
- The battery must be in good condition and fully charged.

1. Hook up this equipment:
   - Ammeter, 0—400 A
   - Voltmeter, 0—20 V (accurate within 0.1 V)

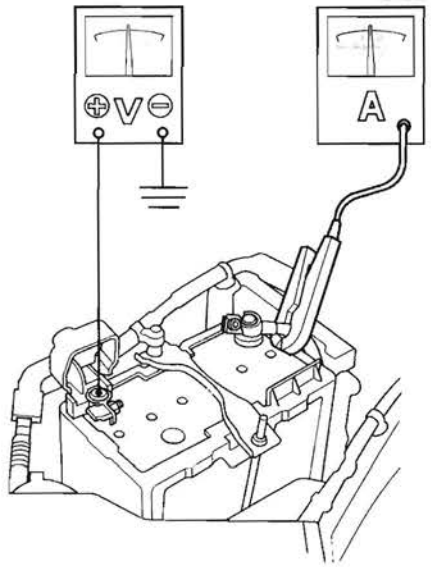

2. Connect the HDS to the data link connector (DLC) (see step 2 on page 11-3).

3. Turn the ignition switch ON (II).

4. Make sure the HDS communicates with the vehicle and the powertrain control module (PCM). If it doesn't communicate, troubleshoot the DLC circuit (see page 11-197).

5. Select PGM-FI, INSPECTION, then ALL INJECTORS OFF on the HDS.

6. Set the parking brake, then with the shift lever in P or N position, turn the ignition switch to START (III).

   Does the starter crank the engine normally?

   YES—The starting system is OK. Go to step 13.

   NO—Go to step 7.

7. Check the battery condition (see page 22-65). Check electrical connections at the battery, the negative battery cable to body, the engine ground cables, and the starter for looseness and corrosion. Then try cranking the engine again.

   Does the starter crank the engine?

   YES—Repairing the loose connection corrected the problem. The starting system is OK. Go to step 13.

   NO—Based on the following symptoms, take the appropriate action:

   - If the starter will not crank the engine at all, go to step 8.
   - If the starter cranks the engine erratically or too slowly, go to step 10.
   - If the starter does not disengage from the torque converter ring gear when you release the key, replace the starter, or remove and disassemble it, and check for the following:
     – Solenoid plunger and switch malfunction
     – Dirty drive gear or damaged overrunning clutch

8. Make sure the transmission is in Park or neutral, and set the parking brake. Disconnect the starter subharness 1P connector (A) from the main wire harness 1P connector (B). Connect a jumper wire from the battery positive terminal to the starter subharness 1P connector.

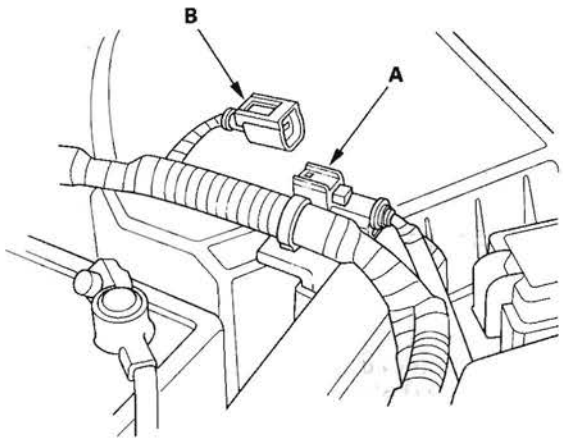

Does the starter crank the engine?

YES—Go to step 9.

NO—Check the BLK/WHT wire between the starter subharness 1P connector and the starter. If the wire is OK, remove the starter, and repair or replace it as necessary. ■

9. Check the following items in the order listed until you find the open circuit:

   - The YEL wire and connectors between the under-dash fuse/relay box and the ignition switch.
   - The RED wire and connectors between the under-dash fuse/relay box and the main wire harness 1P connector.
   - The ignition switch (see page 22-68).
   - The transmission range switch and connector.
   - The starter cut relay (see page 22-66).

10. While cranking the engine, check the cranking voltage and the current draw.

    Is the cranking voltage greater than or equal to 8.5 V and is the current draw less than or equal to 380 A?

    YES—Go to step 11.

    NO—Replace the starter, or remove and disassemble it, and check for these problems:

    - Drag in the starter armature
    - Shorted armature winding
    - Excessive drag in the engine

11. Check the engine speed while cranking the engine.

    Is the engine speed above 100 rpm?

    YES—Go to step 12.

    NO—Replace the starter, or remove and disassemble it, and check for these problems:

    - Open circuit in the starter armature commutator segments
    - Excessively worn starter brushes
    - Open circuit in the commutator brushes
    - Dirty or damaged helical splines or drive gear
    - Faulty drive gear clutch

12. Remove the starter, and inspect its drive gear and the torque converter ring gear for damage. Replace any damaged parts.

13. Select PCM reset (see page 11-4) to cancel ALL INJECTORS OFF on the HDS.

Starter Performance Test

1. Remove the starter (see page 4-9).
2. Connect a fully charged battery to the starter for this test using the thickest (gauge) wire possible (preferably the same gauge as used on the vehicle).

   NOTE: To avoid damaging the starter, never leave the battery connected for more than 10 seconds.

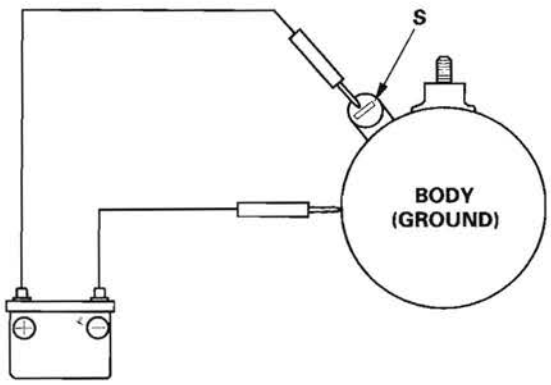

3. Connect the battery as shown. If the starter pinion moves out, it is working properly.
4. Disconnect the battery from the starter body. If the pinion retracts immediately, it is working properly.

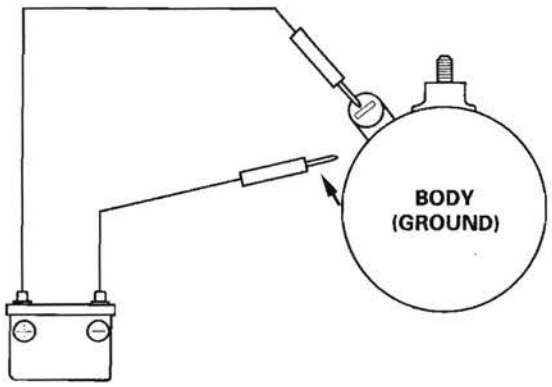

5. Firmly clamp the starter in a vise.
6. Connect the starter to the battery as shown, and check that the motor turns and keeps rotating.

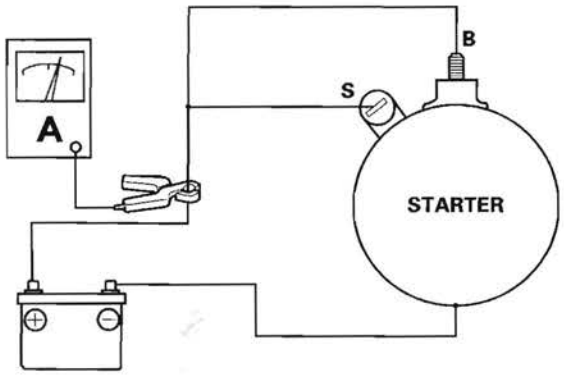

7. If the electric current meets the specification when the battery voltage is at 11.5 V, the starter is working properly.

Specification
Electric Current: 80 A or less

Starter Removal and Installation

Removal

1. Make sure you have the anti-theft code for the audio system and the navigation system (if equipped), then write down the XM radio presets.

2. Disconnect the negative cable from the battery first, then disconnect the positive cable.

3. Remove the splash shield.

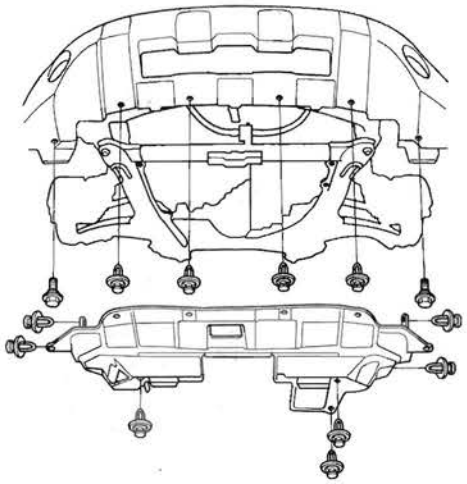

4. Remove the intake manifold bracket.

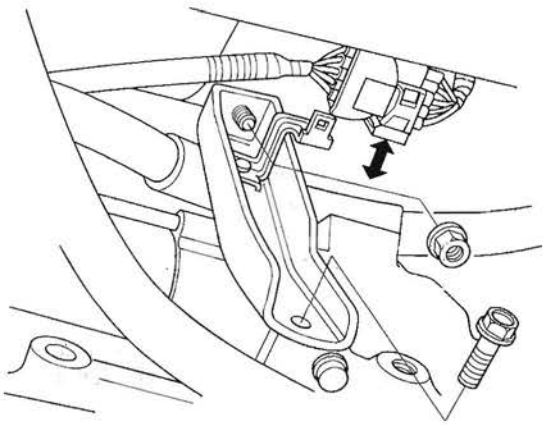

5. Remove the harness clamp (A), and remove the two bolts (B) securing the starter, then remove the starter from the engine.

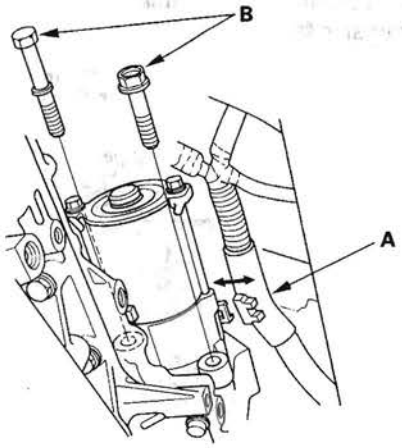

6. Disconnect the starter cable (A) from the B terminal, then disconnect the BLK/WHT wire (B) from the S terminal.

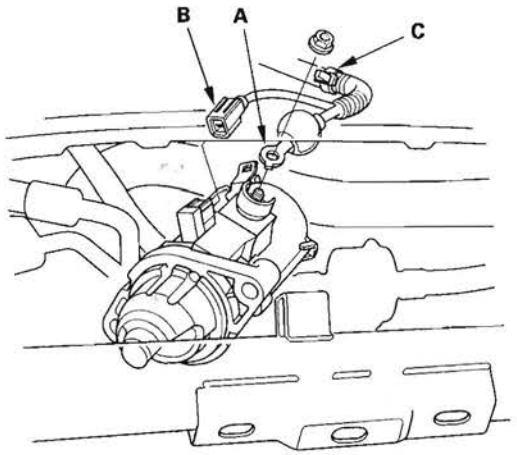

7. Remove the harness clamp (C), then remove the starter.

(cont'd)

Starter Removal and Installation (cont'd)

Installation

1. Install the starter cable (A) and BLK/WHT (B) wire. Make sure the starter cable crimped side of the ring terminal is facing out.

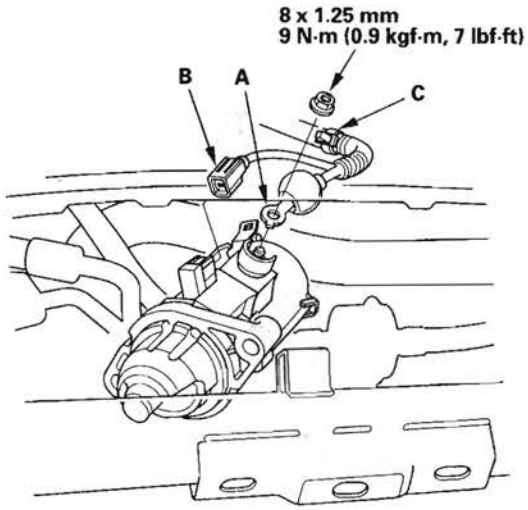

2. Install the harness clamp (C).

3. Install the starter, tighten the bolts, then install the harness clamp (A).

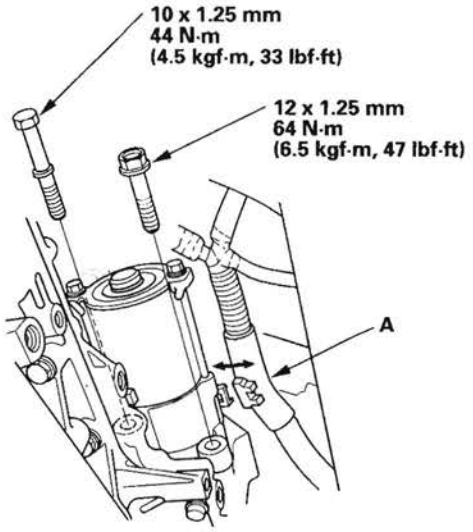

4. Install the intake manifold bracket.

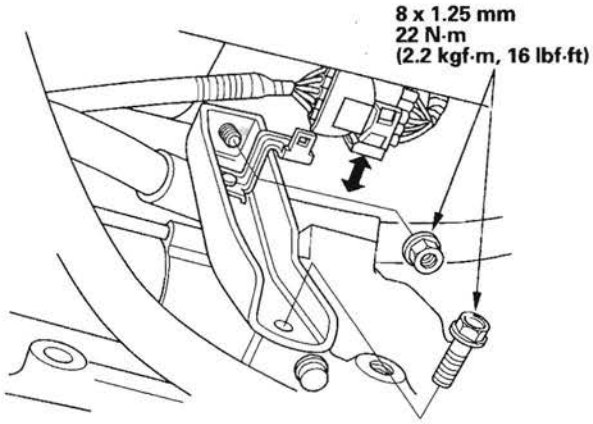

5. Install the splash shield.

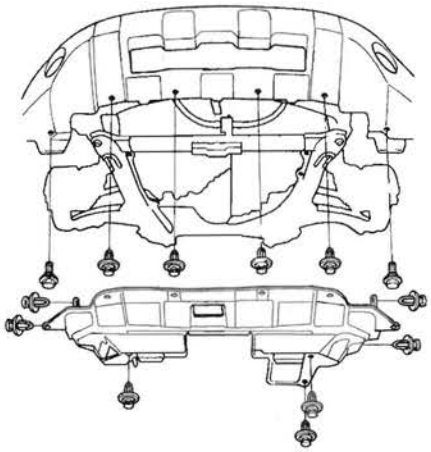

6. Connect the positive cable to the battery first, then connect the negative cable.

7. Start the engine to make sure the starter works properly.

8. Enter the anti-theft code for the audio system and the navigation system (if equipped), then enter the XM radio presets.

9. Set the clock.

Starter Overhaul

Disassembly/Reassembly

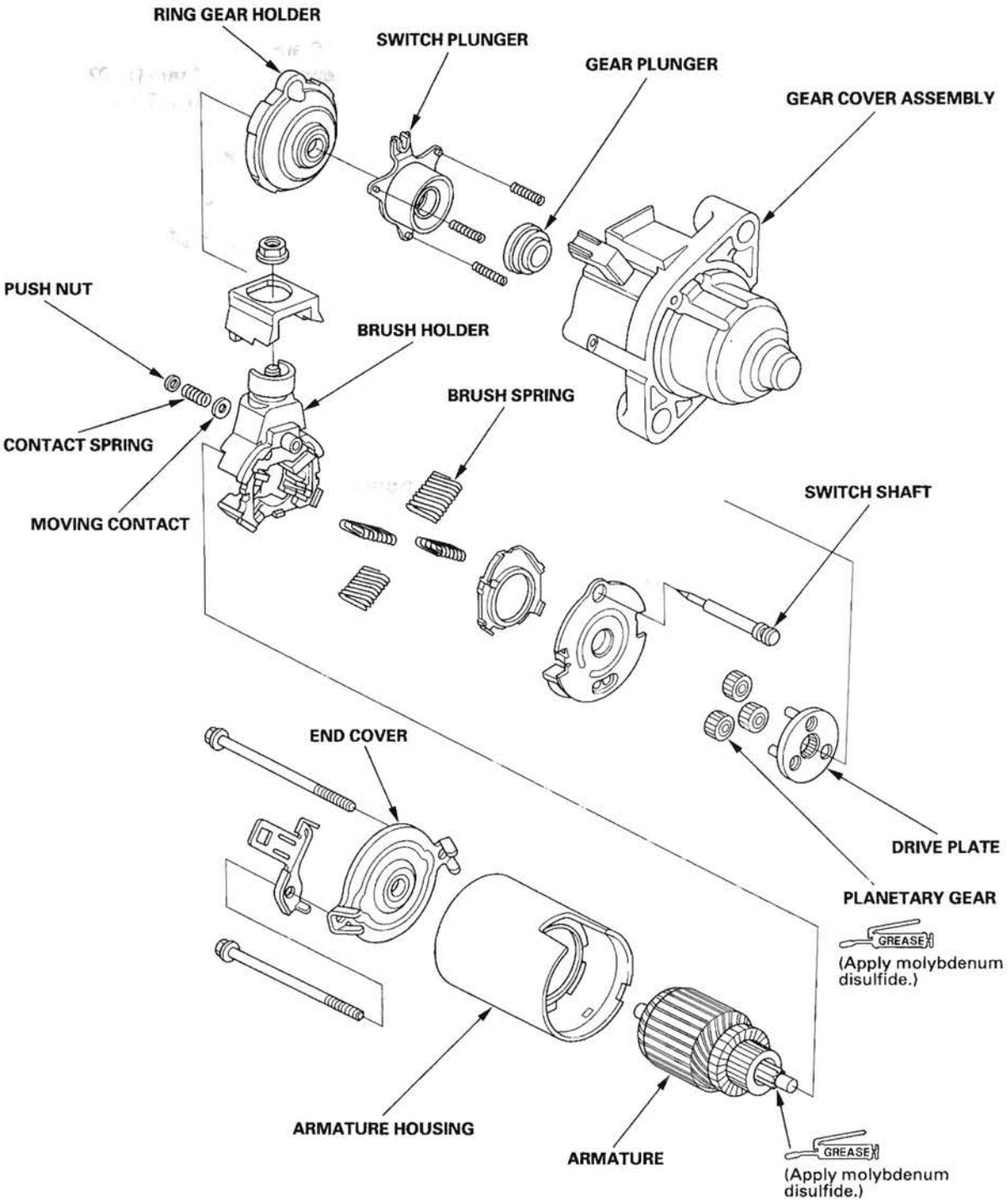

(cont'd)

Starter Overhaul (cont'd)

Armature Inspection and Test

1. Remove the starter (see page 4-9).
2. Disassemble the starter as shown at the beginning of this procedure.
3. Inspect the armature for wear or damage from contact with the permanent magnet. If there is wear or damage, replace the armature.

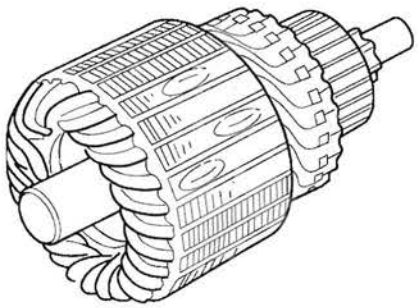

4. Check the commutator (A) surface. If the surface is dirty or burnt, resurface it with an emery cloth or a lathe to the following specifications, or recondition with #500 or #600 sandpaper (B).

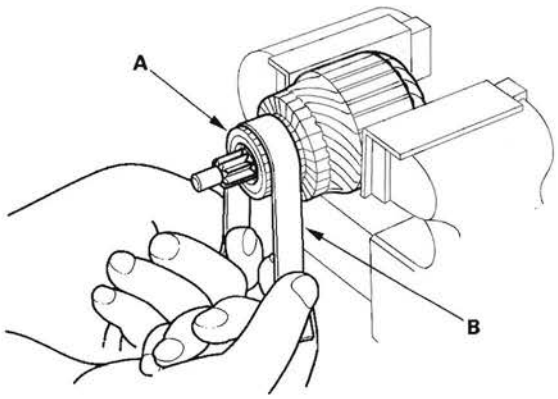

5. Check the commutator diameter. If the diameter is below the service limit, replace the armature.

Commutator Diameter
Standard (New): 28.0—28.1 mm (1.102—1.106 in.)
Service Limit: 27.5 mm (1.083 in.)

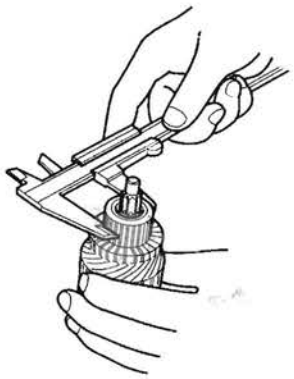

6. Measure the commutator (A) runout.

- If the commutator runout is within the service limit, check the commutator for carbon dust or brass chips between the segments.
- If the commutator runout is not within the service limit, replace the armature.

Commutator Runout
Standard (New): 0.02 mm (0.001 in.) max.
Service Limit: 0.05 mm (0.002 in.)

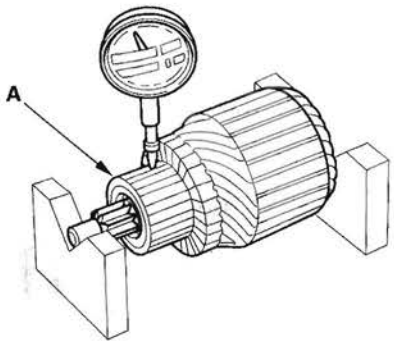

7. Check the mica depth (A). If the mica is too high (B), undercut the mica with a hacksaw blade to the proper depth. Cut away all the mica (C) between the commutator segments. The undercut should not be too shallow, too narrow, or V-shaped (D).

Commutator Mica Depth
Standard (New): 0.40—0.50 mm (0.016—0.020 in.)
Service Limit: 0.15 mm (0.006 in.)

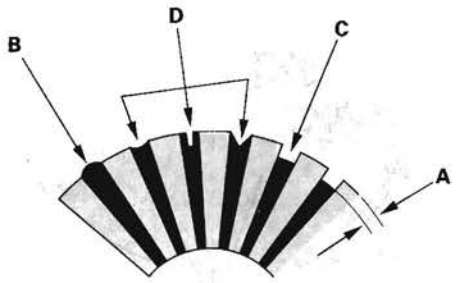

8. Check for continuity between the segments of the commutator. If there is an open circuit between any of the segments, replace the armature.

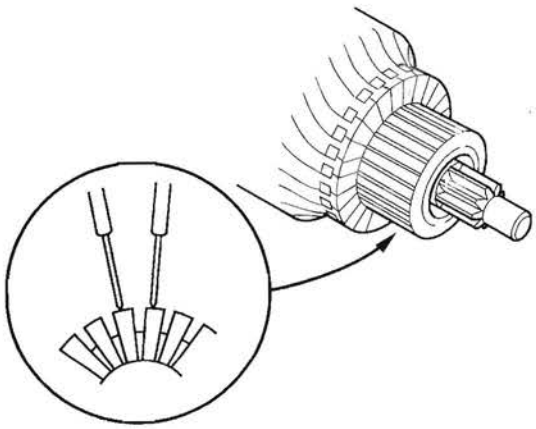

9. Place the armature (A) on an armature tester (B). Hold a hacksaw blade (C) on the armature core. If the blade is attracted to the core or vibrates while the core is turned, the armature is shorted. Replace the armature.

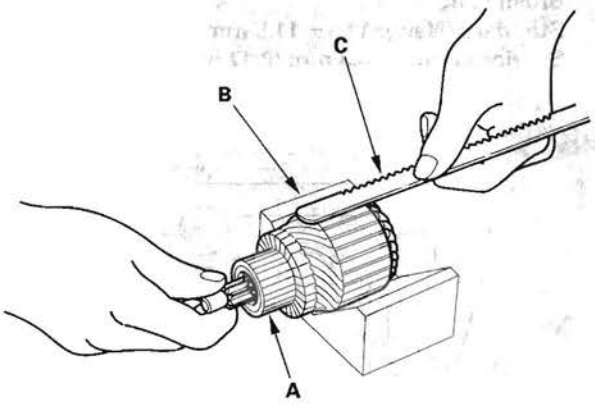

10. Check with an ohmmeter for continuity between the commutator (A) and armature coil core (B), and between the commutator and armature shaft (C). If there is continuity, replace the armature.

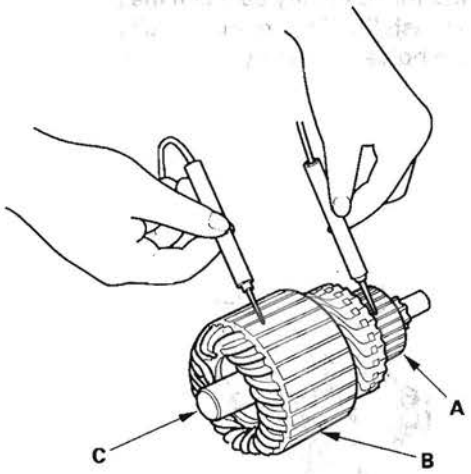

(cont'd)

Starter Overhaul (cont'd)

Starter Brush Inspection

11. Measure the brush length. If it is shorter than the service limit, replace the brush holder assembly.

Brush Length
Standard (New): 11.1—11.5 mm (0.44—0.45 in.)
Service Limit: 4.3 mm (0.17 in.)

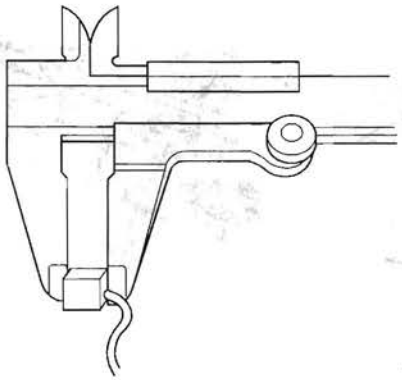

Starter Brush Holder Test

12. Check for continuity between the (+) brush (A) and (—) brush (B). If there is continuity, replace the brush holder assembly.

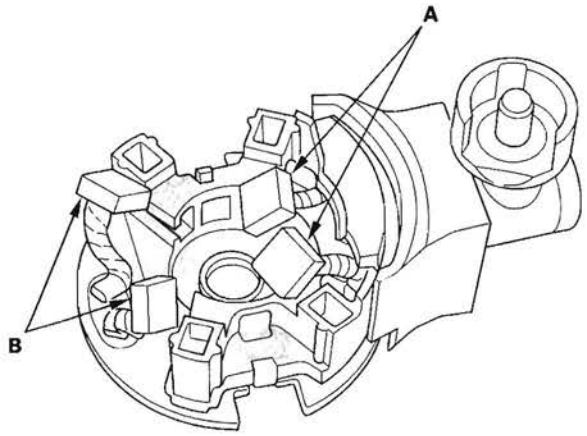

Planetary Gear Inspection

13. Check the planetary gears (A) and ring gear (B). Replace them if they are worn or damaged.

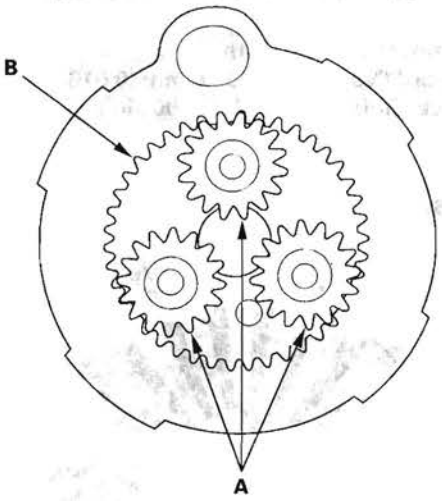

Overrunning Clutch Inspection

14. While holding the drive gear (A), turn the gear shaft (B) counterclockwise. Check that the drive gear comes out to the other end. If the drive gear does not move smoothly, replace the gear cover assembly.

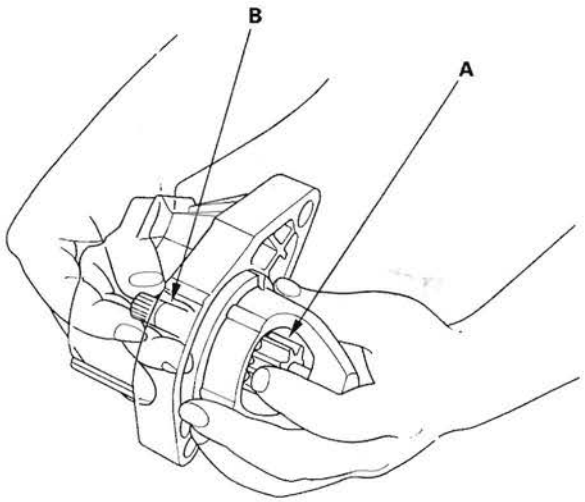

15. While holding the drive gear, turn the gear shaft clockwise. The gear shaft should turn freely. If the gear shaft does not turn freely, replace the gear cover assembly.

16. If the starter drive gear is worn or damaged, replace the overrunning clutch assembly; the gear is not available separately.
Check the condition of the torque converter ring gear to see if the starter drive gear teeth are damaged.

Starter Reassembly

17. Install the brush into the brush holder, and set the armature (A) in the brush holder (B).

NOTE: To seat the new brushes, slip a strip of #500 or #600 sandpaper, with the grit side up, between the commutator and each brush, and smoothly turn the armature. The contact surface of the brushes will be sanded to the same contour as the commutator.

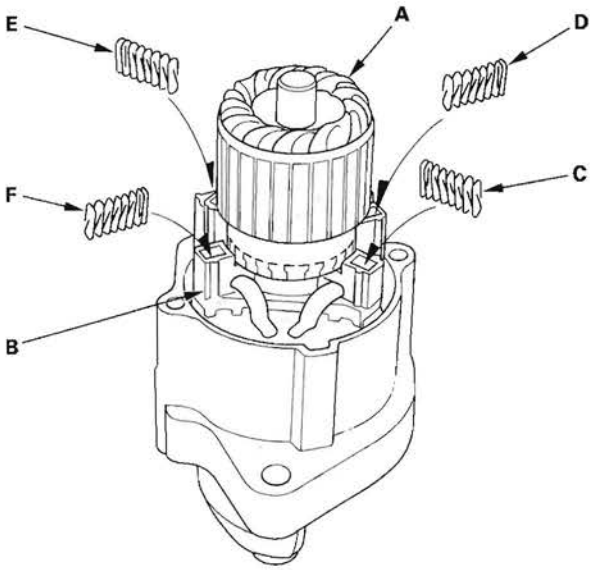

18. While squeezing a spring (C), insert it in the hole on the brush holder, and push it until it bottoms. Repeat this for the other three springs (D, E, and F).

19. Install the armature and brush holder assembly into the housing.

NOTE: Make sure the armature stays in the holder.

Component Location Index

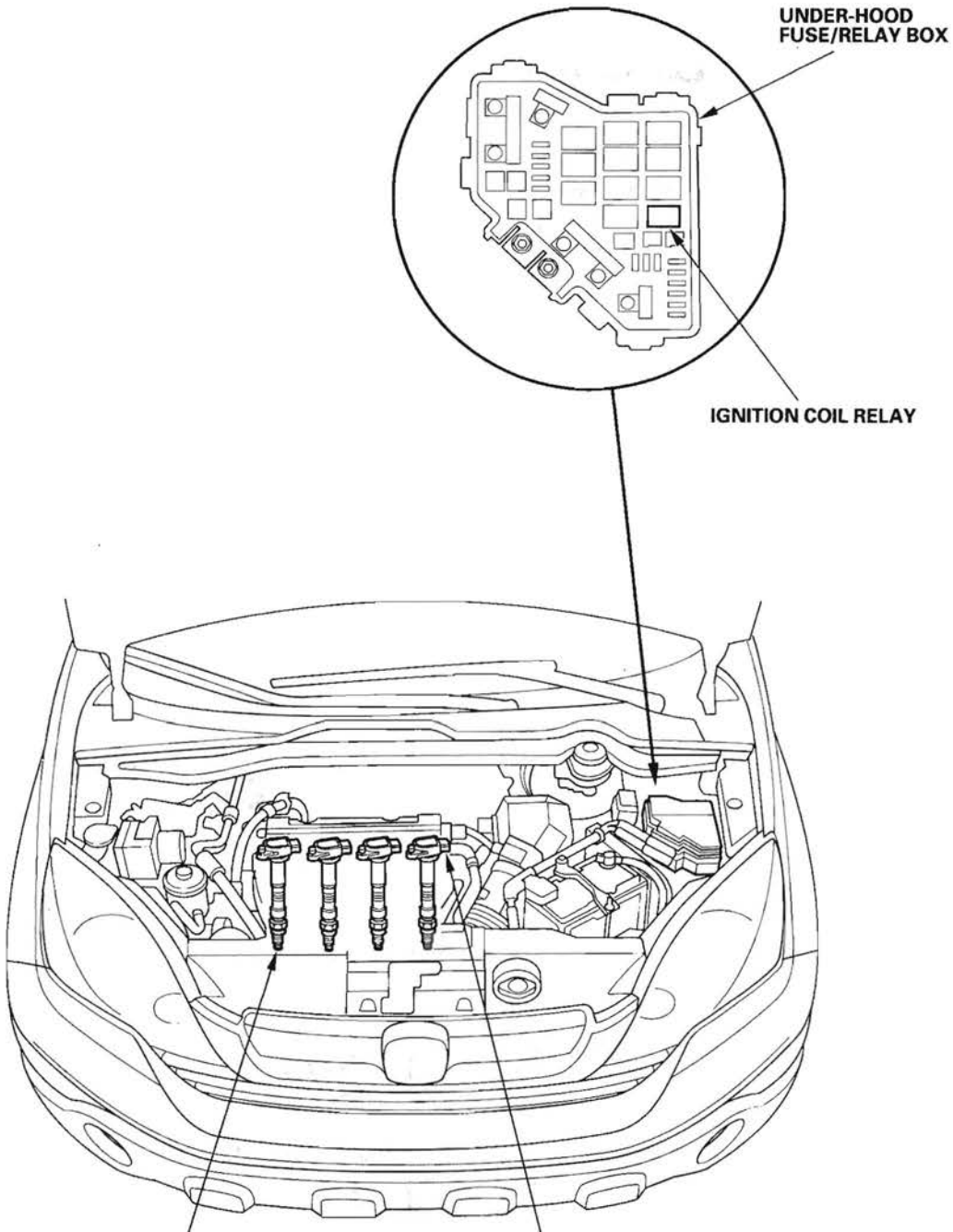

Circuit Diagram

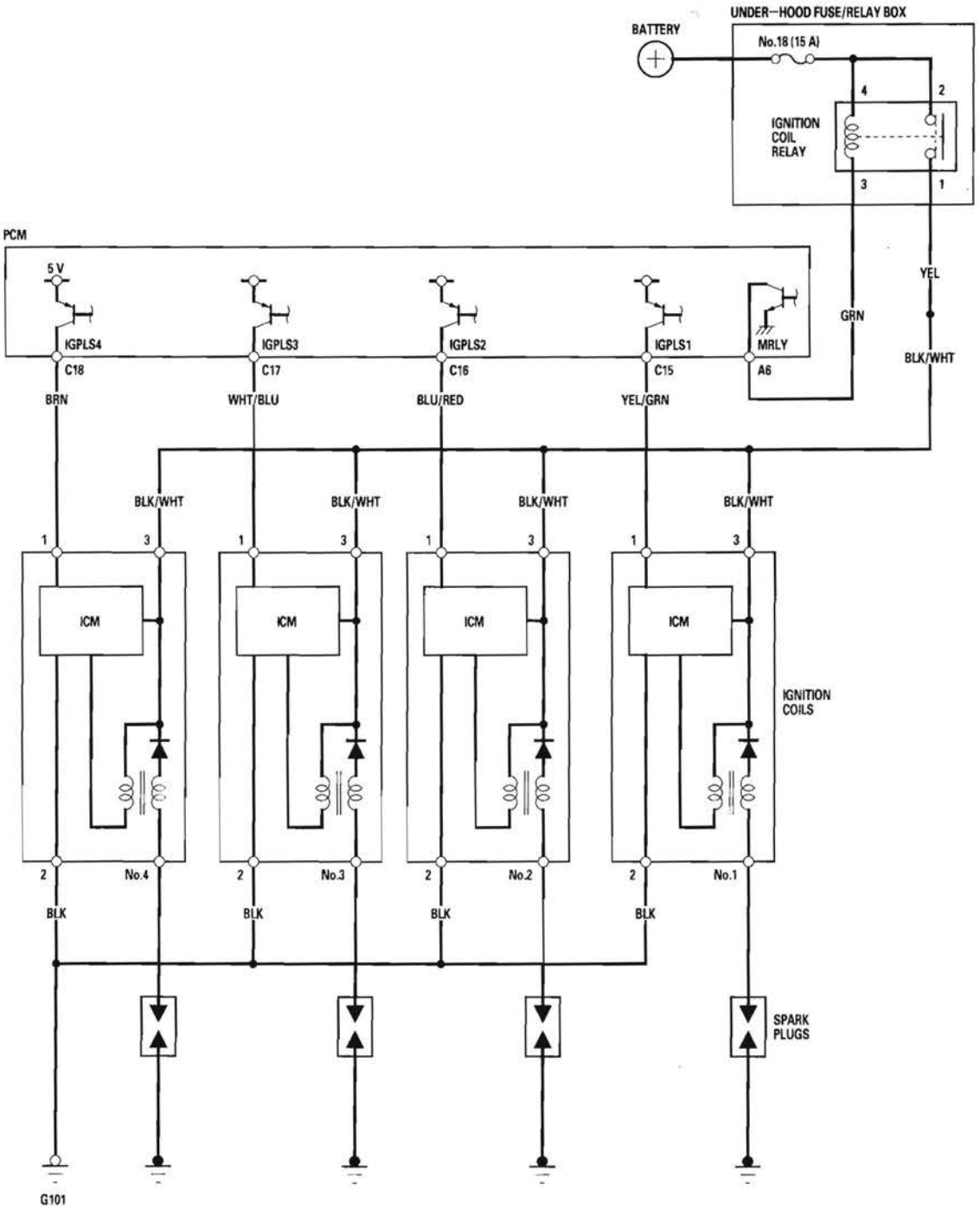

ICM : Ignition Control Module

Ignition Timing Inspection

1. Connect the Honda Diagnostic System (HDS) to the data link connector (DLC) (see step 2 on page 11-3).
2. Turn the ignition switch ON (II).
3. Make sure the HDS communicates with the vehicle and the powertrain control module (PCM). If it doesn't communicate, troubleshoot the DLC circuit (see page 11-197).
4. Start the engine. Hold the engine speed at 3,000 rpm without load (Park or neutral) until the radiator fan comes on, then let it idle.
5. Check the idle speed (see page 11-303).
6. Jump the SCS line with the HDS.
7. Connect the timing light to the service loop (white tape).

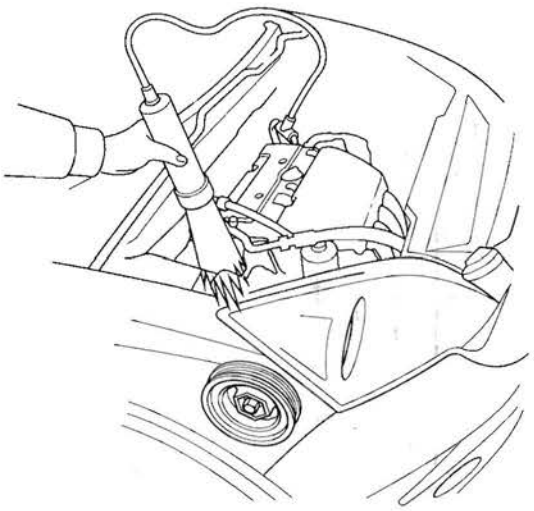

8. Aim the light toward the pointer (A) on the cam chain case. Check the ignition timing under a no load condition (headlights, blower fan, rear window defogger, and air conditioner are turned off).

Ignition Timing:
8 °±2 °BTDC (RED mark (B)) at idle in P or N position

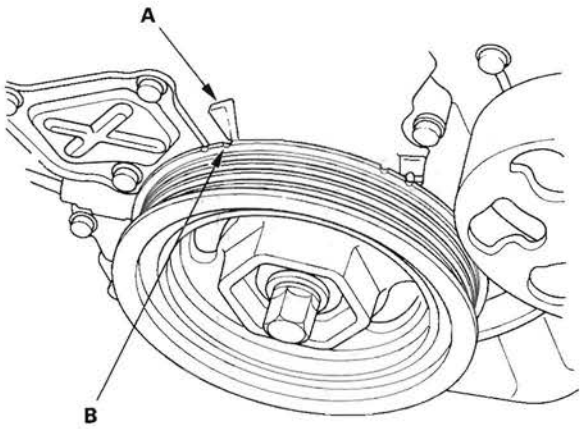

9. If the ignition timing differs from the specification, check the cam timing. If the cam timing is OK, update the PCM, if it does not have the latest software (see page 11-7), or substitute a known-good PCM (see page 11-8), then recheck. If the system works properly, and the PCM was substituted, replace the original PCM (see page 11-219).
10. Disconnect the HDS and the timing light.

Ignition Coil Removal/Installation

1. Remove the ignition coil cover (A), disconnect the ignition coil connectors (B), then remove the ignition coils (C).

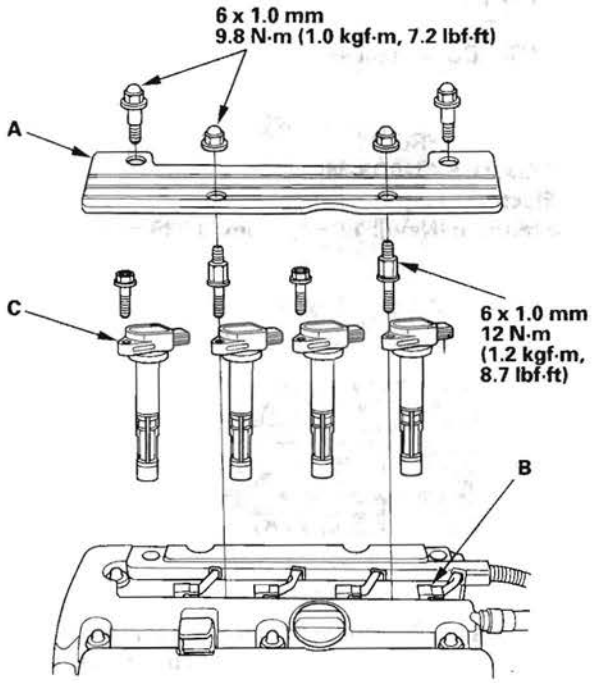

2. Install the ignition coils in the reverse order of removal.

Spark Plug Inspection

1. Remove the spark plugs, and inspect the electrodes and ceramic insulator.

   - Burned or worn electrodes may be caused by these conditions:
     - Advanced ignition timing
     - Loose spark plug
     - Plug heat range too hot
     - Insufficient cooling

   - Fouled plugs may be caused by these conditions:
     - Retarded ignition timing
     - Oil in combustion chamber
     - Incorrect spark plug gap
     - Plug heat range too cold
     - Excessive idling/low speed running
     - Clogged air cleaner element
     - Deteriorated ignition coils

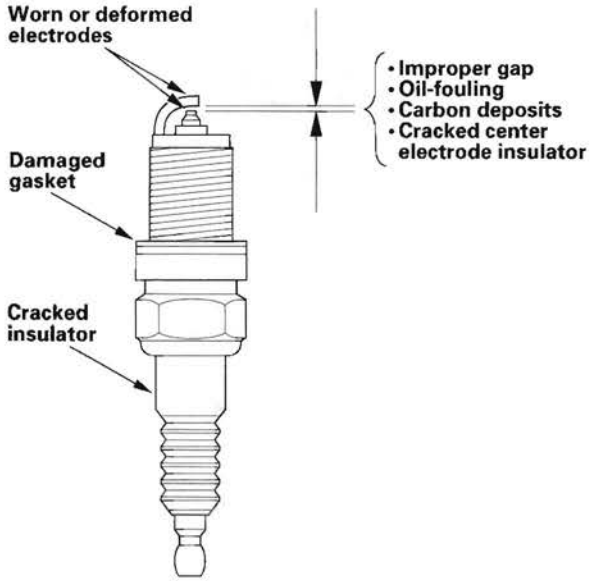

2. If the spark plug electrode is dirty or contaminated, clean the electrode with a plug cleaner.

   NOTE:
   - Do not use a wire brush or scrape the iridium electrode since this will damage the electrode.
   - When using a sand blaster spark plug cleaner, do not clean for more than 20 seconds to avoid damaging the electrode.

3. Replace the plug at the specified interval, or if the center electrode is rounded (A), or if the spark plug gap (B) is out of specification. Use only the listed spark plugs.

   NOTE: Do not adjust the gap of iridium tip plugs.

   Spark Plugs
   NGK: IZFR6K11
   DENSO: SKJ20DR-M11
   Electrode Gap
   Standard (New): 1.0—1.1 mm (0.039—0.043 in.)

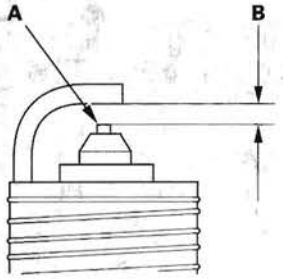

4. Apply a small amount of anti-seize compound to the plug threads, and screw the plugs into the cylinder head, finger-tight. Then torque them to 18 N·m (1.8 kgf·m, 13 lbf·ft).

Component Location Index

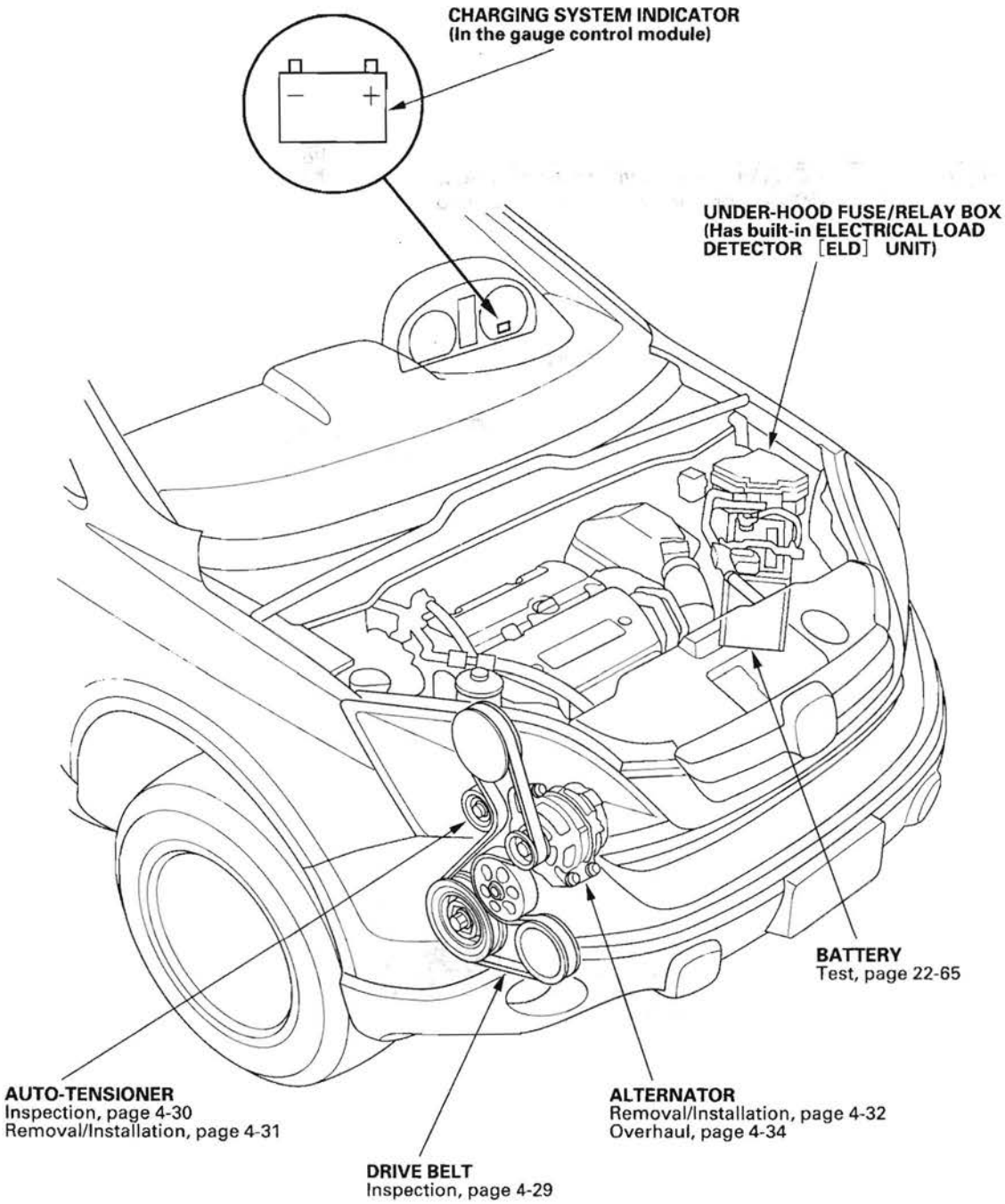

Symptom Troubleshooting Index

Symptom	Diagnostic procedure	Also check for
Charging system indicator does not come on with the ignition switch ON (II)	Troubleshoot the charging system indicator circuit (see page 4-24).	
Charging system indicator stays on	1. Check for PGM-FI DTCs (see page 11-3). 2. Troubleshoot the charging system indicator circuit (see page 4-24). 3. Check for a broken drive belt (see page 4-29). 4. Check the drive belt auto-tensioner (see page 4-30).	
Battery discharged	1. Check for excessive parasitic electrical current draw. 2. Check for a broken drive belt (see page 4-29). 3. Check the drive belt auto-tensioner (see page 4-30). 4. Troubleshoot the alternator and regulator circuit (see page 4-26). 5. Check for a poor connection at the battery terminal. 6. Test the battery (see page 22-65).	
Battery overcharged	1. Troubleshoot the alternator and regulator circuit (see page 4-26). 2. Test the battery (see page 22-65).	

Circuit Diagram

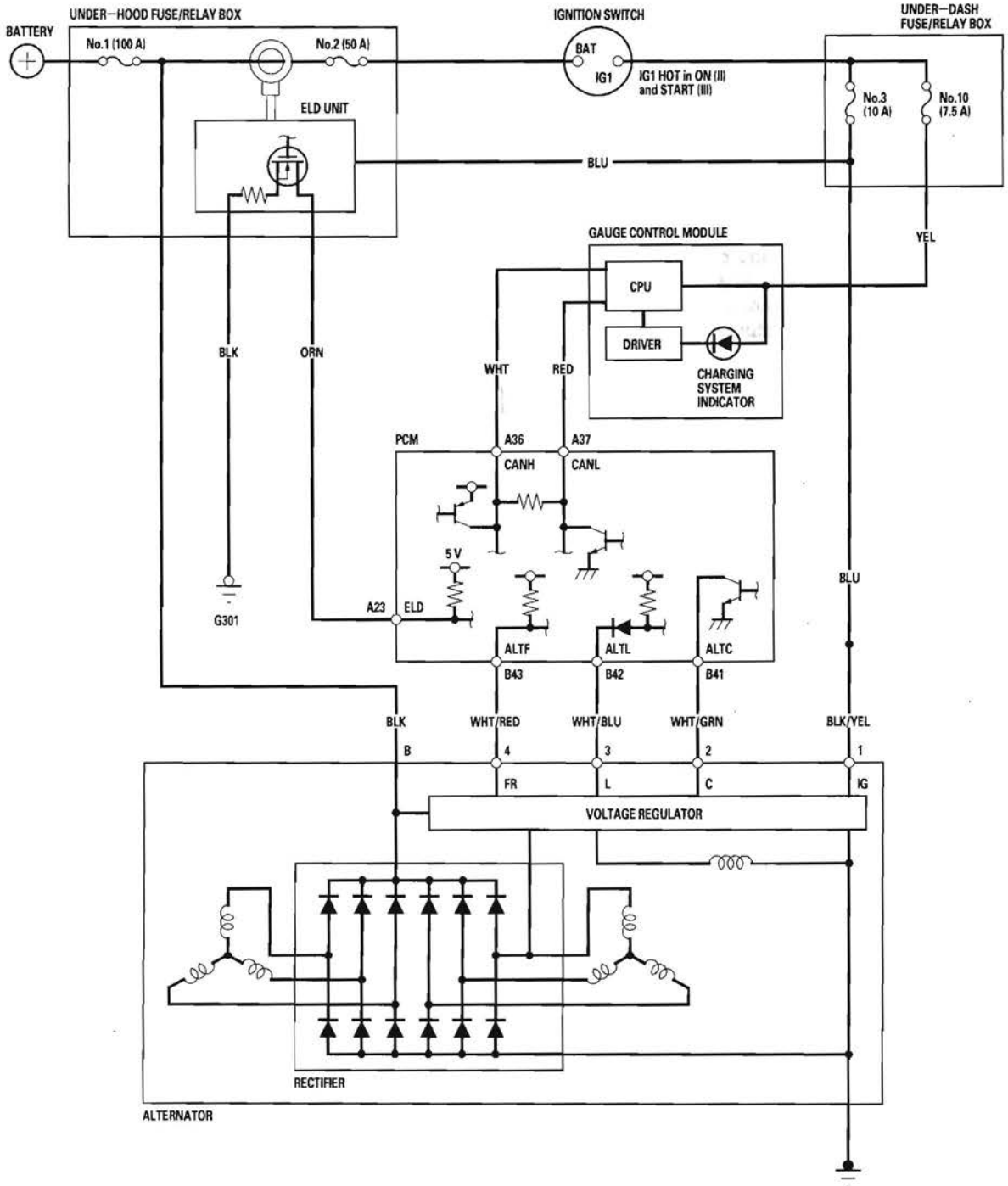

Charging System Indicator Circuit Troubleshooting

1. Turn the ignition switch ON (II).

   Does the charging system indicator come on?

   YES—Go to step 2.

   NO—Go to step 14.

2. Start the engine. Hold the engine speed at 2,000 rpm for 1 minute.

   Does the charging system indicator go off?

   YES—Charging system indicator circuit is OK. Go to the alternator and regulator circuit troubleshooting (see page 4-26). ■

   NO—Go to step 3.

3. Do the gauge control module self-diagnostic function procedure (see page 22-229).

   Does the charging system indicator flash?

   YES—Go to step 4.

   NO—Replace the gauge control module (see page 22-248). ■

4. Turn the ignition switch OFF.

5. Disconnect the alternator 4P connector.

6. Turn the ignition switch ON (II).

   Does the charging system indicator go off?

   YES—Replace the alternator (see page 4-32), or repair the alternator (see page 4-34). ■

   NO—Go to step 7.

7. Turn the ignition switch OFF.

8. Connect the Honda Diagnostic System (HDS) to the data link connector (DLC) (see step 2 on page 11-3).

9. Turn the ignition switch ON (II).

10. Make sure the HDS communicates with the vehicle and the powertrain control module (PCM). If it doesn't communicate, troubleshoot the DLC circuit (see page 11-197).

11. Jump the SCS line with the HDS, then turn the ignition switch OFF.

    NOTE: This step must be done to protect the PCM from damage.

12. Disconnect PCM connector B (44P).

13. Check for continuity between PCM connector terminal B42 and body ground.

PCM CONNECTOR B (44P)

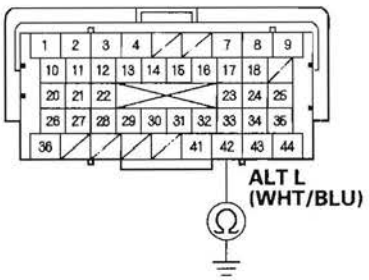

Terminal side of female terminals

Is there continuity?

YES—Repair short in the wire between the alternator and the PCM. ■

NO—Substitute a known-good PCM (see page 11-8), then recheck. If the symptom/indication goes away with a known-good PCM, replace the original PCM (see page 11-219). ■

14. Do the gauge control module self-diagnostic function procedure (see page 22-229).

    Does the charging system indicator flash?

    YES—Go to step 15.

    NO—Replace the gauge control module (see page 22-248). ■

15. Turn the ignition switch OFF.

16. Disconnect the alternator 4P connector.

17. Connect alternator 4P connector terminal No. 3 to body ground with a jumper wire.

ALTERNATOR 4P CONNECTOR

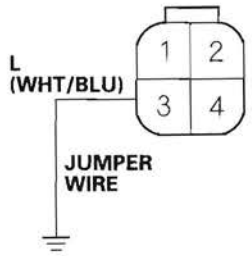

Wire side of female terminals

18. Turn the ignition switch ON (II).

    Does the charging system indicator come on?

    YES—Replace the alternator (see page 4-32), or repair the alternator (see page 4-34). ■

    NO—Leave the jumper connected from step 17, and go to step 19.

19. Connect the HDS to the DLC (see step 2 on page 11-3).

20. Turn the ignition switch ON (II).

21. Make sure the HDS communicates with the vehicle and the PCM. If it doesn't communicate, troubleshoot the DLC circuit (see page 11-197).

22. Jump the SCS line with the HDS, then turn the ignition switch OFF.

    NOTE: This step must be done to protect the PCM from damage.

23. Disconnect PCM connector B (44P).

24. Check for continuity between PCM connector terminal B42 and body ground.

PCM CONNECTOR B (44P)

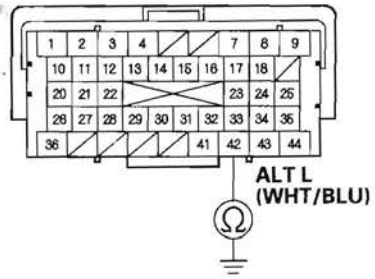

Terminal side of female terminals

Is there continuity?

YES—Substitute a known-good PCM (see page 11-8), then recheck. If the symptom/indication goes away with a known-good PCM, replace the original PCM (see page 11-219). ■

NO—Repair open in the wire between the alternator and the PCM. ■

Alternator and Regulator Circuit Troubleshooting

1. Make sure the battery connections are good and the battery is sufficiently charged.

2. Connect a VAT-40 (or equivalent tester), and turn the selector switch to position 1 (starting).

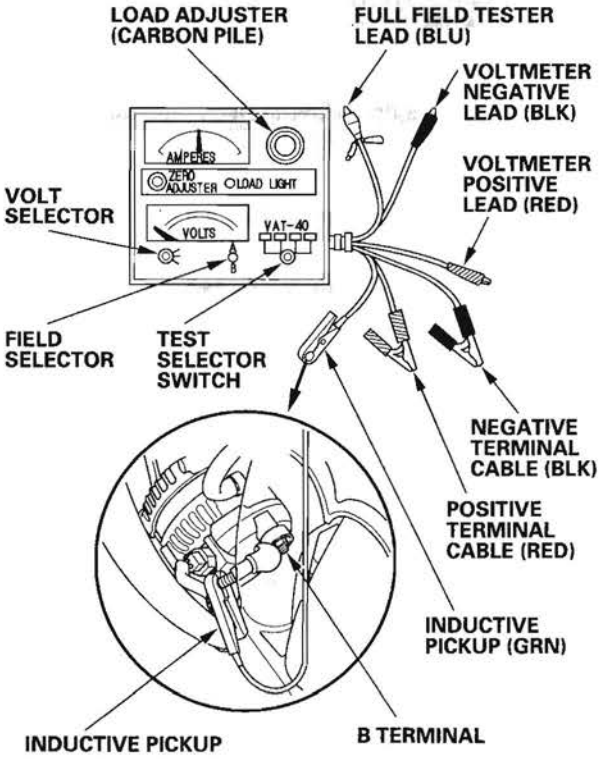

3. Start the engine. Hold the engine speed at 3,000 rpm with no load until the radiator fan comes on, then let it idle.

4. Raise the engine speed to 2,000 rpm, and hold it there.

   Is the voltage over 15.1 V?

   YES—Replace the alternator (see page 4-32), or rear housing assembly (see page 4-34). ■

   NO—Go to step 5.

5. Release the accelerator pedal, and let the engine idle.

6. Make sure all accessories are turned off. Turn the selector switch to position 2 (charging).

7. Remove the inductive pickup, and zero the ammeter.

8. Place the inductive pickup over the B terminal wire of the alternator so the arrow points away from the alternator.

9. Raise the engine speed to 2,000 rpm, and hold it there.

   Is the voltage less than 13.5 V?

   YES—Go to alternator control circuit troubleshooting (see page 4-27). ■

   NO—Go to step 10.

10. Apply a load with the VAT-40 until the battery voltage drops within 12—13.5 V.

    Is the amperage 87.5 A or more?

    YES—The charging system is OK. ■

    NOTE: If the charging system indicator is still on, replace the alternator (see page 4-32).

    NO—Replace the alternator (see page 4-32), or repair the alternator (see page 4-34). ■

Alternator Control Circuit Troubleshooting

1. Connect the Honda Diagnostic System (HDS) to the data link connector (DLC) (see step 2 on page 11-3).
2. Turn the ignition switch ON (II).
3. Make sure the HDS communicates with the vehicle and the powertrain control module (PCM). If it doesn't, troubleshoot the DLC circuit (see page 11-197).
4. Check for DTCs (see page 11-3). If a DTC is present, diagnose and repair the cause before continuing with this test.
5. Disconnect the alternator 4P connector from the alternator.
6. Start the engine, and turn on the headlights to high beam.
7. Measure the voltage between alternator 4P connector terminal No. 2 and the positive terminal of the battery.

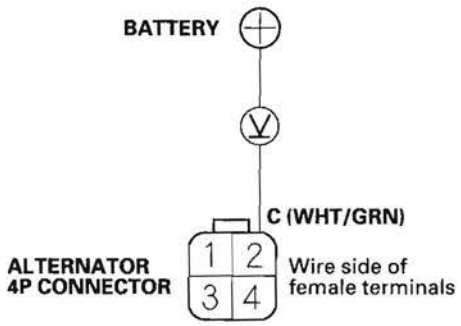

Is there 1 V or less?

YES—Go to step 11.

NO—Go to step 8.

8. Jump the SCS line with the HDS, then turn the ignition switch OFF.

   NOTE: This step must be done to protect the PCM from damage.

9. Disconnect PCM connector B (44P).
10. Check for continuity between PCM connector terminal B41 and body ground.

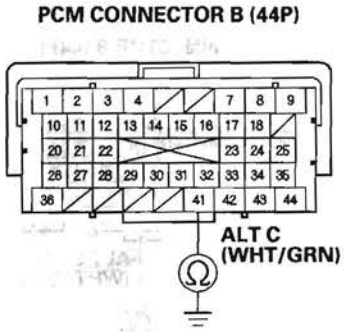

Terminal side of female terminals

Is there continuity?

YES—Repair short in the wire between the alternator and the PCM. ■

NO—Update the PCM if it does not have the latest software (see page 11-7), then recheck. If the problem is still present substitute a known good PCM (see page 11-8), then recheck. If the symptom/indication goes away with a known-good PCM, replace the original PCM (see page 11-219). ■

11. Jump the SCS line with the HDS, then turn the ignition switch OFF.

    NOTE: This step must be done to protect the PCM from damage.

12. Disconnect PCM connector B (44P).

(cont'd)

Alternator Control Circuit Troubleshooting (cont'd)

13. Check for continuity between PCM connector terminal B41 and alternator 4P connector terminal No. 2.

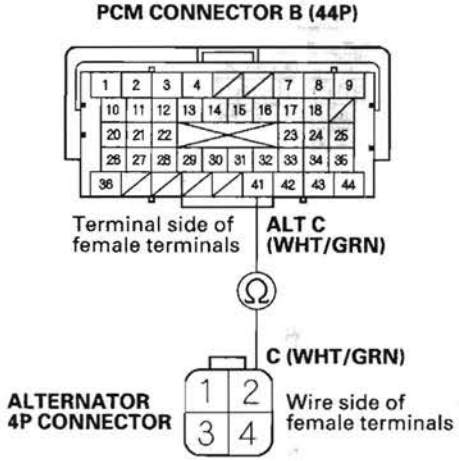

Is there continuity?

YES—Replace the alternator (see page 4-32), or repair the alternator (see page 4-34). ■

NO—Repair open in the wire between the alternator and the PCM. ■

Drive Belt Inspection

1. Inspect the belt for cracks and damage. If the belt is cracked or damaged, replace it.

2. Check that the auto-tensioner indicator (A) is within the standard range (B) as shown. If it is out of the standard range, replace the drive belt (see page 4-29).

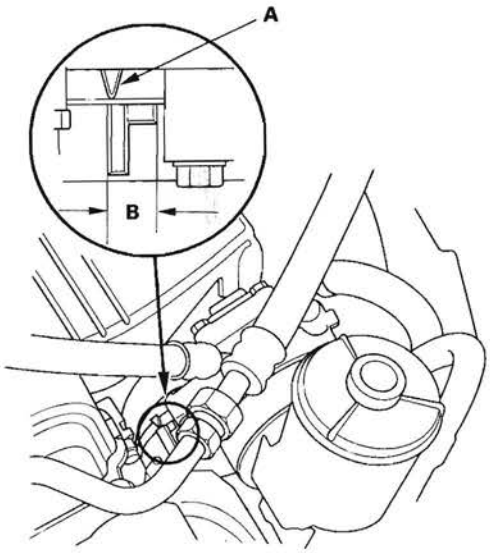

Drive Belt Removal/Installation

Special Tools Required
Belt tension release tool Snap-on YA9317 or equivalent, commercially available

1. Move the auto-tensioner (A) with the belt tension release tool to relieve tension from the drive belt, then remove the drive belt.

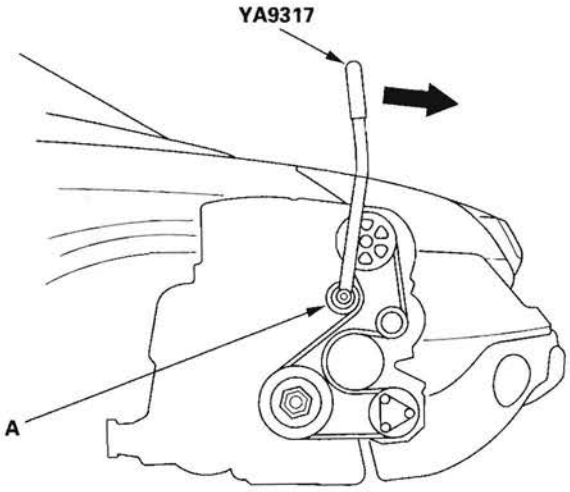

2. Install the new belt in the reverse order of removal.

Drive Belt Auto-tensioner Inspection

Special Tools Required
Belt tension release tool Snap-on YA9317 or equivalent, commercially available

1. Turn the ignition switch ON (II), and make sure to turn the A/C switch OFF. Turn the ignition switch OFF.

2. Check the position of the auto-tensioner indicator's pointer (A). Start the engine then check the position again with the engine idling. If the position of the indicator moves or fluctuates very much, replace the auto-tensioner (see page 4-31).

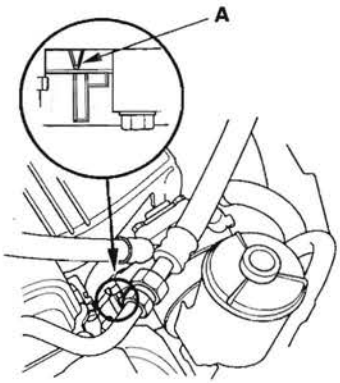

3. Check for abnormal noise from the tensioner pulley. If you hear abnormal noise, replace the tensioner pulley.

4. Remove the drive belt (see page 4-29).

5. Move the auto-tensioner within its limit with the belt tension release tool in the direction shown. Check that the tensioner moves smoothly and without any abnormal noise. If the tensioner does not move smoothly or you hear abnormal noise, replace the auto-tensioner.

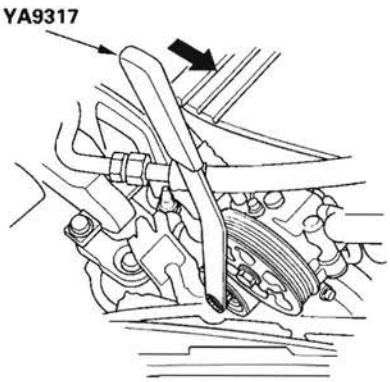

6. Remove the auto-tensioner (see page 4-31).

7. Clamp the auto-tensioner (A) by using two 8 mm bolts (B) and a vise (C) as shown. Do not clamp the auto-tensioner itself.

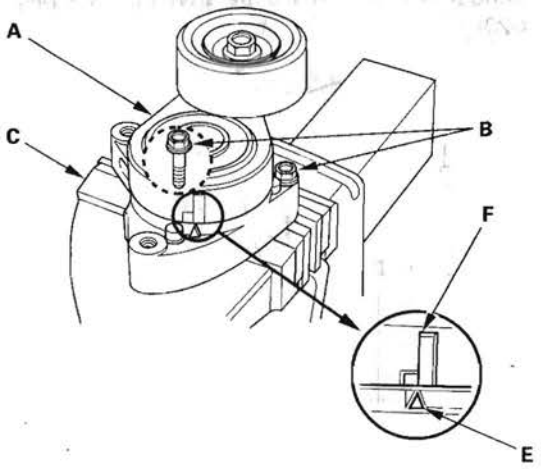

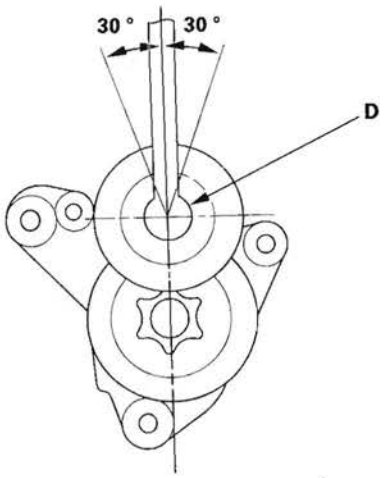

8. Set the torque wrench (D) on the pulley bolt, and align it as shown.

9. Align the indicator (E) on the tensioner base with center mark (F) on the tensioner arm by using the torque wrench, and measure the torque. If the torque value is out of specification, replace the auto-tensioner.

   NOTE: If the indicator exceeds the center mark, recheck the torque.

   Auto-tensioner Spring Torque:
   32.5—39.7 N·m (3.31—4.05 kgf·m, 23.9—29.3 lbf·ft)

Drive Belt Auto-tensioner Removal/Installation

1. Remove the drive belt (see page 4-29).
2. Remove the power steering (P/S) fluid reservoir from the holder.
3. Remove the P/S pump (A) without disconnecting the P/S hoses, then remove the P/S hose from the clamp (B).

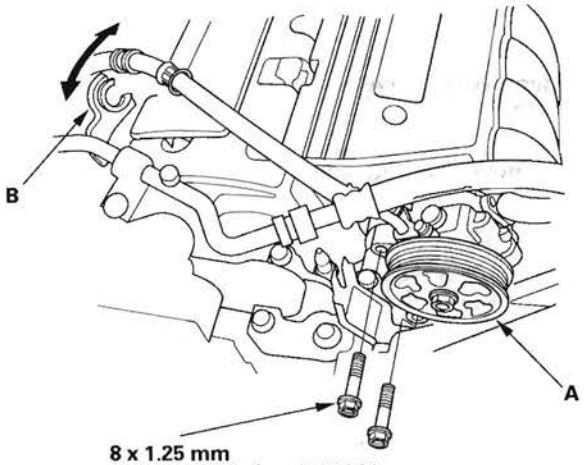

4. Remove the tensioner pulley bolt (A), then remove the tensioner pulley (B).

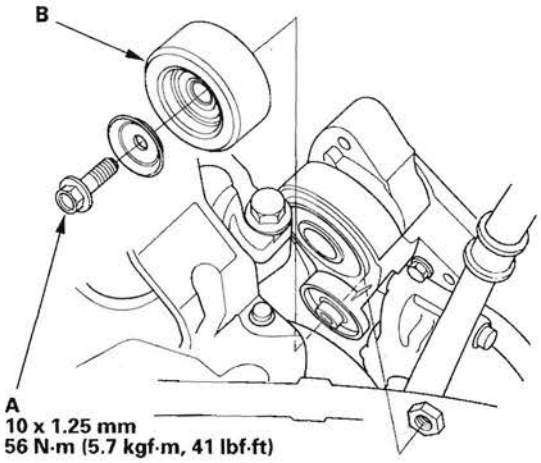

5. Remove the auto-tensioner.

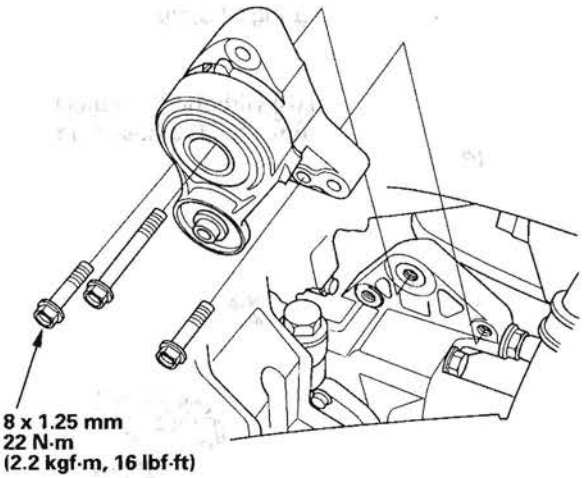

6. Install the auto-tensioner in the reverse order of removal.

Tensioner Pulley Replacement

1. Remove the drive belt (see page 4-29).
2. Remove the power steering (P/S) fluid reservoir from the holder.
3. Remove the P/S pump (A) without disconnecting the P/S hoses, then remove the P/S hose from the clamp (B).

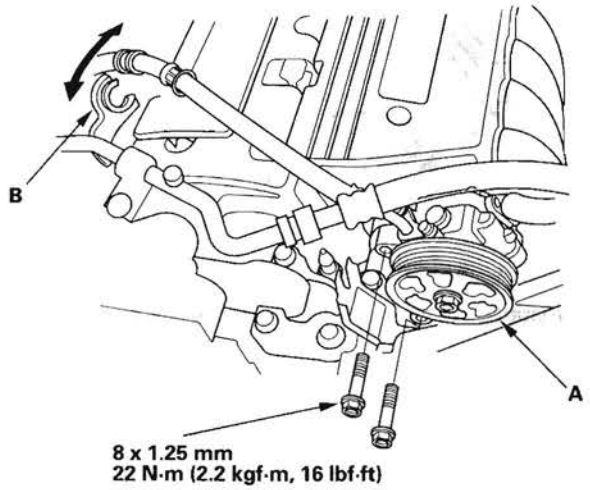

4. Remove the tensioner pulley bolt (A), then remove the tensioner pulley (B).

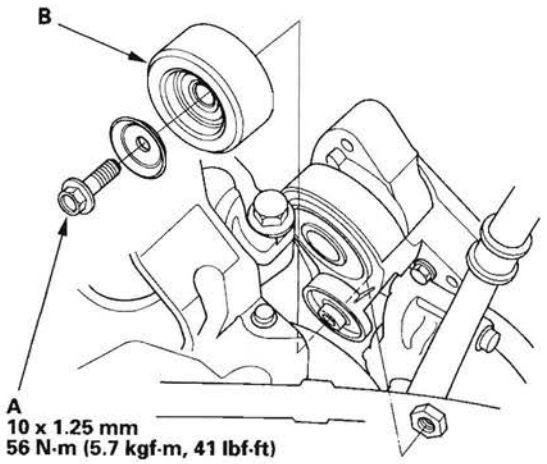

5. Install the tensioner pulley in the reverse order of removal.

Alternator Removal and Installation

Removal

1. Make sure you have the anti-theft code for the audio system and the navigation system (if equipped), then write down the XM radio presets.
2. Disconnect the negative cable from the battery first, then disconnect the positive cable.
3. Remove the drive belt (see page 4-29).
4. Remove the drive belt auto-tensioner (see page 4-31).
5. Remove the three bolts securing the alternator.

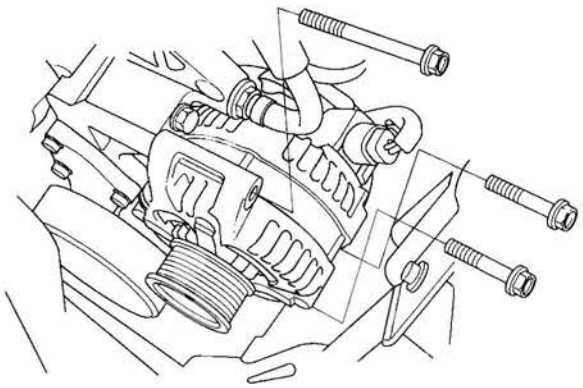

6. Disconnect the alternator connector (A), BLK wire (B), and harness clamp (C) from the alternator, then remove the alternator.

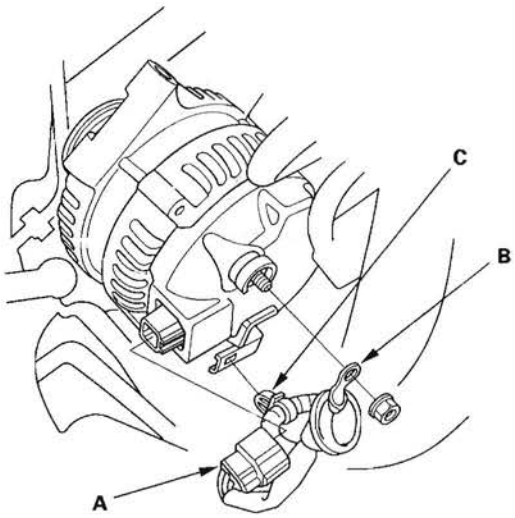

Installation

1. Connector the alternator connector (A), BLK wire (B), and harness clamp (C) to the alternator.

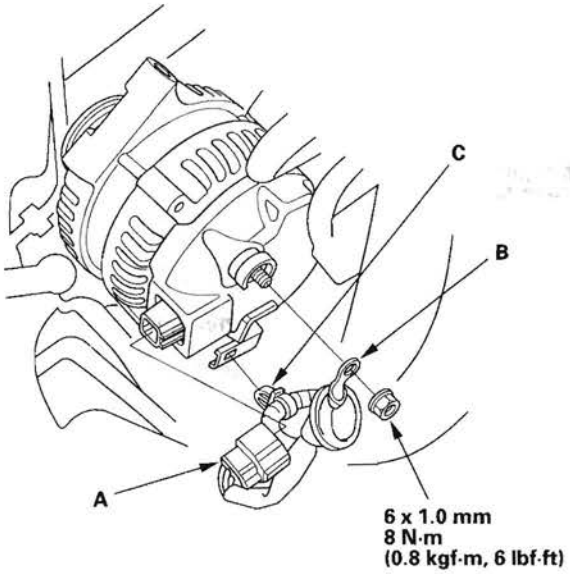

2. Tighten the three bolts securing the alternator.

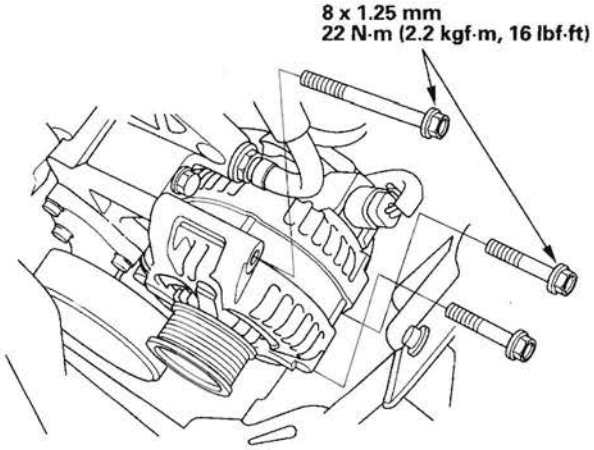

3. Install the drive belt auto-tensioner (see page 4-31).
4. Install the drive belt (see page 4-29).
5. Connect the positive cable to the battery first, then connect the negative cable.
6. Enter the anti-theft code for the audio system and the navigation system (if equipped), then enter the XM radio presets.
7. Set the clock.

Alternator Overhaul

Exploded View

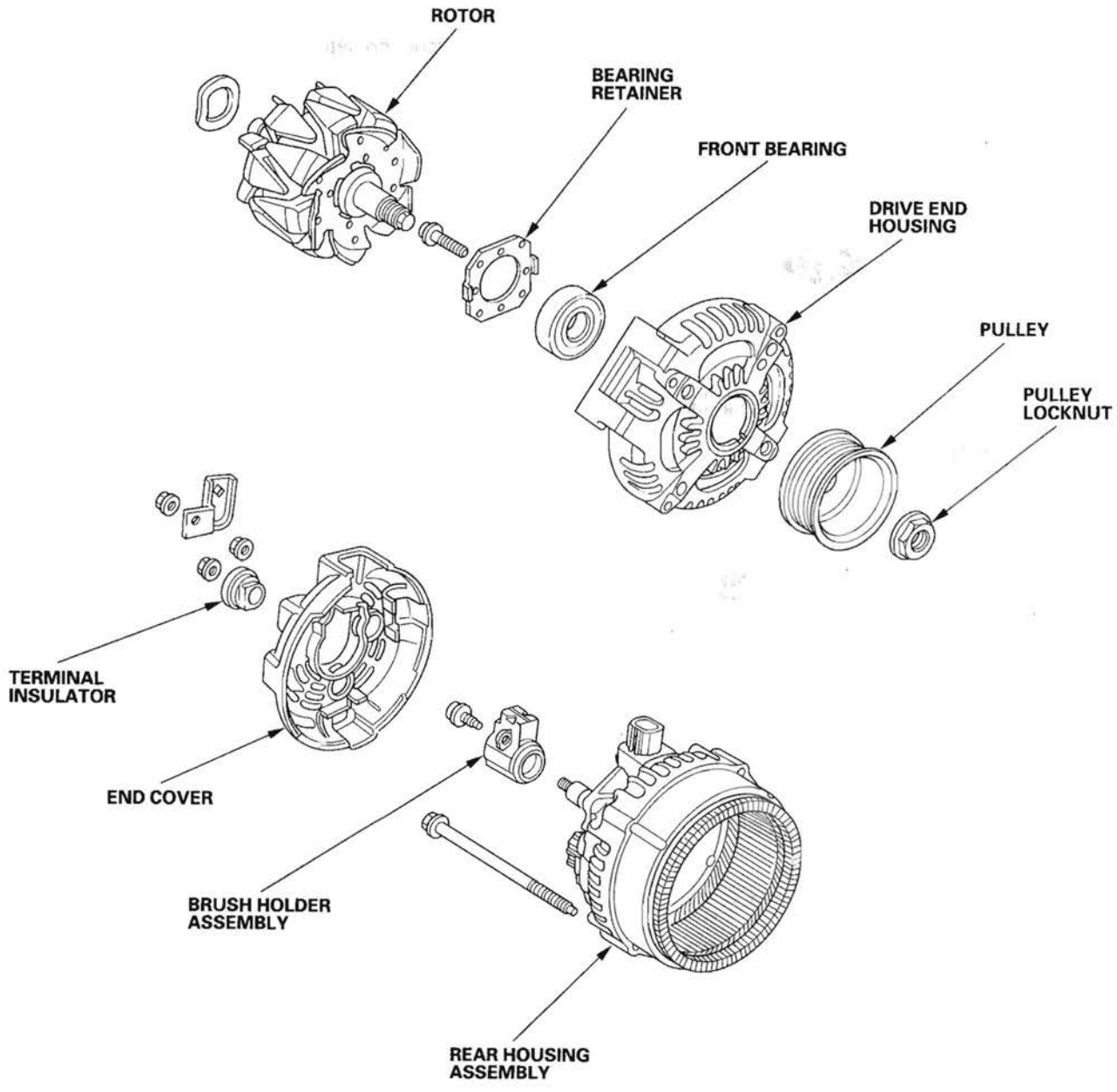

Special Tools Required
- Driver 07749-0010000
- Attachment, 42 x 47 mm 07746-0010300

NOTE: Refer to the Exploded View as needed during this procedure.

1. Test the alternator and regulator before you remove them (see page 4-26).

2. Remove the alternator (see page 4-32).

3. If the front bearing needs replacing, remove the pulley locknut with a 10 mm wrench (A) and a 22 mm wrench (B). If necessary, use an impact wrench.

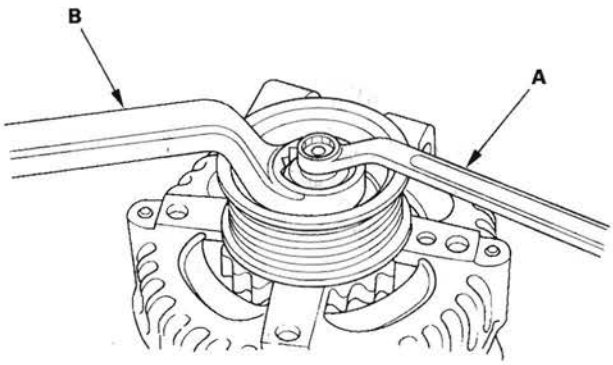

4. Remove the harness stay and the three flange nuts from the alternator.

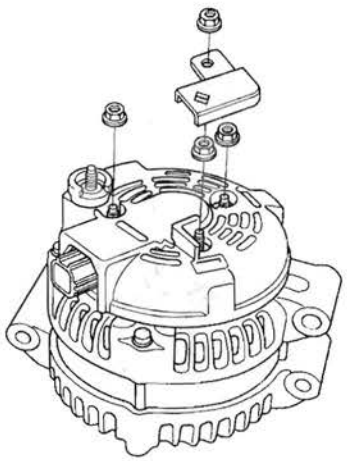

5. Remove the end cover.

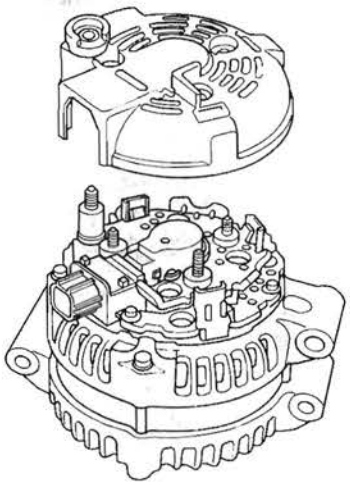

6. Remove the brush holder.

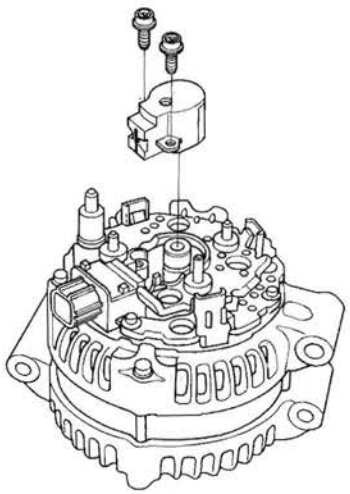

(cont'd)

Alternator Overhaul (cont'd)

7. Remove the four bolts, then remove the rear housing assembly (A), and washer (B).

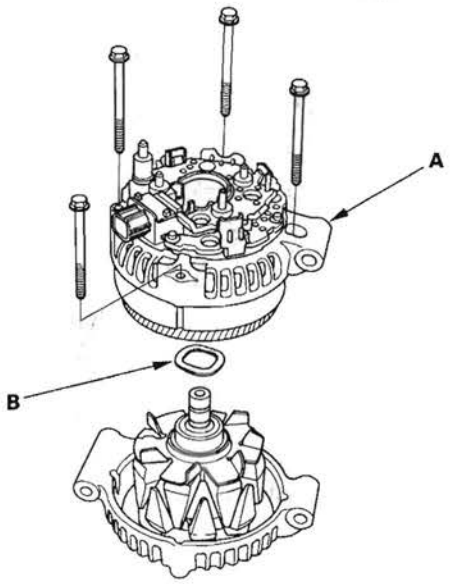

8. If you are not replacing the front bearing, go to step 13. Remove the rotor from the drive end housing.

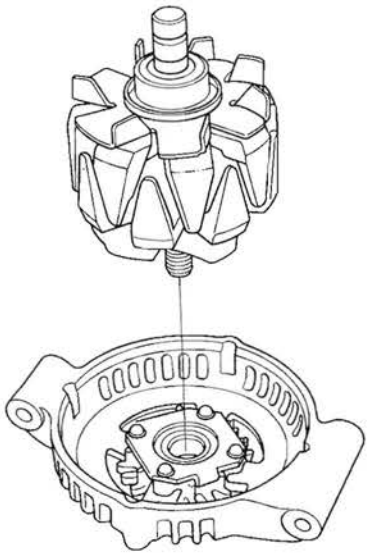

9. Inspect the rotor shaft for scoring, and inspect the bearing journal surface in the drive end housing for seizure marks.

   - If the rotor is damaged, replace the rotor assembly.
   - If the rotor is OK, go to step 10.

10. Remove the front bearing retainer plate.

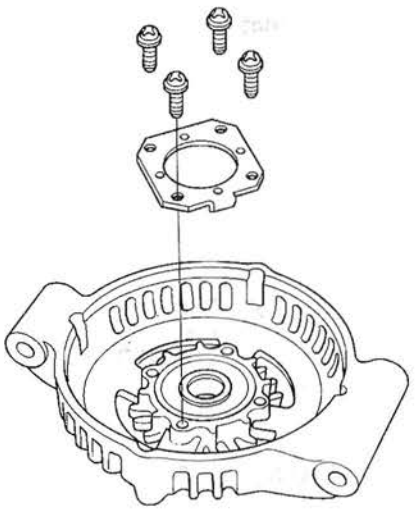

11. Drive out the front bearing with a brass drift and hammer.

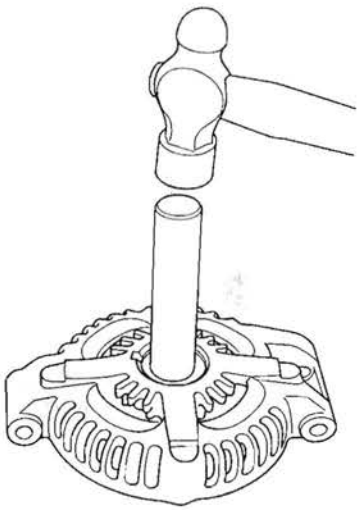

12. With a hammer, driver, and attachment, install a new front bearing in the drive end housing.

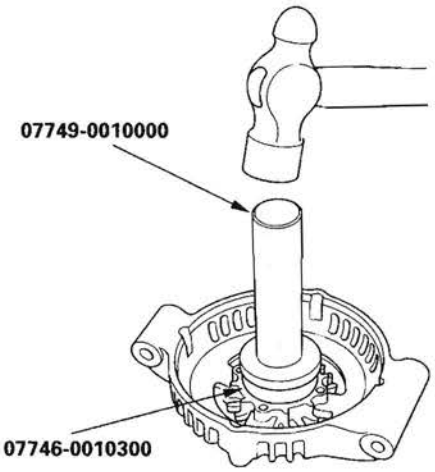

Alternator Brush Inspection

13. Measure the length of both brushes (A) with vernier calipers (B).

    - If either brush is shorter than the service limit, replace the brush holder assembly.
    - If brush length is OK, go to step 14.

Alternator Brush Length
Standard (New): 10.5 mm (0.41 in.)
Service Limit: 1.5 mm (0.06 in.)

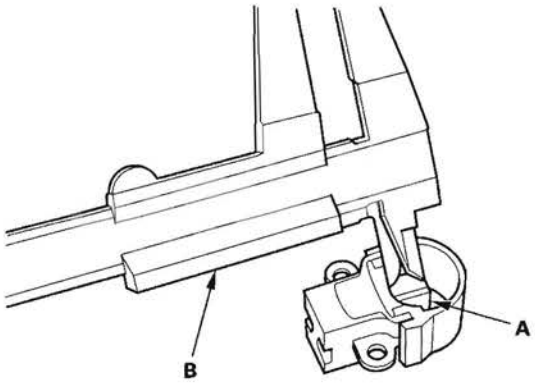

Rotor Slip Ring Test

14. Check for continuity between the slip rings (A).

    - If there is continuity, go to step 15.
    - If there is no continuity, replace the rotor assembly.

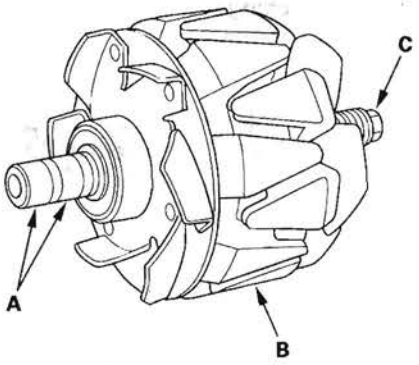

15. Check for continuity between each slip ring and the rotor (B) and the rotor shaft (C).

    - If there is no continuity, replace the rear housing assembly, and go to step 16.
    - If there is continuity, replace the rotor assembly.

(cont'd)

Alternator Overhaul (cont'd)

Alternator Reassembly

16. If you removed the pulley, put the rotor in the drive end housing, then tighten its locknut to 110 N·m (11.2 kgf·m, 81.0 lbf·ft).

17. Remove any grease or any oil from the slip rings.

18. Put the rear housing assembly and drive end housing/rotor assembly together, tighten the four through bolts.

19. Push the brushes (A) in, then insert a pin or drill bit (B) (about 1.6 mm (0.06 in.) diameter) to hold them there.

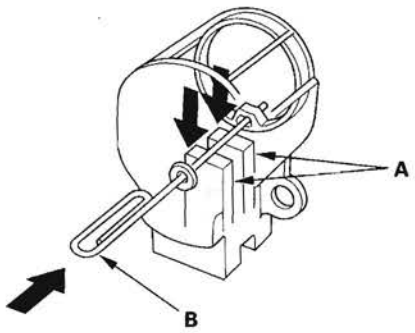

20. Install the brush holder, and pull out the pin.

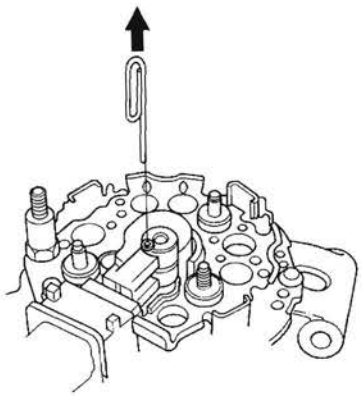

21. Install the end cover.

22. After assembling the alternator, turn the pulley by hand to make sure the rotor turns smoothly and without noise.

23. Install the alternator (see page 4-33) and drive belt (see page 4-29).

Component Location Index

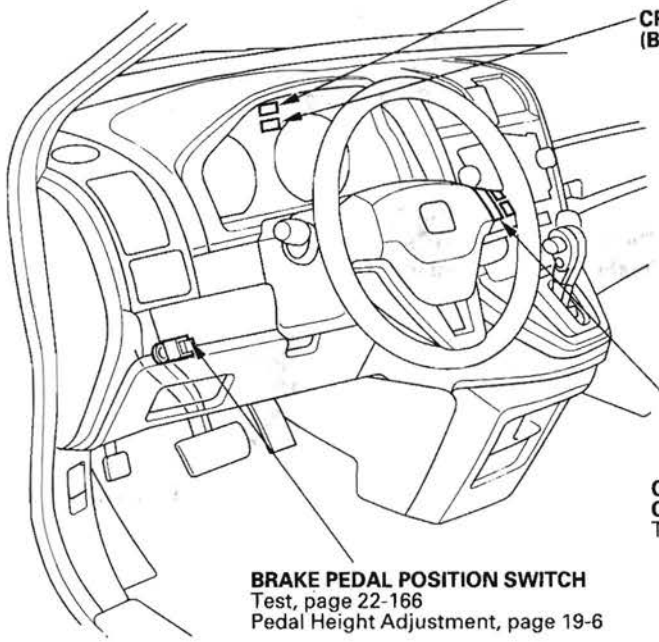

CRUISE MAIN INDICATOR
(Built into gauge control module)

CRUISE CONTROL INDICATOR
(Built into gauge control module)

CRUISE CONTROL COMBINATION SWITCH
Test/Replacement, page 4-45

BRAKE PEDAL POSITION SWITCH
Test, page 22-166
Pedal Height Adjustment, page 19-6

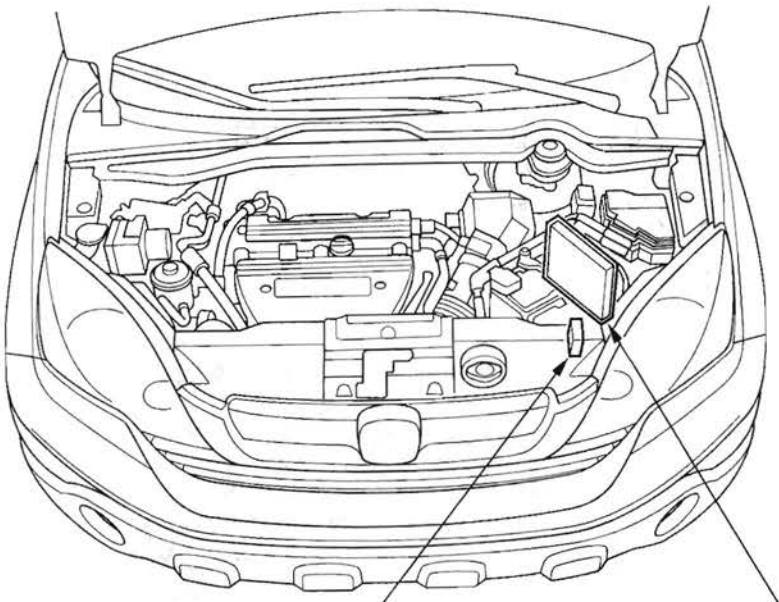

POWERTRAIN CONTROL MODULE (PCM)
Cruise Control Input Test, page 4-43

TRANSMISSION RANGE SWITCH
Test, page 14-292
Replacement, page 14-294

Symptom Troubleshooting Index

Symptom	Diagnostic procedure	Also check for
Cruise control cannot be set	1. Check for PGM-FI DTCs (see page 11-3). 2. Check the No. 3 (10 A) fuse in the under-dash fuse/relay box. 3. Do the cruise control input test (see page 4-43). 4. Do the cruise control combination switch test (see page 4-45).	
Cruise control can be set, but the cruise main indicator does not come on	1. Check for PGM-FI DTCs (see page 11-3). 2. Do the gauge control module self-diagnostic function procedure (see page 22-229). 3. Do the cruise control input test (see page 4-43). Test the cruise control main switch signal input.	Faulty gauge control module
Cruise control can be set, but the cruise control indicator does not come on	1. Check for PGM-FI DTCs (see page 11-3). 2. Do the gauge control module self-diagnostic function (see page 22-229). 3. Do the cruise control input test (see page 4-43). Test the cruise control indicator signal input.	Faulty gauge control module
Vehicle does not decelerate or accelerate accordingly when the set/decel or resume/accel switch is pressed	1. Check for PGM-FI DTCs (see page 11-3). 2. Do the cruise control input test (see page 4-43). Test the cruise control set/decel and resume/accel switch signal input. 3. Do the cruise control combination switch test (see page 4-45).	Open circuit, loose or disconnected terminals: GRY, WHT or LT BLU, PUR
Set speed does not cancel when the brake pedal is pressed	1. Check for PGM-FI DTCs (see page 11-3). 2. Do the cruise control input test (see page 4-43). Test the brake pedal position switch signal input. 3. Do the brake pedal position switch test (see page 19-6).	• Short to power on the BRN wire • Faulty brake pedal position switch
Set speed does not cancel when the cruise control main switch is pressed	1. Check for PGM-FI DTCs (see page 11-3). 2. Do the cruise control input test (see page 4-43). Test the cruise control main switch signal input. 3. Do the cruise control combination switch test (see page 4-45).	Short to power on the LT GRN wire
Set speed does not cancel when the cancel switch is pressed	1. Check for PGM-FI DTCs (see page 11-3). 2. Do the cruise control input test (see page 4-43). Test the cruise control cancel switch signal input. 3. Do the cruise control combination switch test (see page 4-45).	Open circuit, loose or disconnected terminals: GRN, WHT or LT BLU, PUR

Symptom	Diagnostic procedure	Also check for
Set speed will not resume when the resume/accel switch is pressed (with the cruise control main switch turned on, and set speed temporarily canceled by pressing the brake pedal)	1. Check for PGM-FI DTCs (see page 11-3). 2. Check the brake pedal position switch adjustment (see page 19-6). 3. Do the cruise control input test (see page 4-43). Test the cruise control resume/accel switch signal input. Test the brake pedal position switch signal input. 4. Do the cruise control combination switch test (see page 4-45).	• Faulty brake pedal position switch • Open circuit, loose or disconnected terminals: LT BLU, PUR
With the ignition switch ON (II), and the lighting switch turned on, the cruise control combination switch illumination does not come on	Do the cruise control combination switch test (see page 4-45).	

Circuit Diagram

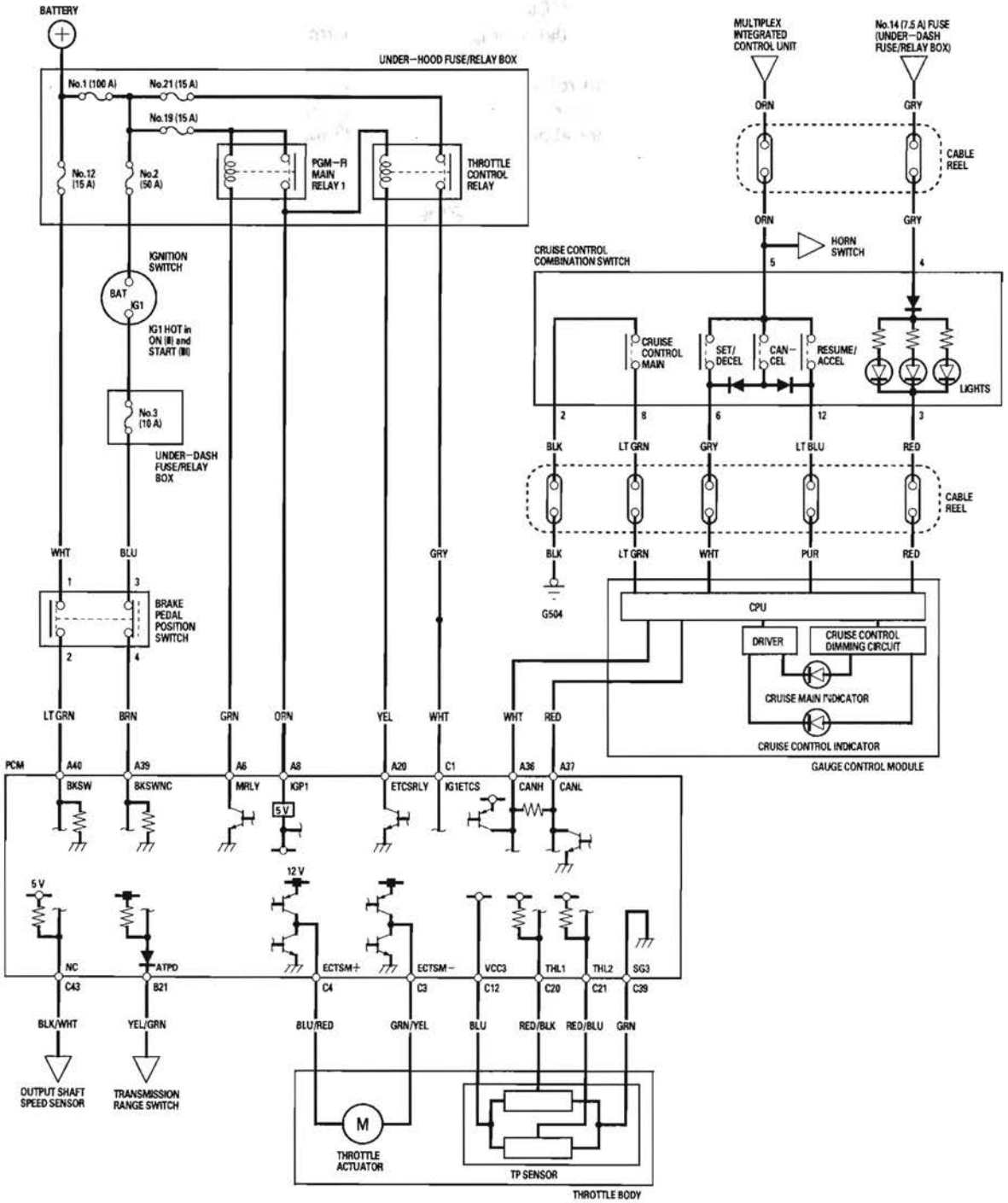

Cruise Control Input Test

1. Connect the Honda Diagnostic System (HDS) to the data link connector (DLC) (see step 2 on page 11-3).
2. Turn the ignition switch ON (II).
3. Make sure the HDS communicates with the vehicle and the powertrain control module (PCM). If it doesn't, troubleshoot the DLC circuit (see page 11-197).
4. Go to PGM-FI, and check for DTCs.
5. Do the following tests while monitoring parameters in the PGM-FI DATA LIST with the HDS.

   NOTE: Intermittent failures are often caused by loose circuit connections. While monitoring cruise control inputs, flex their circuits, and note if any of the test results change.

Signal to be tested	Test condition	Parameter: Desired result	Possible cause if result is not obtained
Brake switch signal	Brake pedal pressed, then released	CRUISE BRAKE SW should indicate OFF when the brake pedal is pressed and ON when the brake pedal is released.	• Faulty brake pedal position switch • Blown No. 3 (10 A) fuse in the under-dash fuse/relay box • An open in the wire between the PCM and the brake pedal position switch • A wire shorted to ground between the PCM and the brake pedal position switch
Transmission range switch signal	Shift lever in D	SHIFT/CLUTCH SW should indicate ON in P, R, N, 2, and 1 and OFF in D.	• Faulty transmission range switch • An open in the wire between the PCM and the transmission range switch • A wire shorted to ground between the PCM and the transmission range switch • Poor ground G101
Cruise control main switch signal	Cruise control main switch ON and OFF	CRUISE CONTROL MAIN SW should indicate ON when the cruise control main switch is turned ON and OFF when the cruise control main switch is turned OFF.	• Faulty cruise control main switch • An open in the wire between the gauge control module and the cruise control main switch • A wire shorted to ground between the gauge control module and the cruise control main switch
Set switch signal	Set/decel switch pressed and released	CRUISE CONTROL SET SW should indicate ON when the set/decel switch is pressed and OFF when the set/decel switch is released.	• Faulty cruise control combination switch • An open in the wire between the gauge control module and the cruise control combination switch • A wire shorted to ground between the gauge control module and the cruise control combination switch

(cont'd)

Cruise Control Input Test (cont'd)

Signal to be tested	Test condition	Parameter: Desired result	Possible cause if result is not obtained
Resume switch signal	Resume/accel switch pressed and released	CRUISE CONTROL RESUME SW should indicate ON when the resume/accel switch is pressed and OFF when the resume/accel switch is released.	• Faulty cruise control combination switch • An open in the wire between the gauge control module and the cruise control combination switch • A wire shorted to ground between the gauge control module and the cruise control combination switch
Cancel switch signal	Cancel switch pressed and released	CRUISE CONTROL CANCEL SW should indicate ON when the cancel switch is pressed and OFF when the cancel switch is released.	Faulty cruise control combination switch
Cruise control indicator signal	Start the engine, turn the cruise control main switch on, and drive the vehicle to speeds over 25 mph (40 km/h). Set and cancel the cruise control.	CRUISE INDICATOR should indicate ON when the cruise control is set and OFF when the cruise control is canceled.	Faulty gauge control module

Cruise Control Combination Switch Test/Replacement

SRS components are located in this area. Review the SRS component locations (see page 24-13) and the precautions and procedures (see page 24-15) before doing repairs or service.

1. Remove the steering wheel (see page 17-22).
2. Remove the screws (A). Disconnect the 12P connector (B), then remove the cruise control combination switch.

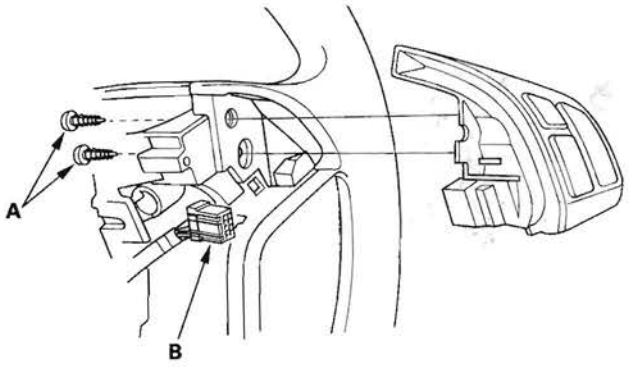

3. Check for continuity between the terminals in each switch position according to the table.
   - If there is continuity, and it matches the table, but switch failure occurred on the cruise control input test, check and repair the wire harness on the switch circuit.
   - If there is no continuity in one or more positions, replace the switch.

Terminal / Position	2	8	5		12	6
Cruise control main switch (ON)	○	○				
Cruise control main switch (OFF)						
Set/decel (PRESSED)			○			○
Resume/accel (PRESSED)			○		○	
Cancel (PRESSED)			○	▶		○
				▶	○	

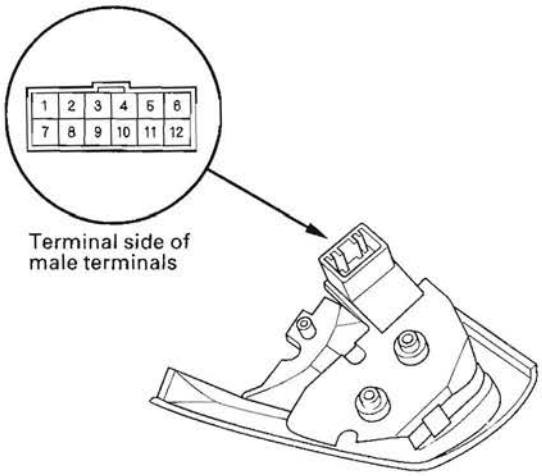

4. Check for continuity between the terminals in according to the table.
   - If there is continuity, and it matches the table, check and repair the wire harness on the switch circuit.
   - If there is no continuity in one or more positions, replace the switch.

4		3
○	▶ ⊗	○

Engine Mechanical

Engine Assembly

Special Tools 5-2
Engine Removal 5-3
Engine Installation 5-12
Side Engine Mount Replacement 5-22
Transmission Mount Replacement 5-24
Lower Torque Rod Replacement 5-26
Upper Torque Rod Replacement 5-27
Side Engine Mount Bracket Replacement 5-28

Special Tools

Ref. No.	Tool Number	Description	Qty
①	07AAK-SNAA120	Universal Eyelet	1

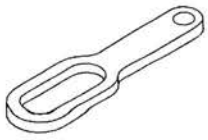

①

Engine Removal

Special Tools Required
- Universal eyelet 07AAK-SNAA120
- Engine hanger adapter VSB02C000015 *
- Front subframe adapter VSB02C000016 *
- CR-V engine hanger adapter VSB02C000032 *
- Engine support hanger, A and Reds AAR-T-12566 *

* : Available through American Honda Tool and Equipment Program, 1-888-424-6857

NOTE:
- Use fender covers to avoid damaging painted surfaces.
- To avoid damaging the wiring and terminals, unplug the wiring connectors carefully while holding the connector portion.
- Mark all wiring and hoses to avoid misconnection. Also, be sure that they do not contact other wiring or hoses, or interfere with other parts.

1. Make sure you have the anti-theft code for the audio system and the navigation system (if equipped), then write down the XM radio presets.

2. Remove the hood support rod, then use it as shown to prop the hood in the wide-open position.

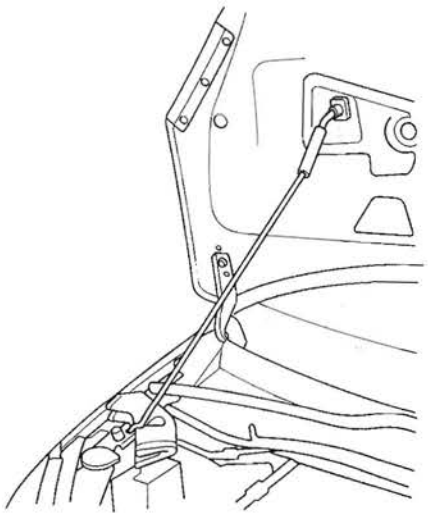

3. Relieve the fuel pressure (see page 11-317).

4. Disconnect the negative cable from the battery first, then disconnect the positive cable.

5. Remove the battery.

6. Remove the air cleaner housing assembly (see page 11-340).

7. Remove the harness clamp (A) and ground cable (B).

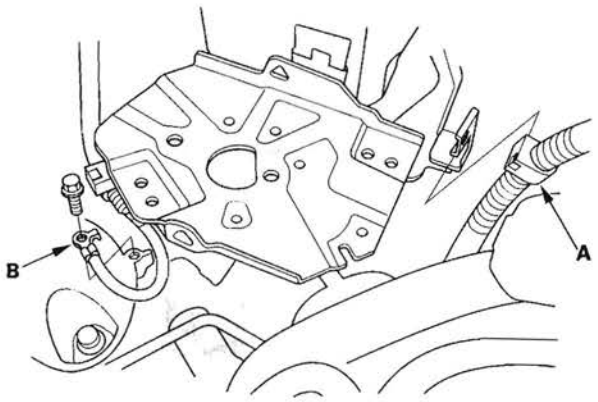

8. Remove the battery cables (A) from the under-hood fuse/relay box.

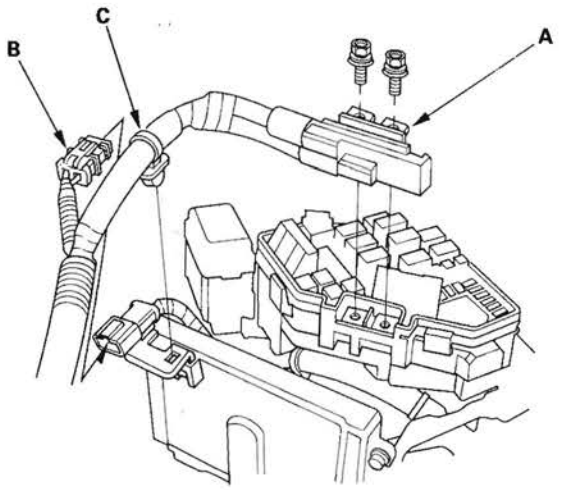

9. Disconnect the harness connector (B), and remove the harness clamp (C).

(cont'd)

Engine Removal (cont'd)

10. Remove the powertrain control module (PCM) cover (A), then remove the three bolts (B) securing the PCM.

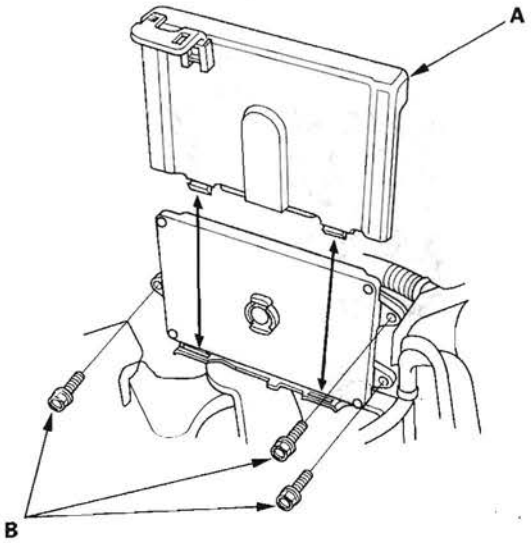

11. Disconnect the PCM connectors (A) and the engine wire harness connector (B).

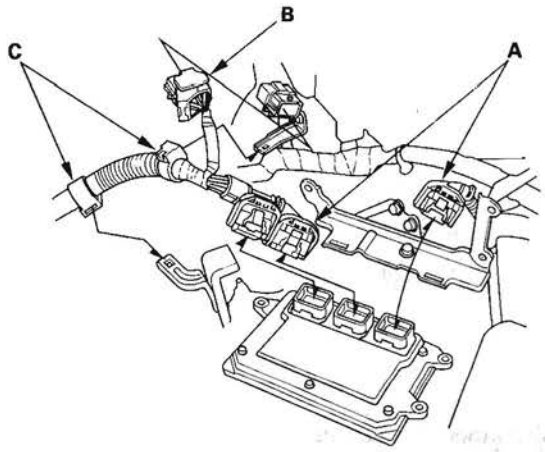

12. Remove the harness clamps (C).

13. Remove the harness clamp (A), then remove the PCM bracket (B).

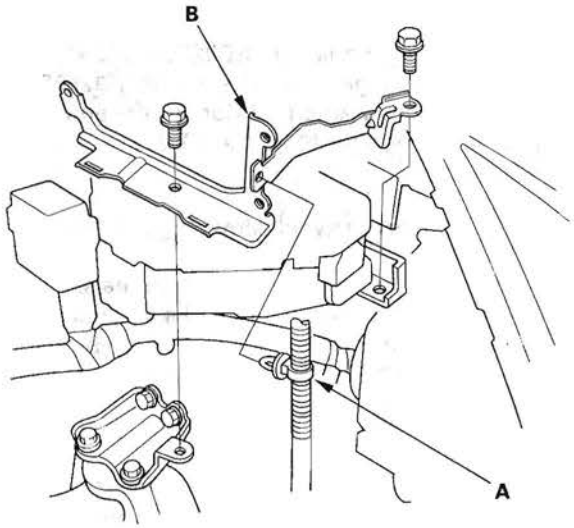

14. Remove the evaporative emission (EVAP) canister hose (A) and brake booster vacuum hose (B).

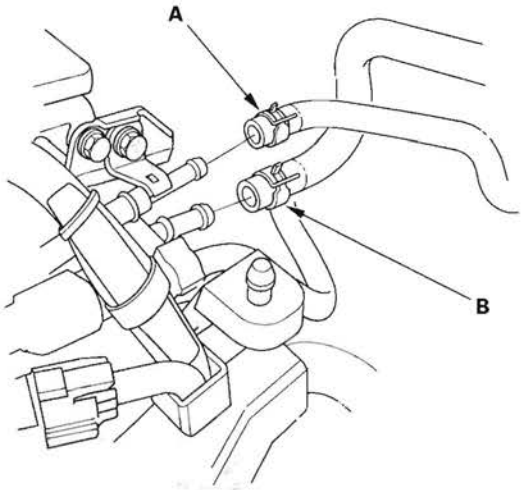

15. Remove the quick-connect fitting cover (A), then disconnect the fuel feed hose (see page 11-324).

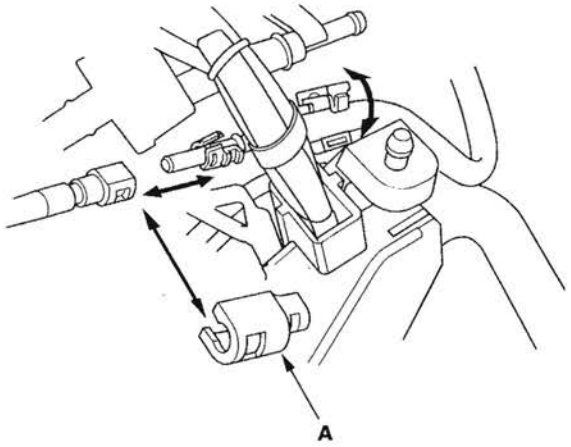

16. Remove the drive belt (see page 4-29).

17. Remove the power steering (P/S) pump (A) without disconnecting the P/S hoses, then remove the P/S hose from the clamp (B).

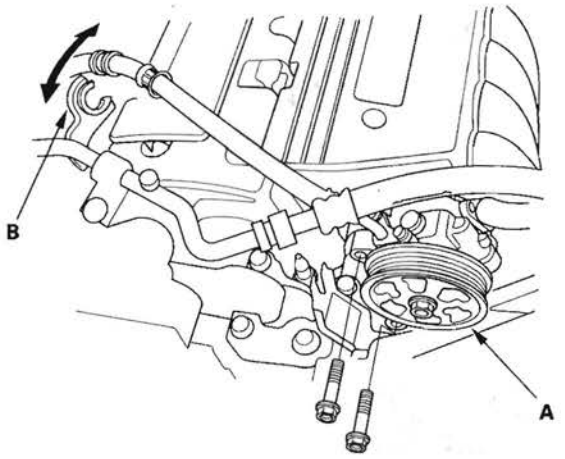

18. Remove the radiator cap.

19. Raise the vehicle on the lift to full height.

20. Remove the front wheels.

21. Remove the splash shield.

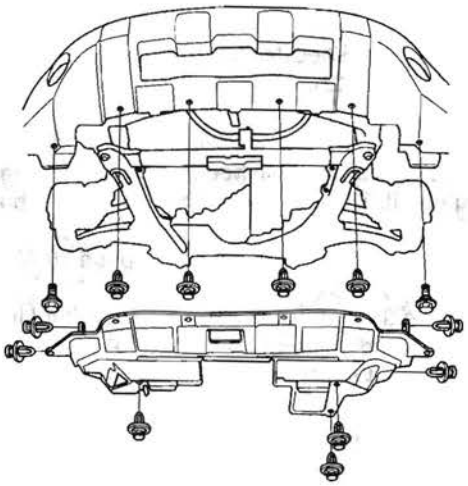

22. Loosen the drain plug in the radiator, and drain the engine coolant (see page 10-6).

23. Drain the engine oil (see page 8-10).

24. Drain the automatic transmission fluid (ATF) (see page 14-239).

25. Disconnect the air fuel ratio (A/F) sensor connector (A) and secondary heated oxygen sensor (secondary HO2S) connector (B).

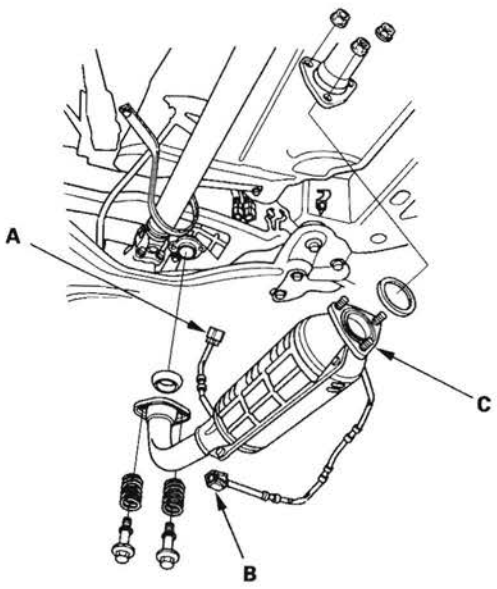

26. Remove the three way catalytic converter (TWC) (C).

(cont'd)

Engine Removal (cont'd)

27. Remove the shift cable (see step 34 on page 14-251).

28. Separate the knuckles from the lower arms (see page 18-12).

29. Remove the driveshafts (see step 7 on page 16-5). Coat all precision-finished surfaces with clean engine oil. Tie plastic bags over the driveshaft ends.

30. Remove the propeller shaft (see page 16-40).

31. Remove the bolt (A) securing the P/S fluid line bracket, and unclamp the P/S fluid line clamps (B) on the front subframe.

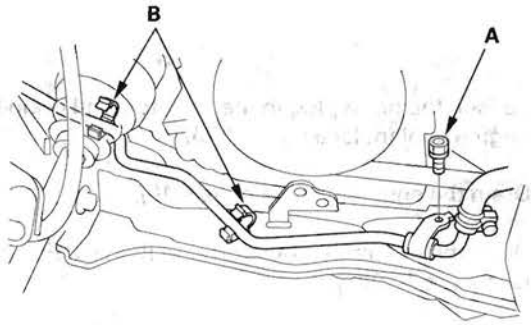

32. Remove the bolts securing the left steering gearbox mounting bracket.

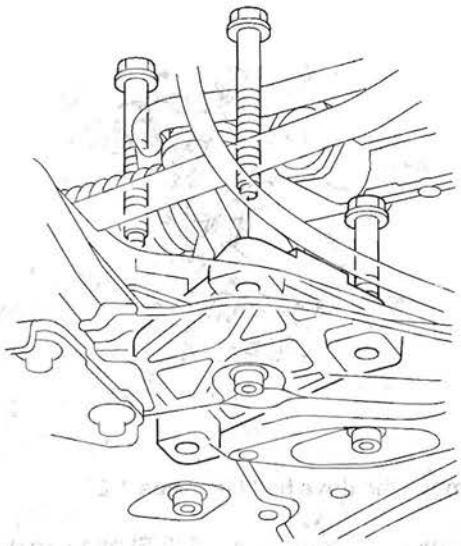

33. Remove the bolts securing the right steering gearbox mounting brackets.

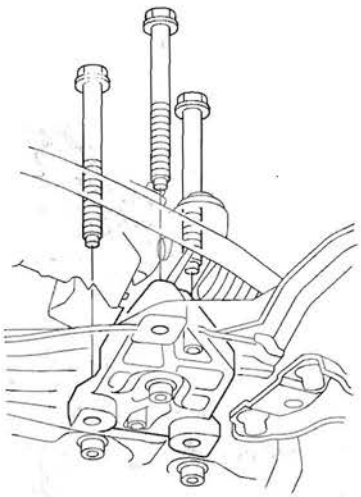

34. Disconnect the A/C compressor clutch connector (A), then remove the A/C compressor (B) without disconnecting the A/C hoses.

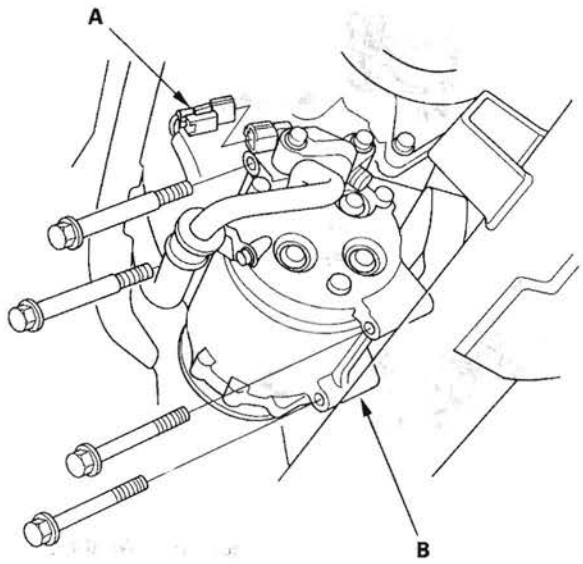

35. Lower the vehicle on the lift.

36. Remove the radiator (see page 10-18).

37. Remove the ATF cooler hose, then plug the line and hose.

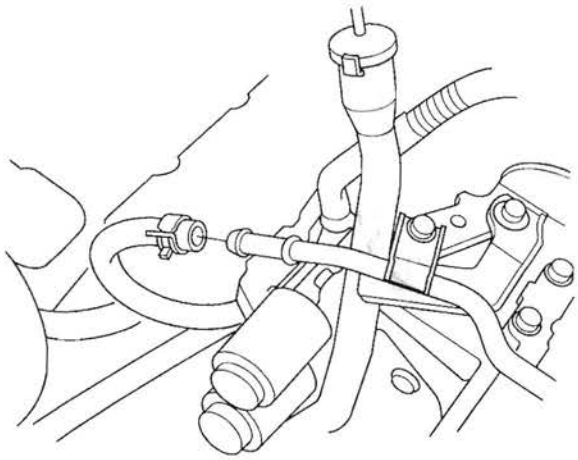

38. Remove the heater hoses.

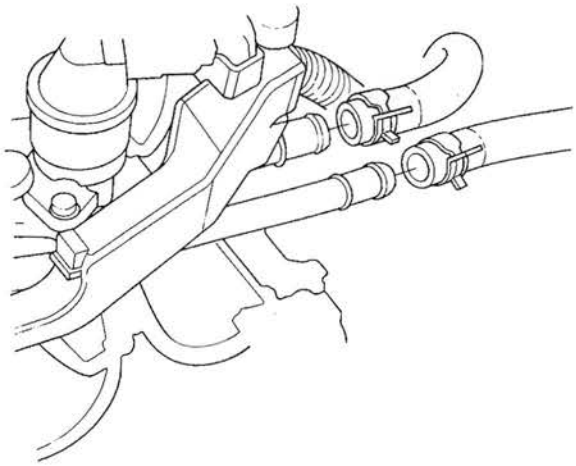

39. Install the front bulkhead (see step 16 on page 10-20).

40. Attach the special tool adapter (VSB02C000015) to the threaded hole (A) in the cylinder head.

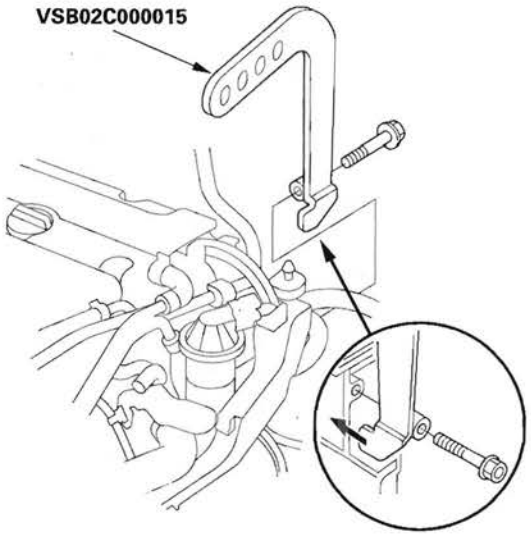

(cont'd)

Engine Removal (cont'd)

41. Remove both lids (A) from the cowl cover. Position the engine hanger adapters (VSB02C000032) over the damper flange nuts.

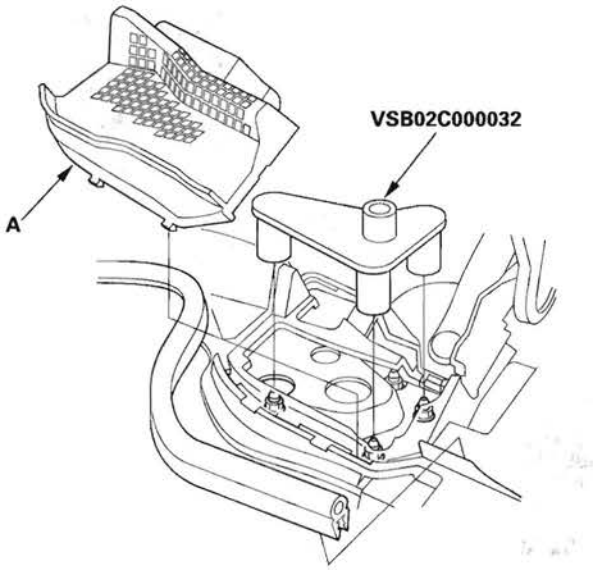

42. Install the engine support hanger (AAR-T-12566), then attach the hook to the slotted hole in the hanger adapter. Tighten the wing nut (A) by hand to lift and support the engine/transmission assembly.

    NOTE: Be careful when working around the windshield.

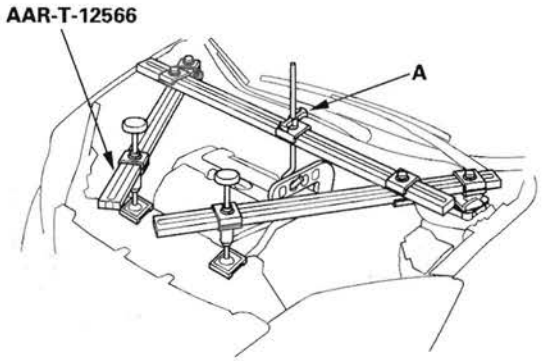

43. Raise the lift to full height.

44. Remove the lower torque rod.

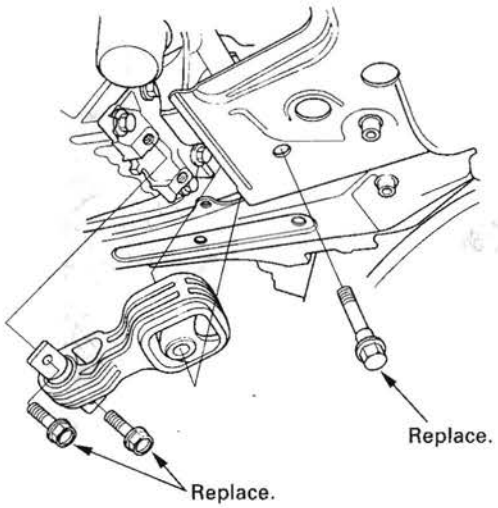

45. Make the appropriate reference lines (A) at both ends of the subframe that line up with the body (B).

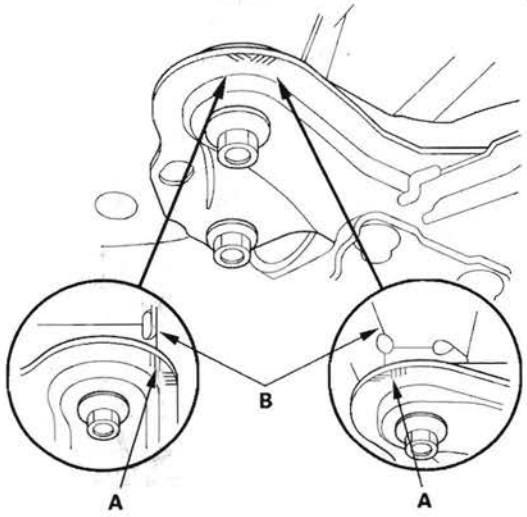

46. Remove the subframe mounting bolts (A) on both sides.

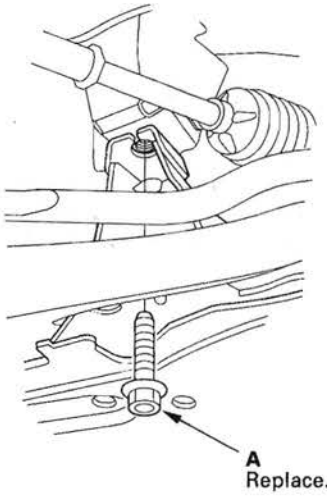

47. Attach the subframe adapter (A) to the subframe and hang the belt of the subframe adapter over the front of the subframe, then secure the belt with its stop.

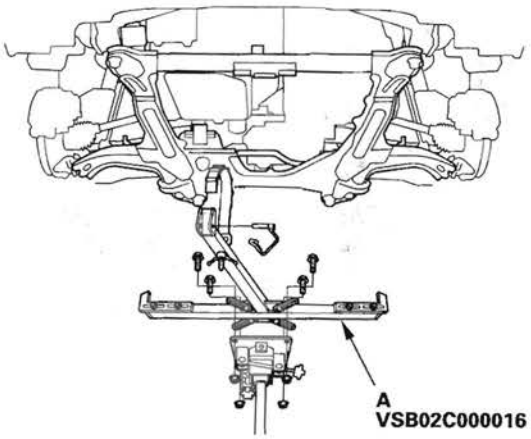

48. Raise the jack and line up the slots in the arms with the bolt holes on the corner of the jack base, then attach them with bolts securely.

49. Remove the subframe.

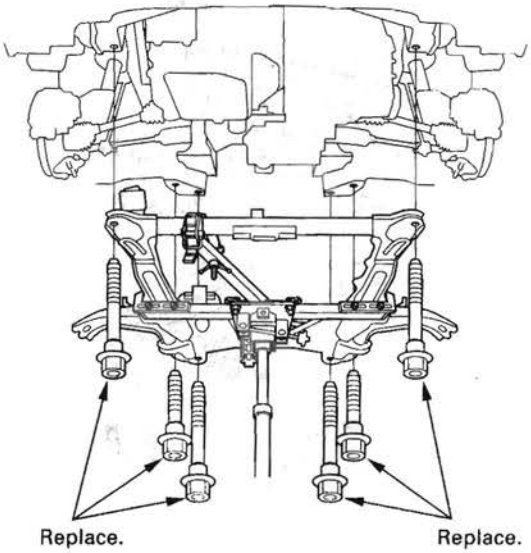

50. Lower the vehicle on the lift.

51. Remove the transmission mount.

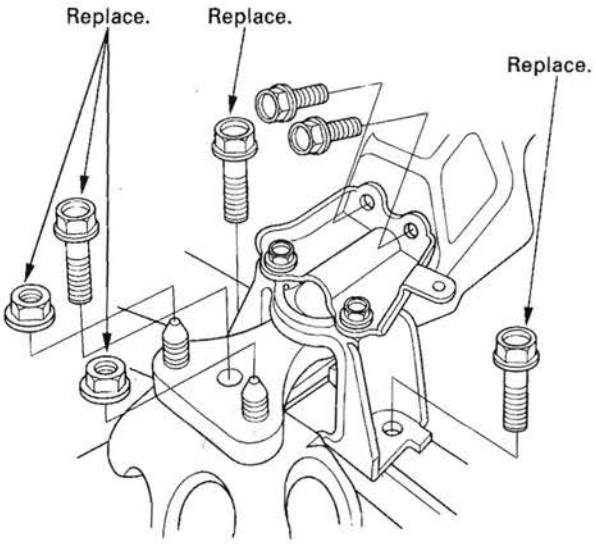

(cont'd)

Engine Removal (cont'd)

52. Remove the ground cable (A), then remove the transmission mount bracket (B).

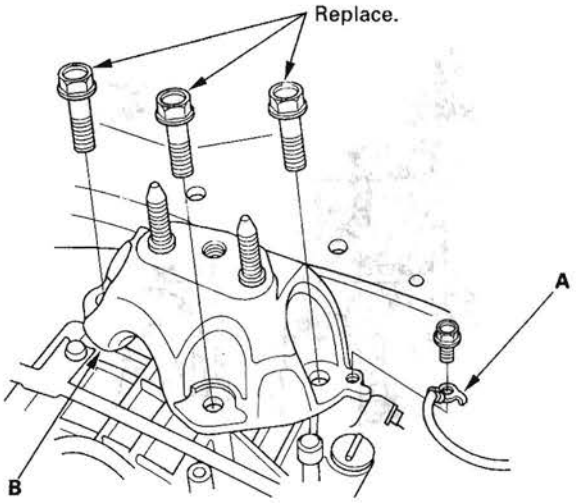

53. Install the transmission hanger bracket (P/N 21232-RCT-A00) (A) and washer (B) on the transmission.

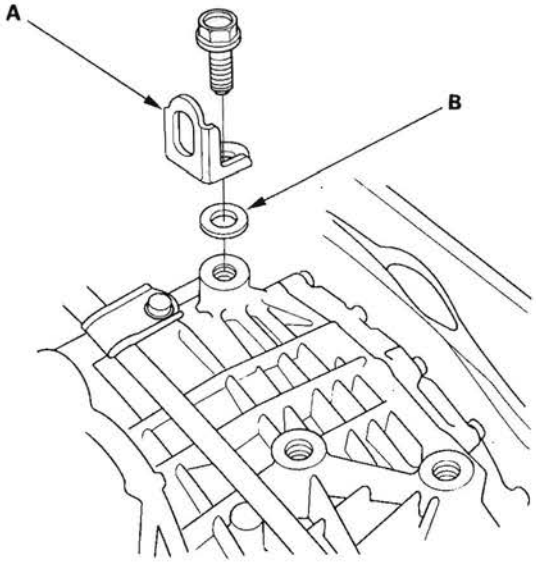

54. Install the universal eyelet.

07AAK-SNAA120

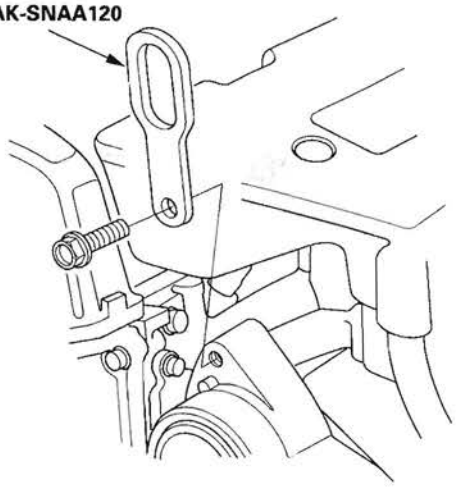

55. Attach a chain hoist (A) to the universal eyelet (B), and the transmission hook (C). Lift up on the engine /transmission assembly until it's securely supported by the chain hoist, and remove the engine support hanger.

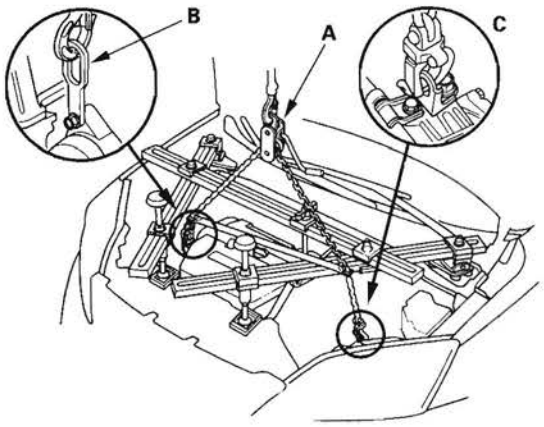

56. Remove the side engine mount bracket mounting bolt and nut.

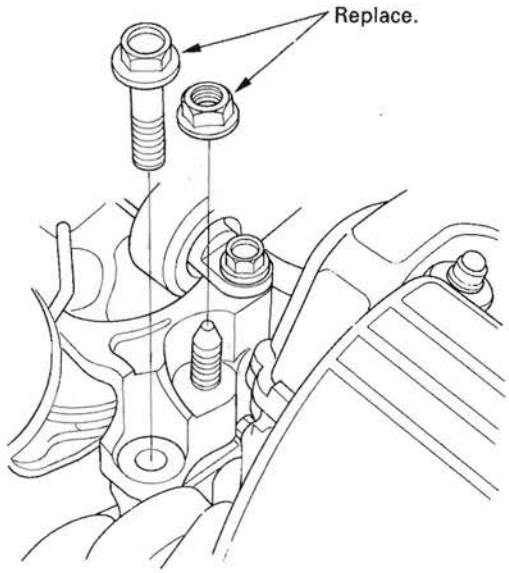

57. Check that the engine/transmission is completely free of vacuum hoses, fuel and coolant hoses, and electrical wiring.

58. Slowly lower the engine/transmission assembly about 150 mm (6 in.). Check once again that all hoses and electrical wiring are disconnected and free from the engine/transmission, then lower it all the way.

59. Disconnect the chain hoist from the engine/transmission assembly.

60. Raise the vehicle all the way on the hoist, and remove the engine/transmission assembly from under the vehicle.

Engine Installation

Special Tools Required
- Universal eyelet 07AAK-SNAA120
- Engine hanger adapter VSB02C000015 *
- Front subframe adapter VSB02C000016 *
- CR-V engine hanger adapter VSB02C000032 *
- Engine support hanger, A and Reds AAR-T-12566 *

* : Available through American Honda Tool and Equipment Program, 1-888-424-6857

1. Install the accessory brackets, and tighten their bolts to the specified torques.

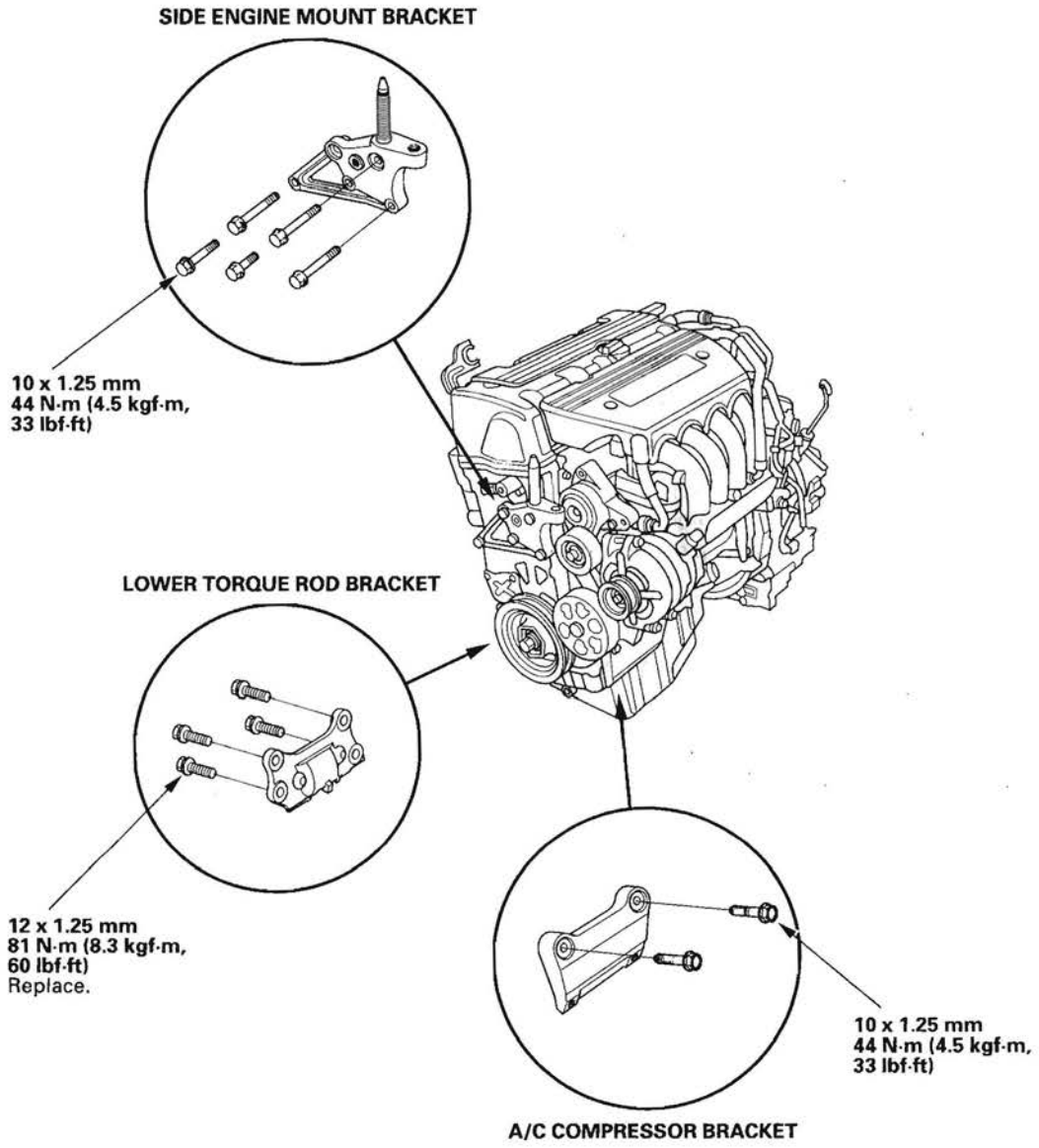

2. Raise the vehicle on the lift, and position the engine /transmission assembly under the vehicle. Lower the vehicle, and attach the special tool and chain hoist to the engine, then lift the engine into position in the vehicle.

   NOTE: Reinstall the mounting bolts and support nuts in the sequence given in the following steps. Failure to follow this sequence may cause excessive noise and vibration, and reduce engine mount life.

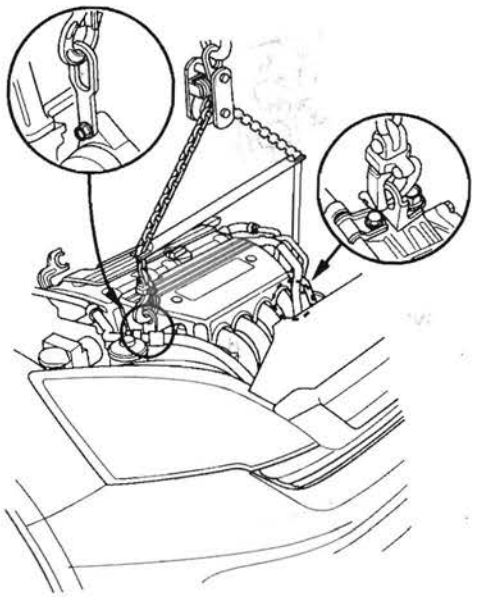

3. Attach the special tool adapter (VSB02C000015) to the threaded hole (A) in the cylinder head.

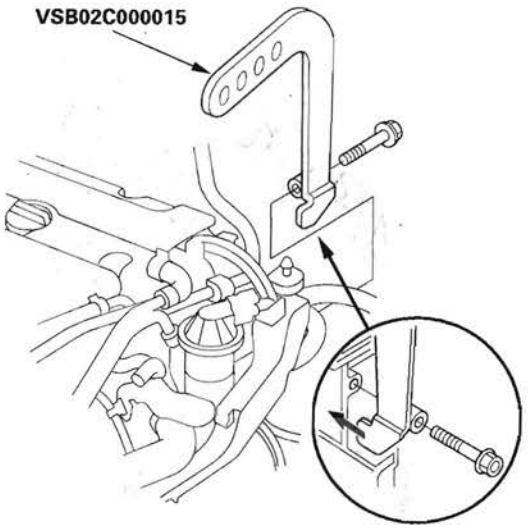

4. Remove both lids (A) from the cowl cover. Position the engine hanger adapters (VSB02C000032) over the damper flange nuts.

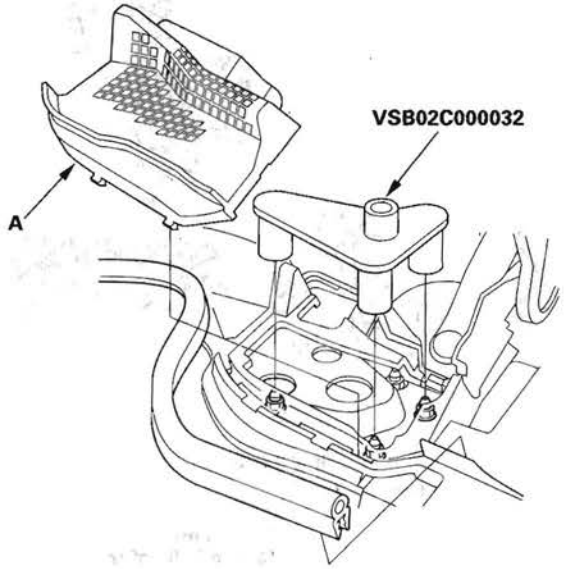

5. Install the engine support hanger (AAR-T-12566), then attach the hook to the slotted hole in the hanger adapter. Tighten the wing nut (A) by hand to lift and support the engine/transmission assembly.

   NOTE: Be careful when working around the windshield.

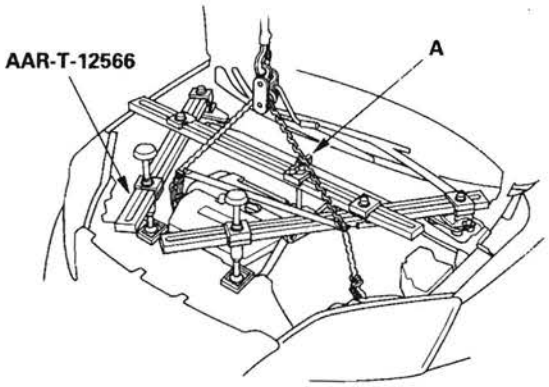

(cont'd)

Engine Installation (cont'd)

6. Loosen the upper torque rod mounting bolt (A).

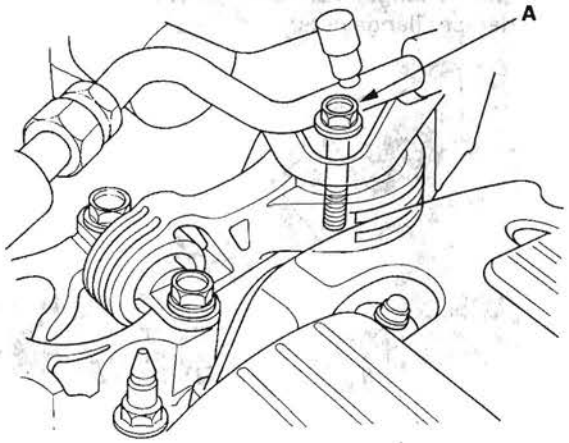

7. Tighten the new side engine mount bracket mounting bolt and nut.

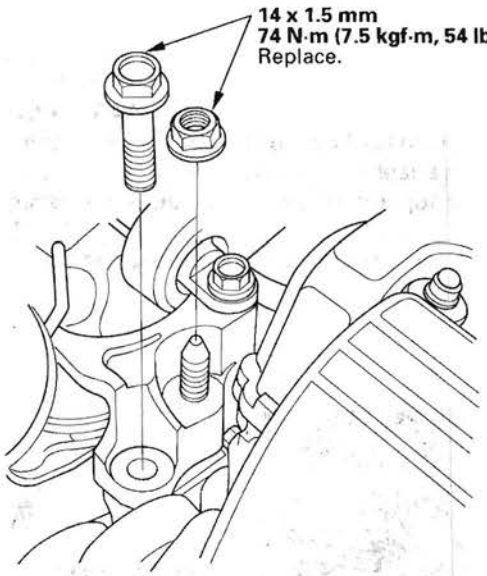

8. Remove the chain hoist.
9. Remove the universal eyelet.

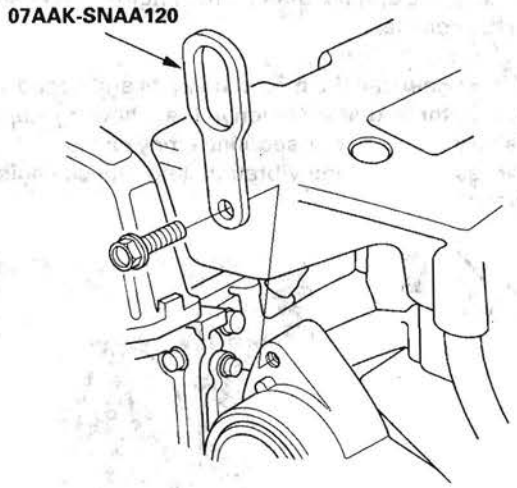

10. Remove the transmission hanger bracket (P/N 21232-RCT-A00) (A) and washer (B).

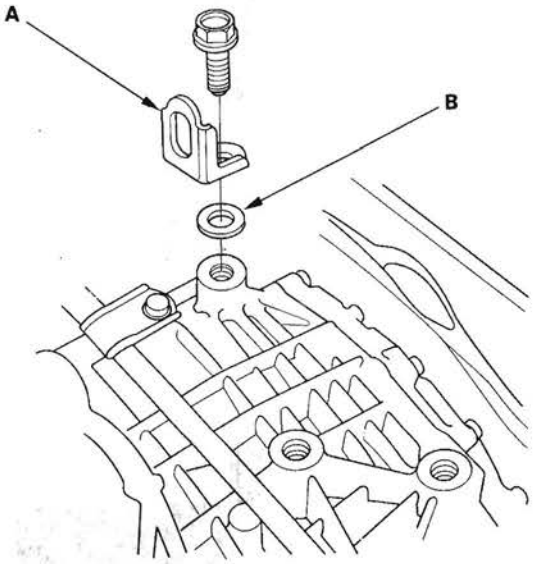

11. Install the transmission mount bracket (A), then install the ground cable (B).

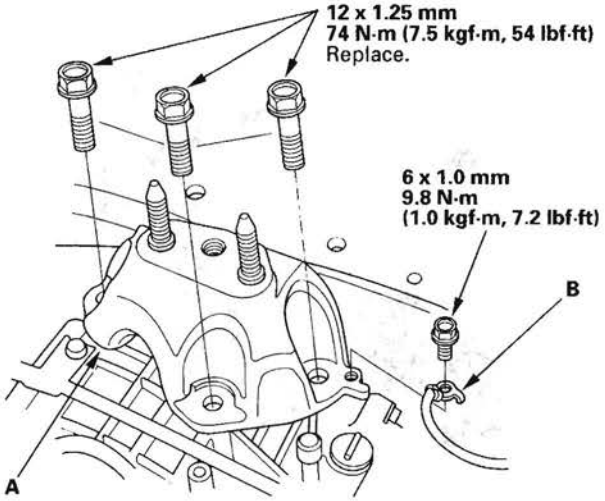

12. Install the transmission mount, then tighten the transmission mount stiffener mounting bolts (A) and the new transmission mount mounting bolts (B).

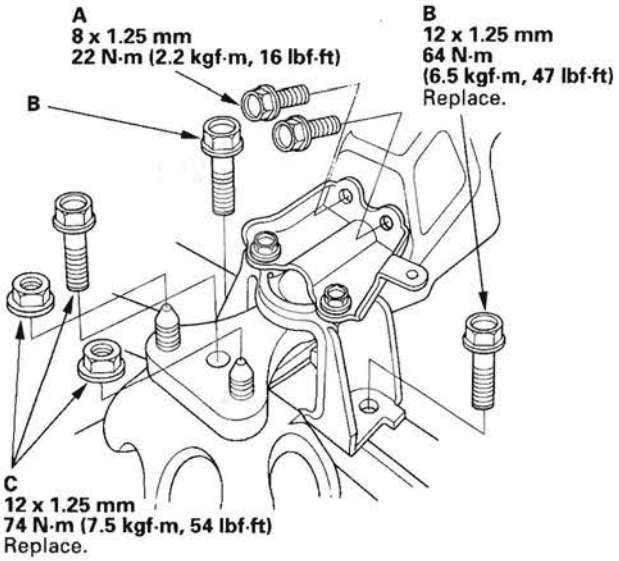

13. Tighten the new bolt and nuts (C).

14. Raise the vehicle on the lift to full height.

15. Using the subframe adapter (A) and a jack, raise the subframe up to body.

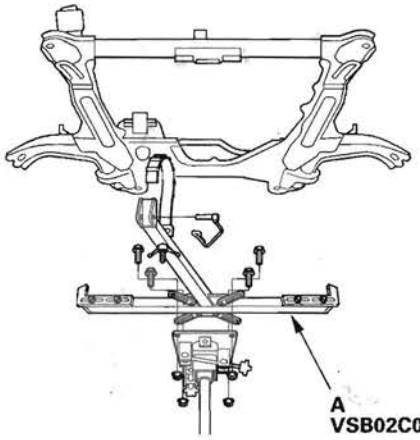

16. Loosely install the new 14 x 1.5 mm bolts.

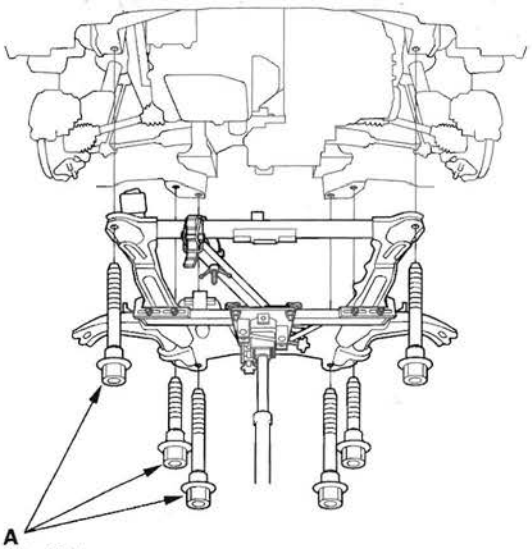

(cont'd)

Engine Installation (cont'd)

17. Align all reference marks (A) on the front subframe (B) with the body, then tighten the bolts on the front subframe to the specified torque.

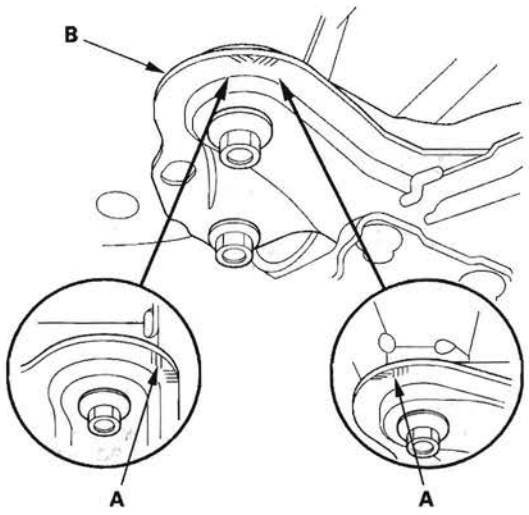

18. Tighten the new subframe mounting bolts (A) on both side.

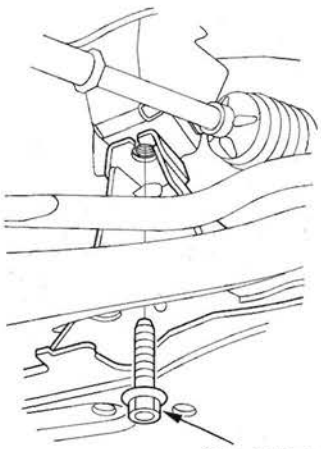

12 x 1.25 mm
64 N·m (6.5 kgf·m, 47 lbf·ft)
Replace.

19. Install the lower torque rod, then tighten the new lower torque rod mounting bolts in the numbered sequence shown.

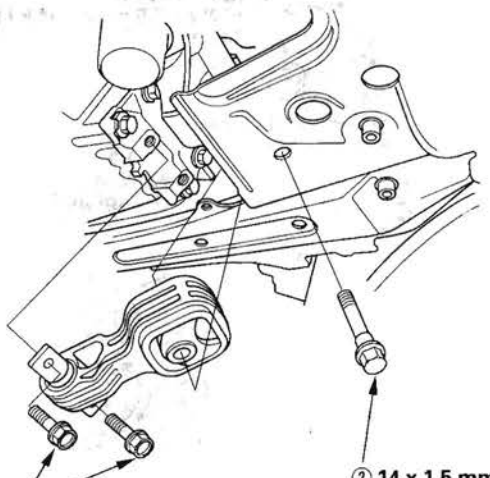

① **12 x 1.25 mm**
88 N·m (9.0 kgf·m, 65 lbf·ft)
Replace.

② **14 x 1.5 mm**
93 N·m
(9.5 kgf·m, 69 lbf·ft)
Replace.

20. Lower the vehicle on the lift.

21. Remove the engine support hanger from the vehicle. Remove the adapter from the cylinder head.

22. Tighten the upper torque rod mounting bolt.

12 x 1.25 mm
54 N·m (5.5 kgf·m, 40 lbf·ft)

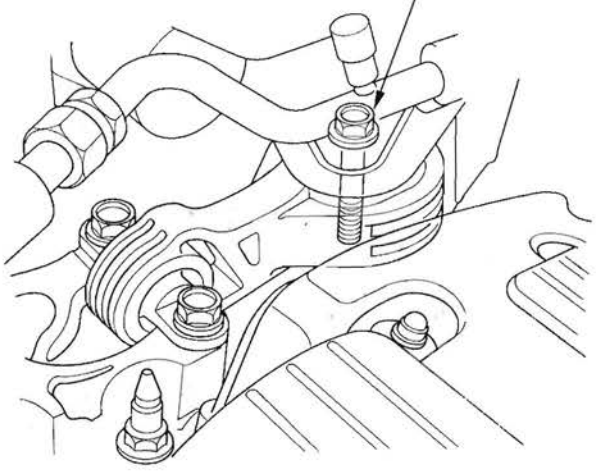

23. Raise the vehicle on the lift to full height.

24. Install the A/C compressor (A), then connect the A/C compressor clutch connector (B).

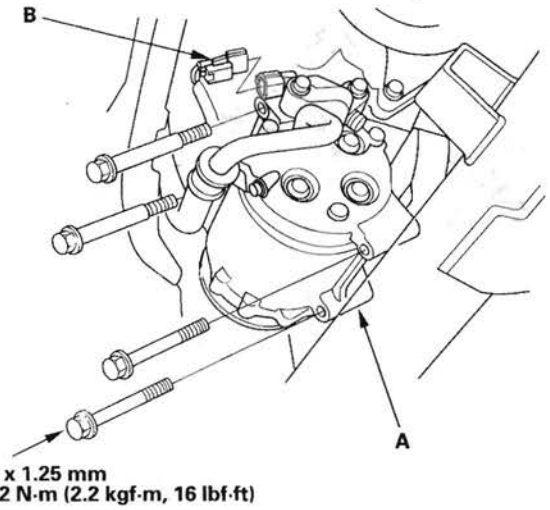

25. Install the bolts securing the left tsteering gearbox mounting bracket.

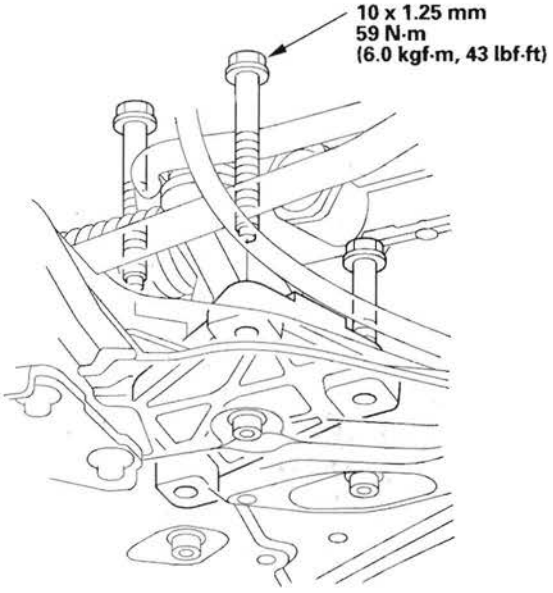

26. Install the bolts securing the right steering gearbox mounting bracket.

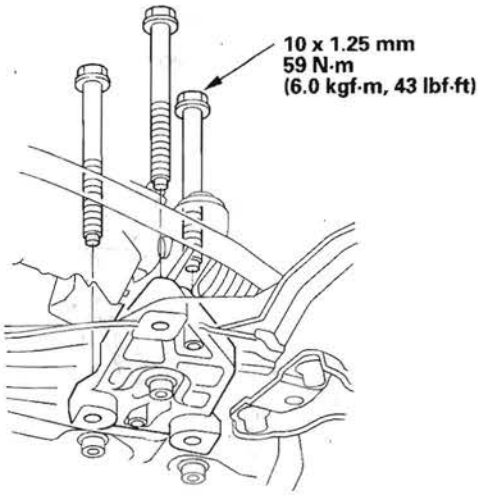

27. Install the power steering (P/S) fluid line bracket (A), and secure the hose with the hose clamps (B).

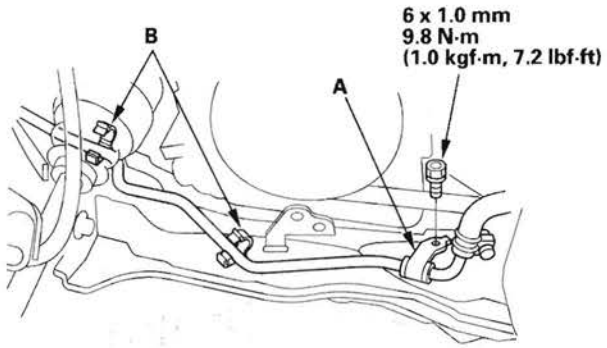

28. Install the propeller shaft (see page 16-41).

29. Install a new set ring on the end of each driveshaft, then install the driveshafts. Make sure each ring "clicks" into place in the differential and intermediate shaft.

30. Connect the lower arms to the knuckles (see step 8 on page 18-20).

31. Install the shift cable (see step 34 on page 14-262).

(cont'd)

Engine Installation (cont'd)

32. Install the three way catalytic converter (TWC) (A). Use new gaskets (B) and new self-locking nuts (C).

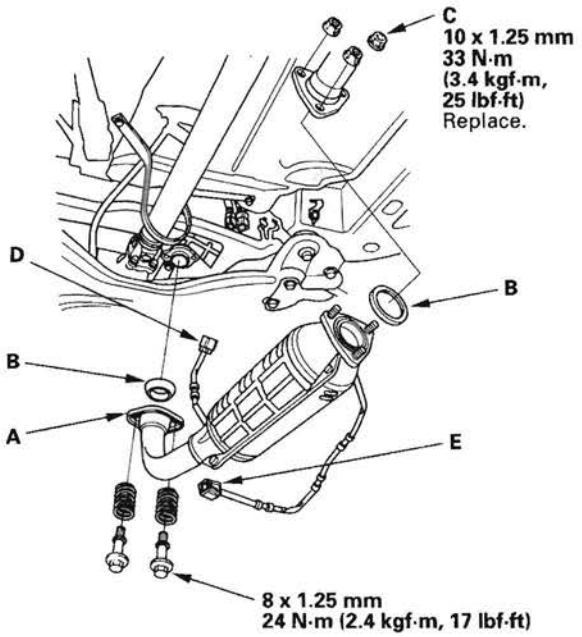

33. Connect the air fuel ratio (A/F) sensor connector (D) and secondary heated oxygen sensor (secondary HO2S) connector (E).

34. Install the splash shield.

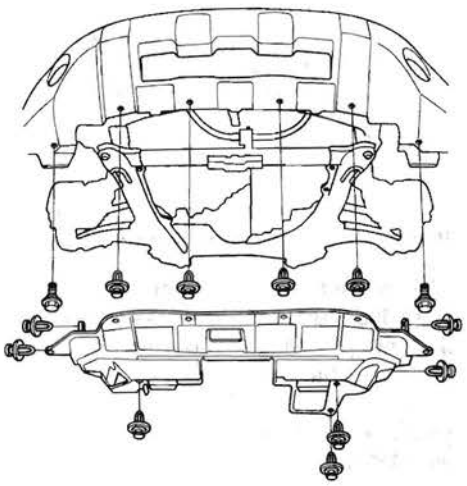

35. Lower the vehicle on the lift.

36. Install the heater hoses.

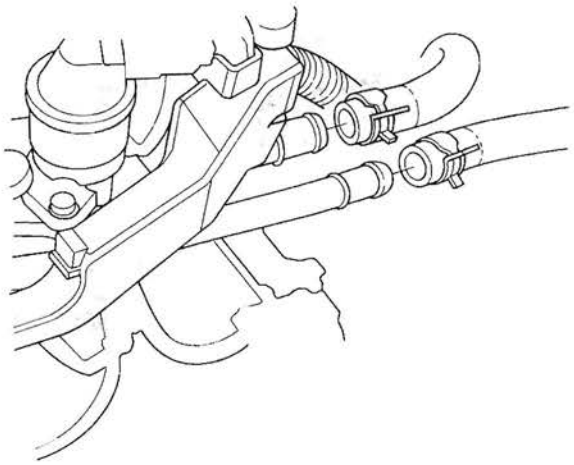

37. Install the radiator (see page 10-18).

38. Install the automatic transmission fluid (ATF) cooler hose (A), and secure the hoses with the clip (B) (see page 14-270).

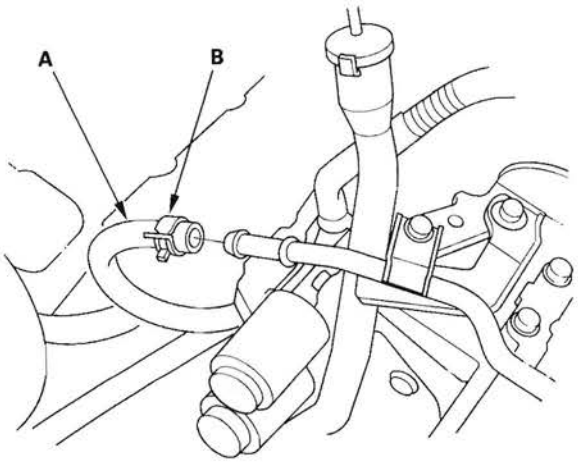

39. Install the P/S pump (A), then install the P/S hose to the clamp (B).

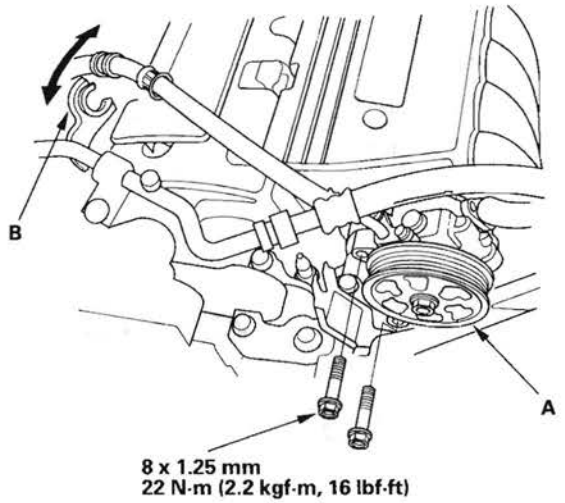

40. Install the drive belt (see page 4-29).

41. Connect the fuel feed hose (see page 11-326), then install the quick-connect fitting cover (A).

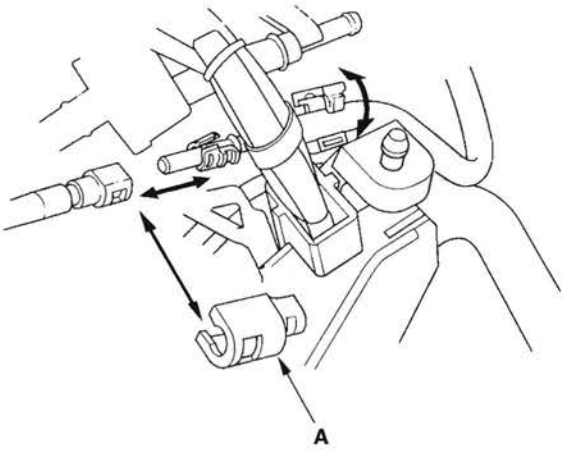

42. Install the evaporative emission (EVAP) canister hose (A) and brake booster vacuum hose (B).

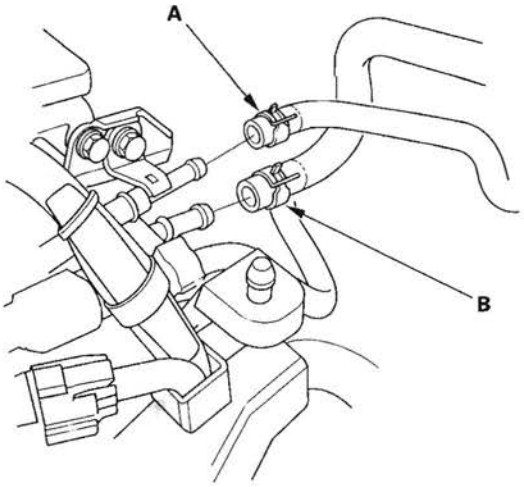

43. Install the powertrain control module (PCM) bracket (A), then install the harness clamp (B).

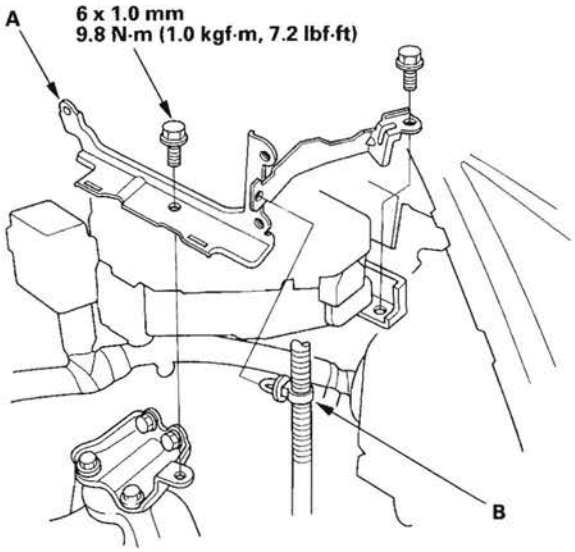

(cont'd)

Engine Installation (cont'd)

44. Connect the PCM connectors (A) and engine wire harness connector (B).

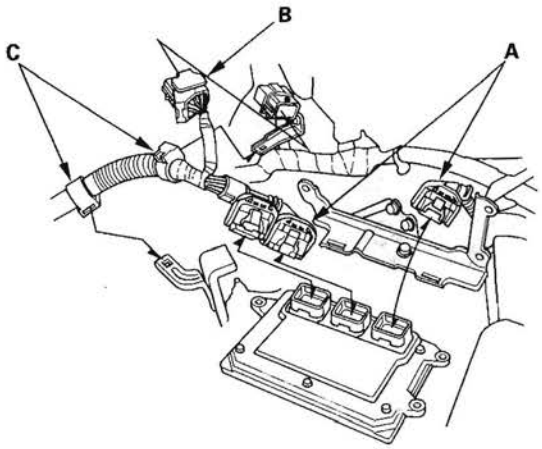

45. Install the harness clamps (C).

46. Install the PCM (A), then install the PCM cover (B).

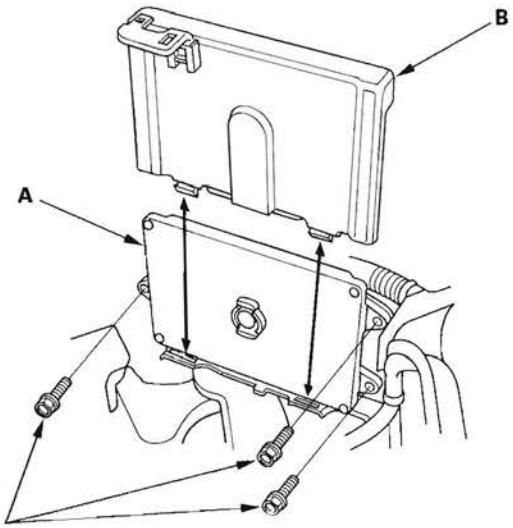

47. Install the battery cables (A) to the under-hood fuse/relay box.

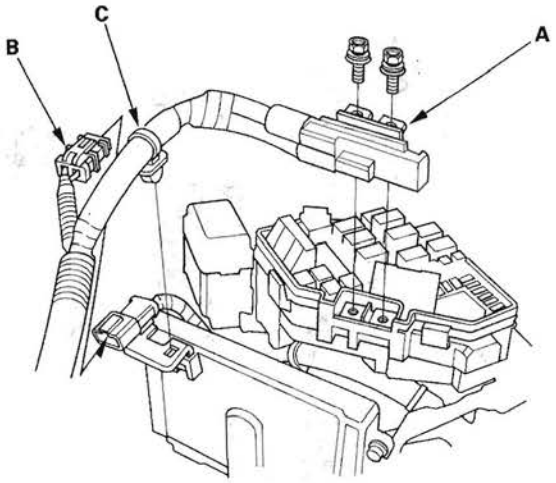

48. Connect the harness connector (B), and install the harness clamp (C).

49. Install the ground cable (A) and harness clamp (B).

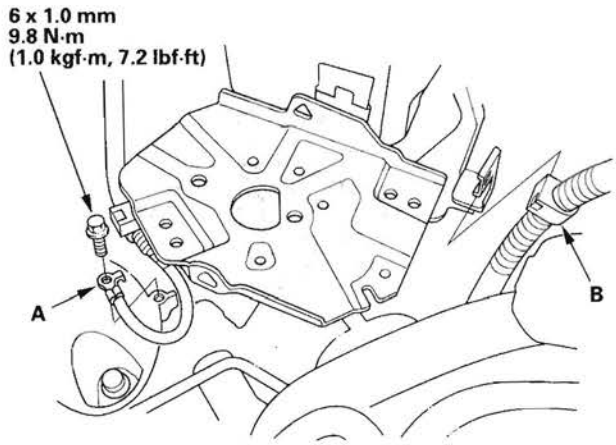

50. Install the air cleaner housing assembly (see page 11-340).

51. Install the front wheels.

52. Install the battery. Clean the battery posts and cable terminals with a battery post cleaner, then assemble them, and apply grease to prevent corrosion.

53. Move the shift lever to each gear, and verify that the A/T gear position indicator follows the transmission range switch.

54. Inspect for fuel leaks: Turn the ignition switch ON (II) (do not operate the starter) so the fuel pump runs for about 2 seconds and pressurizes the fuel line. Repeat this operation two or three times, then check for fuel leakage at any point in the fuel line.

55. Refill the engine with engine oil (see step 4 on page 8-10).

56. Refill the transmission with ATF (see step 3 on page 14-239).

57. Refill the radiator with engine coolant, and bleed air from the cooling system with the heater valve open (see step 6 on page 10-6).

58. Do the PCM reset procedure (see page 11-4).

59. Do the crankshaft position (CKP) pattern clear/CKP pattern learn procedure (see page 11-4).

60. Inspect the idle speed (see page 11-303).

61. Inspect the ignition timing (see page 4-18).

62. Check the wheel alignment (see page 18-5).

63. Enter the anti-theft code for the audio system and the navigation system (if equipped), then enter the MX radio presets.

64. Set the clock.

Side Engine Mount Replacement

1. Support the engine with a jack and wood block under the oil pan.
2. Remove the power steering (P/S) fluid reservoir from the holder.
3. Remove the upper torque rod.

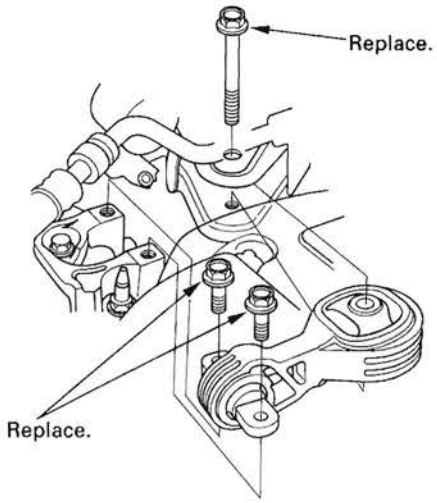

4. Remove the ground cable (A), then remove the side engine mount bracket (B).

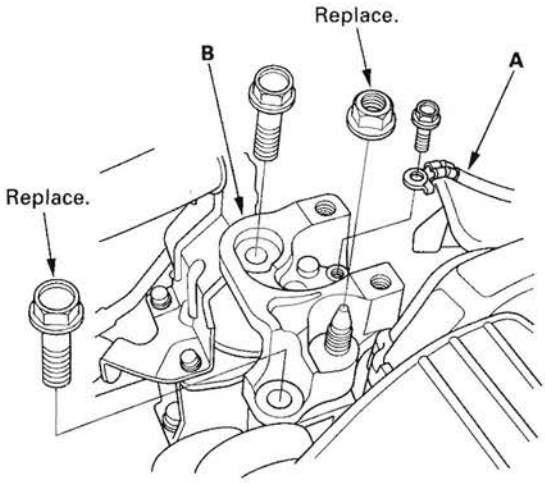

5. Remove the side engine mount stiffener (A), then remove the side engine mount (B).

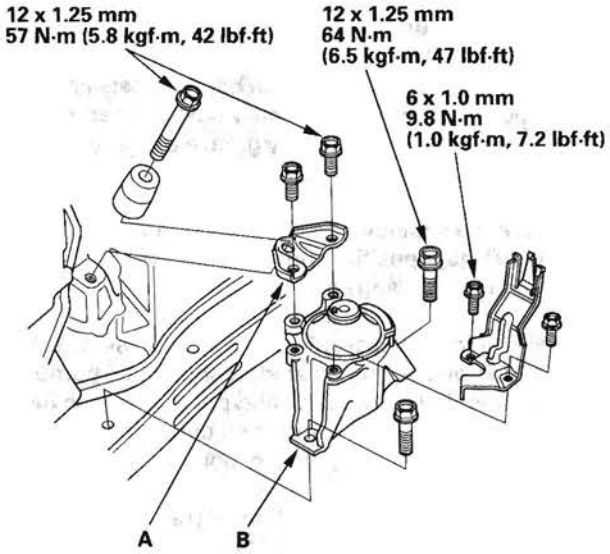

6. Install the side engine mount, then install the side engine mount stiffener.
7. Install the side engine mount bracket (A), then loosely tighten the new bolt and nut (B), and loosely tighten the bolt (C).

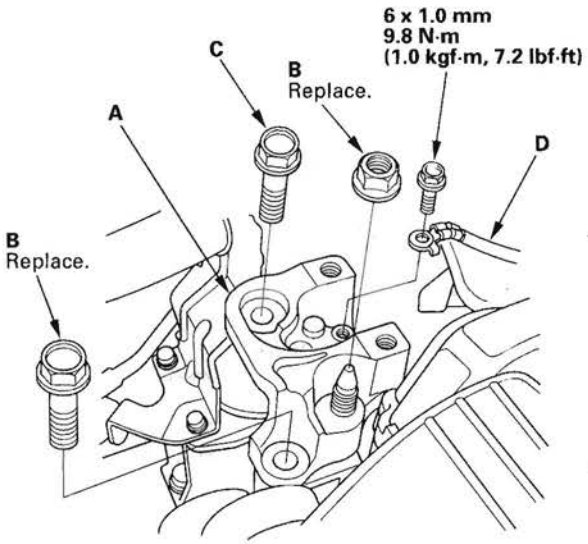

8. Install the ground cable (D).

9. Remove the air cleaner housing assembly (see page 11-340).

10. Loosen the transmission mounting bolt and nuts (A).

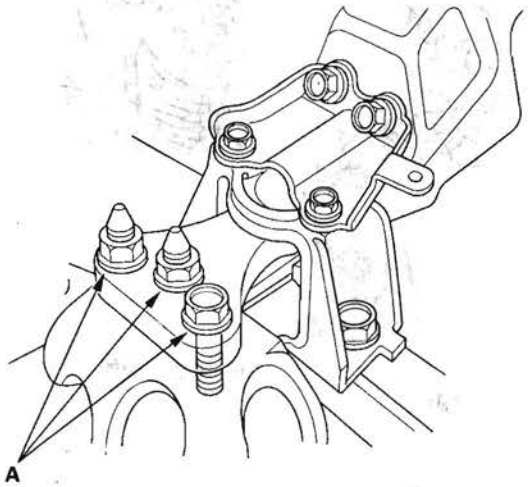

11. Raise the lift to full height.

12. Loosen the lower torque rod mounting bolt (A).

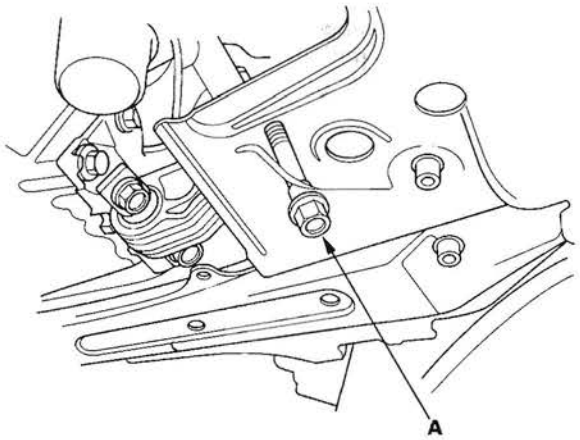

13. Lower the vehicle on the lift.

14. Tighten the side engine mount mounting bolts and nut.

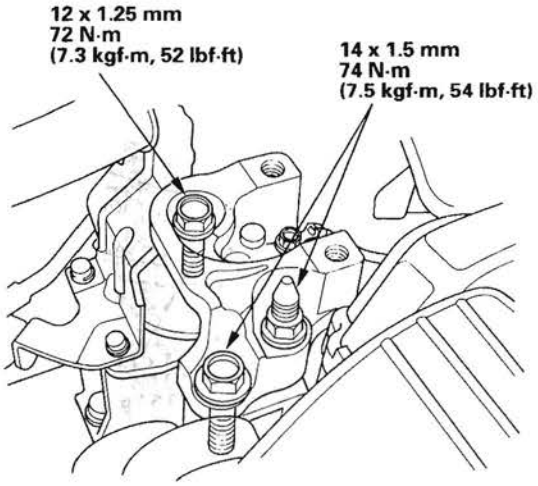

15. Tighten the transmission mounting bolt and nuts.

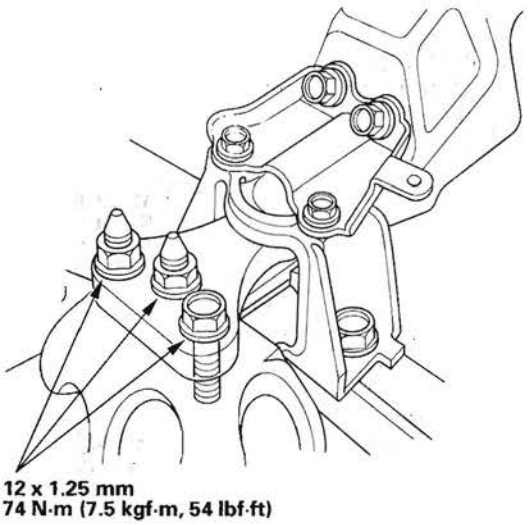

16. Raise the lift to full height.

(cont'd)

Side Engine Mount Replacement (cont'd)

17. Tighten the lower torque rod mounting bolt.

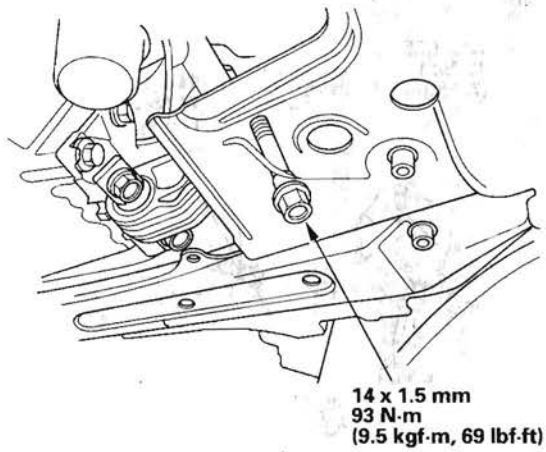

18. Lower the vehicle on the lift.

19. Install the air cleaner housing assembly (see page 11-340).

20. Install the upper torque rod, then tighten the new upper torque rod mounting bolts in the numbered sequence shown.

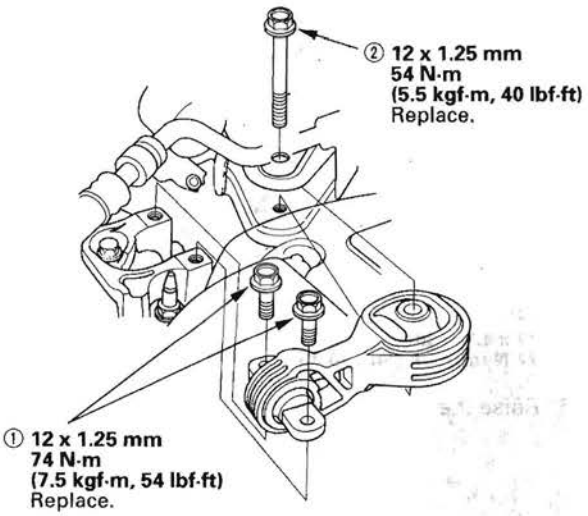

Transmission Mount Replacement

1. Loosen the upper torque rod mounting bolt (A).

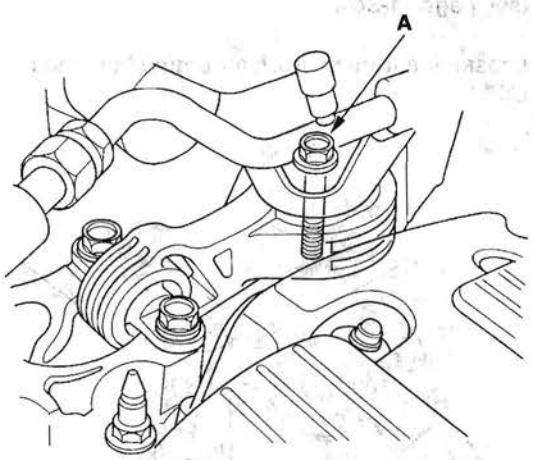

2. Remove the air cleaner housing assembly (see page 11-340).

3. Remove the powertrain control module (PCM) cover, then remove the three bolts securing the PCM.

4. Remove the PCM bracket.

5. Support the transmission with a jack and wood block under the transmission.

6. Remove the transmission mount stiffener (A) and transmission mount (B).

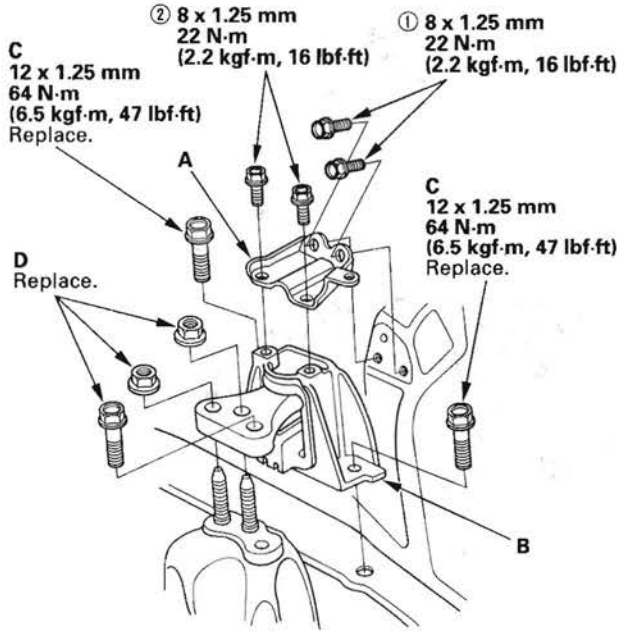

7. Install the transmission mount with the new mounting bolts (C), then install the transmission mount stiffener, and tighten the mounting bolts in the numbered sequence shown.

8. Loosely tighten the new bolt and nuts (D).

9. Raise the lift to full height.

10. Loosen the lower torque rod mounting bolt (A).

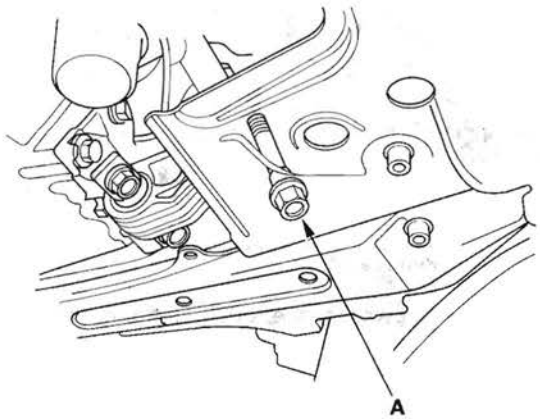

11. Lower the vehicle on the lift.

12. Tighten the transmission mounting bolt and nuts.

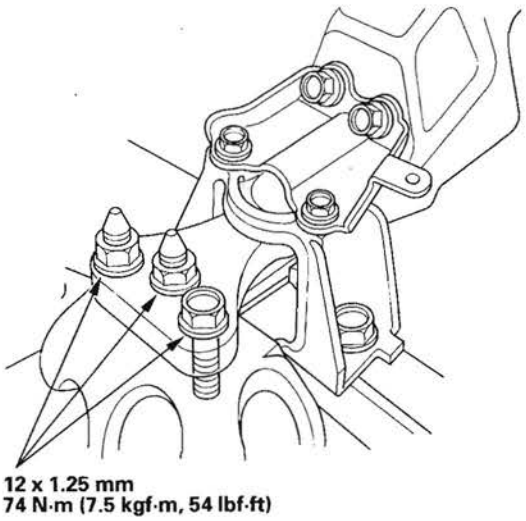

13. Raise the lift to full height.

14. Tighten the lower torque rod mounting bolt.

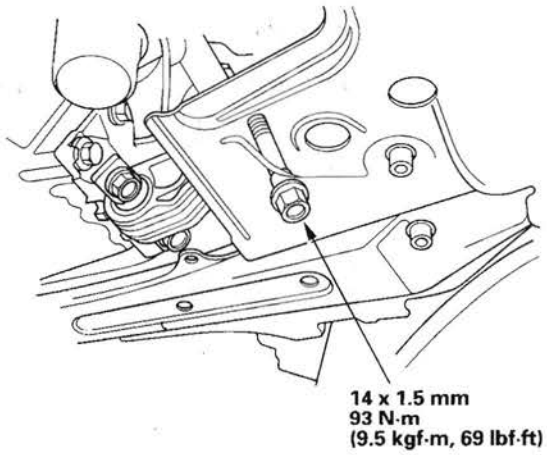

(cont'd)

Transmission Mount Replacement (cont'd)

15. Lower the vehicle on the lift.
16. Tighten the upper torque rod mounting bolt.

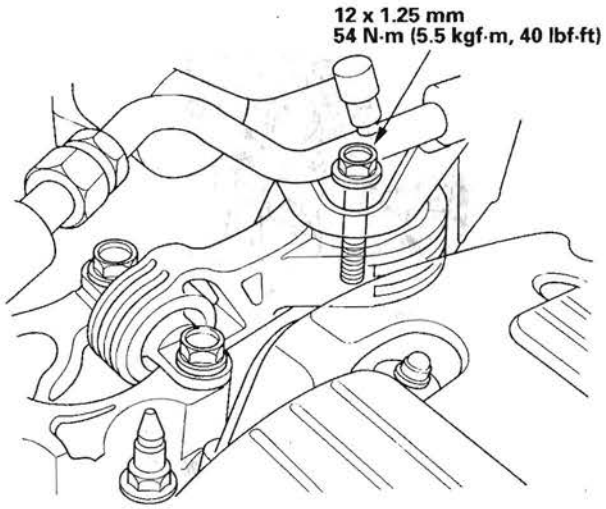

17. Install the PCM bracket.
18. Install the PCM, then install the PCM cover.
19. Install the air cleaner housing assembly (see page 11-340).

Lower Torque Rod Replacement

1. Loosen the upper torque rod mounting bolt (A).

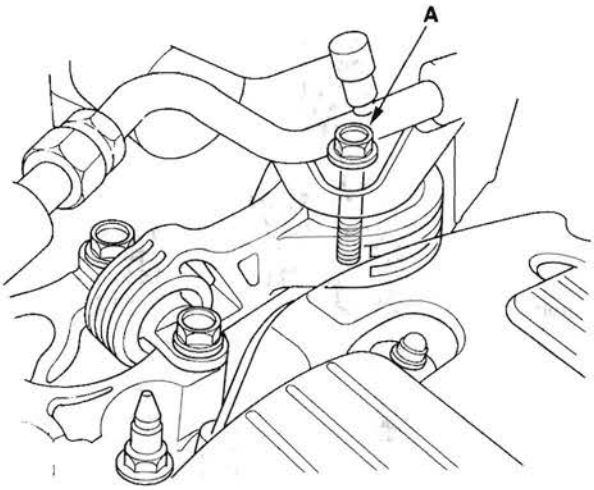

2. Raise the lift to full height.
3. Remove the lower torque rod.

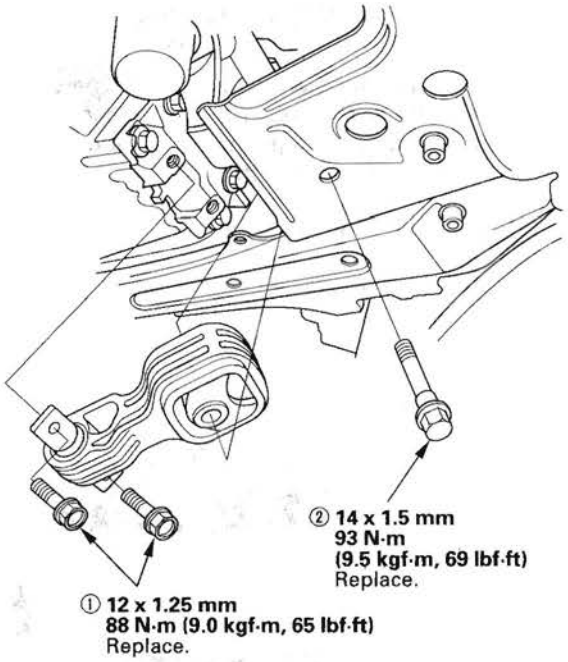

4. Install the lower torque rod, then tighten the new lower torque rod mounting bolts in the numbered sequence shown.

5. Lower the vehicle on the lift.

6. Tighten the upper torque rod mounting bolt.

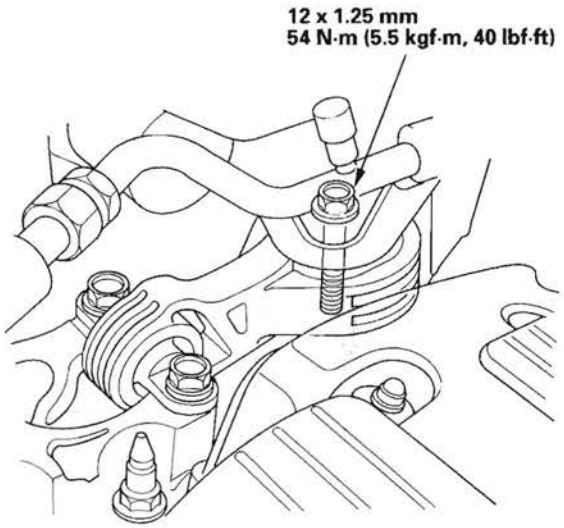

Upper Torque Rod Replacement

1. Remove the upper torque rod (A).

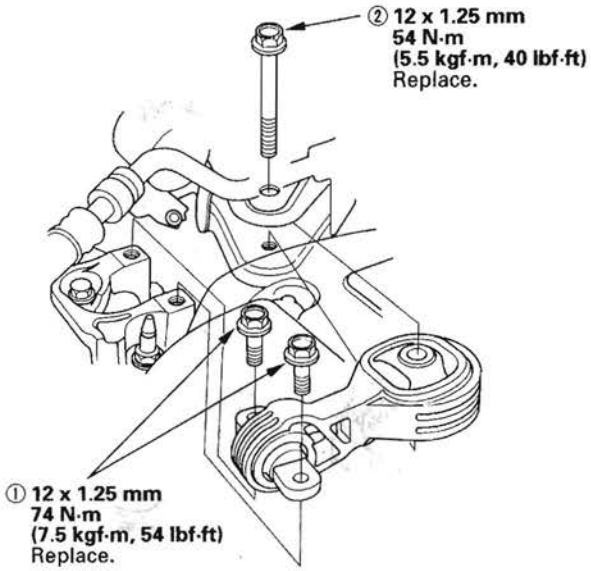

2. Install the upper torque rod, then tighten the new bolts in the numbered sequence shown.

Side Engine Mount Bracket Replacement

1. Support the engine with a jack and wood block under the oil pan.
2. Remove the upper torque rod.

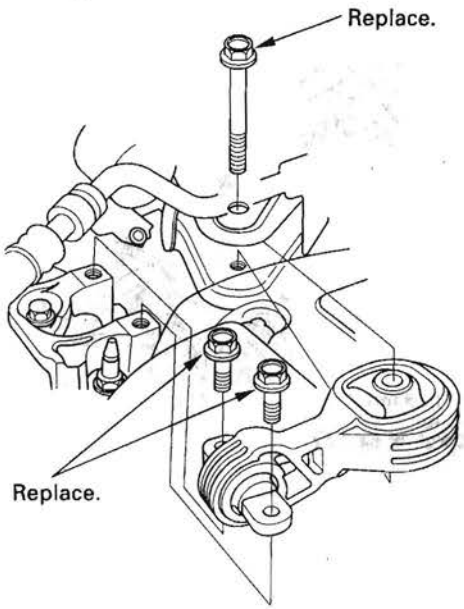

3. Remove the ground cable (A), then remove the side engine mount bracket (B).

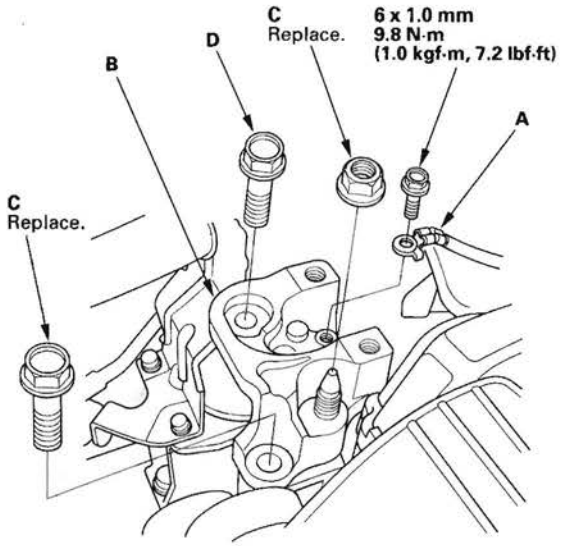

4. Install the side engine mount bracket, then loosely tighten the new bolt and nut (C), and loosely tighten the bolt (D).
5. *Install the ground cable.*
6. Remove the air cleaner housing assembly (see page 11-340).
7. Loosen the transmission mounting bolt and nuts (A).

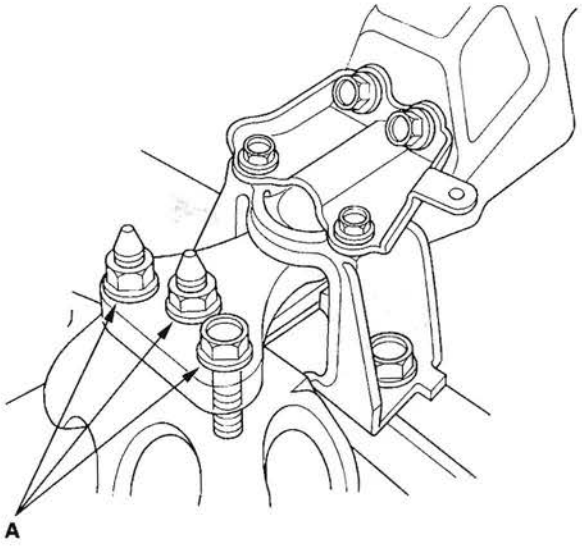

8. Raise the lift to full height.
9. Loosen the lower torque rod mounting bolt (A).

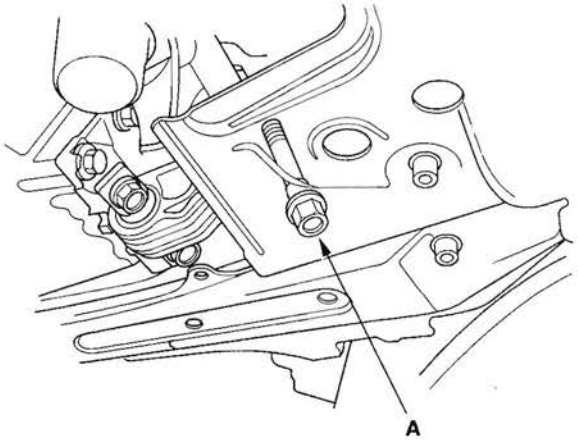

10. Lower the vehicle on the lift.

11. Tighten the side engine mount mounting bolts and nut.

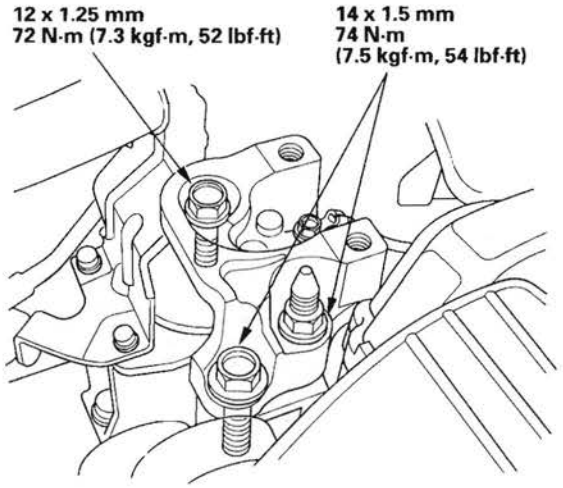

12. Tighten the transmission mounting bolt and nuts.

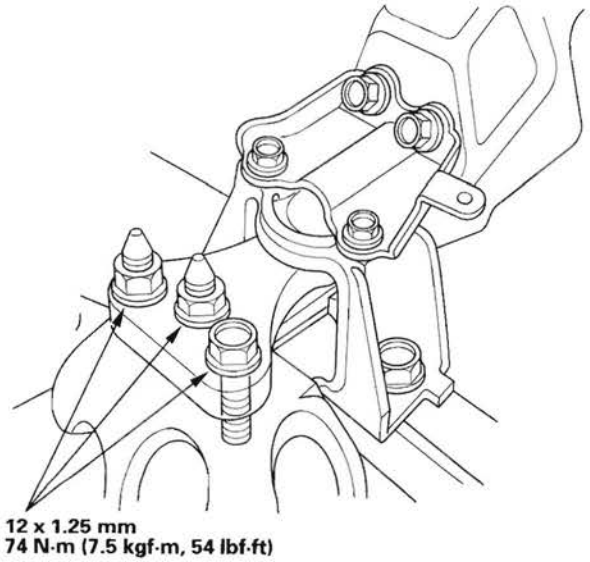

13. Raise the lift to full height.

14. Tighten the lower torque rod mounting bolt.

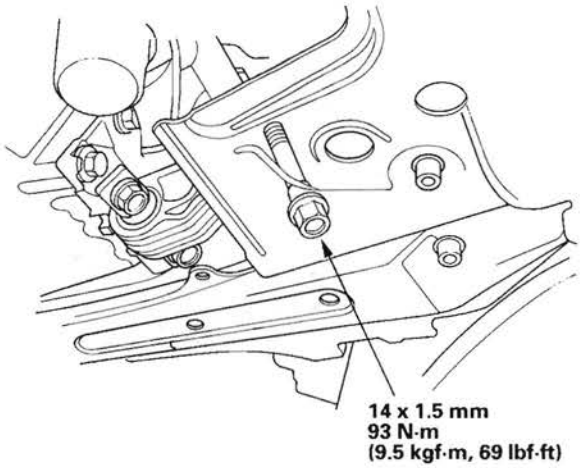

15. Lower the vehicle on the lift.

16. Install the air cleaner housing assembly (see page 11-340).

17. Install the upper torque rod, then tighten the new upper torque rod mounting bolts in the numbered sequence shown.

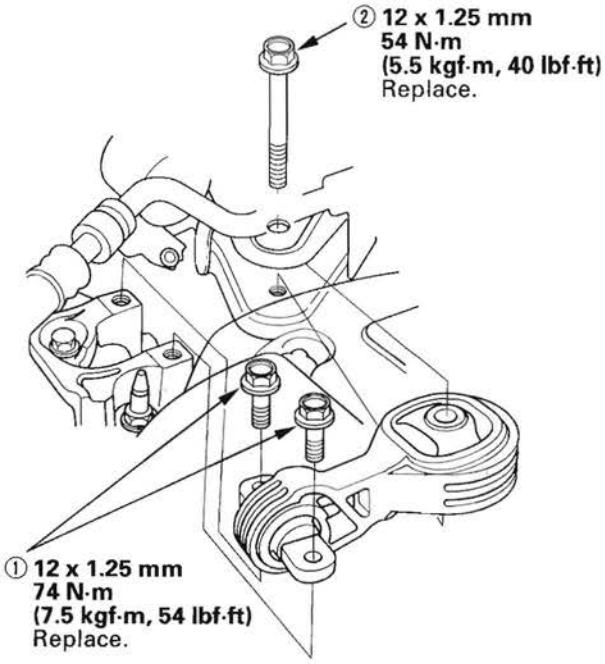

Engine Mechanical

Cylinder Head

Special Tools 6-2
Component Location Index 6-3
Engine Compression Inspection 6-6
VTEC Rocker Arm Test 6-7
VTC Actuator Inspection 6-8
Valve Clearance Adjustment 6-9
Crankshaft Pulley Removal and Installation 6-12
Cam Chain Removal 6-13
Cam Chain Installation 6-16
Auto-tensioner Removal and Installation 6-22
Chain Case Oil Seal Installation 6-24
Cam Chain Inspection 6-25
CKP Pulse Plate Replacement 6-27
Cylinder Head Cover Removal 6-29
Cylinder Head Cover Installation 6-30
Cylinder Head Removal 6-31
CMP Pulse Plate A Replacement 6-34
CMP Pulse Plate B Replacement 6-34
VTC Actuator, Exhaust Camshaft Sprocket Replacement 6-35
Cylinder Head Inspection for Warpage 6-36
Rocker Arm Assembly Removal 6-37
Rocker Arm and Shaft Disassembly/Reassembly 6-38
Rocker Arm and Shaft Inspection 6-39
Camshaft Inspection 6-40
Valve, Spring, and Valve Seal Removal 6-42
Valve Inspection 6-43
Valve Stem-to-Guide Clearance Inspection 6-43
Valve Guide Replacement 6-44
Valve Seat Reconditioning 6-46
Valve, Spring, and Valve Seal Installation 6-48
Rocker Arm Assembly Installation 6-49
Cylinder Head Installation 6-50
Sealing Bolt Installation 6-53

Special Tools

Ref. No.	Tool Number	Description	Qty
①	07AAJ-PNAA101	Air Pressure Regulator	1
②	07HAH-PJ7A100	Valve Guide Reamer, 5.5 mm	1
③	07JAA-001020A	Socket, 19 mm	1
④	07JAB-001020A	Holder Handle	1
⑤	07MAA-PR70110	Adjuster	1
⑥	07MAA-PR70120	Locknut Wrench	1
⑦	07PAD-0010000	Stem Seal Driver	1
⑧	07ZAJ-PNAA101	VTEC Air Adapter	2
⑨	07ZAJ-PNAA200	VTEC Air Stopper	1
⑩	07ZAJ-PNAA300	Air Joint Adapter	1
⑪	070AB-RJA0100	Crankshaft Pulley Holder	1
⑫	07742-0010100	Valve Guide Driver, 5.5 mm	1
⑬	07746-0010400	Attachment, 52 x 55 mm	1
⑭	07749-0010000	Driver	1
⑮	07757-PJ1010A	Valve Spring Compressor Attachment	1

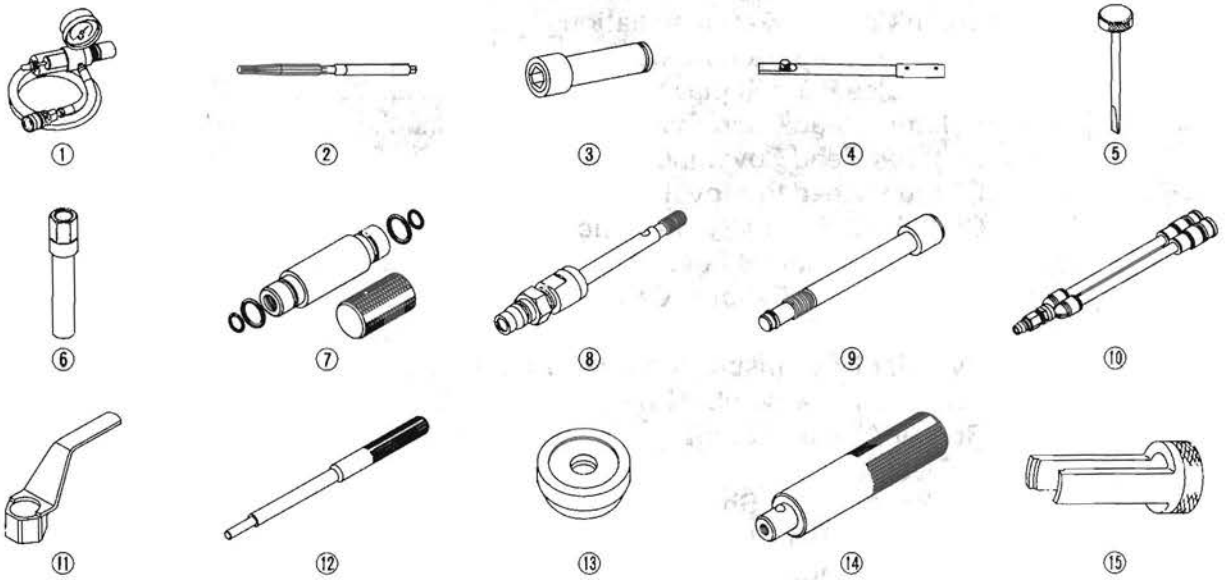

Component Location Index

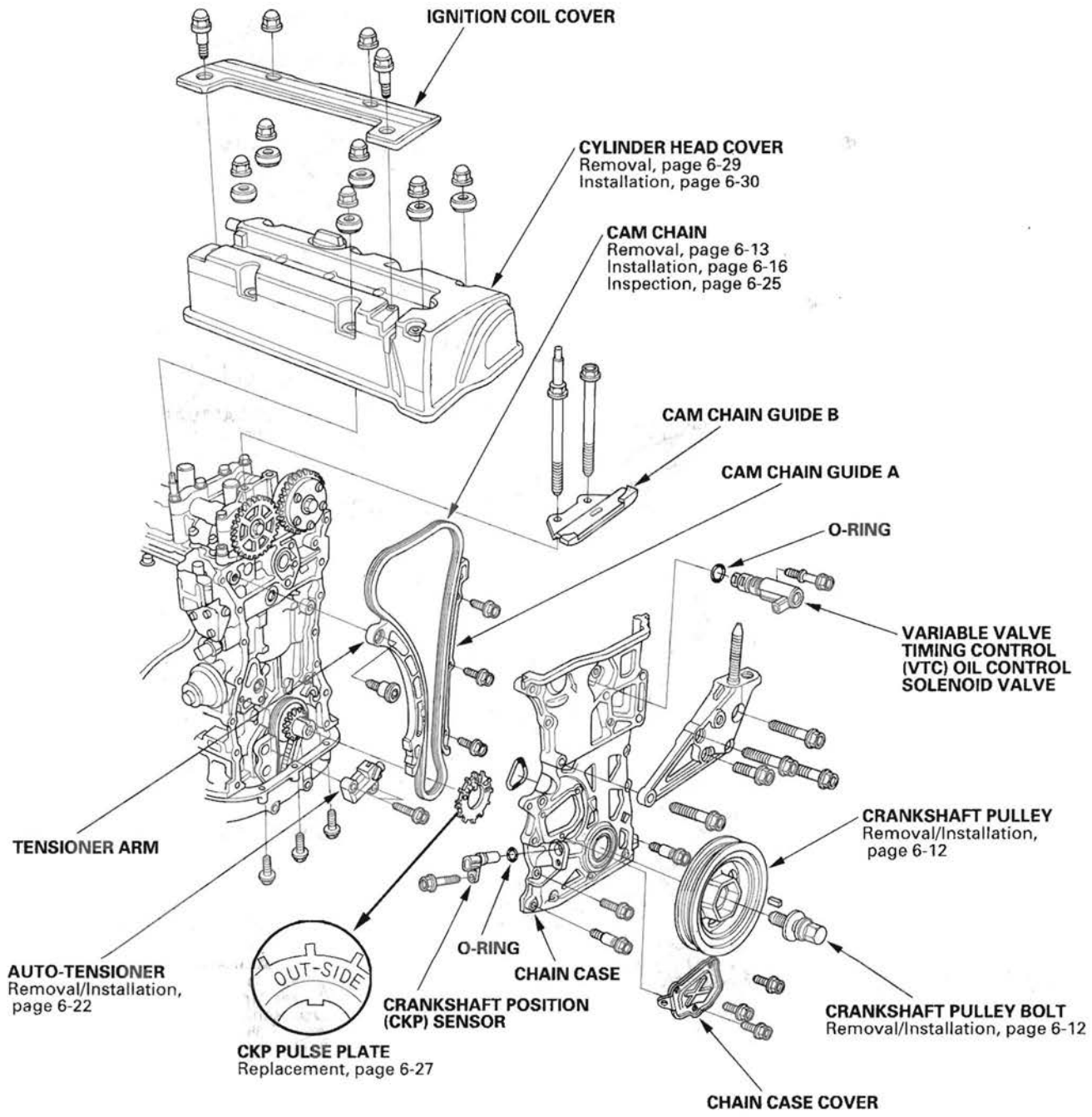

(cont'd)

Component Location Index (cont'd)

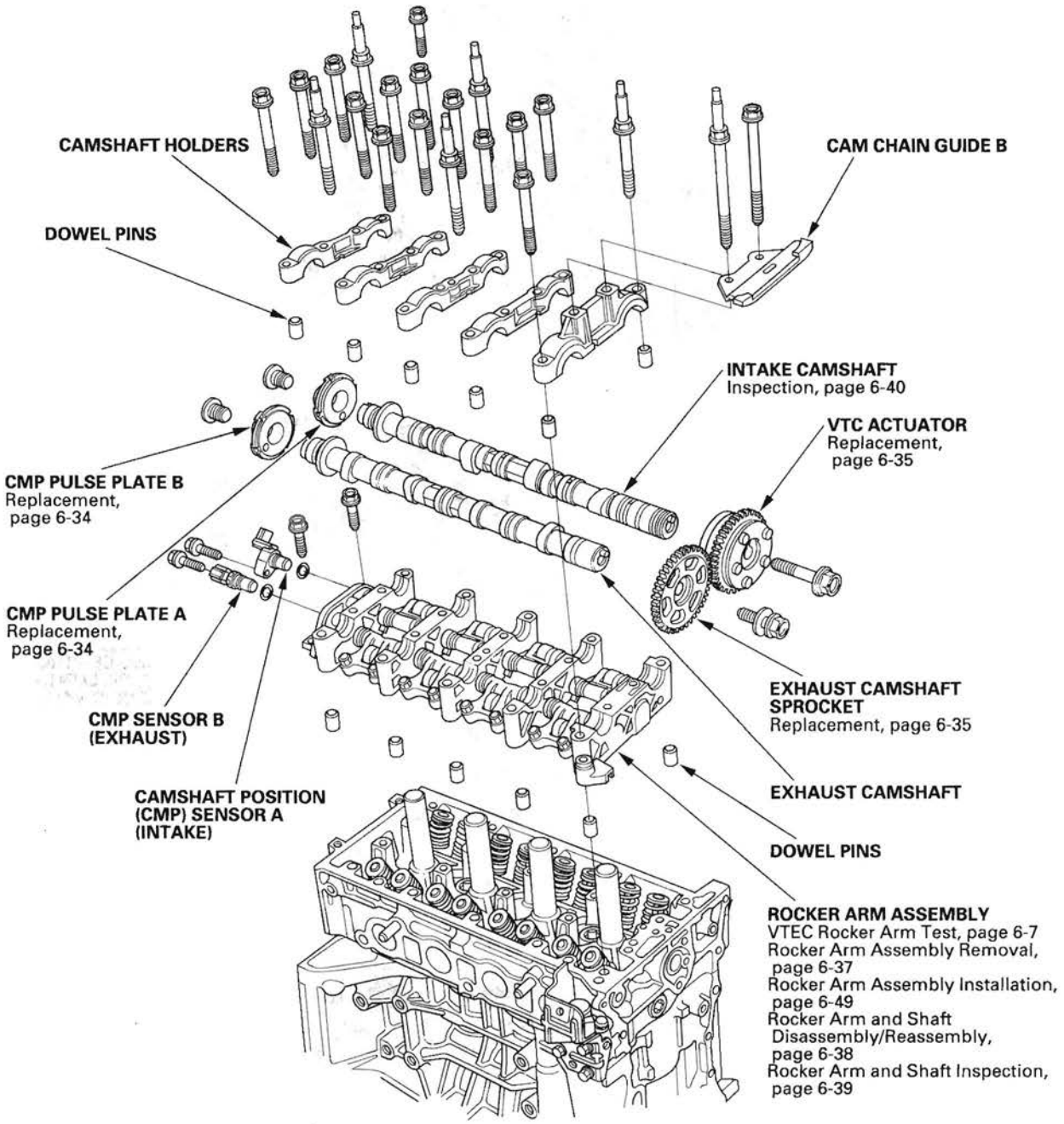

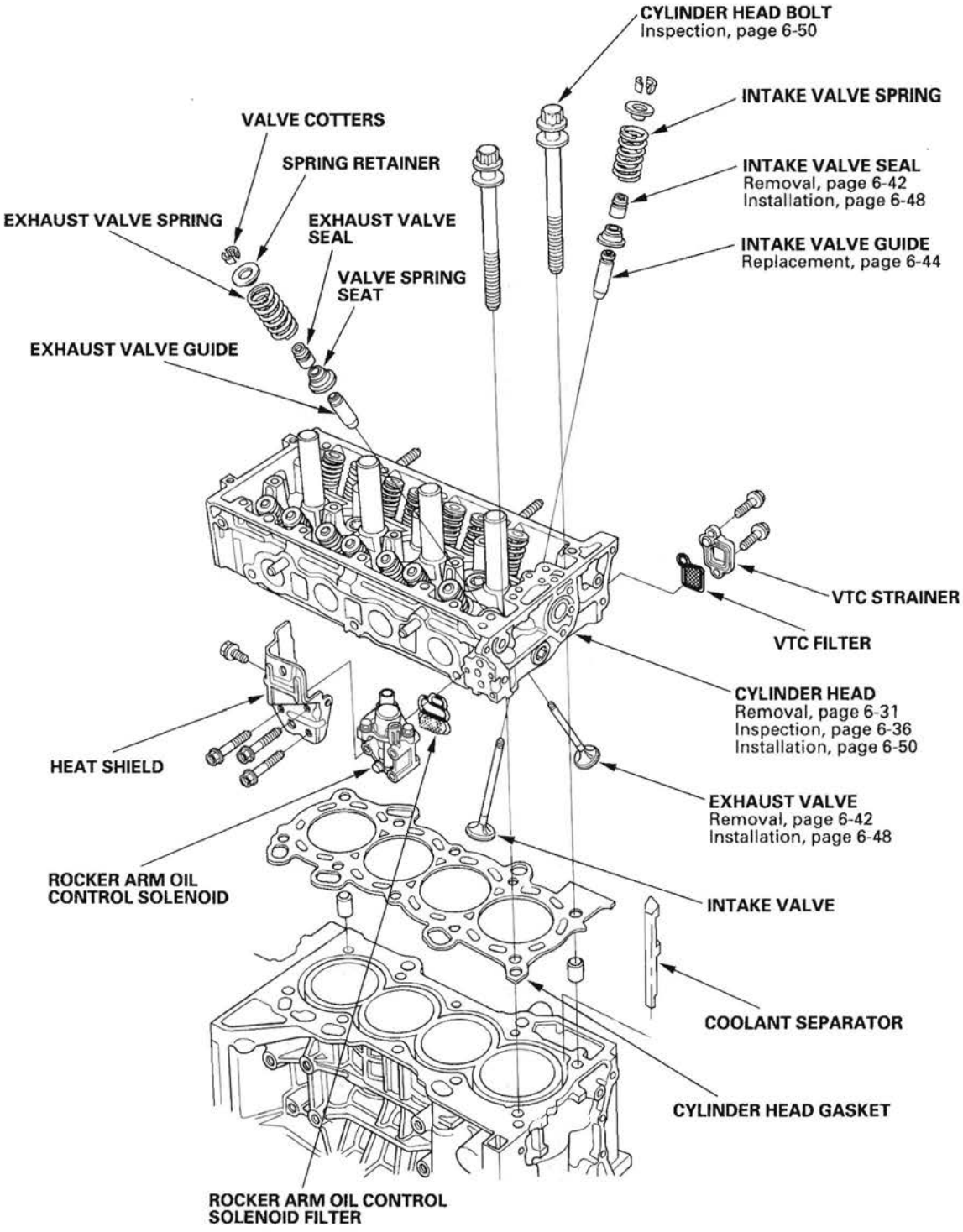
CYLINDER HEAD BOLT
Inspection, page 6-50
INTAKE VALVE SPRING
VALVE COTTERS
SPRING RETAINER
INTAKE VALVE SEAL
Removal, page 6-42
Installation, page 6-48
EXHAUST VALVE SPRING
EXHAUST VALVE SEAL
INTAKE VALVE GUIDE
Replacement, page 6-44
VALVE SPRING SEAT
EXHAUST VALVE GUIDE
VTC STRAINER
VTC FILTER
CYLINDER HEAD
Removal, page 6-31
Inspection, page 6-36
Installation, page 6-50
HEAT SHIELD
EXHAUST VALVE
Removal, page 6-42
Installation, page 6-48
ROCKER ARM OIL CONTROL SOLENOID
INTAKE VALVE
COOLANT SEPARATOR
CYLINDER HEAD GASKET
ROCKER ARM OIL CONTROL SOLENOID FILTER

Engine Compression Inspection

NOTE: After this inspection, you must reset the powertrain control module (PCM), otherwise the PCM will continue to stop the injectors from functioning. Select PCM reset using the Honda Diagnostic System (HDS) (see page 11-4).

1. Warm up the engine to normal operating temperature (cooling fan comes on).
2. Turn the ignition switch OFF.
3. Connect the HDS to the data link connector (DLC) (see step 2 on page 11-3).
4. Turn the ignition switch ON (II).
5. Make sure the HDS communicate, with the vehicle and the PCM. If it doesn't communicate, troubleshoot the DLC circuit (see page 11-197).
6. Select PGM-FI, INSPECTION, then ALL INJECTORS OFF on the HDS.
7. Remove the four ignition coils (see page 4-19).
8. Remove the four spark plugs.
9. Attach the compression gauge to the spark plug hole.

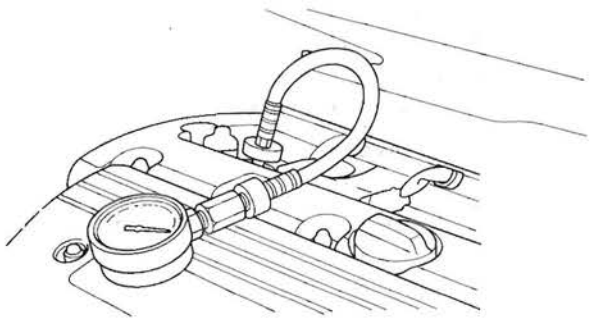

10. Open the throttle fully, then crank the engine with the starter motor and measure the compression.

    Compression Pressure:
    Above 930 kPa (9.5 kgf/cm², 135 psi)

11. Measure the compression on the remaining cylinders.

    Maximum Variation:
    Within 200 kPa (2.0 kgf/cm², 28 psi)

12. If the compression is not within specifications, check the following items, then remeasure the compression.

    - Damaged or worn valves and seats
    - Damaged cylinder head gasket
    - Damaged or worn piston rings
    - Damaged or worn piston and cylinder bore

13. Select the PCM reset (see page 11-4) to cancel the ALL INJECTORS OFF function on the HDS.

VTEC Rocker Arm Test

Special Tools Required
- Air pressure regulator 07AAJ-PNAA101
- VTEC air adapter 07ZAJ-PNAA101
- VTEC air stopper 07ZAJ-PNAA200
- Air joint adapter 07ZAJ-PNAA300

1. Start the engine, and let it run for 5 minutes, then turn the ignition switch OFF.
2. Remove the cylinder head cover (see page 6-29).
3. Set the No. 1 piston at top dead center (TDC) (see step 5 on page 6-13).
4. Verify that the intake primary rocker arm (A) moves independently of the intake secondary rocker arm (B).
   - If the intake primary rocker arm does not move, remove the primary and secondary rocker arms as an assembly and check that the pistons in the secondary and primary rocker arms move smoothly (see page 6-39). If any rocker arm needs replacing, replace the primary and secondary rocker arms as an assembly, and test.
   - If the intake primary rocker arm moves freely, go to step 5.

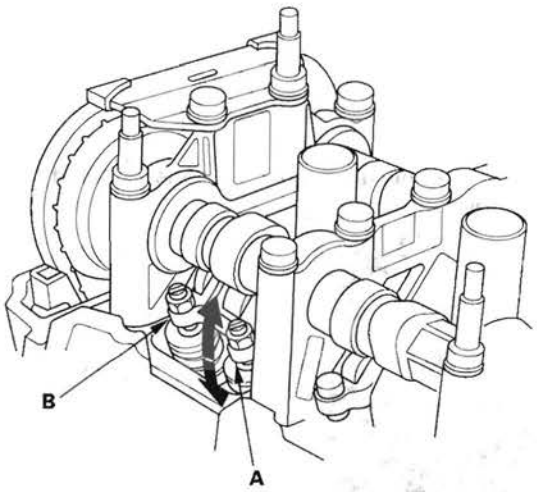

5. Repeat step 4 on the remaining intake primary rocker arms with each piston at TDC. When all the primary rocker arms pass the test, go to step 6.
6. Check that the air pressure on the shop air compressor gauge indicates over 400 kPa (4 kgf/cm², 57 psi).
7. Inspect the valve clearance (see page 6-9).
8. Remove the sealing bolt (A) from the relief hole, and install the VTEC air stopper (B).

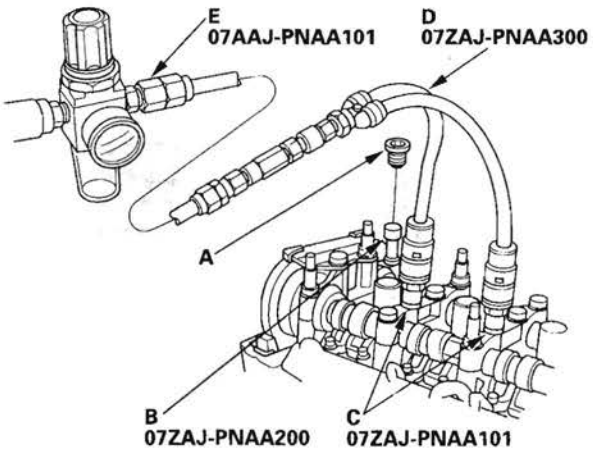

9. Remove the No. 2 and No. 3 camshaft holder bolts, and install the VTEC air adapters (C) finger-tight.
10. Connect the air joint adapter (D) and air pressure regulator (E).

(cont'd)

VTEC Rocker Arm Test (cont'd)

11. Loosen the valve on the regulator, and apply the specified air pressure.

    Specified Air Pressure:
    290 kPa (3.0 kgf/cm², 42 psi)

    NOTE: If the synchronizing piston does not move after applying air pressure; move the primary or secondary rocker arm up and down manually by rotating the crankshaft clockwise.

12. With the specified air pressure applied, move the intake primary rocker arm (A) for the No. 1 cylinder. The primary rocker arm and secondary rocker arm (B) should move together.

    If the intake secondary rocker arm does not move, remove the primary and secondary rocker arms as an assembly, and check that the pistons in the primary and secondary rocker arms move smoothly. If any rocker arm needs replacing, replace the primary and secondary rocker arms as an assembly, and test.

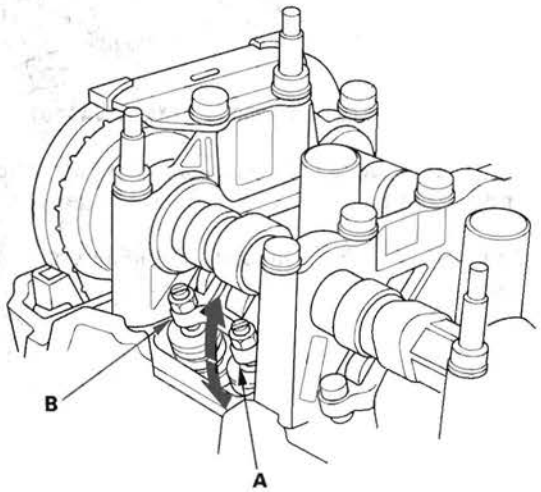

13. Remove the special tools.

14. Tighten the camshaft holder mounting bolts to 22 N·m (2.2 kgf·m, 16 lbf·ft).

15. Tighten the sealing bolt to 20 N·m (2.0 kgf·m, 14 lbf·ft).

16. Install the cylinder head cover (see page 6-30).

VTC Actuator Inspection

1. Remove the cam chain (see page 6-13).

2. Loosen the rocker arm adjusting screws (see step 2 on page 6-37).

3. Remove the camshaft holder (see step 3 on page 6-37).

4. Remove the intake camshaft.

5. Check that the variable valve timing control (VTC) actuator is locked by turning the VTC actuator counterclockwise. If not locked, turn the VTC actuator clockwise until it stops, then recheck it. If it is still not locked, replace the VTC actuator.

6. Seal the advance holes (A) and retard holes (B) in the No. 1 camshaft journal with tape.

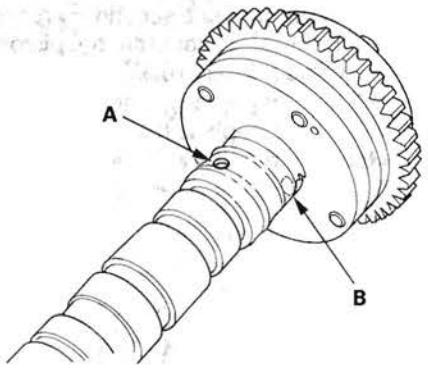

7. Punch a hole in the tape over one of the advance holes.

8. Apply air to the advance hole to release the lock.

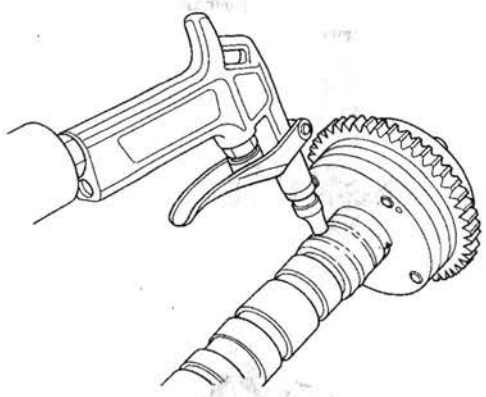

9. Check that the VTC actuator moves smoothly. If the VTC actuator does not move smoothly, replace the VTC actuator.

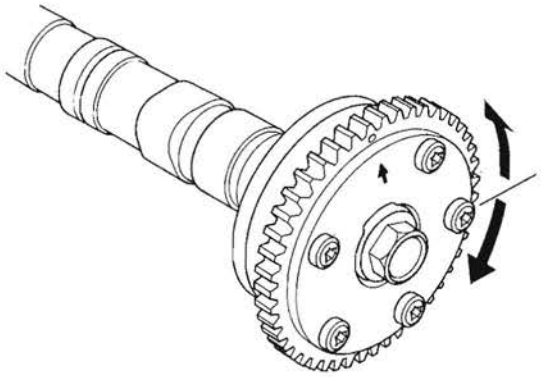

10. Remove the tape and adhesive residue from the camshaft journal.

11. Make sure the punch marks on the VTC actuator and exhaust camshaft sprocket are facing up, then set the camshafts in the head (see step 6 on page 6-49).

12. Set the camshaft holders and chain guide B in place (see step 7 on page 6-49).

13. Tighten the camshaft holder bolts to the specified torque (see step 8 on page 6-49).

14. Hold the camshaft, and turn the VTC actuator clockwise until you hear it click. Make sure to lock the VTC actuator by turning it.

15. Install the cam chain (see page 6-16).

16. Adjust the valve clearance (see page 6-9).

Special Tools Required
- Adjuster 07MAA-PR70110
- Locknut wrench 07MAA-PR70120

NOTE: Adjust the valves only when the cylinder head temperature is less than 100 °F (38 °C).

1. Remove the cylinder head cover (see page 6-29).

2. Set the No. 1 piston at top dead center (TDC). The punch mark (A) on the variable valve timing control (VTC) actuator and the punch mark (B) on the exhaust camshaft sprocket should be at the top. Align the TDC marks (C) on the VTC actuator and exhaust camshaft sprocket.

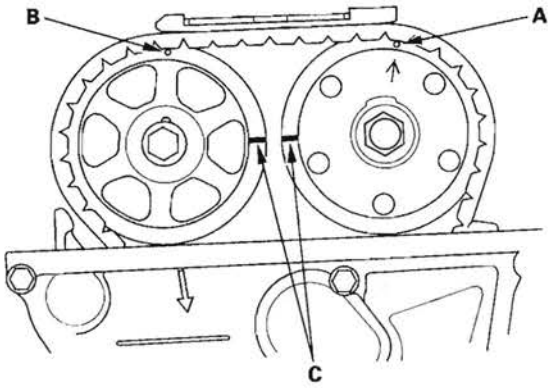

(cont'd)

Valve Clearance Adjustment (cont'd)

3. Select the correct thickness feeler gauge for the valves you're going to check.

Valve Clearance
Intake: 0.21—0.25 mm (0.008—0.010 in.)
Exhaust: 0.28—0.32 mm (0.011—0.013 in.)

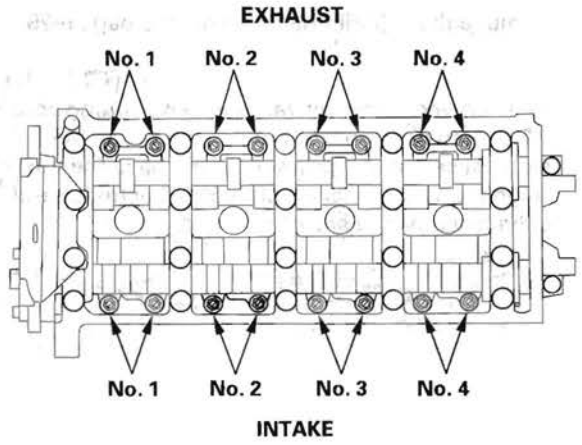

4. Insert the feeler gauge (A) between the adjusting screw (B) and the end of the valve stem, and slide it back and forth; you should feel a slight amount of drag.

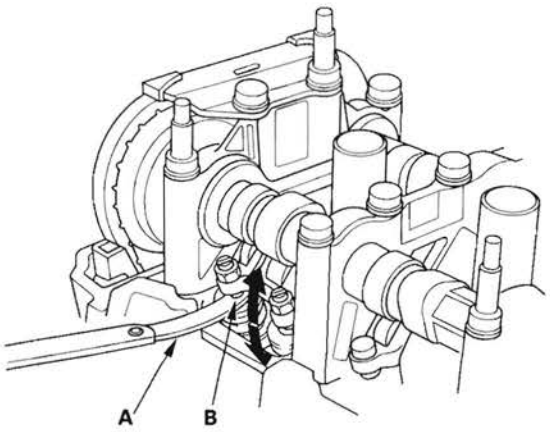

5. If you feel too much or too little drag, loosen the locknut with the locknut wrench and adjuster, and turn the adjusting screw until the drag on the feeler gauge is correct.

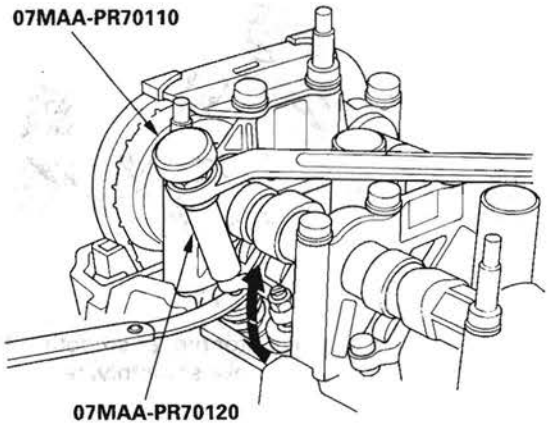

6. Tighten the locknut to the specified torque, and recheck the clearance. Repeat the adjustment if necessary.

Specified Torque
Intake:
7 x 0.75 mm
20 N·m (2.0 kgf·m, 14 lbf·ft)
Apply engine oil to the nut threads.
Exhaust:
7 x 0.75 mm
14 N·m (1.4 kgf·m, 10 lbf·ft)
Apply engine oil to the nut threads.

7. Rotate the crankshaft 180 ° clockwise (camshaft pulley turns 90 °).

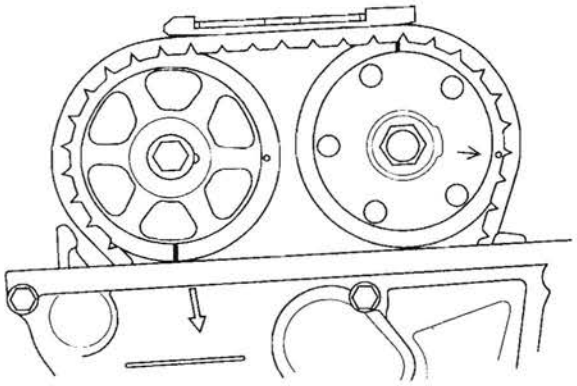

8. Check and, if necessary, adjust the valve clearance on No. 3 cylinder.

9. Rotate the crankshaft 180 ° clockwise (camshaft pulley turns 90 °).

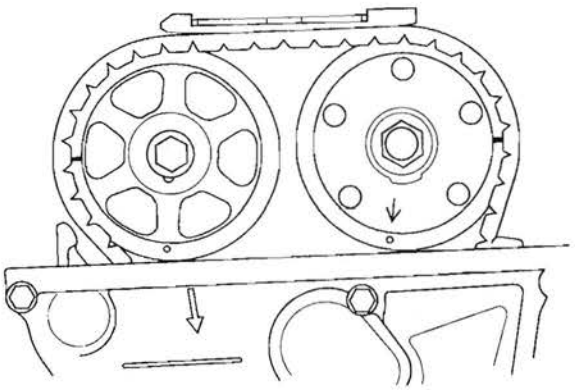

10. Check and, if necessary, adjust the valve clearance on No. 4 cylinder.

11. Rotate the crankshaft 180 ° clockwise (camshaft pulley turns 90 °).

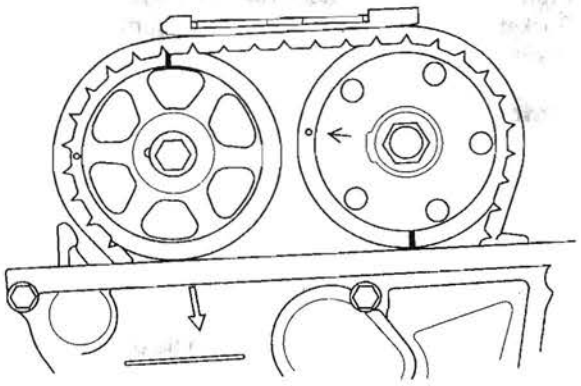

12. Check and, if necessary, adjust the valve clearance on No. 2 cylinder.

13. Install the cylinder head cover (see page 6-30).

Crankshaft Pulley Removal and Installation

Special Tools Required
- Holder handle 07JAB-001020A
- Crankshaft pulley holder 070AB-RJA0100
- Socket, 19 mm 07JAA-001020A or a commercially available 19 mm socket

Removal

1. Remove the front wheels.
2. Remove the splash shield (see step 21 on page 5-5).
3. Remove the drive belt (see page 4-29).
4. Hold the pulley with holder handle (A) and holder attachment (B).

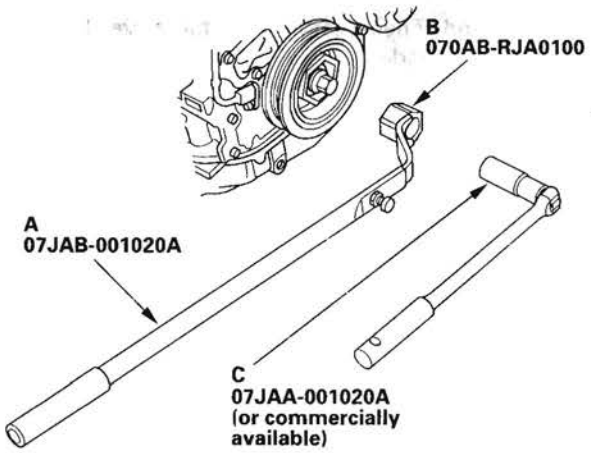

5. Remove the bolt with a 19 mm socket (C) and breaker bar, then remove the crankshaft pulley.

Installation

1. Clean the crankshaft pulley (A), crankshaft (B), bolt (C), and washer (D). Lubricate as shown.

○: **Clean**
●: **Lubricate**

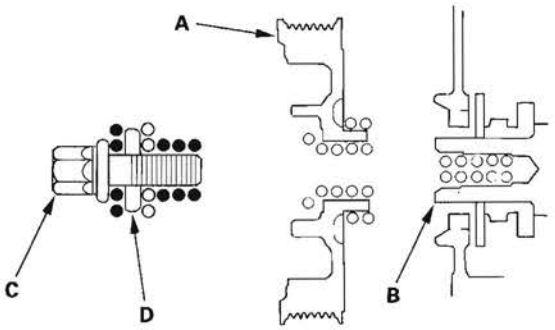

2. Install the crankshaft pulley, and hold the pulley with holder handle (A) and holder attachment (B).

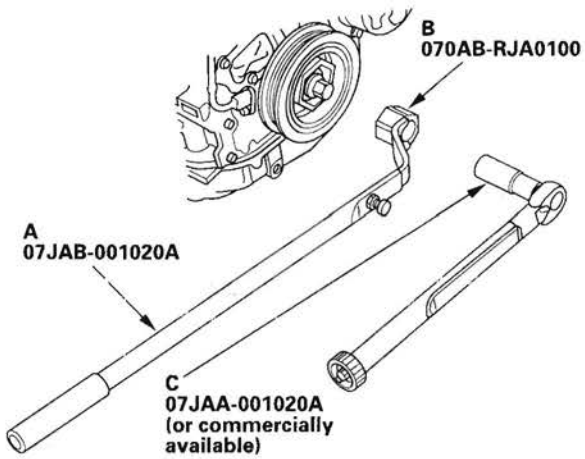

3. Tighten the bolt to 49 N·m (5.0 kgf·m, 36 lbf·ft) with a torque wrench and 19 mm socket (C). Do not use an impact wrench.
4. Tighten the pulley bolt an additional 90 °.
5. Install the drive belt (see page 4-29).
6. Install the splash shield (see step 34 on page 5-18).
7. Install the front wheels.

Cam Chain Removal

NOTE: Keep the cam chain away from magnetic fields.

1. Remove the front wheels.
2. Remove the splash shield (see step 21 on page 5-5).
3. Remove the drive belt (see page 4-29).
4. Remove the cylinder head cover (see page 6-29).
5. Set the No. 1 piston at top dead center (TDC). The punch mark (A) on the variable valve timing control (VTC) actuator and the punch mark (B) on the exhaust camshaft sprocket should be at the top. Align the TDC marks (C) on the VTC actuator and exhaust camshaft sprocket.

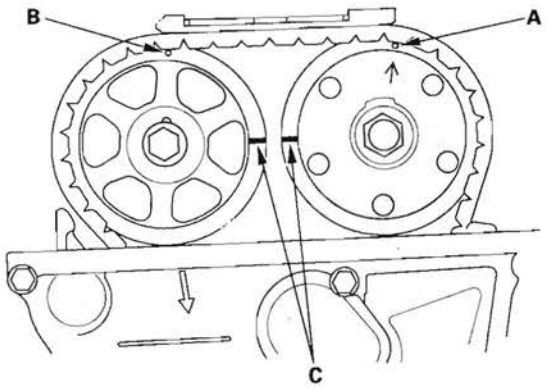

6. Disconnect the crankshaft position (CKP) sensor connector (A) and VTC oil control solenoid valve connector (B).

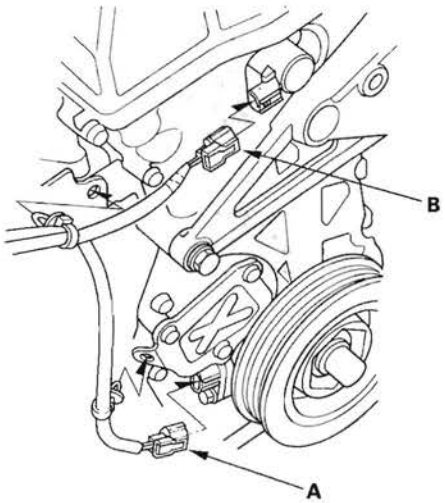

7. Remove the VTC oil control solenoid valve (see page 11-284).
8. Remove the crankshaft pulley (see page 6-12).
9. Support the engine with a jack and a wood block under the oil pan.
10. Remove the upper torque rod.

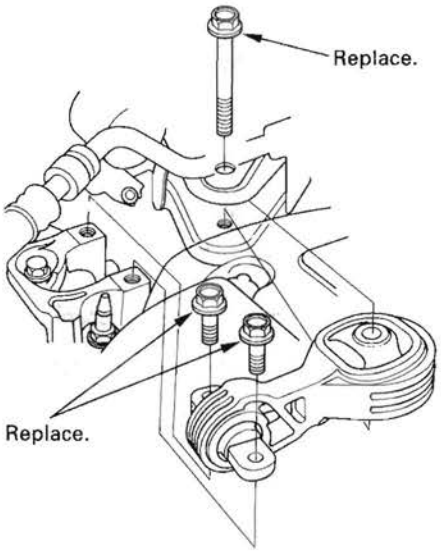

(cont'd)

Cam Chain Removal (cont'd)

11. Remove the ground cable (A), then remove the side engine mount bracket (B).

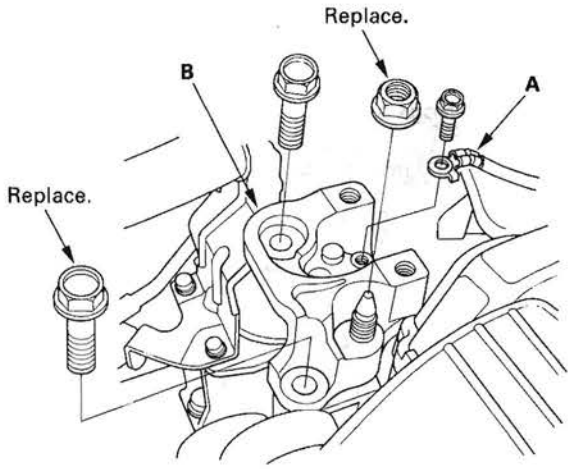

12. Remove the side engine mount bracket mounting bolts.

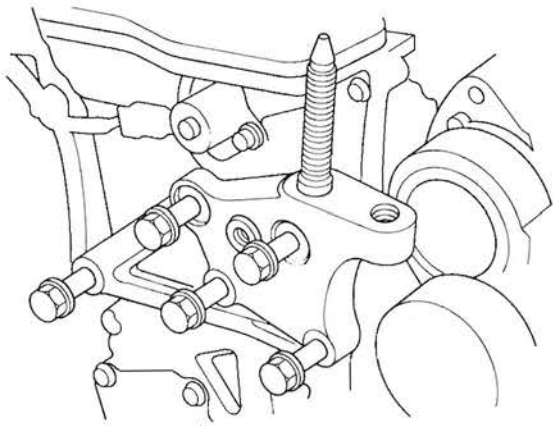

13. Remove the cam chain case (A) and side engine mount bracket (B).

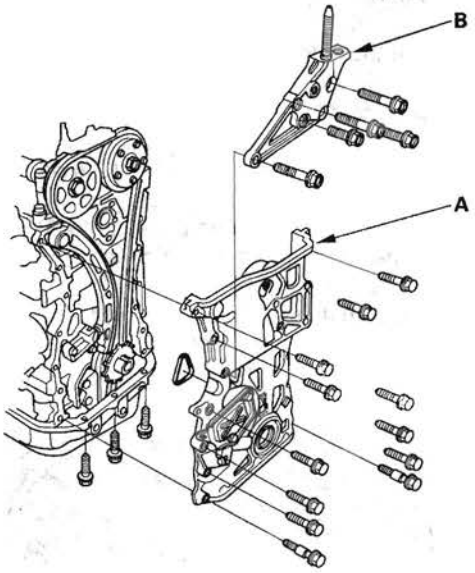

14. Loosely install the crankshaft pulley.

15. Turn the crankshaft counterclockwise to compress the auto-tensioner.

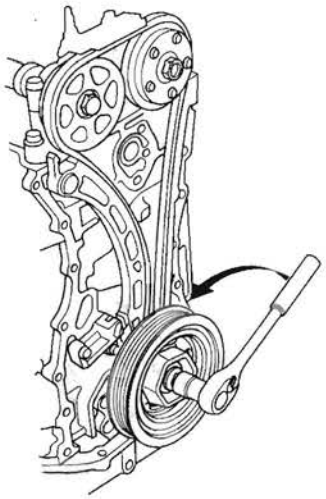

16. Align the holes on the lock (A) and the auto-tensioner (B), then insert a 1.2 mm (0.05 in.) diameter pin or lock pin (P/N 14511-PNA-003) (C) into the holes. Turn the crankshaft clockwise to secure the pin.

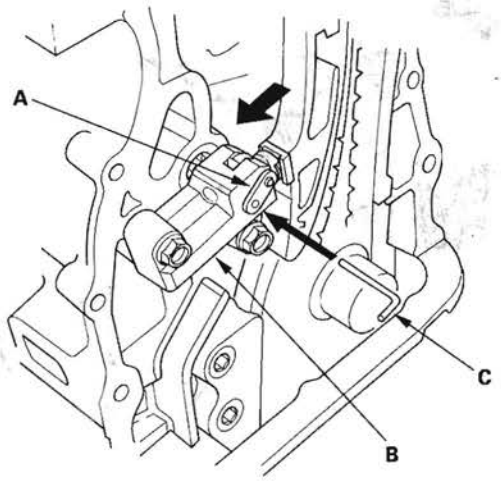

17. Remove the auto-tensioner.

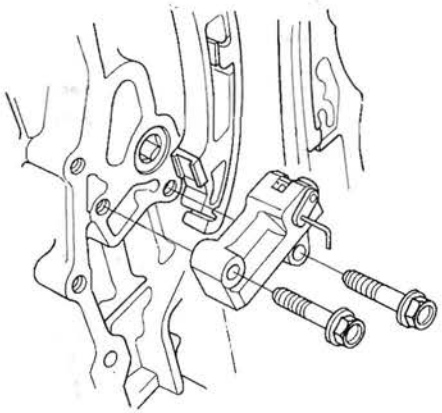

18. Remove cam chain guide B.

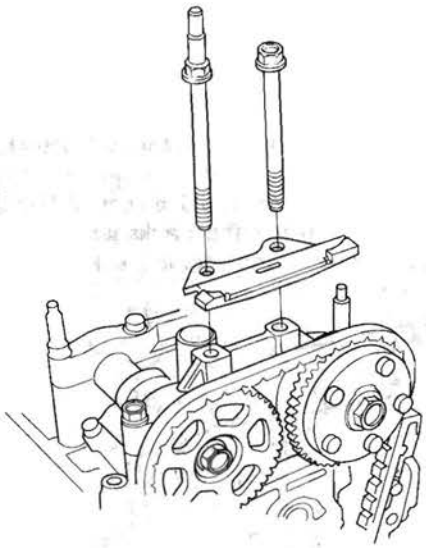

19. Remove cam chain guide A and tensioner arm (B).

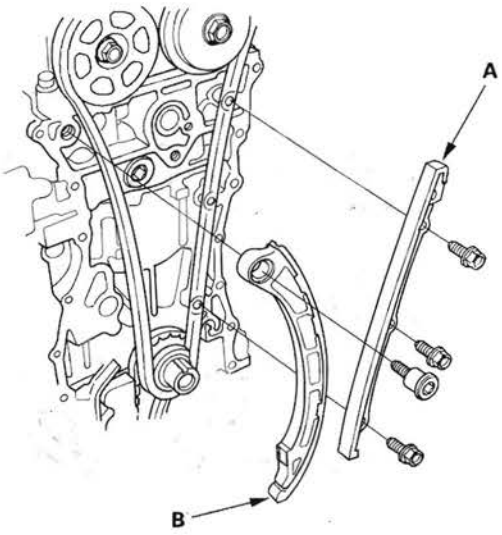

20. Remove the cam chain.

Cam Chain Installation

NOTE:
- Keep the cam chain away from magnetic fields.
- Before this procedure, check that the variable valve timing control (VTC) actuator is locked by turning the VTC actuator counterclockwise. If not locked, turn the VTC actuator clockwise until it stops, then recheck it. If it is still not locked, replace the VTC actuator.

1. Set the crankshaft to top dead center (TDC). Align the TDC mark (A) on the crankshaft sprocket with the pointer (B) on the engine block.

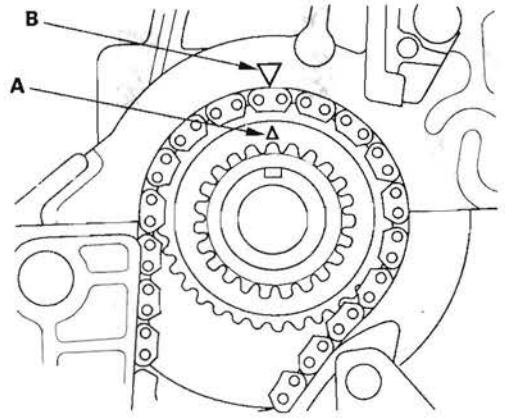

2. Set the camshafts to TDC. The punch mark (A) on the VTC actuator and the punch mark (B) on the exhaust camshaft sprocket should be at the top. Align the TDC marks (C) on the VTC actuator and exhaust camshaft sprocket.

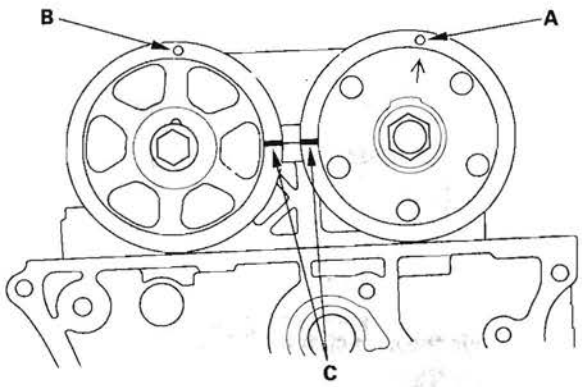

3. To hold the intake camshaft, insert a change detent arm shaft (P/N 24635-P6H-003) (A) into the maintenance hole in the camshaft position (CMP) pulse plate A (B) and through No. 5 rocker shaft holder (C).

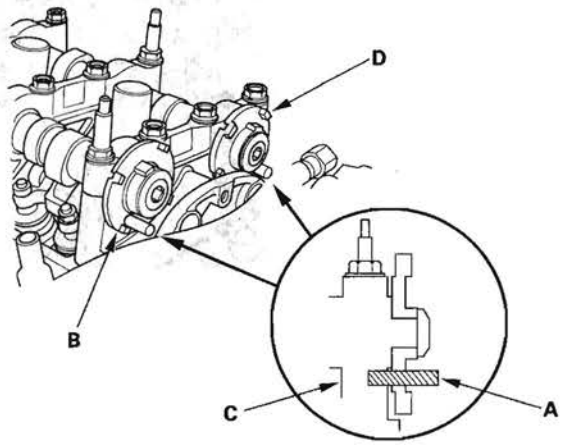

4. To hold the exhaust camshaft, insert a change detent arm shaft (P/N 24635-P6H-003) (A) into the maintenance hole in the CMP pulse plate B (D) and through No. 5 rocker shaft holder (C).

5. Install the cam chain on the crankshaft sprocket with the colored link plate (A) aligned with the mark (B) on the crankshaft sprocket.

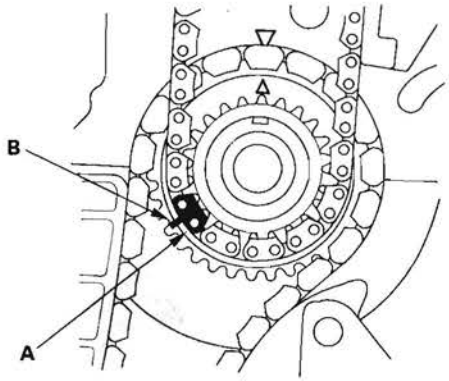

6. Install the cam chain on the VTC actuator and the exhaust camshaft sprocket with the punch marks (A) aligned with the center of the two colored link plates (B).

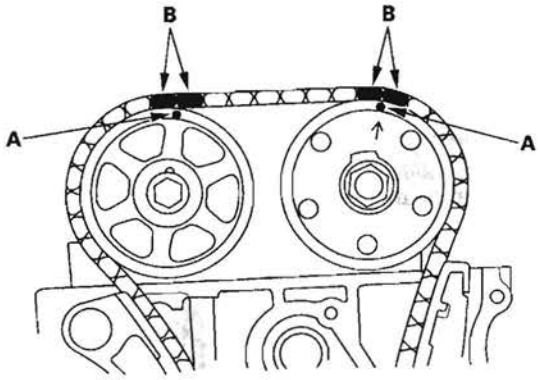

7. Install cam chain guide A and tensioner arm (B).

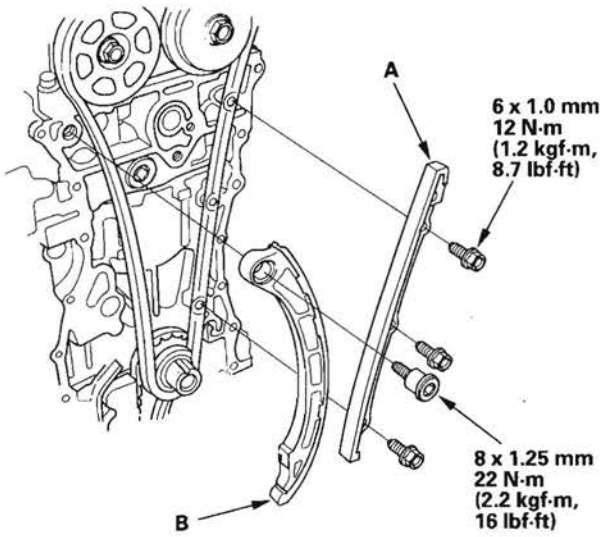

8. Install the auto-tensioner.

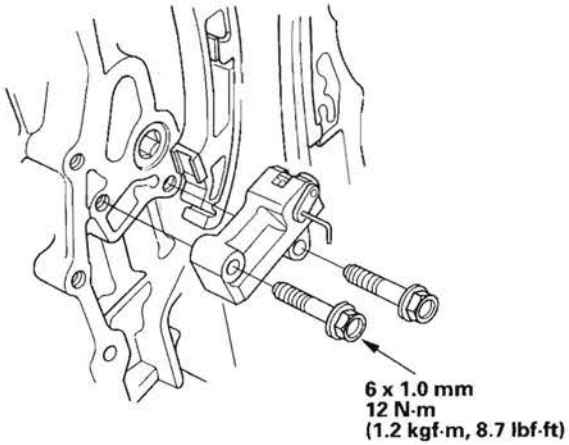

9. Install cam chain guide B.

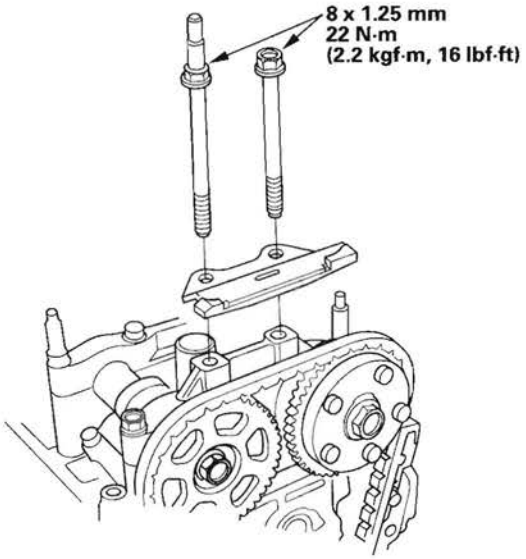

(cont'd)

Cam Chain Installation (cont'd)

10. Remove the pin or lock pin (P/N 14511-PNA-003) from the auto-tensioner.

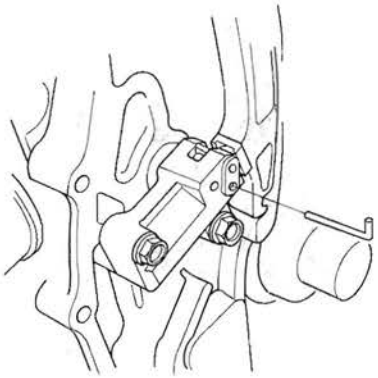

11. Remove the change detent arm shafts (P/N 24635-P6H-003).

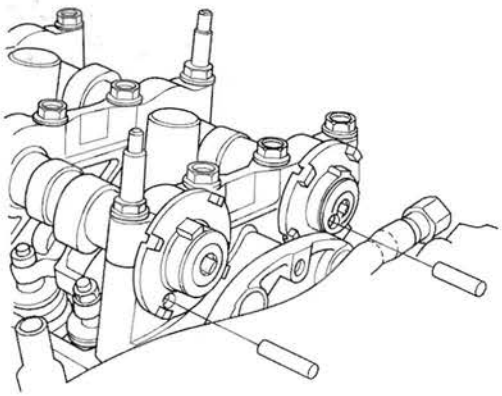

12. Check the chain case oil seal for damage. If the oil seal is damaged, replace the chain case oil seal (see page 6-24).

13. Remove old liquid gasket from the chain case mating surfaces, bolts, and bolt holes.

14. Clean and dry the chain case mating surfaces.

15. Apply liquid gasket, P/N 08717-0004, 08718-0001, 08718-0003, or 08718-0009, evenly to the engine block mating surface of the chain case. Install the component within 5 minutes of applying the liquid gasket.

NOTE:
- If you apply liquid gasket P/N 08718-0012, the component must be installed within 4 minutes.
- If too much time has passed after applying the liquid gasket, remove the old liquid gasket and residue, then reapply new liquid gasket.

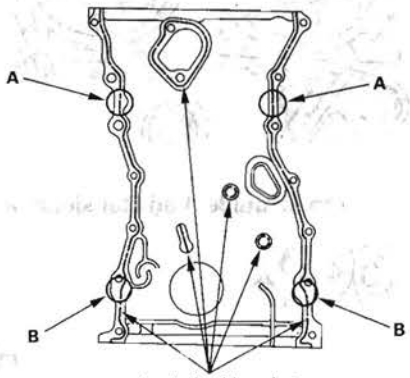

Apply liquid gasket along the bloken line.

16. Apply liquid gasket to the engine block upper surface contact areas (A) on the chain case and lower block upper surface contact areas (B) on the chain case.

17. Apply liquid gasket, P/N 08717-0004, 08718-0001, 08718-0003, or 08718-0009, evenly to the oil pan mating surface of the chain case. Install the component within 5 minutes of applying the liquid gasket.

NOTE:
- If you apply liquid gasket P/N 08718-0012, the component must be installed within 4 minutes.
- If too much time has passed after applying the liquid gasket, remove the old liquid gasket and residue, then reapply new liquid gasket.

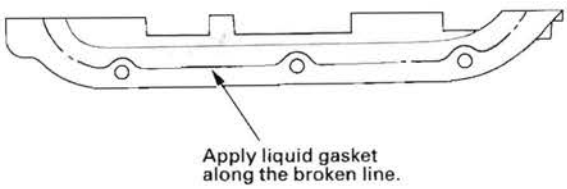
Apply liquid gasket along the broken line.

18. Install the new O-ring (A), side engine mount bracket (B), and mounting bolts (C) on the chain case. Set the edge of the chain case (D) to the edge of the oil pan (E), then install the chain case on the engine block (F). Wipe off the excess liquid gasket on the oil pan and chain case mating area.

NOTE:
- When installing the chain case, do not slide the bottom surface onto the oil pan mounting surface.
- Wait at least 30 minutes before filling the engine with oil.
- Do not run the engine for at least 3 hours after installing the chain case.

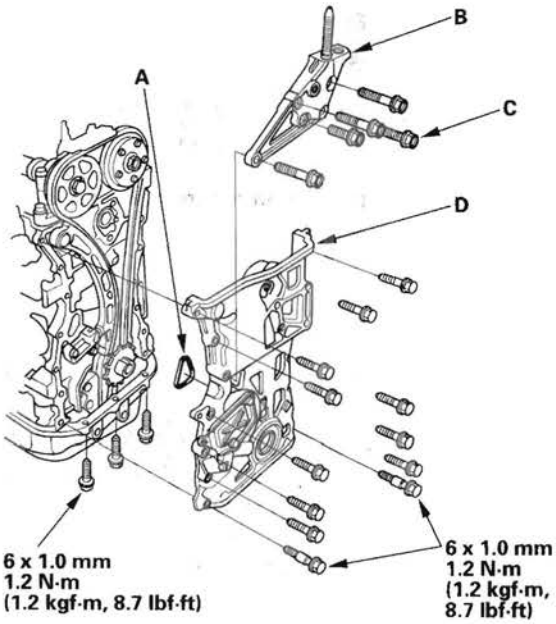

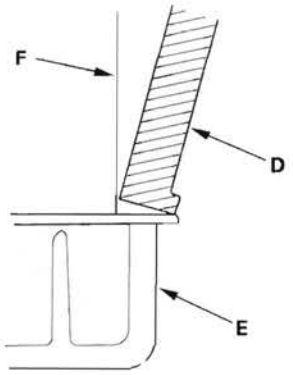

19. Tighten the side engine mount bracket mounting bolts.

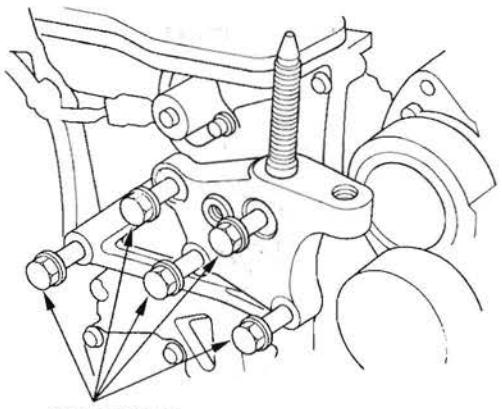

20. Install the side engine mount bracket (A), then loosely tighten the new bolt and nut (B), and loosely tighten the bolt (C).

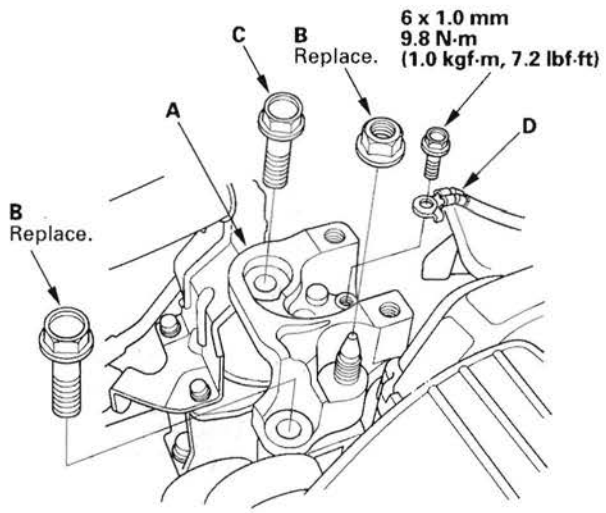

21. Install the ground cable (D).

(cont'd)

Cam Chain Installation (cont'd)

22. Remove the air cleaner housing assembly (see page 11-340).

23. Loosen the transmission mounting bolt and nuts (A).

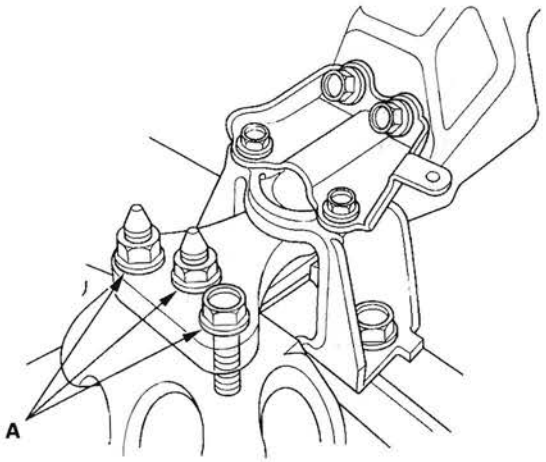

24. Raise the lift to full height.

25. Loosen the lower torque rod mounting bolt (A).

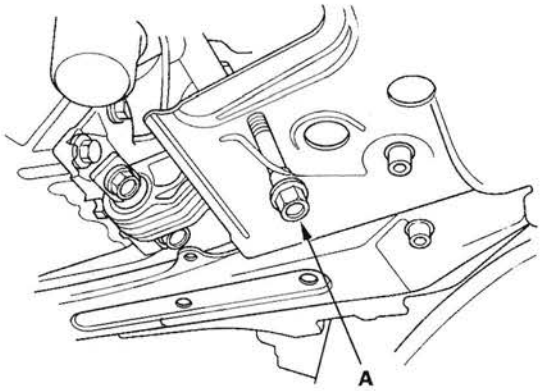

26. Lower the vehicle on the lift.

27. Tighten the side engine mount mounting bolts and nut.

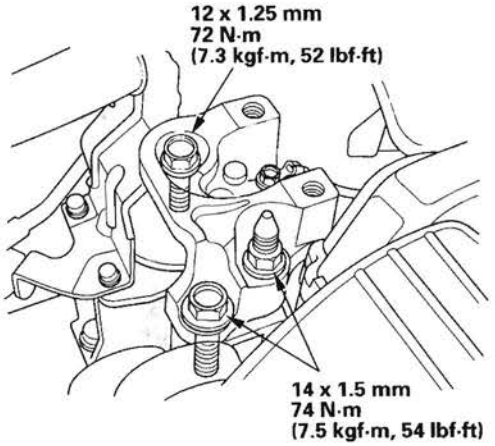

28. Tighten the transmission mounting bolt and nuts.

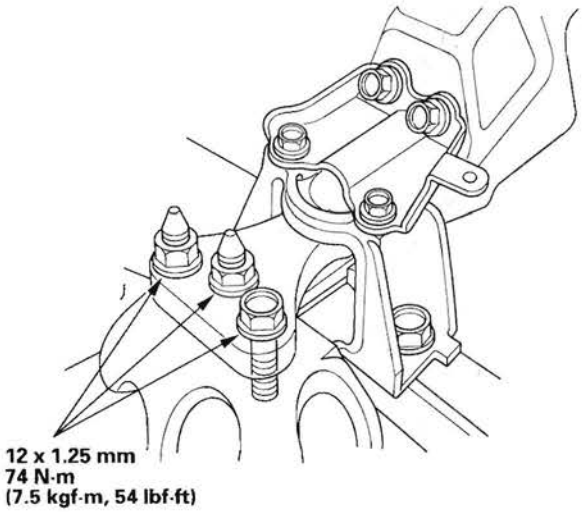

29. Raise the lift to full height.

30. Tighten the lower torque rod mounting bolt.

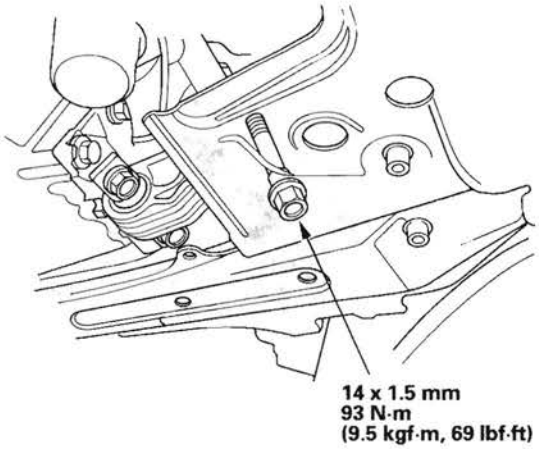

31. Lower the vehicle on the lift.

32. Install the air cleaner housing assembly (see page 11-340).

33. Install the upper torque rod, then tighten the new upper torque rod mounting bolts in the numbered sequence shown.

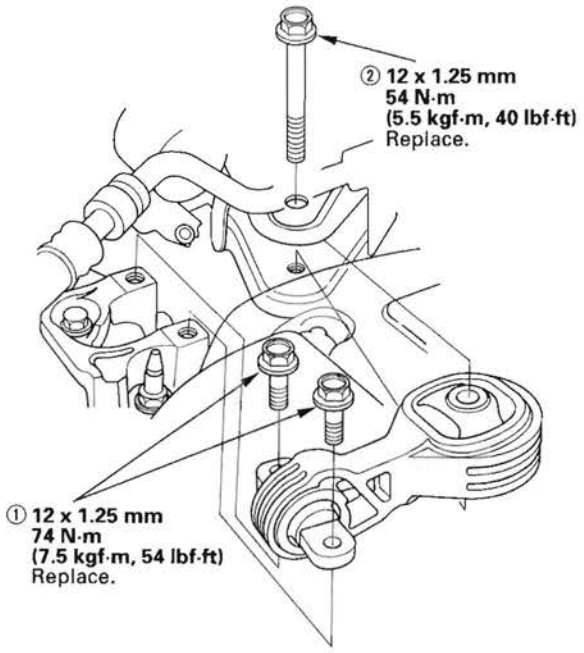

34. Install the crankshaft pulley (see page 6-12).

35. Install the VTC oil control solenoid valve (see page 11-284).

36. Connect the crankshaft position (CKP) sensor connector (A) and VTC oil control solenoid valve connector (B).

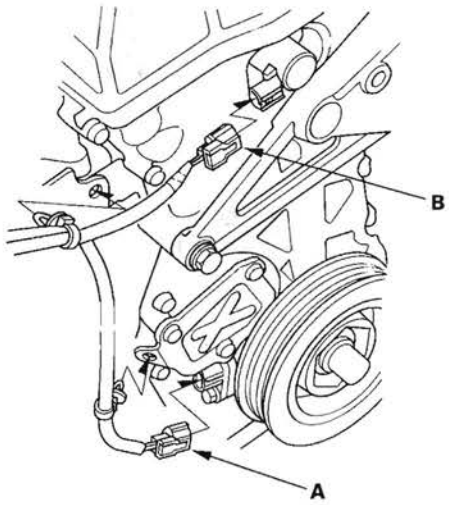

37. Install the cylinder head cover (see page 6-30).

38. Install the drive belt (see page 4-29).

39. Do the CKP pattern clear/CKP learn procedure (see page 11-4).

Auto-tensioner Removal and Installation

Removal

1. Remove the chain case cover.

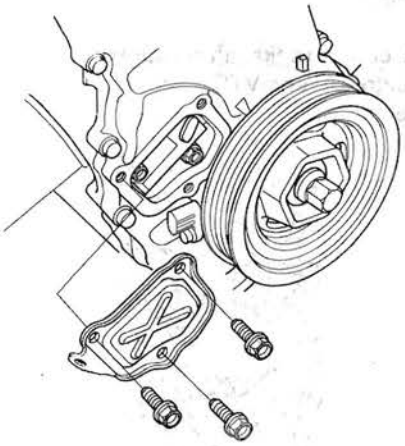

2. Turn the crankshaft counterclockwise to compress the auto-tensioner.

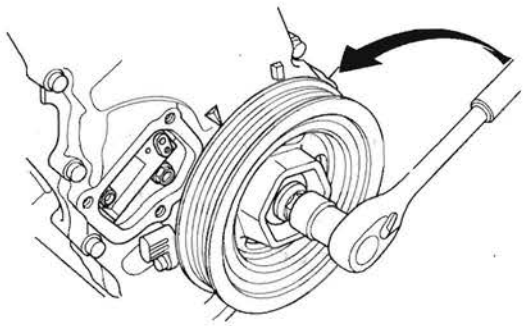

3. Align the holes on the lock (A) and the auto-tensioner (B), then insert a 1.2 mm (0.05 in.) diameter pin or lock pin (P/N 14511-PNA-003) (C) into the holes. Turn the crankshaft clockwise to secure the pin.

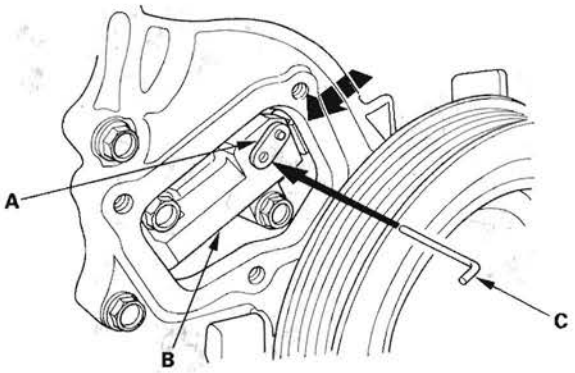

4. Remove the auto-tensioner.

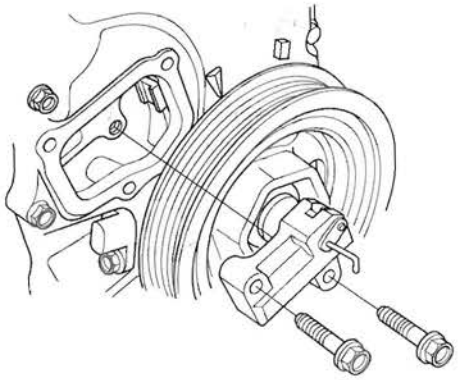

Installation

1. Install the auto-tensioner.

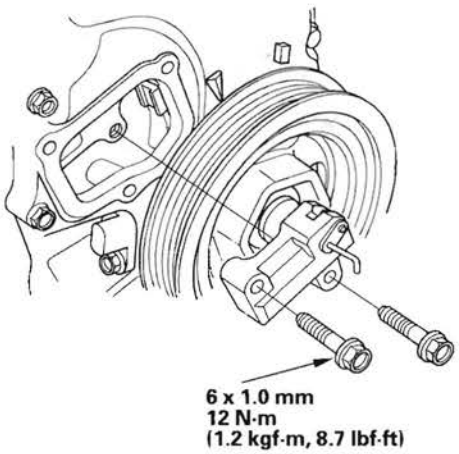

2. Remove the pin or lock pin (P/N 14511-PNA-003) from the auto-tensioner.

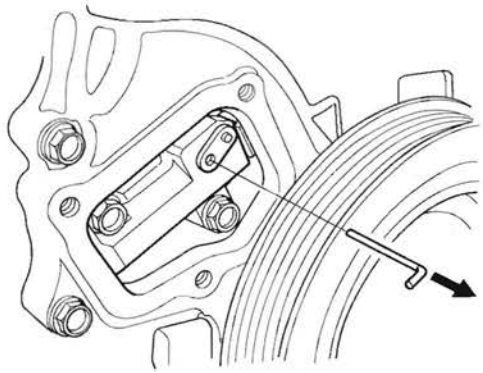

3. Remove old liquid gasket from the chain case cover mating surfaces, bolts, and bolt holes.

4. Clean and dry the chain case cover mating surfaces.

5. Apply liquid gasket, P/N 08717-0004, 08718-0001, 08718-0003, or 08718-0009, evenly to the chain case mating surface of the chain case cover. Install the component within 5 minutes of applying the liquid gasket.

NOTE:
- If you apply liquid gasket P/N 08718-0012, the component must be installed within 4 minutes.
- If too much time has passed after applying the liquid gasket, remove the old liquid gasket and residue, then reapply new liquid gasket.

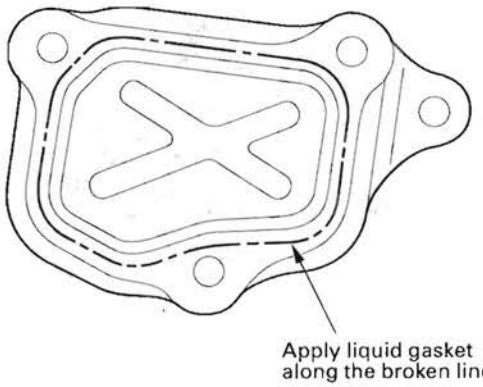

6. Install the chain case cover.

NOTE:
- Wait at least 30 minutes before filling the engine with oil.
- Do not run the engine for at least 3 hours after installing the chain case cover.

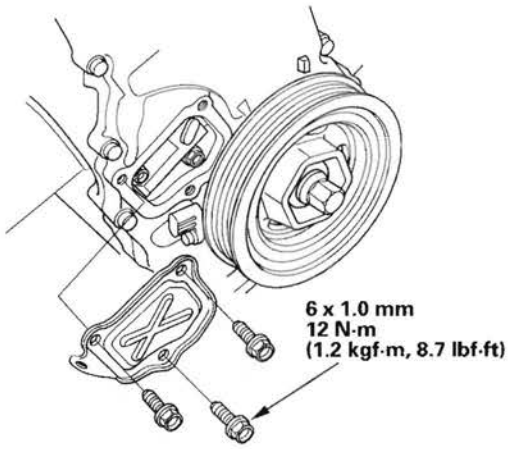

Chain Case Oil Seal Installation

Special Tools Required
- Driver 07749-0010000
- Attachment, 52 x 55 mm 07746-0010400

1. Use the driver and attachment to drive a new oil seal squarely into the chain case to the specified installed height.

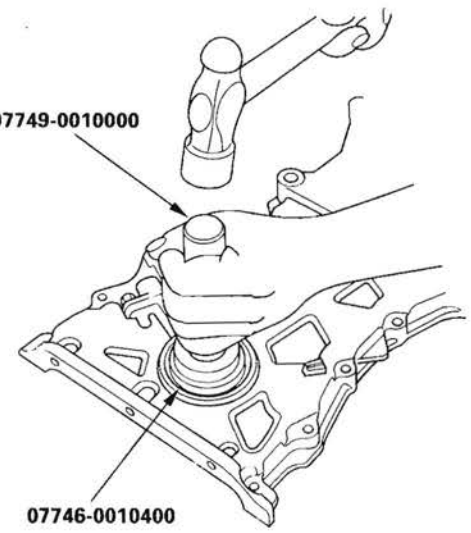

2. Measure the distance between the chain case surface and oil seal.

Oil Seal Installed Height:
33.0—33.7 mm (1.30—1.33 in.)

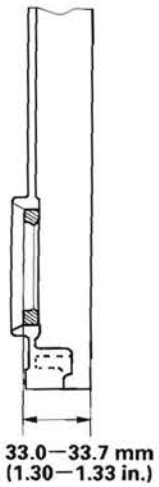

Cam Chain Inspection

1. Remove the front wheels.
2. Remove the splash shield (see step 21 on page 5-5).
3. Remove the drive belt (see page 4-29).
4. Remove the cylinder head cover (see page 6-29).
5. Set the No. 1 piston at top dead center (TDC). The punch mark on the variable valve timing control (VTC) actuator and the punch mark on the exhaust camshaft sprocket should be at the top. Align the TDC marks on the VTC actuator and exhaust camshaft sprocket (see step 5 on page 6-13).
6. Disconnect the crankshaft position (CKP) sensor connector and VTC oil control solenoid valve connector (see step 6 on page 6-13).
7. Remove the VTC oil control solenoid valve (see page 11-284).
8. Remove the crankshaft pulley (see page 6-12).
9. Support the engine with a jack and a wood block under the oil pan.
10. Remove the upper torque rod (see step 10 on page 6-13).
11. Remove the ground cable, then remove the side engine mount bracket (see step 11 on page 6-14).
12. Remove the side engine mount bracket mounting bolts (see step 12 on page 6-14).
13. Remove the cam chain case and side engine mount bracket (see step 13 on page 6-14).
14. Measure the tensioner rod length between the tensioner body and bottom of the flat surface section on the tensioner rod. If the length is more than the service limit, replace the cam chain and the oil pump chain.

Tensioner Rod Length
Service Limit: 13.5 mm (0.53 in.)

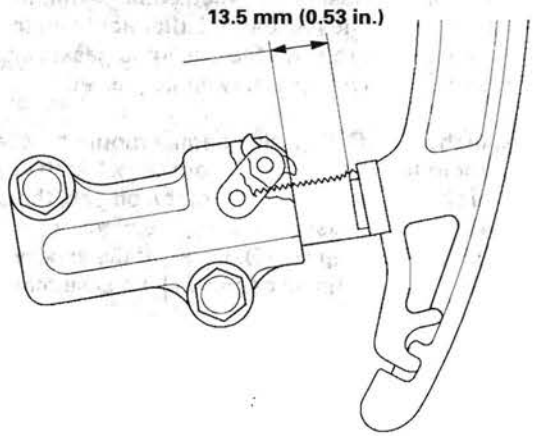

15. Check the chain case oil seal for damage. If the oil seal is damaged, replace the chain case oil seal (see page 6-24).
16. Remove all of the old liquid gasket from the chain case mating surfaces, bolts, and bolt holes.
17. Clean and dry the chain case mating surfaces.
18. Apply liquid gasket, P/N 08717-0004, 08718-0001, 08718-0003, or 08718-0009, evenly to the engine block mating surface of the chain case. Install the component within 5 minutes of applying the liquid gasket (see step 15 on page 6-18).

    NOTE:
    - If you apply liquid gasket P/N 08718-0012, the component must be installed within 4 minutes.
    - If too much time has passed after applying the liquid gasket, remove the old liquid gasket and residue, then reapply new liquid gasket.

19. Apply liquid gasket to the engine block upper surface contact areas on the chain case and lower block upper surface contact areas on the chain case (see step 16 on page 6-18).

(cont'd)

Cam Chain Inspection (cont'd)

20. Apply liquid gasket, P/N 08717-0004, 08718-0001, 08718-0003, or 08718-0009, evenly to the oil pan mating surface of the chain case. Install the component within 5 minutes of applying the liquid gasket (see step 17 on page 6-18).

    NOTE:
    - If you apply liquid gasket P/N 08718-0012, the component must be installed within 4 minutes.
    - If too much time has passed after applying the liquid gasket, remove the old liquid gasket and residue, then reapply new liquid gasket.

21. Install the new O-ring, side engine mount bracket, and mounting bolts on the chain case. Set the edge of the chain case to the edge of the oil pan, then install the chain case on the engine block (see step 18 on page 6-19). Wipe off the excess liquid gasket on the oil pan and chain case mating area.

    NOTE:
    - When installing the chain case, do not slide the bottom surface onto the oil pan mounting surface.
    - Wait at least 30 minutes before filling the engine with oil.
    - Do not run the engine for at least 3 hours after installing the chain case.

22. Tighten the side engine mount bracket mounting bolts (see step 19 on page 6-19).

23. Install the side engine mount bracket, then loosely tighten the new bolt and nut, and loosely tighten the bolt. Install the ground cable (see step 20 on page 6-19).

24. Remove the air cleaner housing assembly (see page 11-340).

25. Loosen the transmission mounting bolt and nuts (see step 23 on page 6-20).

26. Raise the lift to full height.

27. Loosen the lower torque rod mounting bolt (see step 25 on page 6-20).

28. Lower the vehicle on the lift.

29. Tighten the side engine mount mounting bolts and nut (see step 27 on page 6-20).

30. Tighten the transmission mounting bolt and nuts (see step 28 on page 6-20).

31. Raise the lift to full height.

32. Tighten the lower torque rod mounting bolt (see step 30 on page 6-21).

33. Lower the vehicle on the lift.

34. Install the air cleaner housing assembly (see page 11-340).

35. Install the upper torque rod, then tighten the new upper torque rod mounting bolts in the numbered sequence shown (see step 33 on page 6-21).

36. Install the VTC oil control solenoid valve (see page 11-284).

37. Connect the CKP sensor connector and VTC oil control solenoid valve connector (see step 36 on page 6-21).

38. Install the crankshaft pulley (see page 6-12).

39. Install the cylinder head cover (see page 6-30).

40. Install the drive belt (see page 4-29).

41. Do the CKP pattern clear/CKP learn procedure (see page 11-4).

CKP Pulse Plate Replacement

1. Remove the front wheels.
2. Remove the splash shield (see step 21 on page 5-5).
3. Remove the drive belt (see page 4-29).
4. Remove the cylinder head cover (see page 6-29).
5. Set the No. 1 piston at top dead center (TDC). The punch mark on the variable valve timing control (VTC) actuator and the punch mark on the exhaust camshaft sprocket should be at the top. Align the TDC marks on the VTC actuator and exhaust camshaft sprocket (see step 5 on page 6-13).
6. Disconnect the crankshaft position (CKP) sensor connector and VTC oil control solenoid valve connector (see step 6 on page 6-13).
7. Remove the VTC oil control solenoid valve (see page 11-284).
8. Remove the crankshaft pulley (see page 6-12).
9. Support the engine with a jack and a wood block under the oil pan.
10. Remove the upper torque rod (see step 10 on page 6-13).
11. Remove the ground cable, then remove the side engine mount bracket (see step 11 on page 6-14).
12. Remove the side engine mount bracket mounting bolts (see step 12 on page 6-14).
13. Remove the cam chain case and side engine mount bracket (see step 13 on page 6-14).
14. Remove the CKP pulse plate.

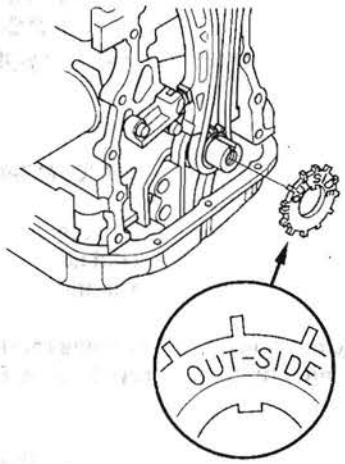

15. Install the CKP pulse plate.
16. Check the chain case oil seal for damage. If the oil seal is damaged, replace the chain case oil seal (see page 6-24).
17. Remove all of the old liquid gasket from the chain case mating surfaces, bolts, and bolt holes.
18. Clean and dry the chain case mating surfaces.
19. Apply liquid gasket, P/N 08717-0004, 08718-0001, 08718-0003, or 08718-0009, evenly to the engine block mating surface of the chain case. Install the component within 5 minutes of applying the liquid gasket (see step 15 on page 6-18).

    NOTE:
    - If you apply liquid gasket P/N 08718-0012, the component must be installed within 4 minutes.
    - If too much time has passed after applying the liquid gasket, remove the old liquid gasket and residue, then reapply new liquid gasket.

20. Apply liquid gasket to the engine block upper surface contact areas on the chain case and lower block upper surface contact areas on the chain case (see step 16 on page 6-18).

(cont'd)

CKP Pulse Plate Replacement (cont'd)

21. Apply liquid gasket, P/N 08717-0004, 08718-0001, 08718-0003, or 08718-0009, evenly to the oil pan mating surface of the chain case. Install the component within 5 minutes of applying the liquid gasket (see step 17 on page 6-18).

    NOTE:
    - If you apply liquid gasket P/N 08718-0012, the component must be installed within 4 minutes.
    - If too much time has passed after applying the liquid gasket, remove the old liquid gasket and residue, then reapply new liquid gasket.

22. Install the new O-ring, side engine mount bracket, and mounting bolts on the chain case. Set the edge of the chain case to the edge of the oil pan, then install the chain case on the engine block (see step 18 on page 6-19). Wipe off the excess liquid gasket on the oil pan and chain case mating area.

    NOTE:
    - When installing the chain case, do not slide the bottom surface onto the oil pan mounting surface.
    - Wait at least 30 minutes before filling the engine with oil.
    - Do not run the engine for at least 3 hours after installing the chain case.

23. Tighten the side engine mount bracket mounting bolts (see step 19 on page 6-19).

24. Install the side engine mount bracket, then loosely tighten the new bolt and nut, and loosely tighten the bolt. Install the ground cable (see step 20 on page 6-19).

25. Remove the air cleaner housing assembly (see page 11-340).

26. Loosen the transmission mounting bolt and nuts (see step 23 on page 6-20).

27. Raise the lift to full height.

28. Loosen the lower torque rod mounting bolt (see step 25 on page 6-20).

29. Lower the vehicle on the lift.

30. Tighten the side engine mount mounting bolts and nut (see step 27 on page 6-20).

31. Tighten the transmission mounting bolt and nuts (see step 28 on page 6-20).

32. Raise the lift to full height.

33. Tighten the lower torque rod mounting bolt (see step 30 on page 6-21).

34. Lower the vehicle on the lift.

35. Install the air cleaner housing assembly (see page 11-340).

36. Install the upper torque rod, then tighten the new upper torque rod mounting bolts in the numbered sequence shown (see step 33 on page 6-21).

37. Install the VTC oil control solenoid valve (see page 11-284).

38. Connect the CKP sensor connector and VTC oil control solenoid valve connector (see step 36 on page 6-21).

39. Install the crankshaft pulley (see page 6-12).

40. Install the cylinder head cover (see page 6-30).

41. Install the drive belt (see page 4-29).

42. Do the CKP pattern clear/CKP learn procedure (see page 11-4).

Cylinder Head Cover Removal

1. Remove the intake manifold cover.

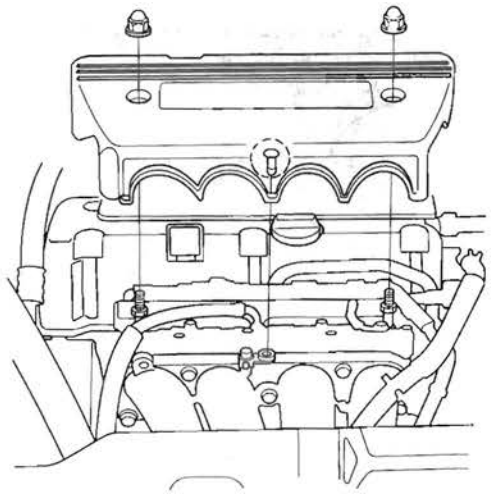

2. Remove the four ignition coils (see page 4-19).

3. Disconnect the evaporative emission (EVAP) canister purge valve connector.

4. Remove the dipstick (A), the breather hose (B), and power steering (P/S) hose clamp (C).

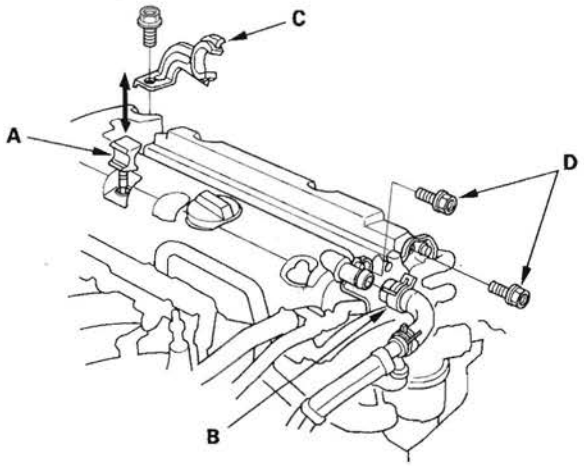

5. Remove two bolts (D) securing the EVAP canister purge valve bracket.

6. Remove the cylinder head cover.

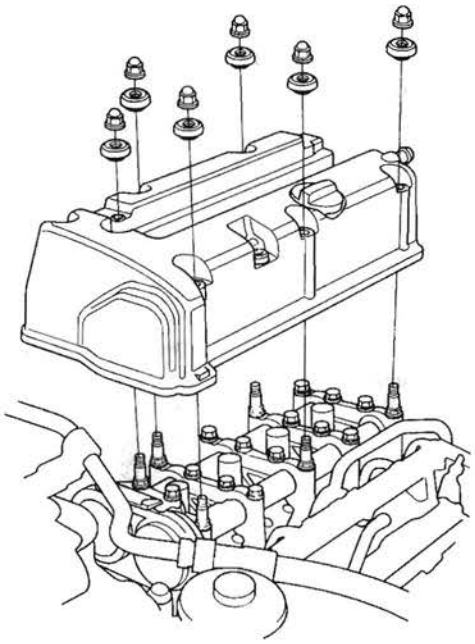

Cylinder Head Cover Installation

1. Thoroughly clean the head cover gasket and the groove.

2. Install the head cover gasket (A) in the groove of the cylinder head cover (B).

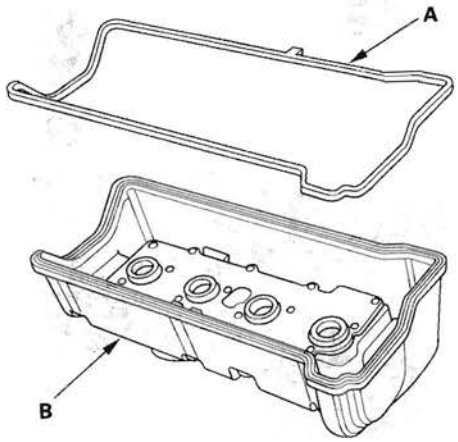

3. Check that the mating surfaces are clean and dry.

4. Apply liquid gasket, P/N 08717-0004, 08718-0001, 08718-0003, or 08718-0009, on the chain case and the No. 5 rocker shaft holder mating areas. Install the component within 5 minutes of applying the liquid gasket.

   NOTE:
   - If you apply liquid gasket P/N 08718-0012, the component must be installed within 4 minutes.
   - If too much time has passed after applying the liquid gasket, remove the old liquid gasket and residue, then reapply new liquid gasket.

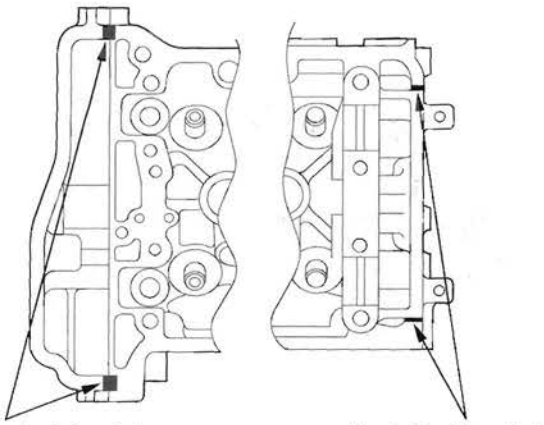

5. Set the spark plug seals (A) on the spark plug tubes. Place the cylinder head cover (B) on the cylinder head, then slide the cover slightly back and forth to seat the head cover gasket.

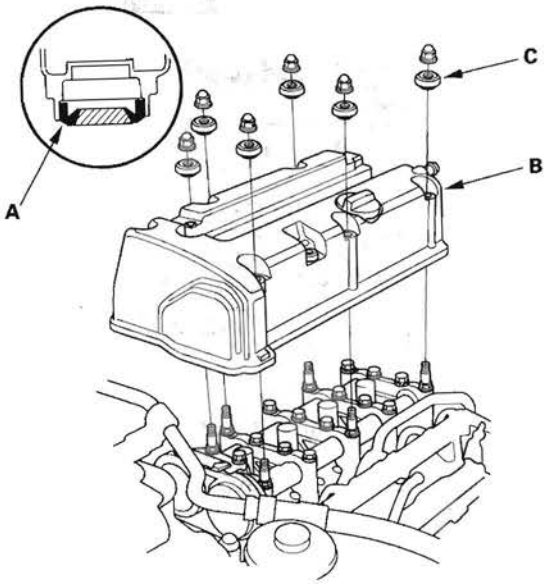

6. Inspect the cover washers (C). Replace any washer that is damaged or deteriorated.

7. Tighten the bolts in two or three steps. In the final step tighten all bolts, in sequence, to 12 N·m (1.2 kgf·m, 8.7 lbf·ft).

   NOTE:
   - Wait at least 30 minutes before filling the engine with oil.
   - Do not run the engine for at least 3 hours after installing the head cover.

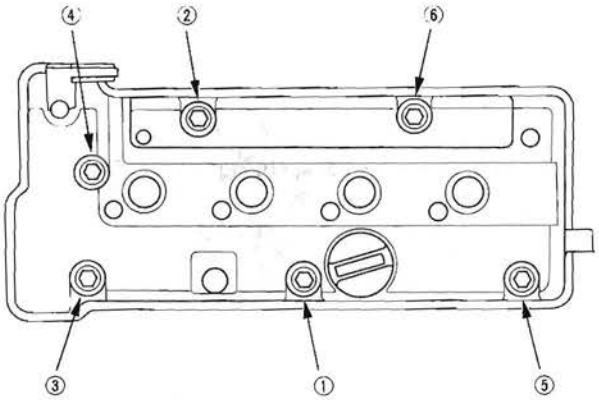

8. Install two bolts (A) securing the evaporative emission (EVAP) canister purge valve bracket.

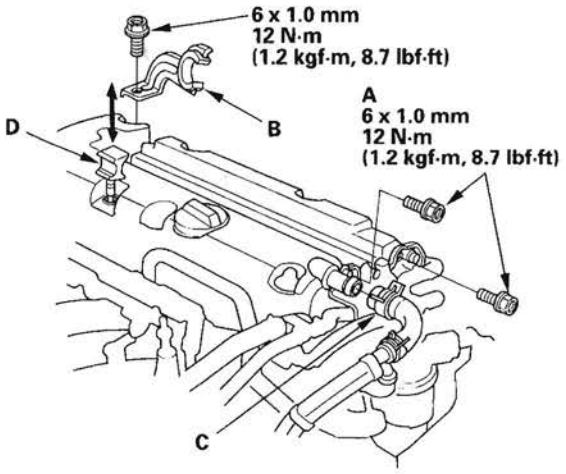

9. Install the power steering (P/S) hose clamp (B), breather hose (C), and the dipstick (D).
10. Connect the EVAP canister purge valve connector.
11. Install the four ignition coils. (see page 4-19).
12. Install the intake manifold cover.

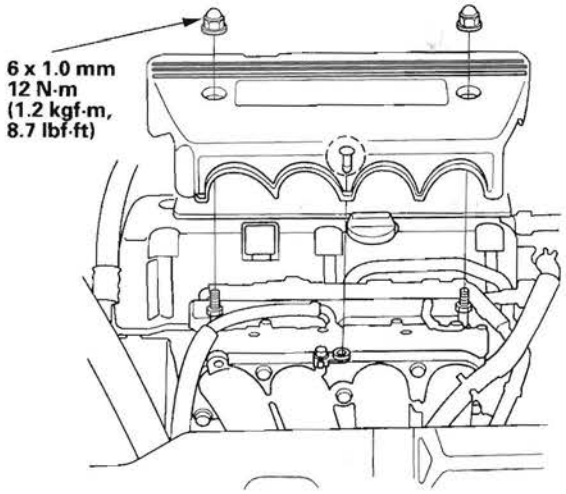

Cylinder Head Removal

NOTE:
- Use fender covers to avoid damaging painted surfaces.
- To avoid damage, unplug the wiring connectors carefully while holding the connector portion.
- To avoid damaging the cylinder head, wait until the engine coolant temperature drops below 100 °F (38 °C) before loosening the cylinder head bolts.
- Mark all wiring and hoses to avoid misconnection. Also, be sure that they do not contact other wiring or hoses, or interfere with other parts.

1. Relieve fuel pressure (see page 11-317).
2. Drain the engine coolant (see page 10-6).
3. Remove the air cleaner housing (see page 11-340).
4. Remove the drive belt (see page 4-29).
5. Remove the intake manifold (see page 9-2).
6. Remove the exhaust manifold (see page 9-8).
7. Remove the evaporative emission (EVAP) canister hose (A) and brake booster vacuum hose (B).

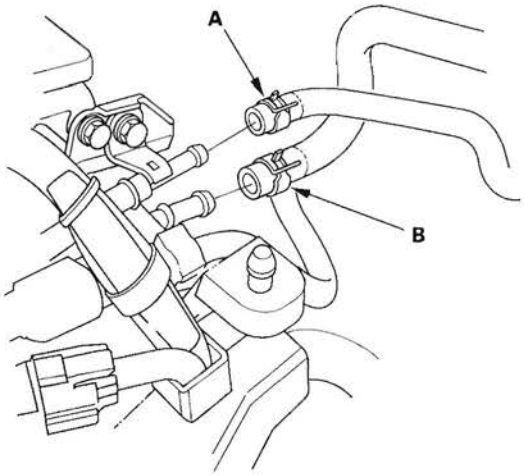

(cont'd)

Cylinder Head Removal (cont'd)

8. Remove the quick-connect fitting cover (A), then disconnect the fuel feed hose (see page 11-324).

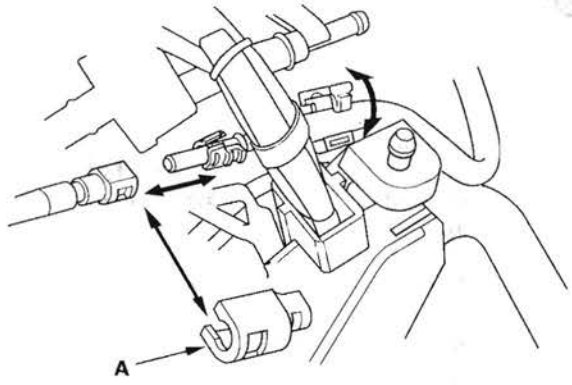

9. Remove the positive crankcase ventilation (PCV) hose (A) and ground cable (B).

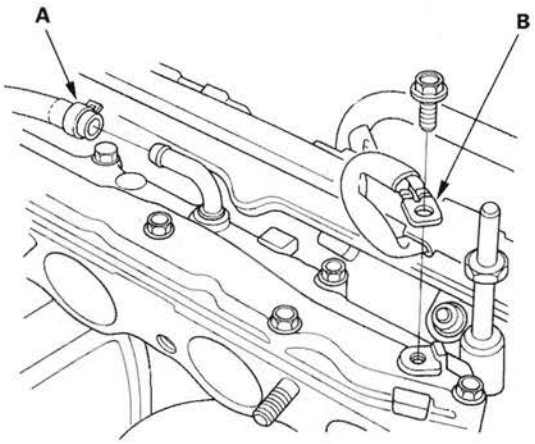

10. Remove the harness holder (A) from the bracket, then remove the harness holder bracket (B).

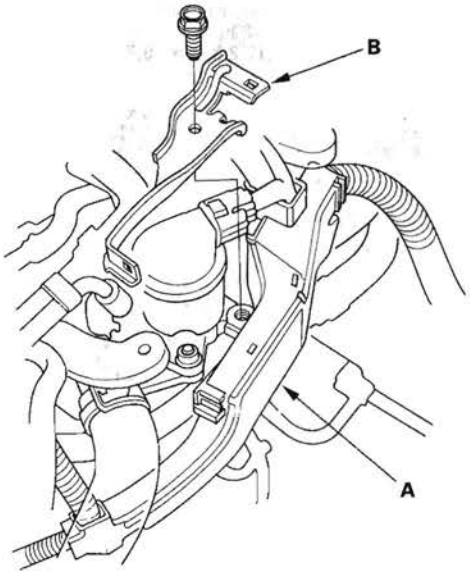

11. Remove the upper radiator hose (A) and heater hoses (B).

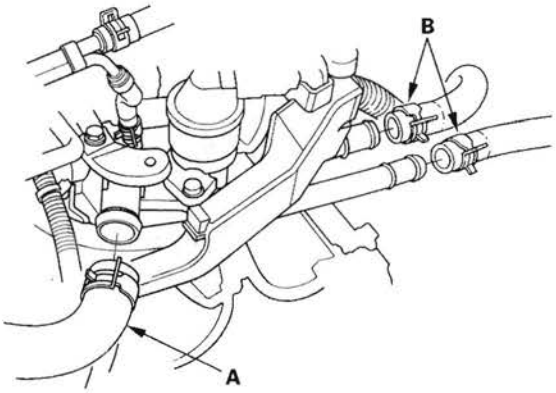

12. Remove the bolt (A) securing the connecting pipe.

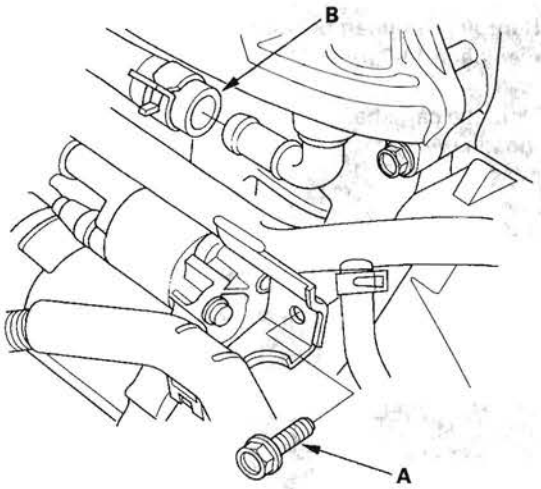

13. Remove the water bypass hose (B).

14. Remove the engine wire harness connectors and wire harness clamps from the cylinder head.

- Four fuel injector connectors
- Engine coolant temperature (ECT) sensor 1 connector
- Camshaft position (CMP) sensor A (Intake) connector
- Camshaft position (CMP) sensor B (Exhaust) connector
- Rocker arm oil control solenoid connector
- Rocker arm oil pressure switch connector
- EVAP canister purge valve connector
- Exhaust gas recirculation (EGR) valve connector

15. Remove the cam chain (see page 6-13).

16. Remove the rocker arm assembly (see page 6-37).

17. Remove the cylinder head bolts. To prevent warpage, unscrew the bolts in sequence 1/3 turn at a time; repeat the sequence until all bolts are loosened.

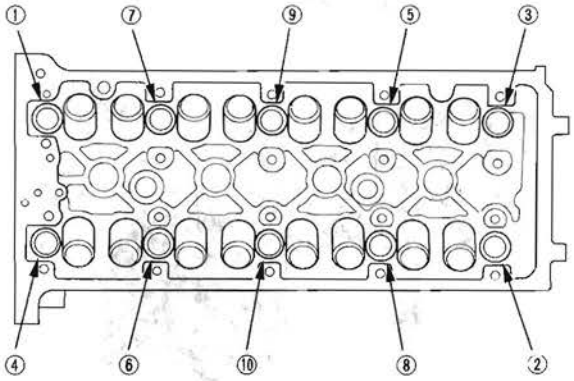

18. Remove the cylinder head.

CMP Pulse Plate A Replacement

1. Remove the cylinder head cover (see page 6-29).
2. Remove camshaft position (CMP) sensor A (see page 11-285).
3. Hold the camshaft with an open-end wrench, then loosen the bolt.

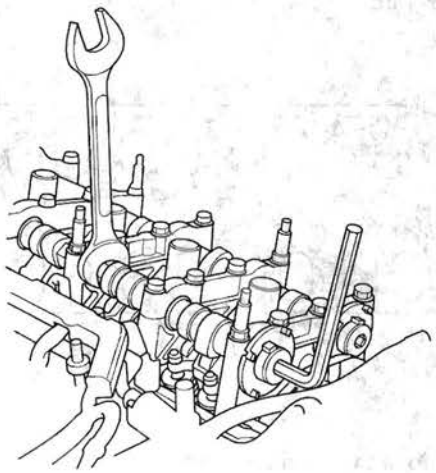

4. Remove CMP pulse plate A.

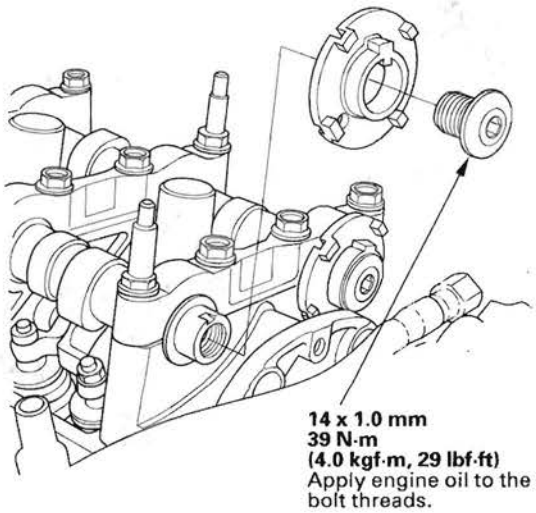

5. Install CMP pulse plate A in the reverse order of removal.

CMP Pulse Plate B Replacement

1. Remove the cylinder head cover (see page 6-29).
2. Remove camshaft position (CMP) sensor B (see page 11-215).
3. Hold the camshaft with an open-end wrench, then loosen the bolt.

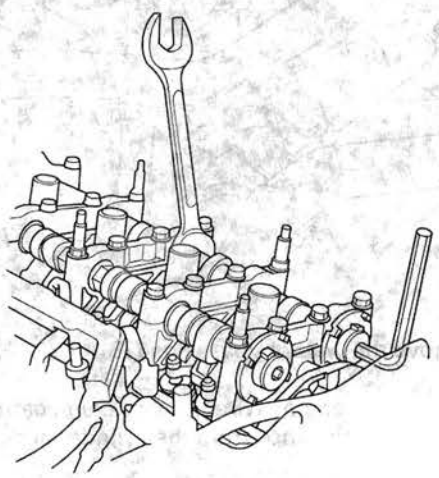

4. Remove CMP pulse plate B.

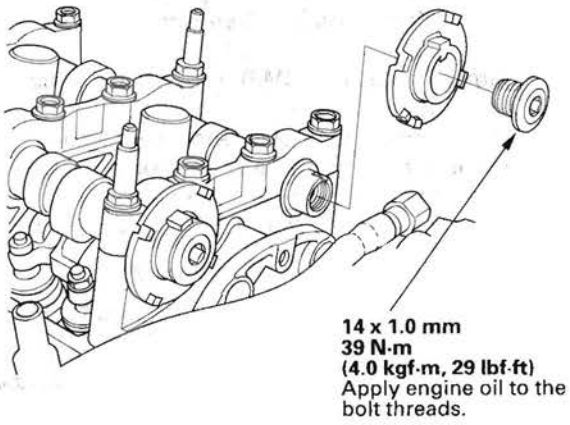

5. Install CMP pulse plate B in the reverse order of removal.

VTC Actuator, Exhaust Camshaft Sprocket Replacement

Removal

1. Remove the cam chain (see page 6-13).

2. Hold the camshaft with an open-end wrench, then loosen the variable valve timing control (VTC) actuator mounting bolt and exhaust camshaft sprocket mounting bolt.

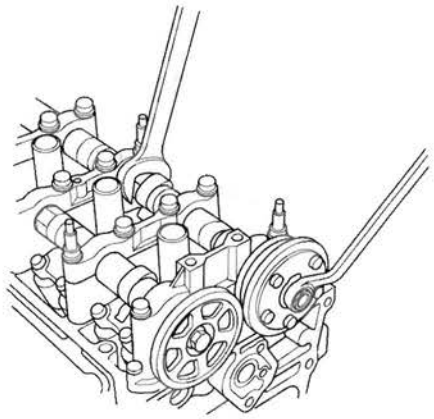

3. If the VTC actuator will be reused, do these steps.

   1. Remove the intake camshaft, and seal the advance holes and retard holes in the No. 1 camshaft journal with tape (see step 6 on page 6-8).
   2. Punch a hole in the tape over one of the advance holes (see step 7 on page 6-8).
   3. Apply air to the advance hole to release the lock (see step 8 on page 6-9).
   4. Remove the tape and adhesive residue from the camshaft journal.

4. Remove the VTC actuator and exhaust camshaft sprocket.

Installation

1. Install the VTC actuator and exhaust camshaft sprocket.

   NOTE: Install the VTC actuator to unlock position.

2. Apply engine oil to the threads of the VTC actuator mounting bolt and exhaust camshaft mounting bolt, then install them.

3. Hold the camshaft with an open-end wrench, then tighten the bolts.

   Specified Torque
   VTC Actuator Mounting Bolt:
   12 x 1.25 mm
   113 N·m (11.5 kgf·m, 83 lbf·ft)
   Exhaust Camshaft Sprocket Mounting Bolt:
   10 x 1.25 mm
   72 N·m (7.3 kgf·m, 53 lbf·ft)

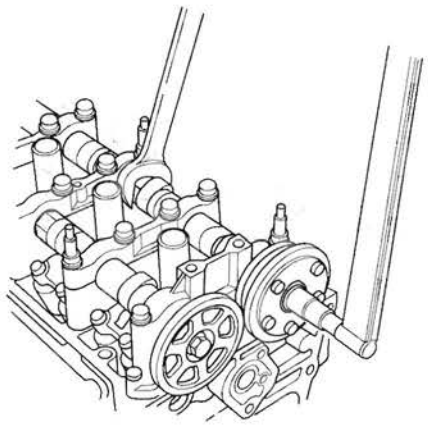

4. Hold the camshaft, and turn the VTC actuator clockwise until you hear it click. Make sure to lock the VTC actuator by turning it.

5. Install the cam chain (see page 6-16).

Cylinder Head Inspection for Warpage

1. Remove the cylinder head (see page 6-31).
2. Inspect the camshaft (see page 6-40).
3. Check the cylinder head for warpage. Measure along the edges, and three ways across the center.
   - If warpage is less than 0.05 mm (0.002 in.) cylinder head resurfacing is not required.
   - If warpage is between 0.05 mm (0.002 in.) and 0.2 mm (0.008 in.), resurface the cylinder head.
   - Maximum resurface limit is 0.2 mm (0.008 in.) based on a height of 104 mm (4.09 in.).

Cylinder Head Height
Standard (New): 103.95—104.05 mm (4.093—4.096 in.)

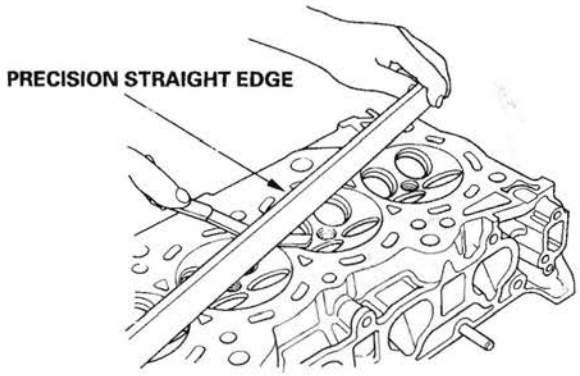

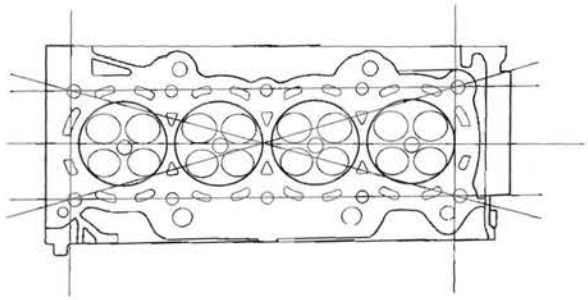

Rocker Arm Assembly Removal

1. Remove the cam chain (see page 6-13).

2. Loosen the rocker arm adjusting screws (A).

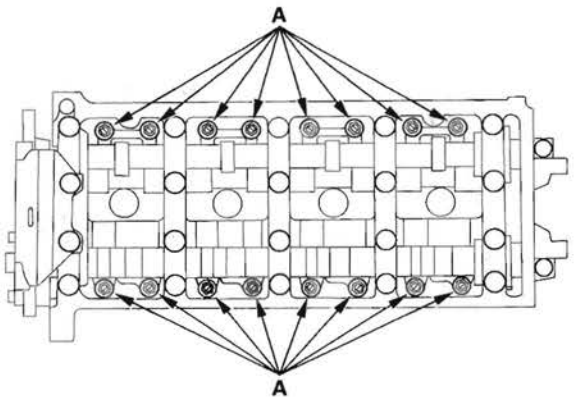

3. Remove the camshaft holder bolts. To prevent damaging the camshafts, unscrew the bolts, in sequence, two turns at a time.

   NOTE: Bolt ① is not on all engines.

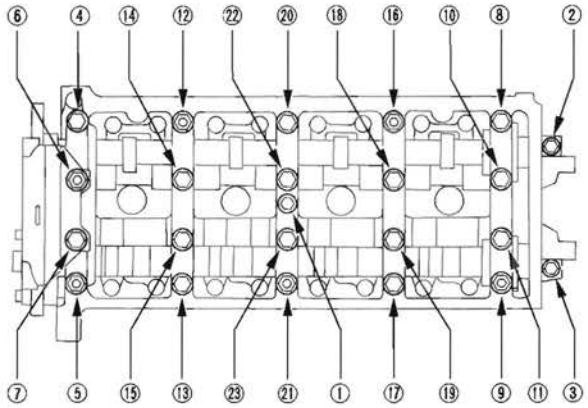

4. Remove cam chain guide B, camshaft holders, and camshafts.

5. Insert the bolts (A) into the rocker shaft holder, then remove the rocker arm assembly (B).

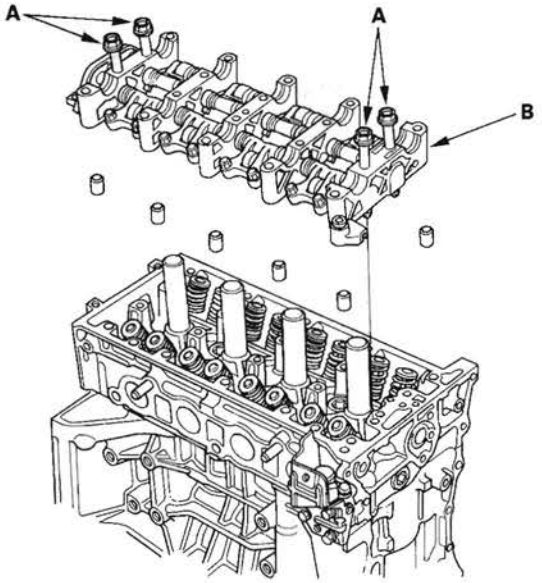

Rocker Arm and Shaft Disassembly/Reassembly

NOTE:
- Identify each part as it is removed so that each item can be reinstalled.
- Inspect the rocker arm shaft and rocker arms (see page 6-39).
- If reused, the rocker arms must be installed in the same positions.
- When removing, or installing the rocker arm assembly, do not remove the camshaft holder bolts. The bolts will keep the holders and rocker arms on the shaft.
- Prior to reassembling, clean all the parts in solvent, dry them, and apply lubricant to any contact points.
- Bundle the intake rocker arms with rubber bands to keep them together as a set.
- When replacing the intake rocker arm assembly, remove the fastening hardware from the new intake rocker arm assembly.

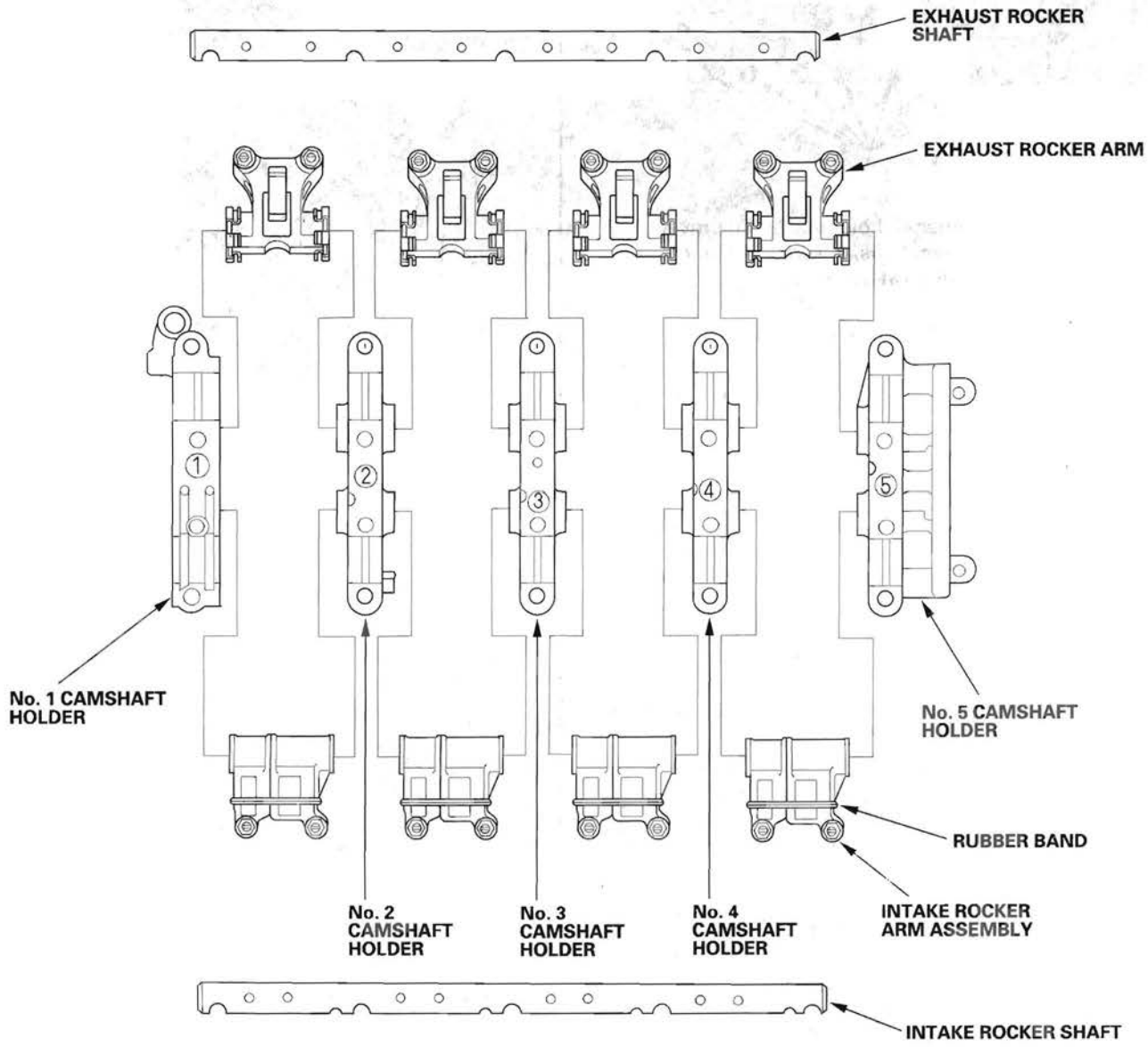

Rocker Arm and Shaft Inspection

1. Remove the rocker arm assembly (see page 6-37).
2. Disassemble the rocker arm assembly (see page 6-38).
3. Measure the diameter of the shaft at the first rocker location.

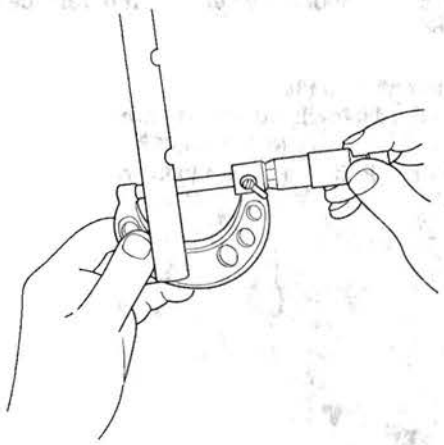

4. Zero the gauge (A) to the shaft diameter.

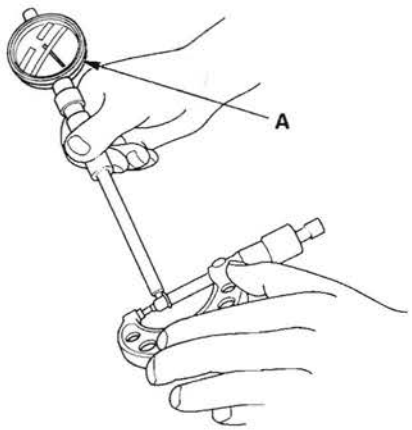

5. Measure the inside diameter of the rocker arm, and check it for an out-of-round condition.

Rocker Arm-to-Shaft Clearance
Standard (New):

Intake:	**0.025—0.052 mm (0.0010—0.0020 in.)**
Exhaust:	**0.018—0.056 mm (0.0007—0.0022 in.)**
Service Limit:	**0.08 mm (0.003 in.)**

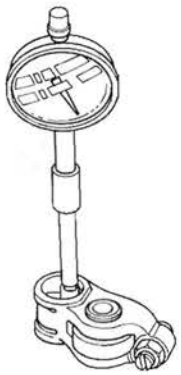

6. Repeat for all rocker arms and both shafts. If the clearance is beyond the service limit, replace the rocker shaft and all out of service limit rocker arms. If any VTEC rocker arm needs replacement, replace the rocker arms (primary and secondary), as a set.
7. Inspect the rocker arm pistons (A). Push on each piston manually. If it does not move smoothly, replace the rocker arm set.

   NOTE: Apply oil to the pistons when reassembling.

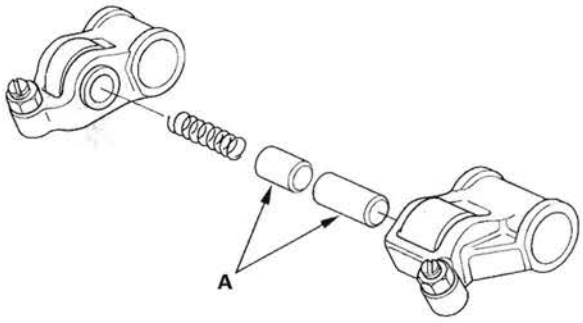

8. Install the rocker arm assembly (see page 6-49).

Camshaft Inspection

NOTE: Do not rotate the camshaft during inspection.

1. Remove the rocker arm assembly (see page 6-37).

2. Put the rocker shaft holders, camshaft, and camshaft holders on the cylinder head, then tighten the bolts, in sequence, to the specified torque.

   NOTE: If the engine does not have bolt ㉑, skip it and continue the torque sequence.

   Specified Torque
   8 x 1.25 mm
   22 N·m (2.2 kgf·m, 16 lbf·ft)
   6 x 1.0 mm
   12 N·m (1.2 kgf·m, 8.7 lbf·ft)
   6 x 1.0 mm Bolts: ㉑, ㉒, ㉓

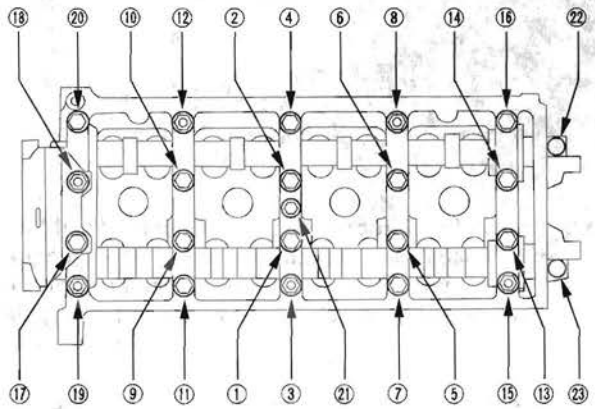

3. Seat the camshaft by pushing it away from the camshaft pulley end of the cylinder head.

4. Zero the dial indicator against the end of the camshaft, then push the camshaft back and forth, and read the end play. If the end play is beyond the service limit, replace the cylinder head and recheck. If it is still beyond the service limit, replace the camshaft.

   Camshaft End Play
   Standard (New): 0.05—0.20 mm (0.002—0.008 in.)
   Service Limit: 0.4 mm (0.02 in.)

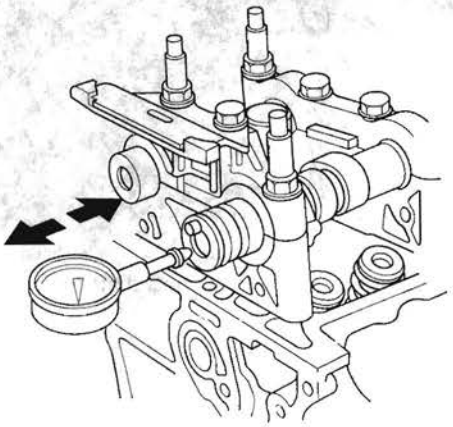

5. Unscrew the camshaft holder bolts two turns at a time, in a crisscross pattern. Then remove the camshaft holders from the cylinder head.

6. Lift the camshafts out of the cylinder head, wipe them clean, then inspect the lift ramps. Replace the camshaft if any lobes are pitted, scored, or excessively worn.

7. Clean the camshaft journal surfaces in the cylinder head, then set the camshafts back in place. Place a plastigage strip across each journal.

8. Install the camshaft holders, then tighten the bolts to the specified torque as shown in step 2.

9. Remove the camshaft holders. Measure the widest portion of plastigage on each journal.

   - If the camshaft-to-holder clearance is within limits, go to step 11.
   - If the camshaft-to-holder clearance is beyond the service limit, and the camshaft has been replaced, replace the cylinder head.
   - If the camshaft-to-holder clearance is beyond the service limit, and the camshaft has not been replaced, go to step 10.

Camshaft-to-Holder Oil Clearance
Standard (New):

No. 1 Journal:	**0.030—0.069 mm (0.001—0.003 in.)**
No. 2, 3, 4, 5 Journals:	**0.060—0.099 mm (0.002—0.004 in.)**
Service Limit:	**0.15 mm (0.006 in.)**

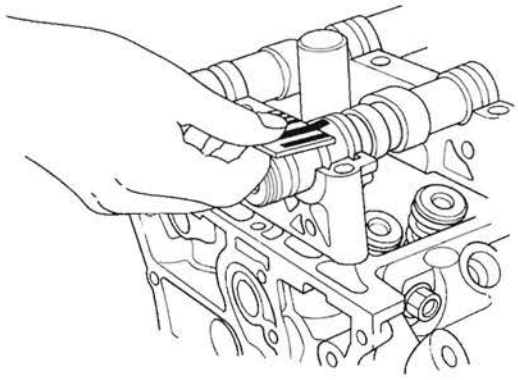

10. Check the total runout with the camshaft supported on V-blocks.

    - If the total runout of the camshaft is within the service limit, replace the cylinder head.
    - If the total runout is beyond the service limit, replace the camshaft, and recheck the camshaft-to-holder oil clearance. If the oil clearance is still beyond the service limit, replace the cylinder head.

Camshaft Total Runout
Standard (New): 0.03 mm (0.001 in.) max.
Service Limit: 0.04 mm (0.002 in.)

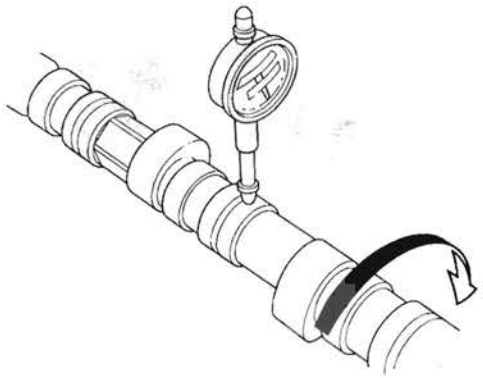

11. Measure cam lobe height.

Cam Lobe Height Standard (New):

	INTAKE	EXHAUST
PRI	34.263 mm (1.3489 in.)	34.092 mm (1.3422 in.)
SEC	29.638 mm (1.1668 in.)	

PRI: Primary SEC: Secondary C/C: Cam Chain

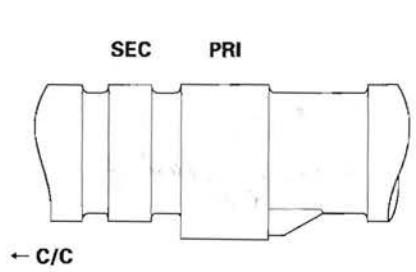

Valve, Spring, and Valve Seal Removal

Special Tools Required
Valve spring compressor attachment 07757-PJ1010A

Identify the valves and valve springs as they are removed so that each item can be reinstalled in its original position.

1. Remove the cylinder head (see page 6-31).

2. Using an appropriate-sized socket (A) and plastic mallet (B), lightly tap the valve retainer to loosen the valve cotters.

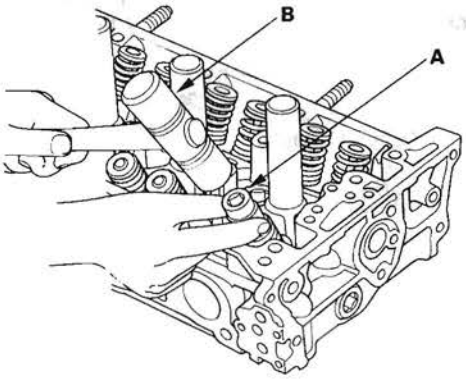

3. Install the valve spring compressor. Compress the spring, and remove the valve cotters.

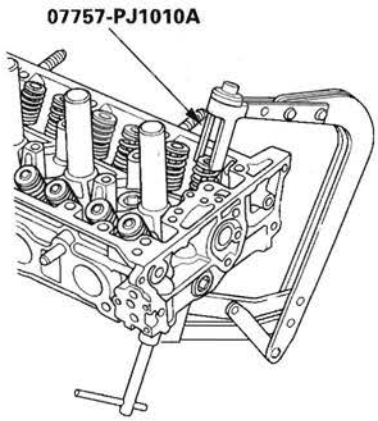

4. Remove the special tool, then remove the valve retainer and valve spring.

5. Install the valve guide seal remover.

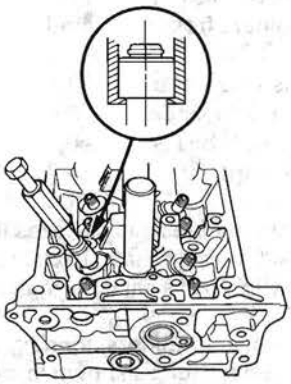

6. Remove the valve seal.

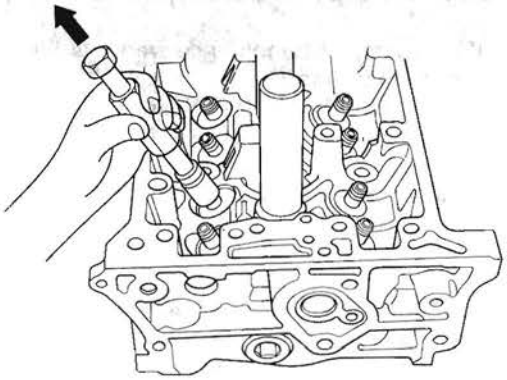

Valve Inspection

1. Remove the valves (see page 6-42).
2. Measure the valve in these areas.

Intake Valve Dimensions
A Standard (New): 34.85—35.15 mm (1.372—1.384 in.)
B Standard (New): 108.7—109.5 mm (4.280—4.311 in.)
C Standard (New): 5.475—5.485 mm (0.2156—0.2159 in.)
C Service Limit: 5.445 mm (0.214 in.)

Exhaust Valve Dimensions
A Standard (New): 29.85—30.15 mm (1.175—1.187 in.)
B Standard (New): 108.3—109.1 mm (4.264—4.295 in.)
C Standard (New): 5.450—5.460 mm (0.2146—0.2150 in.)
C Service Limit: 5.42 mm (0.213 in.)

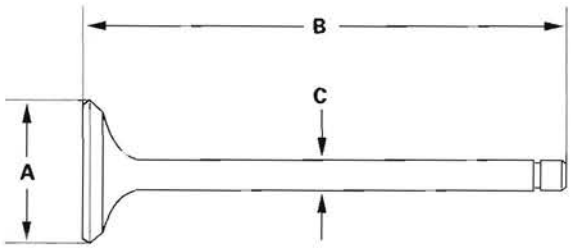

Valve Stem-to-Guide Clearance Inspection

1. Remove the valves (see page 6-42).
2. Slide the valve out of its guide about 10 mm (0.39 in.), then measure the guide-to-stem clearance with a dial indicator while rocking the stem in the direction of normal thrust (wobble method).
   - If the measurement exceeds the service limit, recheck it using a new valve.
   - If the measurement is now within the service limit, reassemble using a new valve.
   - If the measurement with a new valve still exceeds the service limit, go to step 3.

Intake Valve Stem-to-Guide Clearance
Standard (New): 0.06—0.11 mm (0.002—0.004 in.)
Service Limit: 0.16 mm (0.006 in.)

Exhaust Valve Stem-to-Guide Clearance
Standard (New): 0.11—0.16 mm (0.004—0.006 in.)
Service Limit: 0.22 mm (0.009 in.)



3. Subtract the O.D. of the valve stem, measured with a micrometer, from the I.D. of the valve guide, measured with an inside micrometer or ball gauge. Take the measurements in three places along the valve stem and three places inside the valve guide. The difference between the largest guide measurement and the smallest stem measurement should not exceed the service limit.

Intake Valve Stem-to-Guide Clearance
Standard (New): 0.030—0.055 mm (0.0012—0.0022 in.)
Service Limit: 0.08 mm (0.003 in.)

Exhaust Valve Stem-to-Guide Clearance
Standard (New): 0.055—0.080 mm (0.0022—0.0031 in.)
Service Limit: 0.11 mm (0.004 in.)

Valve Guide Replacement

Special Tools Required
- Valve guide driver, 5.5 mm 07742-0010100
- Valve guide reamer, 5.5 mm 07HAH-PJ7A100

1. Inspect the valve stem-to-guide clearance (see page 6-43).

2. As illustrated, use a commercially available air-impact valve guide driver (A) modified to fit the diameter of the valve guides. In most cases, the same procedure can be done using the special tool and a conventional hammer.

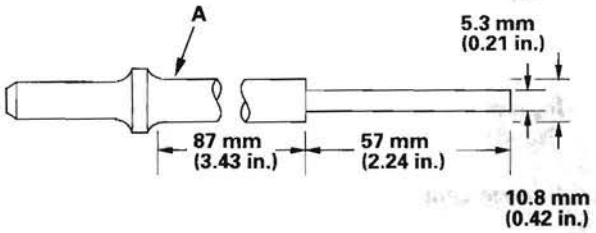

3. Select the proper replacement guides, and chill them in the freezer section of a refrigerator for about an hour.

4. Use a hot plate or oven to evenly heat the cylinder head to 300 °F (150 °C). Monitor the temperature with a cooking thermometer. Do not get the head hotter than 300 °F (150 °C); excessive heat may loosen the valve seats.

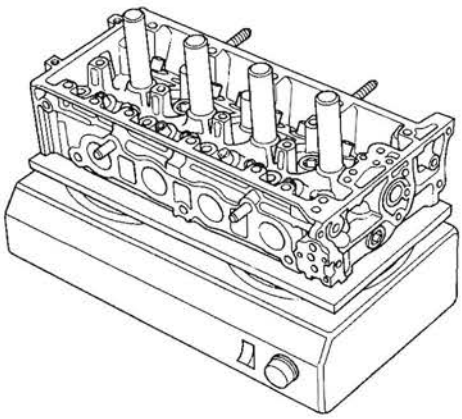

5. Working from the camshaft side, use the driver and an air hammer to drive the guide about 2 mm (0.1 in.) towards the combustion chamber. This will knock off some of the carbon and make removal easier. Hold the air hammer directly in line with the valve guide to prevent damaging the driver.

6. Turn the head over, and drive the guide out toward the camshaft side of the head.

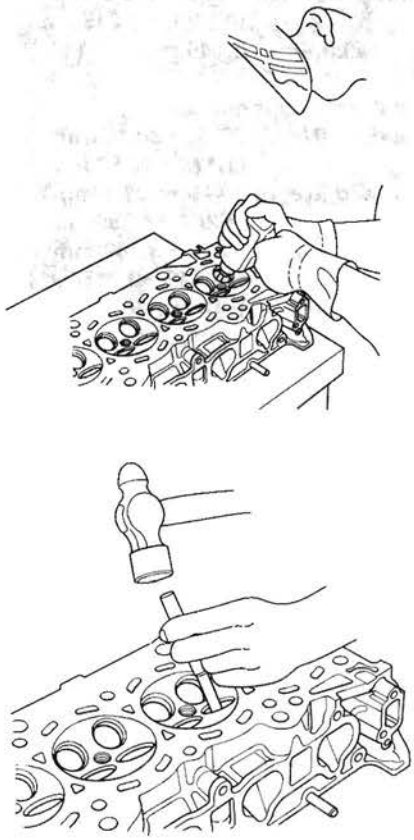

7. If a valve guide won't move, drill it out with a 8 mm (5/16 in.) bit, then try again. Drill guides only in extreme cases; you could damage the cylinder head if the guide breaks.

8. Take out the new guide(s) from the freezer, one at a time, as you need them.

9. Apply a thin coat of clean engine oil to the outside of the new valve guide. Install the guide from the camshaft side of the head; use the 5.5 valve guide driver to drive the guide in to the specified installed height (A) of the guide (B). If you have all 16 guides to do, you may have to reheat the head.

Valve Guide Installed Height
Intake: 15.2—16.2 mm (0.598—0.638 in.)
Exhaust: 15.5—16.5 mm (0.610—0.650 in.)

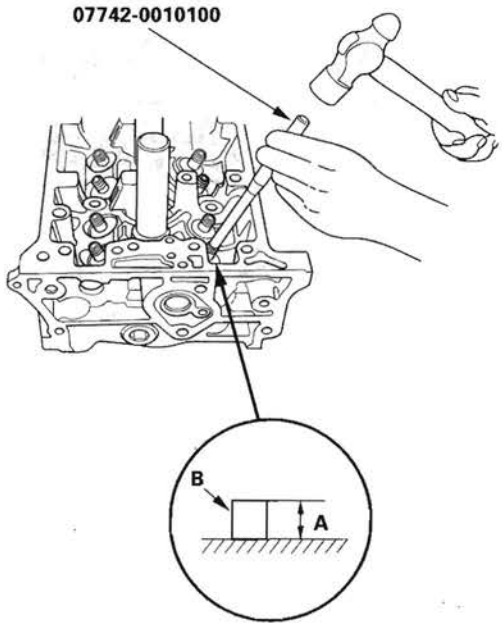

10. Coat both reamer and the valve guide with cutting oil.

11. Rotate the reamer clockwise to the full length of the valve guide bore.

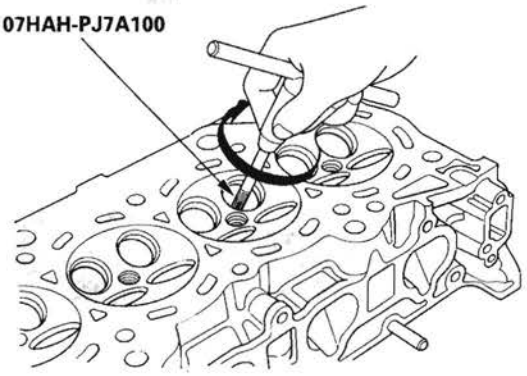

12. Continue to rotate the reamer clockwise while removing it from the bore.

13. Thoroughly wash the guide in detergent and water to remove any cutting residue.

14. Check the clearances with a valve (see page 6-43). Verify that a valve slides into the intake and exhaust valve guides without getting stuck.

Valve Seat Reconditioning

1. Inspect the valve stem-to-guide clearance (see page 6-43). If the valve guides are worn, replace them (see page 6-44) before cutting the valve seats.

2. Renew the valve seats in the cylinder head using a valve seat cutter.

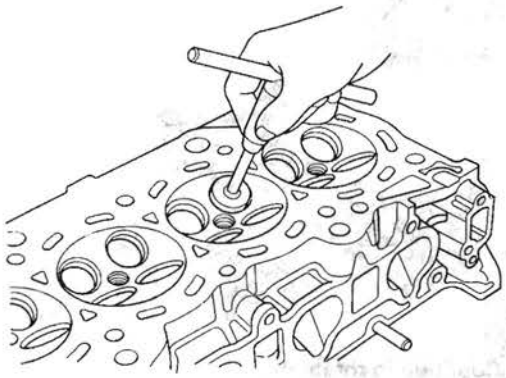

3. Carefully cut a 45 ° seat, removing only enough material to ensure a smooth and concentric seat.

4. Bevel the upper and lower edges at the angles shown in the illustration.
   Check the width of the seat and adjust accordingly.

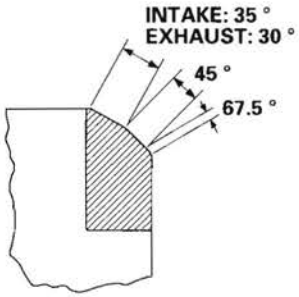

5. Make one more very light pass with the 45 ° cutter to remove any possible burrs caused by the other cutters.

   Valve Seat Width
   Standard (New): 1.25—1.55 mm (0.049—0.061 in.)
   Service Limit: 2.00 mm (0.079 in.)

6. After resurfacing the seat, inspect for even valve seating. Apply Prussian Blue compound (A) to the valve face. Insert the valve in its original location in the head, then lift it and snap it closed against the seat several times.

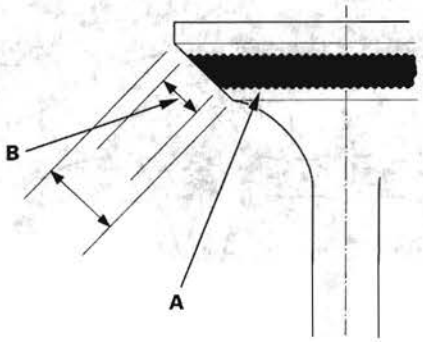

7. The actual valve seating surface (B), as shown by the blue compound, should be centered on the seat.

   - If it is too high (closer to the valve stem), you must make a second cut with the 67.5 ° cutter to move it down, then one more cut with the 45 ° cutter to restore seat width.
   - If it is too low (close to the valve edge), you must make a second cut with the 35 ° cutter (intake side) or the 30 ° cutter (exhaust side) to move it up, then make one more cut with the 45 ° cutter to restore seat width.

   NOTE: The final cut should always be made with the 45 ° cutter.

8. Insert the intake and exhaust valves in the head, and measure valve stem installed height (A).

Intake Valve Stem Installed Height
Standard (New): 44.0—44.5 mm (1.73—1.75 in.)
Service Limit: 44.7 mm (1.76 in.)

Exhaust Valve Stem Installed Height
Standard (New): 44.1—44.6 mm (1.74—1.76 in.)
Service Limit: 44.8 mm (1.76 in.)

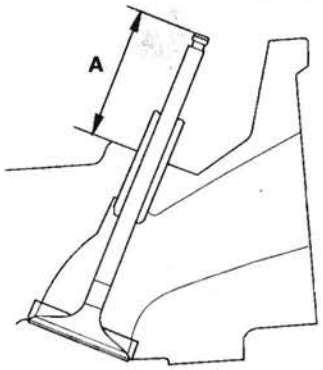

9. If valve stem installed height is beyond the service limit, replace the valve and recheck. If it is still beyond the service limit, replace the cylinder head; the valve seat in the head is too deep.

Valve, Spring, and Valve Seal Installation

Special Tools Required
- Stem seal driver 07PAD-0010000
- Valve spring compressor attachment 07757-PJ1010A

1. Coat the valve stems with engine oil. Install the valves in the valve guides.
2. Check that the valves move up and down smoothly.
3. Install the spring seats on the cylinder head.
4. Install the new valve seals (A) using the valve guide seal installer (B).

   NOTE: The exhaust valve seal (C) has a black spring (D), and the intake valve seal (E) has a white spring (F). They are not interchangeable.

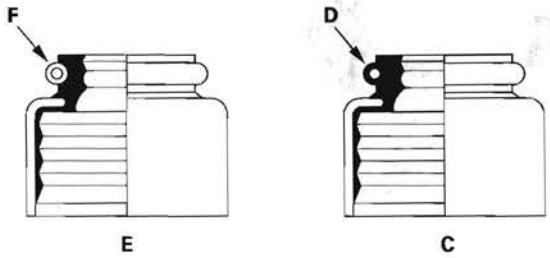

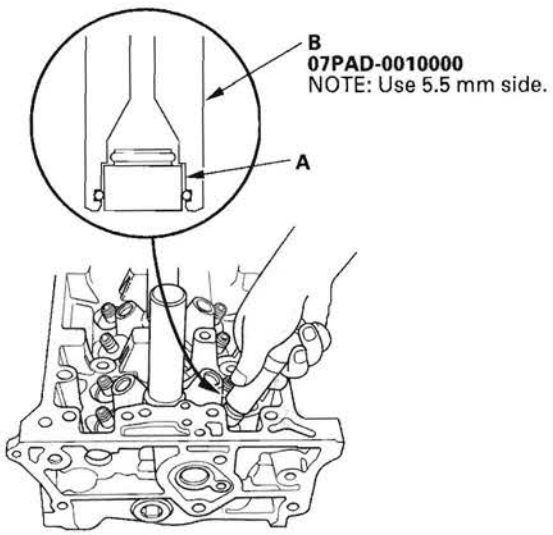

5. Install the valve spring and valve retainer. Place the end of the valve spring with the closely wound coils toward the cylinder head.
6. Install the valve spring compressor. Compress the spring, and install the valve cotters.

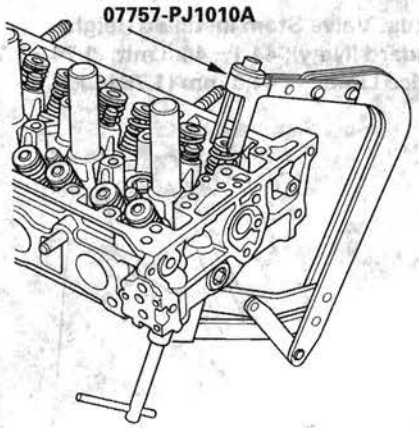

7. Remove the valve spring compressor.
8. Lightly tap the end of each valve stem two or three times with a plastic mallet (A) to ensure proper seating of the valve and valve keepers. Tap the valve stem only along its axis so you do not bend the stem.

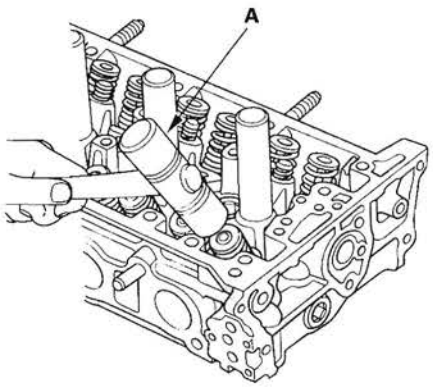

Rocker Arm Assembly Installation

1. Reassemble the rocker arm assembly (see page 6-38).

2. Clean and dry the No. 5 rocker shaft holder mating surface.

3. Apply liquid gasket, P/N 08717-0004, 08718-0001, 08718-0003, or 08718-0009, evenly to the cylinder head mating surface of the No. 5 rocker shaft holder. Install the component within 5 minutes of applying the liquid gasket.

   NOTE:
   - If you apply liquid gasket P/N 08718-0012, the component must be installed within 4 minutes.
   - If too much time has passed after applying the liquid gasket, remove the old liquid gasket and residue, then reapply new liquid gasket.

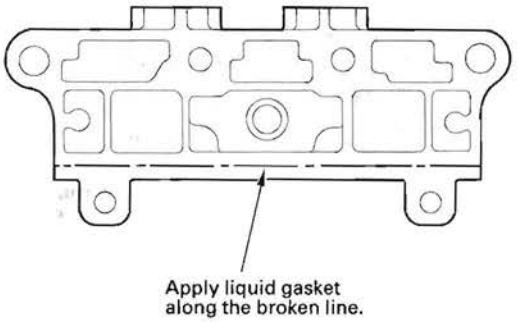

4. Insert the bolts (A) into the rocker shaft holder, then install the rocker arm assembly (B) on the cylinder head.

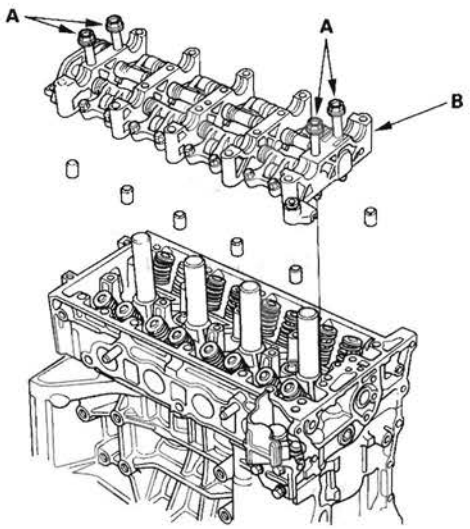

5. Remove the bolts from the rocker shaft holder.

6. Make sure the punch marks on the variable valve timing control (VTC) actuator and exhaust camshaft sprocket are facing up, then set the camshafts (A) in the holder.

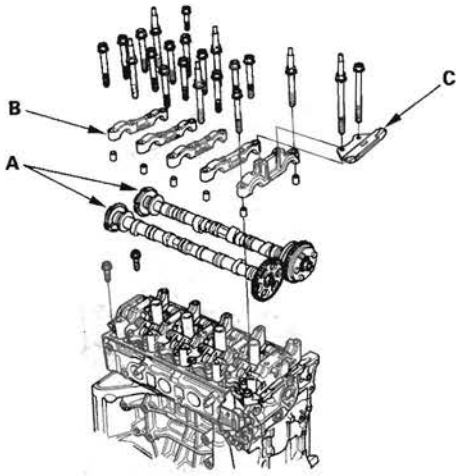

7. Set the camshaft holders (B) and cam chain guide B (C) in place.

8. Tighten the bolts to the specified torque.

   NOTE: If the engine does not have bolt ㉑, skip it and continue the torque sequence.

   Specified Torque
   8 x 1.25 mm
   22 N·m (2.2 kgf·m, 16 lbf·ft)
   6 x 1.0 mm
   12 N·m (1.2 kgf·m, 8.7 lbf·ft)
   6 x 1.0 mm Bolts: ㉑, ㉒, ㉓

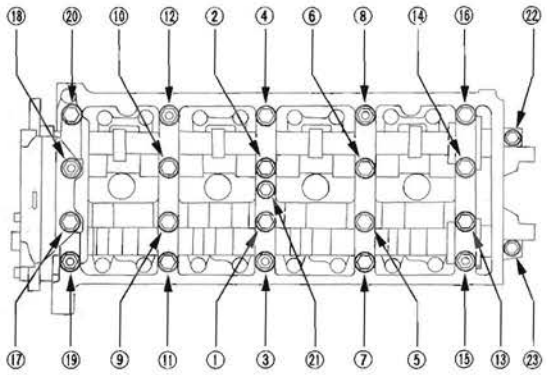

9. Install the cam chain (see page 6-16), and adjust the valve clearance (see page 6-9).

Cylinder Head Installation

1. Install a new coolant separator in the engine block whenever the engine block is replaced.

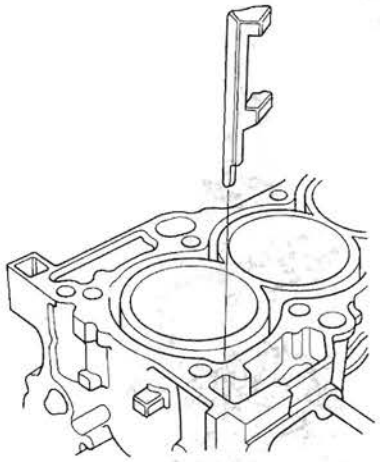

2. Clean the cylinder head and block surface.

3. Install the new cylinder head gasket (A) and dowel pins (B) on the engine block. Always use a new cylinder head gasket.

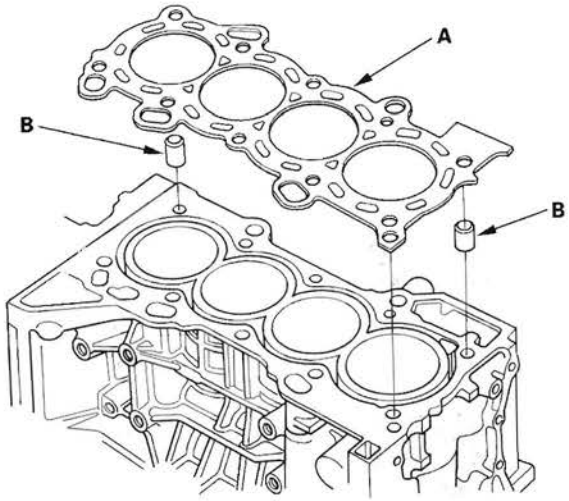

4. Set the crankshaft to top dead center (TDC). Align the TDC mark (A) on the crankshaft sprocket with the pointer (B) on the engine block.

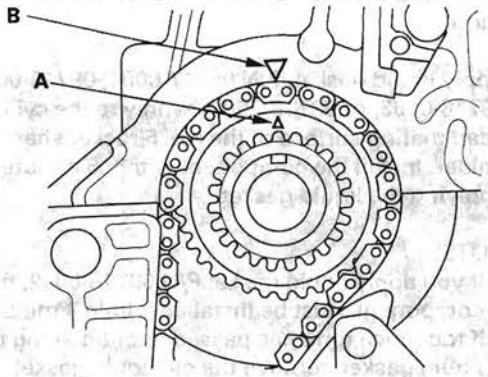

5. Install the cylinder head on the block.

6. Measure the diameter of each cylinder head bolt at point A and point B.

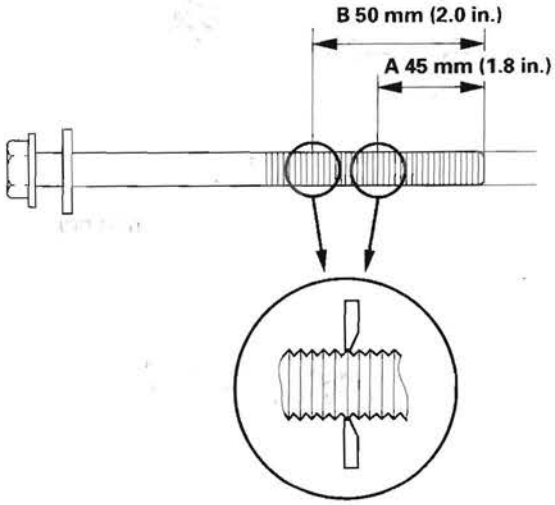

7. If either diameter is less than 10.6 mm (0.42 in.), replace the cylinder head bolt.

8. Apply engine oil to the threads and under the bolt heads of all cylinder head bolts.

9. Tighten the cylinder head bolts in sequence to 39 N·m (4.0 kgf·m, 29 lbf·ft). Use a beam-type torque wrench. When using a preset-type torque wrench, be sure to tighten slowly and do not overtighten. If a bolt makes any noise while you are torquing it, loosen the bolt and retighten it from the first step.

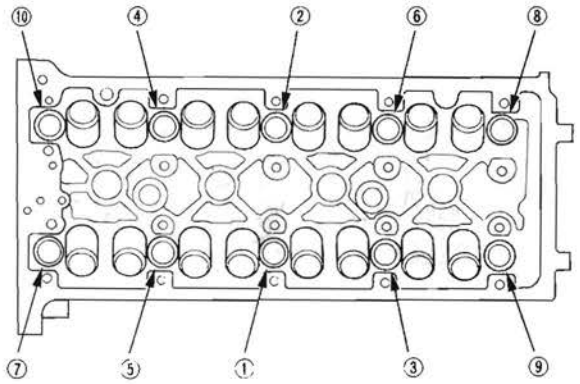

10. After torquing, tighten all cylinder head bolts in two steps (90 ° per step). If you are using a new cylinder head bolt, tighten the bolt an extra 90 °.

    NOTE: Remove the cylinder head bolt if you tightened it beyond the specified angle, and go back to step 6 of the procedure. Do not loosen it back to the specified angle.

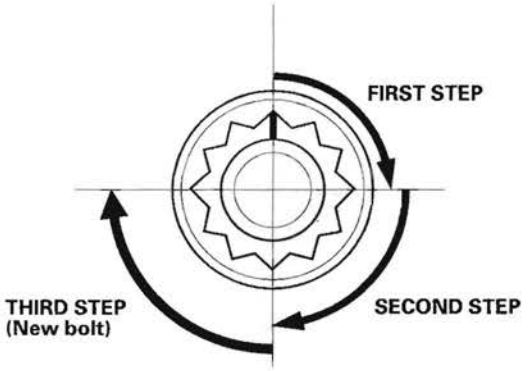

11. Install the rocker arm assembly (see page 6-49).

12. Install the cam chain (see page 6-16).

13. Connect the engine wire harness connectors, and install the wire harness clamps to the cylinder head.

    - Four fuel injector connectors
    - Engine coolant temperature (ECT) sensor 1 connector
    - Camshaft position (CMP) sensor A (Intake) connector
    - Camshaft position (CMP) sensor B (Exhaust) connector
    - Rocker arm oil control solenoid connector
    - Rocker arm oil pressure switch connector
    - EVAP canister purge valve connector
    - Exhaust gas recirculation (EGR) valve connector

14. Install the bolt (A) securing the connecting pipe.

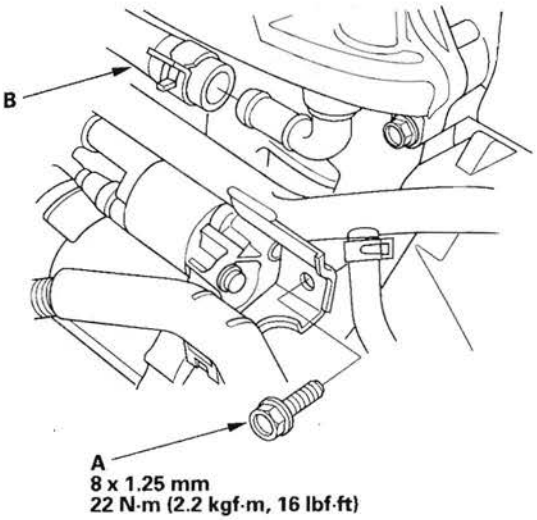

15. Install the water bypass hose (B).

(cont'd)

Cylinder Head Installation (cont'd)

16. Install the upper radiator hose (A) and heater hoses (B).

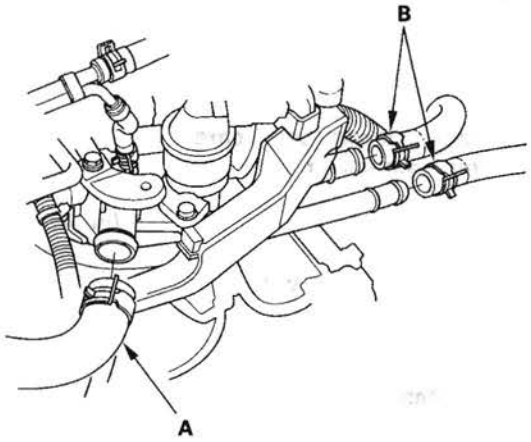

17. Install the harness holder bracket (A), then install the harness holder (B).

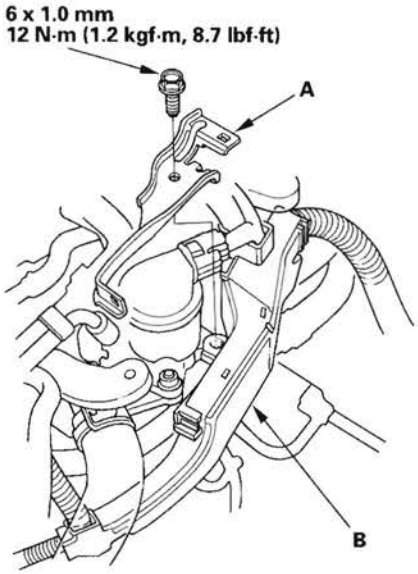

18. Install the positive crankcase ventilation (PCV) hose (A) and ground cable (B).

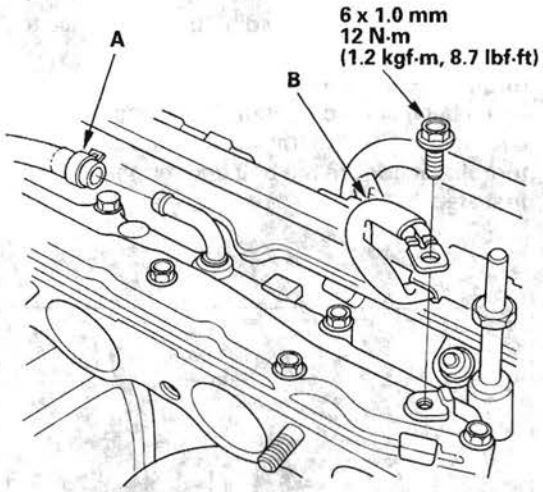

19. Connect the fuel feed hose (see page 11-326), then install the quick-connect fitting cover (A).

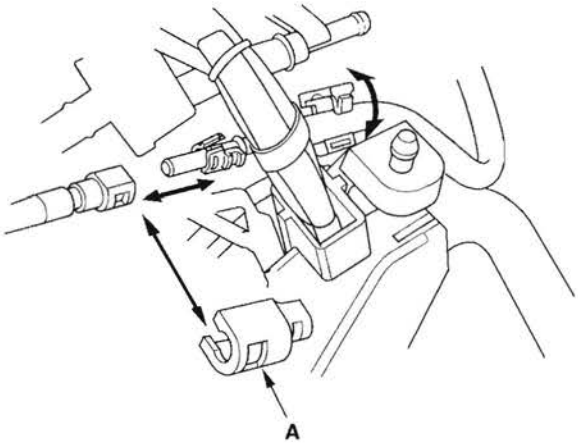

20. Install the evaporative emission (EVAP) canister hose (A) and brake booster vacuum hose (B).

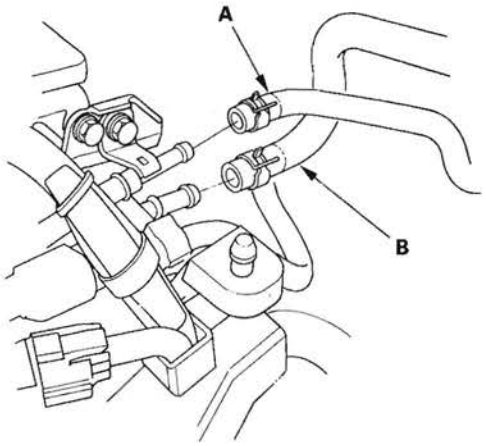

21. Install the exhaust manifold (see page 9-8).

22. Install the intake manifold (see page 9-5).

23. Install the drive belt (see page 4-29).

24. Install the air cleaner housing (see page 11-340).

25. After installation, check that all tubes, hoses and connectors are installed correctly.

26. Inspect for fuel leaks. Turn the ignition switch ON (II) (do not operate the starter) so the fuel pump runs for about 2 seconds and pressurizes the fuel line. Repeat this operation two or three times, then check for fuel leakage at any point in the fuel line.

27. Refill the radiator with engine coolant, and bleed the air from the cooling system with the heater valve open (see step 6 on page 10-6).

28. Inspect the idle speed (see page 11-303).

29. Inspect the ignition timing (see page 4-18).

Sealing Bolt Installation

NOTE: When installing the sealing bolt, always use a new washer.

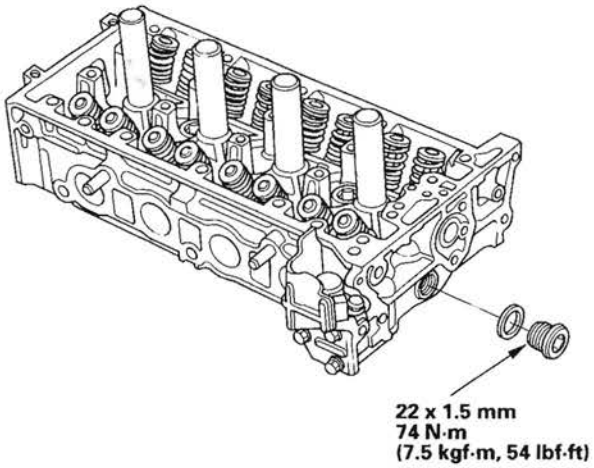

Engine Mechanical

Engine Block

Special Tools 7-2
Component Location Index 7-3
Connecting Rod and Crankshaft End Play Inspection 7-5
Crankshaft Main Bearing Replacement 7-6
Connecting Rod Bearing Replacement 7-8
Oil Pan Removal 7-11
Crankshaft and Piston Removal 7-13
Crankshaft Inspection 7-15
Block and Piston Inspection 7-16
Cylinder Bore Honing 7-18
Piston, Pin, and Connecting Rod Replacement 7-19
Piston Ring Replacement 7-22
Piston Installation 7-24
Connecting Rod Bolt Inspection 7-25
Crankshaft Installation 7-26
Oil Pan Installation 7-29
Transmission End Crankshaft Oil Seal Installation - In Car 7-31
Sealing Bolt Installation 7-32

Special Tools

Ref. No.	Tool Number	Description	Qty
①	07ZAD-PNAA100	Oil Seal Driver Attachment, 96 mm	1
②	07749-0010000	Driver	1

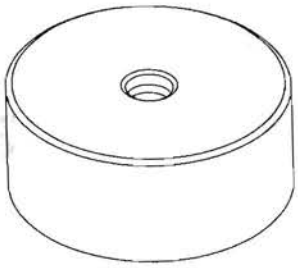

①

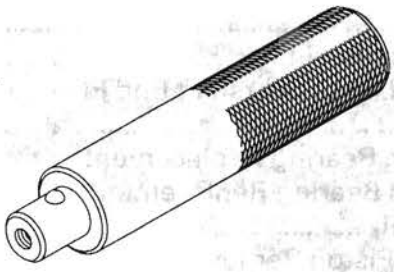

②

Component Location Index

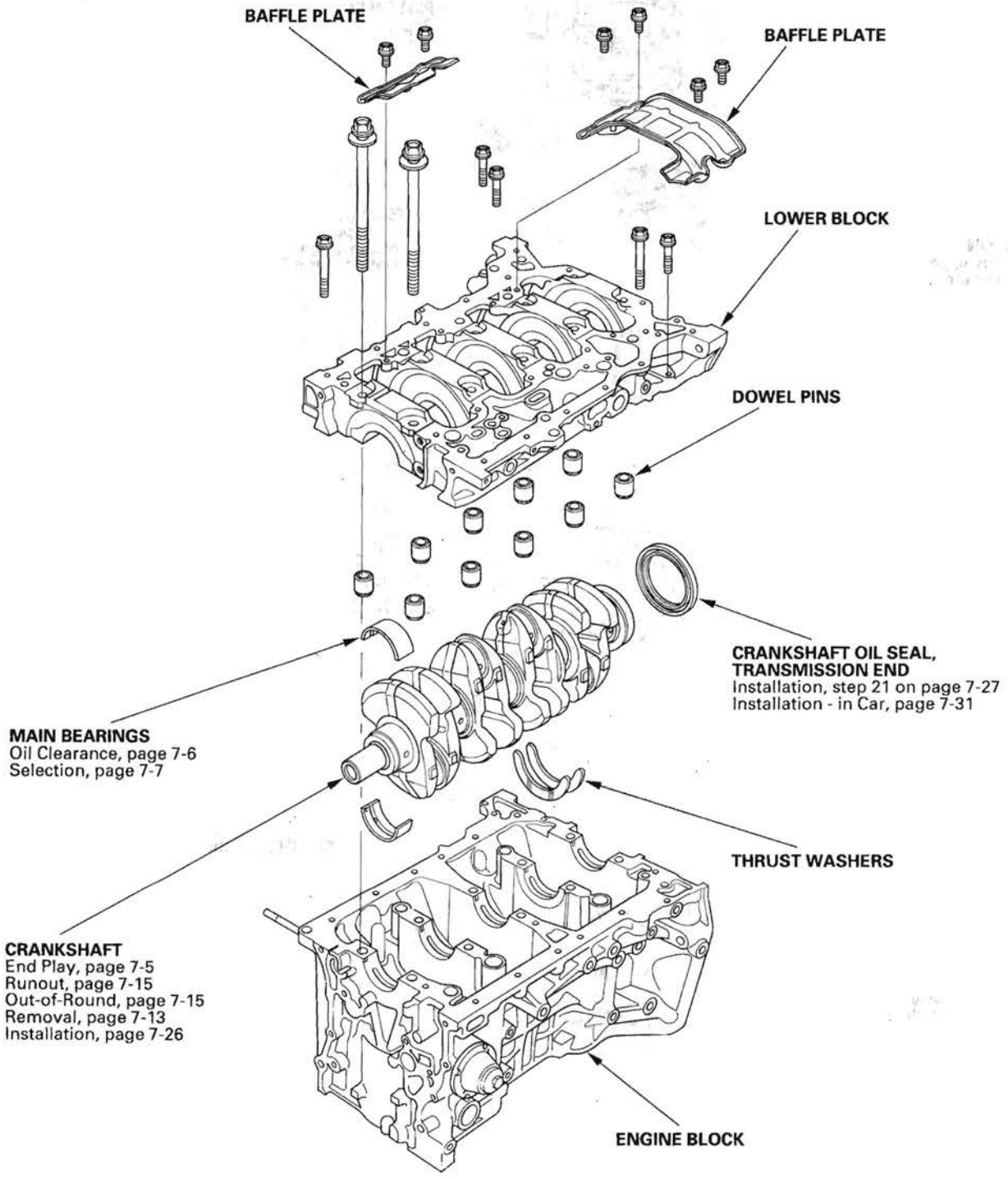

(cont'd)

Component Location Index (cont'd)

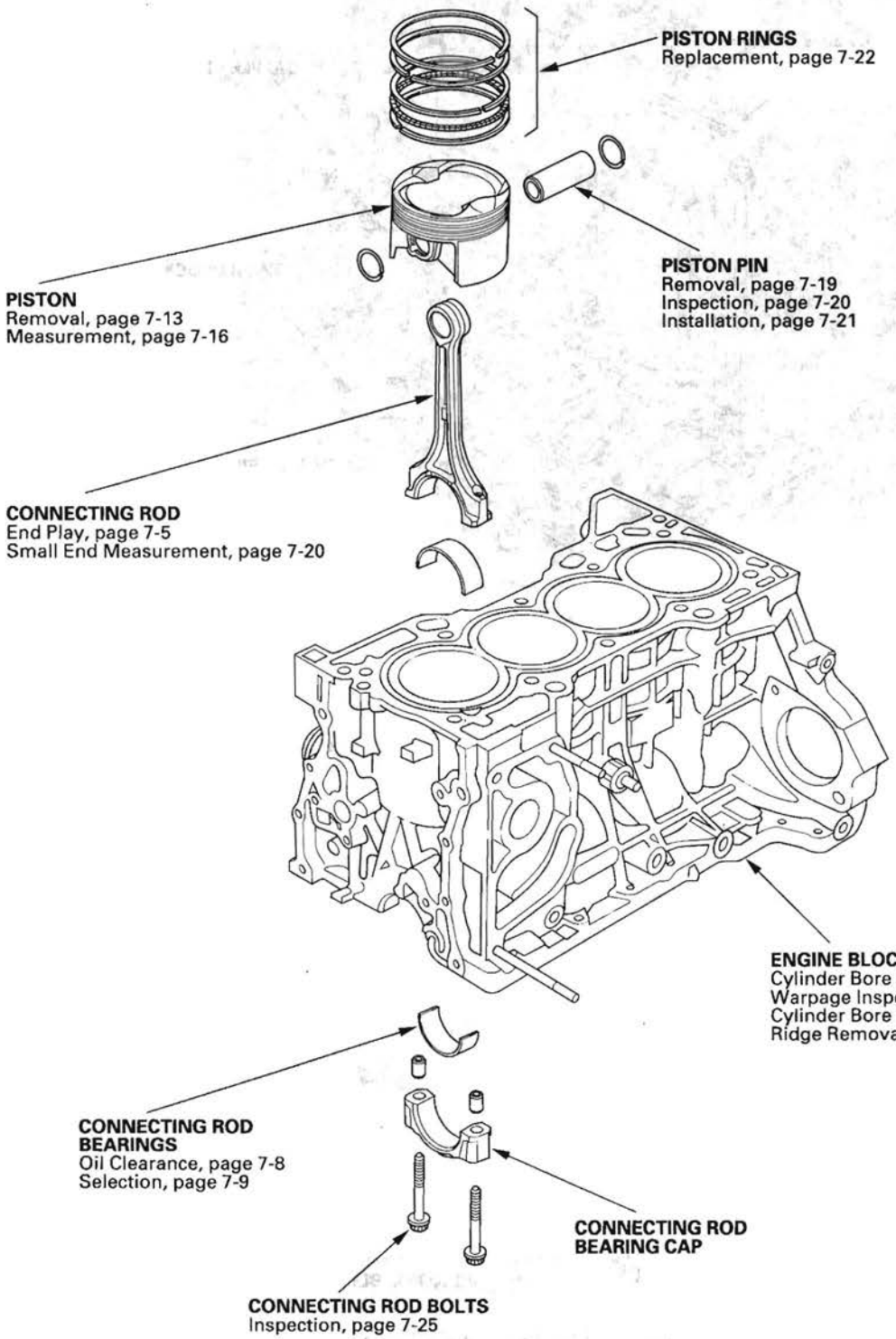

Connecting Rod and Crankshaft End Play Inspection

1. Remove the oil pump (see page 8-15).
2. Remove the baffle plates (see step 7 on page 7-13).
3. Measure the connecting rod end play with a feeler gauge between the connecting rod and crankshaft.

Connecting Rod End Play
Standard (New): 0.15—0.35 mm (0.006—0.014 in.)
Service Limit: 0.40 mm (0.016 in.)

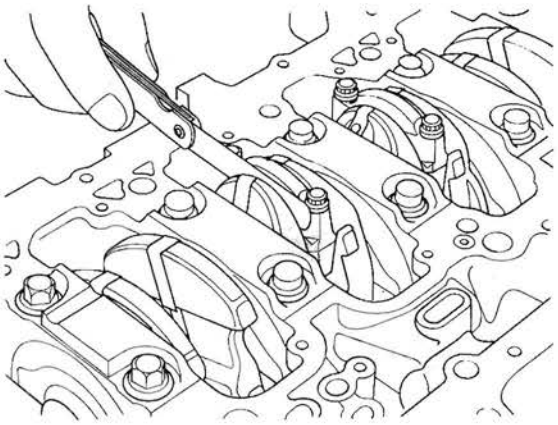

4. If the connecting rod end play is beyond service limit, install a new connecting rod, and recheck. If it is still beyond service limit; replace the crankshaft (see page 7-13).
5. Push the crankshaft firmly away from the dial indicator, and zero the dial against the end of the crankshaft. Then pull the crankshaft firmly back toward the indicator; the dial reading should not exceed the service limit.

Crankshaft End Play
Standard (New): 0.10—0.35 mm (0.004—0.014 in.)
Service Limit: 0.45 mm (0.018 in.)

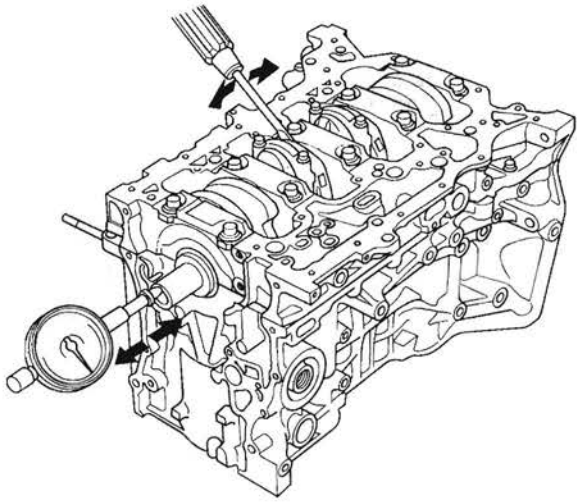

6. If the end play is beyond service limit, replace the thrust washers and recheck, if it is still beyond service limit, replace the crankshaft (see page 7-13).

Crankshaft Main Bearing Replacement

Main Bearing Clearance Inspection

1. To check main bearing-to-journal oil clearance, remove the lower block and bearing halves (see page 7-13).
2. Clean each main journal and bearing half with a clean shop towel.
3. Place one strip of plastigage across each main journal.
4. Reinstall the bearings and lower block, then torque the bolts to 29 N·m (3.0 kgf·m, 22 lbf·ft).

   NOTE: Do not rotate the crankshaft during inspection.

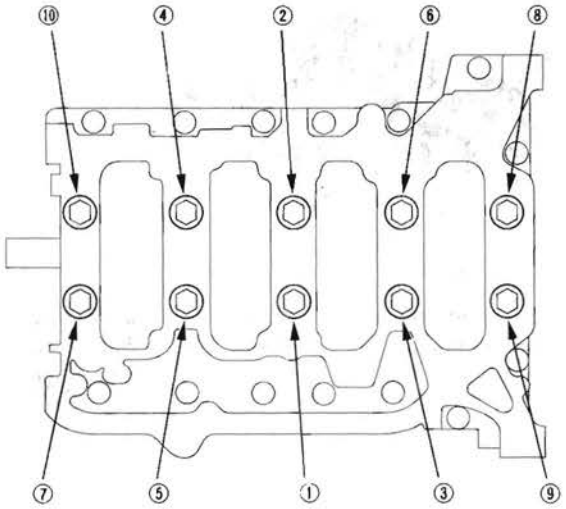

5. Tighten the bearing cap bolts an additional 56 °.
6. Remove the lower block and bearings again, and measure the widest part of the plastigage.

   Main Bearing-to-Journal Oil Clearance
   No. 1, 2, 4, 5 Journals:
   Standard (New): 0.017 — 0.041 mm (0.0007 — 0.0016 in.)
   Service Limit: 0.050 mm (0.0020 in.)
   No. 3 Journal:
   Standard (New): 0.025 — 0.049 mm (0.0010 — 0.0019 in.)
   Service Limit: 0.055 mm (0.0022 in.)

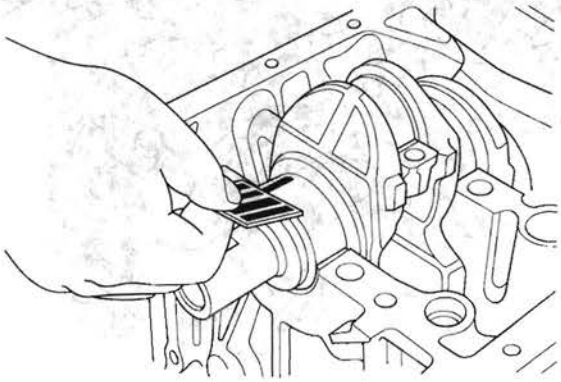

7. If the plastigage measures too wide or too narrow, remove the crankshaft, and remove the upper half of the bearing. Install a new, complete bearing with the appropriate color code(s), and recheck the clearance. Do not file, shim, or scrape the bearings or the caps to adjust clearance.
8. If the plastigage shows the clearance is still incorrect, try the next larger or smaller bearing (the color listed above or below the current one), and check again. If the proper clearance cannot be obtained by using the appropriate larger or smaller bearings, replace the crankshaft and start over.

Main Bearing Selection

Crankshaft Bore Code Location

1. Numbers, letters, or bars have been stamped on the end of the block as a code for the size of each of the five main journal bores. Write down the crank bore codes.
   If you can't read the codes because of accumulated dirt and dust, do not scrub them with a wire brush or scraper. Clean them only with solvent or detergent.

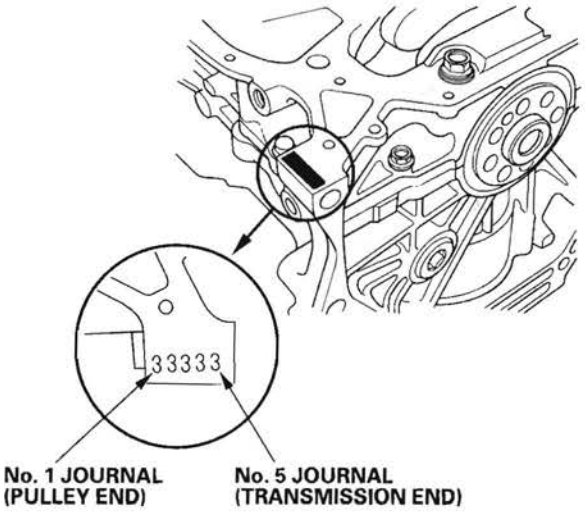

Main Journal Code Location

2. The main journal codes are stamped on the crankshaft in either location.

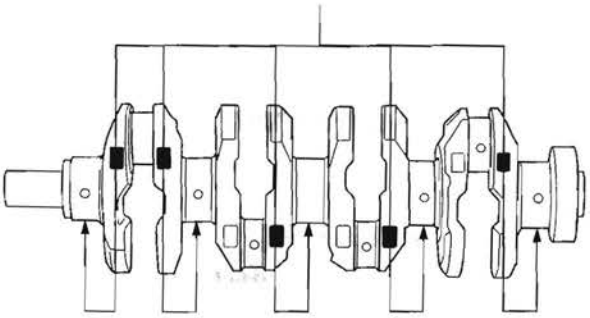

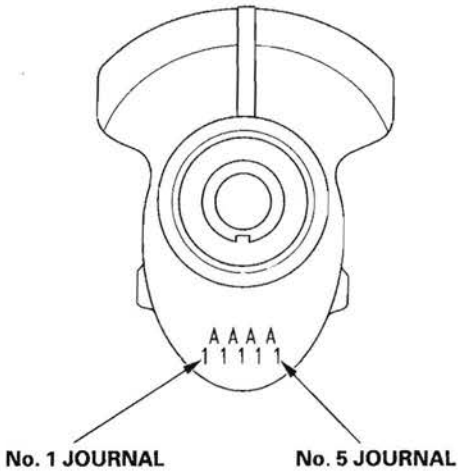

(cont'd)

Crankshaft Main Bearing Replacement (cont'd)

3. Use the crank bore codes and crank journal codes to select the appropriate replacement bearings from the following table.

NOTE:
- The color code is on the edge of the bearing.
- When using bearing halves of different colors, it does not matter which color is used in the top or bottom.

Main journal code (Smaller main journal ↓)	Crank bore code: 1 or A or I (Larger crank bore →)	2 or B or II	3 or C or III	4 or D or IIII (Smaller bearing (Thicker) →)
1	Pink	Pink/ Yellow	Yellow	Green
2	Pink/ Yellow	Yellow	Green	Green/ Brown
3	Yellow	Green	Green/ Brown	Brown
4	Green	Green/ Brown	Brown	Black
5	Green/ Brown	Brown	Black	Black/ Blue
6	Brown	Black	Black/ Blue	Blue

Smaller bearing (Thicker) ↓

Connecting Rod Bearing Replacement

Rod Bearing Clearance Inspection

1. Remove the oil pump (see page 8-15).
2. Remove the baffle plates (see step 7 on page 7-13).
3. Remove the connecting rod cap and bearing half.
4. Clean the crankshaft rod journal and bearing half with a clean shop towel.
5. Place plastigage across the rod journal.
6. Reinstall the bearing half and cap, and torque the bolts to 20 N·m (2.0 kgf·m, 14 lbf·ft) + 90 °

   NOTE: Do not rotate the crankshaft during inspection.
7. Remove the rod cap and bearing half, and measure the widest part of the plastigage.

Connecting Rod Bearing-to-Journal Oil Clearance
Standard (New): 0.020—0.050 mm (0.0008—0.0020 in.)
Service Limit: 0.060 mm (0.0024 in.)

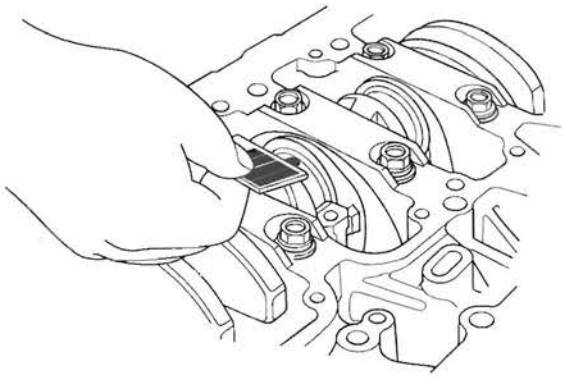

8. If the plastigage measures too wide or too narrow, remove the upper half of the bearing, install a new, complete bearing with the appropriate color code(s), and recheck the clearance. Do not file, shim, or scrape the bearings or the caps to adjust clearance.

9. If the plastigage shows the clearance is still incorrect, try the next larger or smaller bearing (the color listed above or below the current one), and check clearance again. If the proper clearance cannot be obtained by using the appropriate larger or smaller bearing, replace the crankshaft and start over.

Rod Bearing Selection

1. Inspect each connecting rod for cracks and heat damage.

Connecting Rod Big End Bore Code Locations

2. Each rod has a tolerance range from 0 to 0.024 mm (0.0009 in.), in 0.006 mm (0.0002 in.) increments, depending on the size of its big end bore. It's then stamped with a number or bar (1, 2, 3, or 4/I, II, III, or IIII) indicating the range. You may find any combination of numbers and bars in any engine. (Half the number or bar is stamped on the bearing cap, the other half is on the rod.)
If you can't read the code because of an accumulation of oil and varnish, do not scrub it with a wire brush or scraper. Clean it only with solvent or detergent.

Normal Bore Size: 51.0 mm (2.01 in.)

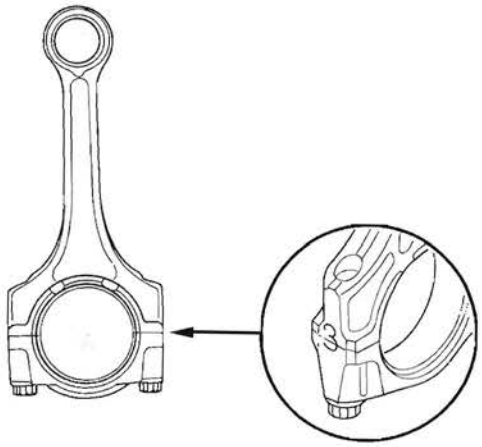

(cont'd)

Connecting Rod Bearing Replacement (cont'd)

Connecting Rod Journal Code Location

3. The connecting rod journal codes are stamped on the crankshaft in either location.

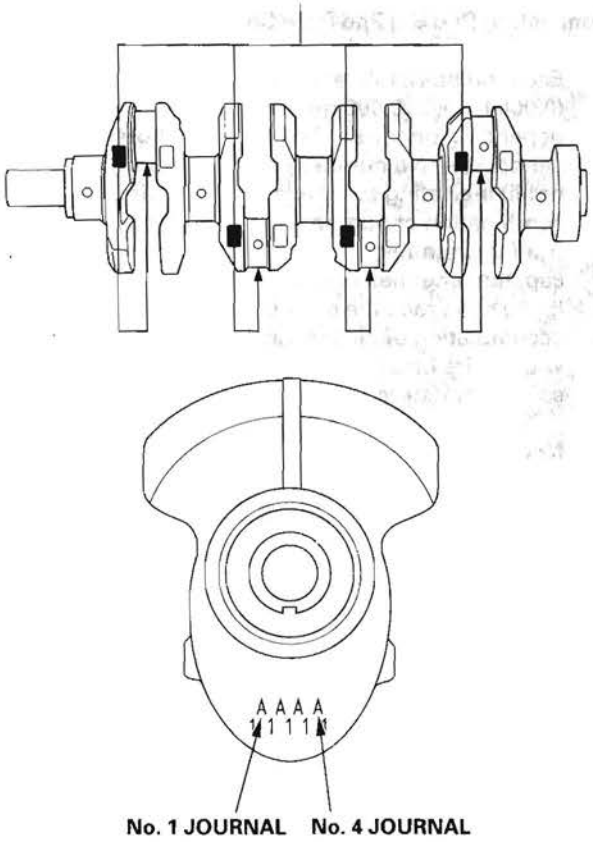

4. Use the big end bore codes and rod journal codes to select appropriate replacement bearings from the following table.

NOTE:
- The color code is on the edge of the bearing.
- When using bearing halves of different colors, it does not matter which color is used in the top or bottom.

Rod journal code (Smaller rod journal) ↓ / Big end bore code (Larger big end bore) →	1 or I	2 or II	3 or III	4 or IIII
	Smaller bearing (Thicker) →			
A	Pink	Pink/ Yellow	Yellow/ Green	Green
B	Yellow	Yellow/ Green	Green/ Brown	Brown
C	Green	Green/ Brown	Brown/ Black	Black
D	Brown	Brown/ Black	Black/ Blue	Blue

Smaller bearing (Thicker) ↓

Oil Pan Removal

1. If the engine is already out of the vehicle, go to step 20.
2. Raise the vehicle on the lift to full height.
3. Drain the engine oil (see page 8-10).
4. Remove the front wheels.
5. Remove the splash shield (see step 21 on page 5-5).
6. Disconnect the air fuel ratio (A/F) sensor connector and secondary heated oxygen sensor (secondary HO2S) connector, then remove the three way catalytic converter (TWC) (see step 25 on page 5-5).
7. Remove the shift cable (see page 14-284).
8. Separate the knuckles from the lower arms (see page 18-12).
9. Remove the propeller shaft (see page 16-40).
10. Remove a bolt securing the P/S fluid line bracket, and unclamp the P/S fluid line clamps on the front subframe (see step 31 on page 5-6).
11. Remove the bolts securing the left steering gearbox mounting bracket (see step 32 on page 5-6).
12. Remove the bolts securing the right steering gearbox mounting brackets (see step 33 on page 5-6).
13. Remove the bolt securing the automatic transmission fluid (ATF) filter.

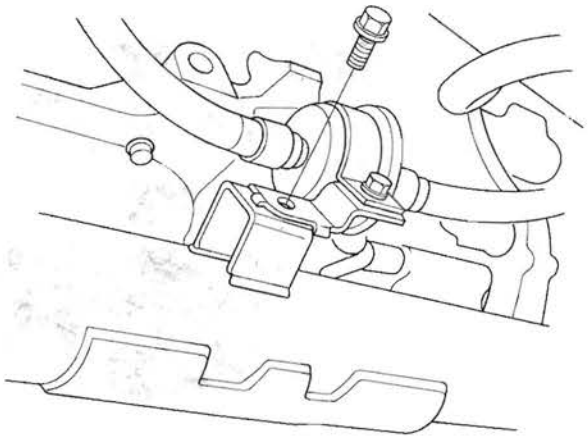

14. Remove the lower torque rod (see step 44 on page 5-8).
15. Make the appropriate reference lines at both ends of the subframe that line up with the body (see step 45 on page 5-8).
16. Remove the subframe mounting bolts on both side (see step 46 on page 5-9).
17. Attach the subframe adapter to the subframe and hang the belt of the subframe adapter over the front of the subframe, then secure the belt with its stop (see step 47 on page 5-9).
18. Raise the jack and line up the slots in the arms with the bolt holes on the corner of the jack base, then attach them with bolts securely (see step 48 on page 5-9).
19. Remove the subframe (see step 49 on page 5-9).

(cont'd)

Oil Pan Removal (cont'd)

20. Remove the lower torque rod bracket.

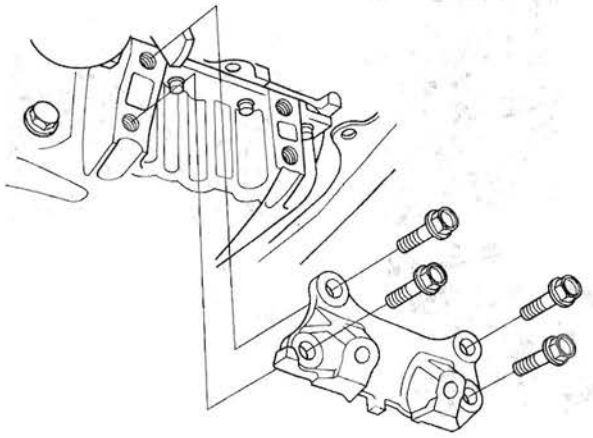

21. Remove the torque converter cover.

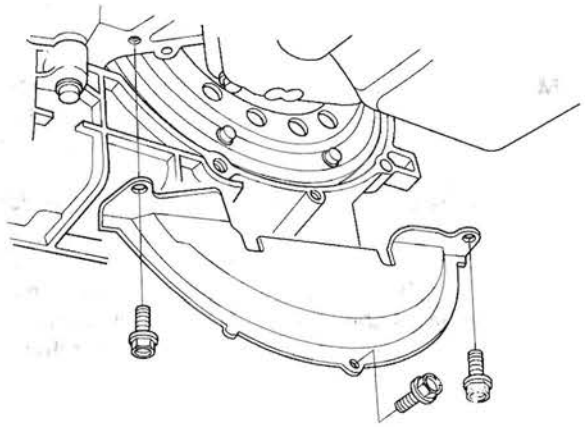

22. Remove the bolts securing the oil pan.

23. Using a flat blade screwdriver, separate the oil pan from the block in the places shown.

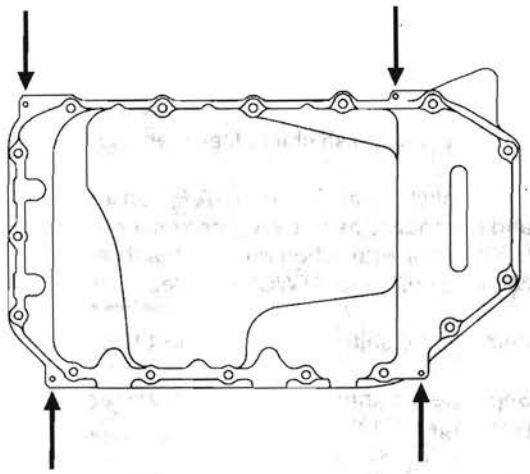

24. Remove the oil pan.

Crankshaft and Piston Removal

1. Remove the engine assembly (see page 5-3).
2. Remove the transmission (see page 14-246).
3. Remove the drive plate (see page 14-267).
4. Remove the oil pan (see page 7-11).
5. Remove the oil pump (see page 8-15).
6. Remove the cylinder head (see page 6-31).
7. Remove the baffle plates.

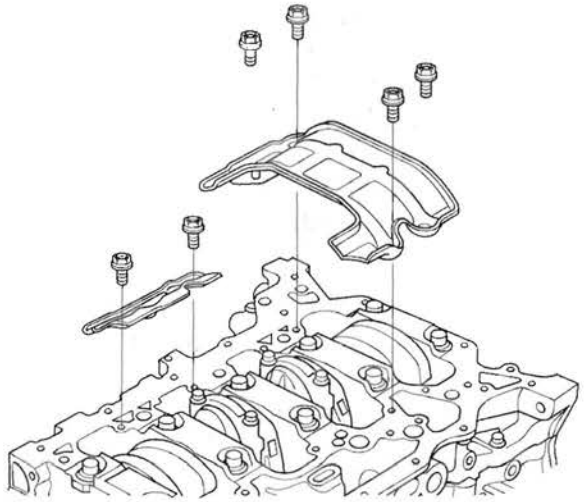

8. Remove the 8 mm bolts.

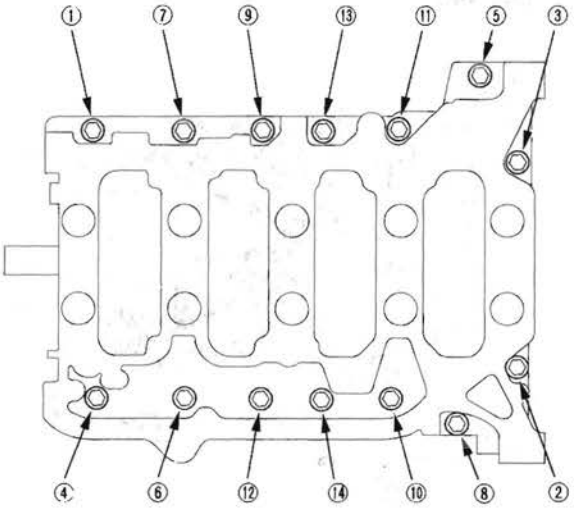

9. Remove the bearing cap bolts. To prevent warpage, unscrew the bolts in sequence 1/3 turn at a time; repeat the sequence until all bolts are loosened.

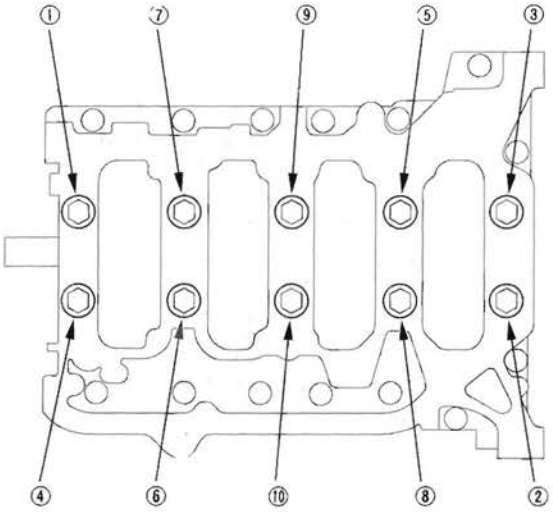

(cont'd)

Crankshaft and Piston Removal (cont'd)

10. Remove the lower block and bearings. Keep all the bearings in order.

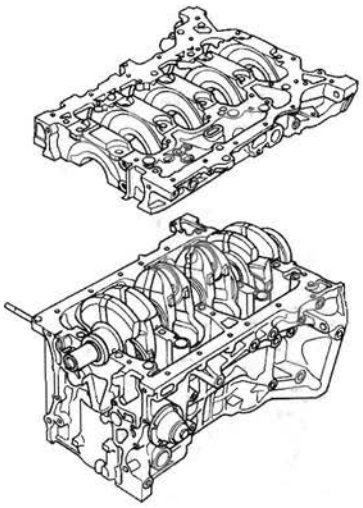

11. Remove the rod caps/bearings. Keep all caps/bearings in order.

12. Lift the crankshaft out of the engine. Be careful not to damage the journals.

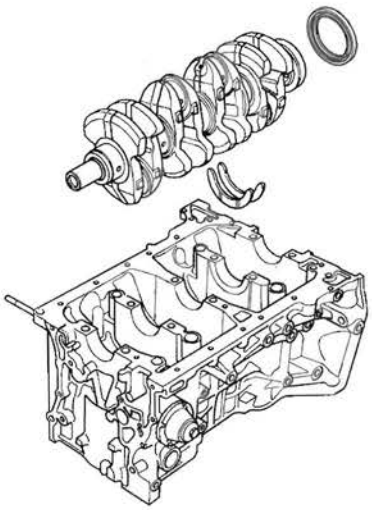

13. Remove the upper bearing halves from the connecting rods, and set them aside with their respective caps.

14. If you can feel a ridge of metal or hard carbon around the top of each cylinder, remove it with a ridge reamer (A). Follow the reamer manufacturer's instructions. If the ridge is not removed, it may damage the pistons as they are pushed out.

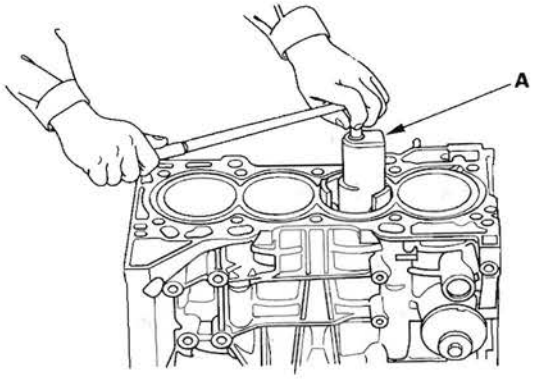

15. Use the wooden handle of a hammer (A) to drive out the piston/connecting rod assembly (B).

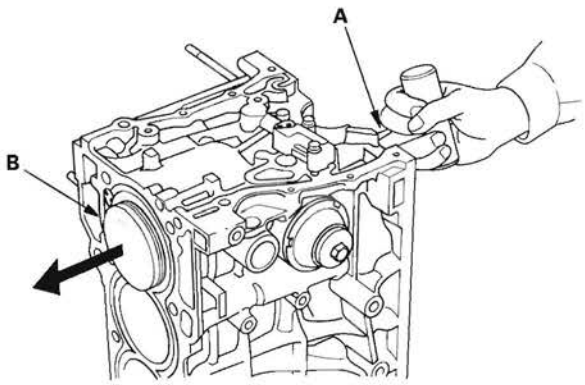

16. Reinstall the lower block and the bearings on the engine in the proper order.

17. Reinstall the connecting rod bearings and caps after removing each piston/connecting rod assembly.

18. Mark each piston/connecting rod assembly with its cylinder number to make sure they are reused in the original order.

    NOTE: The existing number on the connecting rod does not indicate its position in the engine, it indicates the rod bore size.

Crankshaft Inspection

Out-of-Round and Taper

1. Remove the crankshaft from the engine block (see page 7-13).
2. Clean the crankshaft oil passages with pipe cleaners or a suitable brush.
3. Clean the keyway and threads.
4. Measure the out-of-round at the middle of each rod and main journal in two places. The difference between measurements on each journal must not be more than the service limit.

Journal Out-of-Round
Standard (New): 0.005 mm (0.0002 in.) max.
Service Limit: 0.010 mm (0.0004 in.)



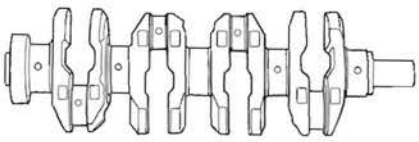





5. Measure the taper at the edges of each rod and main journal. The difference between measurements on each journal must not be more than the service limit.

Journal Taper
Standard (New): 0.005 mm (0.0002 in.) max.
Service Limit: 0.010 mm (0.0004 in.)

Straightness

6. Place the engine block on the surface plate.
7. Clean and install the bearings on the No. 1 and No. 5 journals of the engine block.
8. Lower the crankshaft into the block.
9. Measure runout on all main journals. Rotate the crankshaft two complete revolutions. The difference between measurements on each journal must not be more than the service limit.

Crankshaft Total Runout
Standard (New): 0.03 mm (0.0012 in.) max.
Service Limit: 0.04 mm (0.0016 in.)

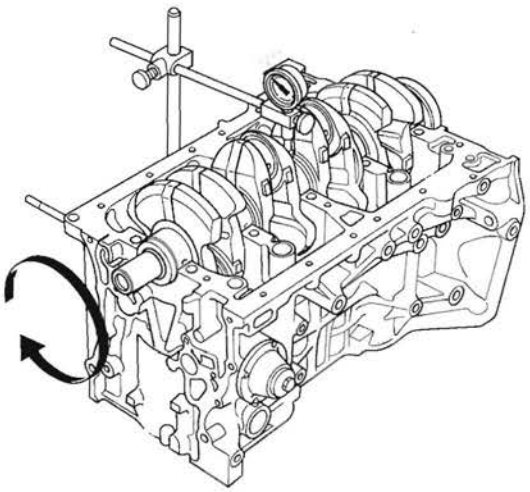

Block and Piston Inspection

1. Remove the crankshaft and pistons (see page 7-13).
2. Check the piston for distortion or cracks.
3. Measure the piston diameter at a point 13 mm (0.5 in.) from the bottom of the skirt. There are two standard-size pistons (No Letter or A, and B). The letter is stamped on the top of the piston. Letters are also stamped on the block as cylinder bore sizes.

Piston Diameter
Standard (New):
No Letter (or A): 86.980—86.990 mm (3.4244—3.4248 in.)
B: 86.970—86.980 mm (3.4240—3.4244 in.)
Service Limit:
No Letter (or A): 86.930 mm (3.4224 in.)
B: 86.920 mm (3.4220 in.)

Oversize Piston Diameter
0.25: 87.230—87.240 mm (3.4342—3.4346 in.)

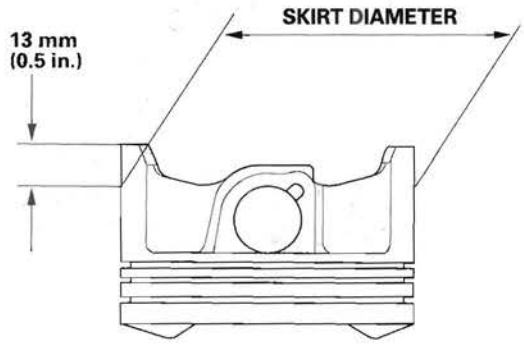

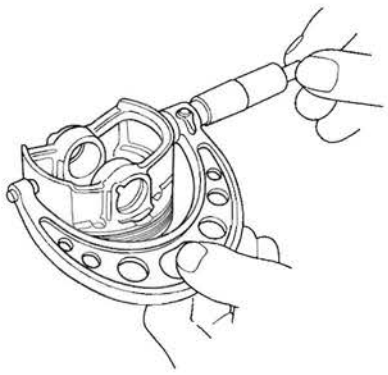

4. Measure the wear and taper in direction X and Y at three levels inside each cylinder as shown. If the measurements in any cylinder are beyond the Oversize Bore Service Limit, replace the block. If the block is being rebored, refer to step 7 after reboring.

Cylinder Bore Size
Standard (New):
A or I: 87.010—87.020 mm (3.4256—3.4260 in.)
B or II: 87.000—87.010 mm (3.4252—3.4256 in.)
Service Limit: 87.070 mm (3.4279 in.)

Oversize Bore
0.25: 87.250—87.260 mm (3.4350—3.4354 in.)

Reboring Limit: 0.25 mm (0.01 in.) max.

Bore Taper
Limit: (Difference between first and third measurement) 0.05 mm (0.002 in.)

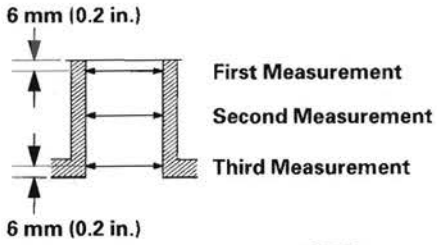

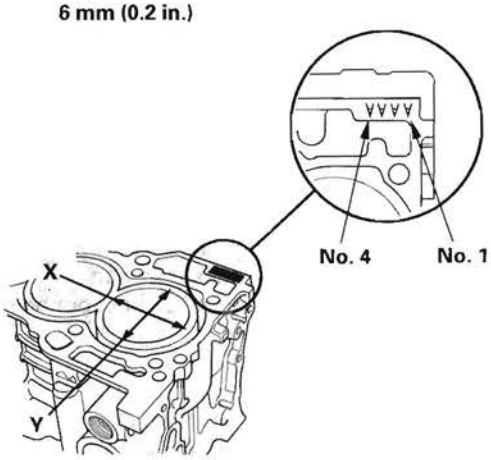

5. Scored or scratched cylinder bores must be honed.

6. Check the top of the block for warpage. Measure along the edges, and across the center as shown.

Engine Block Warpage
Standard (New): 0.07 mm (0.003 in.) max.
Service Limit: 0.10 mm (0.004 in.)

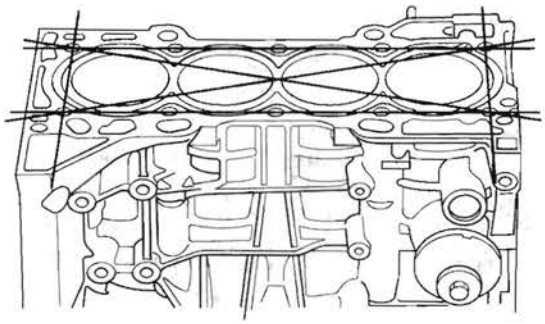

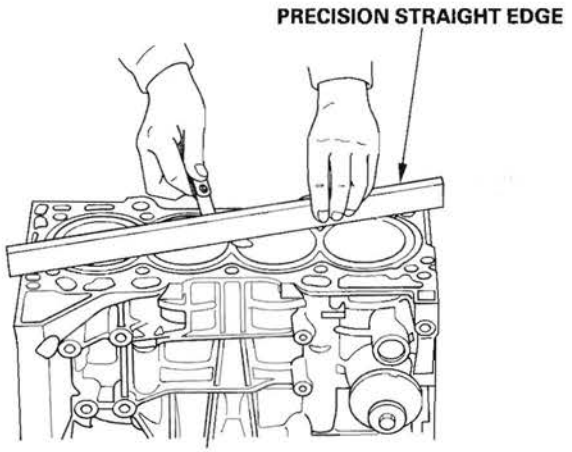

7. Calculate the difference between the cylinder bore diameter and the piston diameter. If the clearance is near or exceeds the service limit, inspect the piston and cylinder bore for excessive wear.

Piston-to-Cylinder Bore Clearance
Standard (New): 0.020—0.040 mm (0.0008—0.0016 in.)
Service Limit: 0.05 mm (0.002 in.)

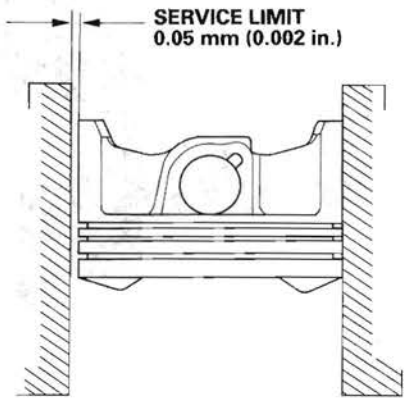

Cylinder Bore Honing

Only a scored or scratched cylinder bore must be honed.

1. Measure the cylinder bores (see page 7-16). If the block is to be reused, hone the cylinders, and remeasure the bores.
2. Hone the cylinder bores with honing oil and a fine (400 grit) stone in a 60 degree cross-hatch pattern (A). Use only a rigid hone with 400 grit or finer stone such as Sunnen, Ammco, or equivalent. Do not use stones that are worn or broken.

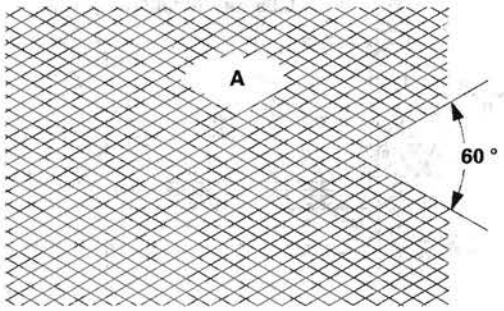

3. When honing is complete, thoroughly clean the engine block of all metal particles. Wash the cylinder bores with hot soapy water, then dry and oil them immediately to prevent rusting. Never use solvent, it will only redistribute the grit on the cylinder walls.
4. If scoring or scratches are still present in the cylinder bores after honing the engine block to the service limit, rebore the engine block. Some light vertical scoring and scratching is acceptable if it is not deep enough to catch your fingernail, and does not run the full length of the bore.

Piston, Pin, and Connecting Rod Replacement

Disassembly

1. Remove the piston from the engine block (see page 7-13).

2. Apply new engine oil to the piston pin snap rings (A), and turn them in the ring grooves until the end gaps are lined up with the cutouts in the piston pin bores (B).

   NOTE: Take care not to damage the ring grooves.

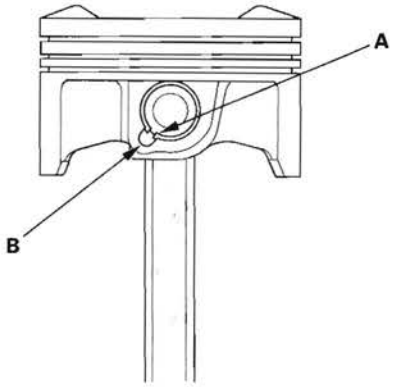

3. Remove both snap rings. Start at the cutout in the piston pin bore. Remove the snap rings carefully so they do not go flying or get lost. Wear eye protection.

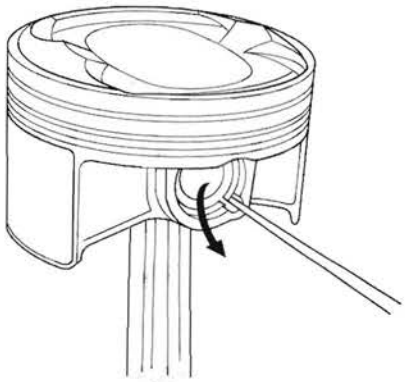

4. Heat the piston and connecting rod assembly to about 158 °F (70 °C), then remove the piston pin.

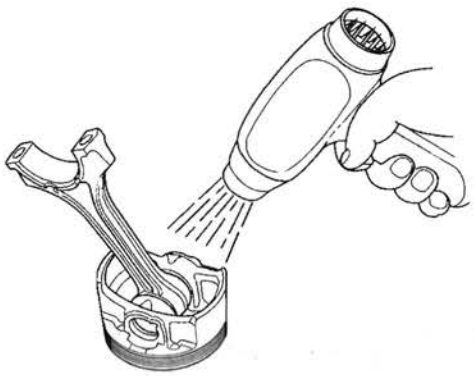

(cont'd)

Piston, Pin, and Connecting Rod Replacement (cont'd)

Inspection

NOTE: Inspect the piston, piston pin, and connecting rod when they are at room temperature.

1. Measure the diameter of the piston pin.

Piston Pin Diameter
Standard (New): 21.961—21.965 mm (0.8646—0.8648 in.)
Service Limit: 21.953 mm (0.8643 in.)

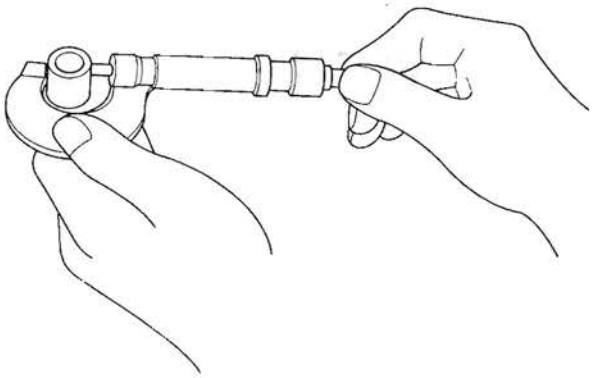

2. Zero the dial indicator to the piston pin diameter.

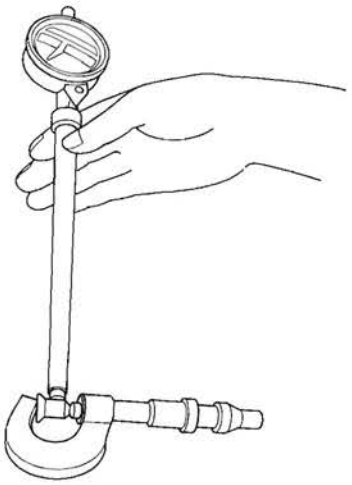

3. Check the difference between the piston pin diameter and piston pin hole diameter in the piston.

Piston Pin-to-Piston Clearance
Standard (New): −0.005 to +0.002 mm (−0.00020 to +0.00008 in.)
Service Limit: 0.005 mm (0.0002 in.)

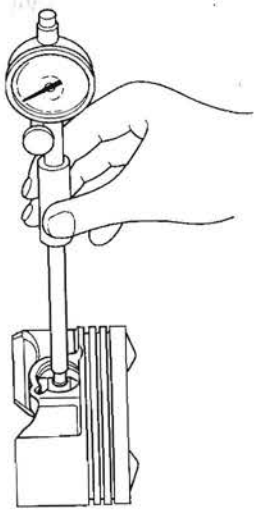

4. Measure the piston pin-to-connecting rod clearance.

Piston Pin-to-Connecting Rod Clearance
Standard (New): 0.005—0.015 mm (0.0002—0.0006 in.)
Service Limit: 0.02 mm (0.0008 in.)

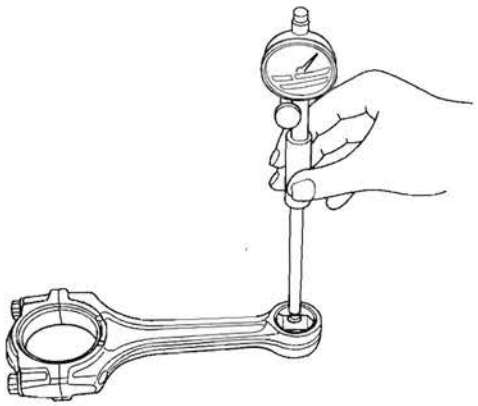

Reassembly

1. Install a piston pin snap ring (A).

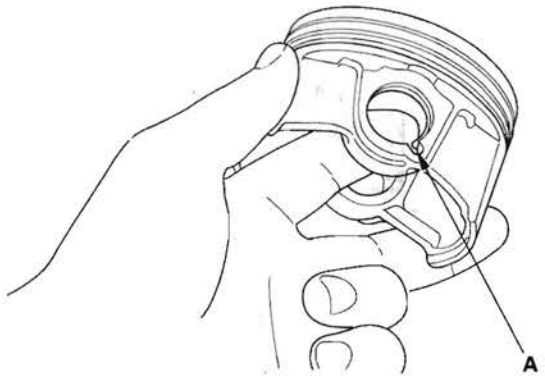

2. Coat the piston pin bore in the piston, the bore in the connecting rod, and the piston pin with new engine oil.

3. Heat the piston to about 158 °F (70 °C).

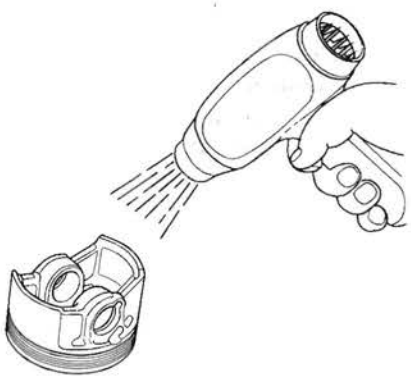

4. Assemble the piston (A) and connecting rod (B) with the arrow (C) and the embossed mark (D) on the same side. Install the piston pin (E).

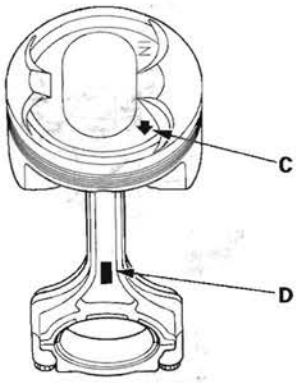

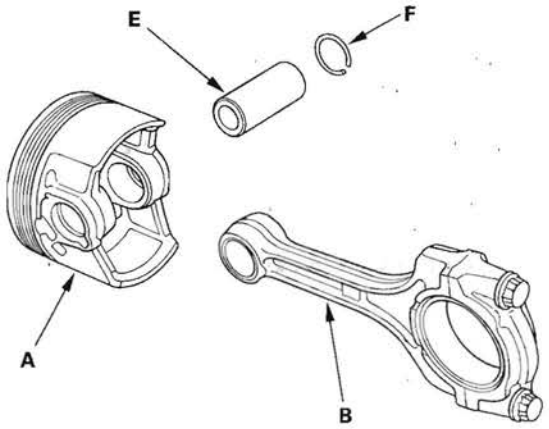

5. Install the remaining snap ring (F).

6. Turn the snap rings in the ring grooves until the end gaps are positioned at the bottom of the piston.

Piston Ring Replacement

1. Remove the piston from the engine block (see page 7-13).

2. Using a ring expander (A), remove the old piston rings (B).

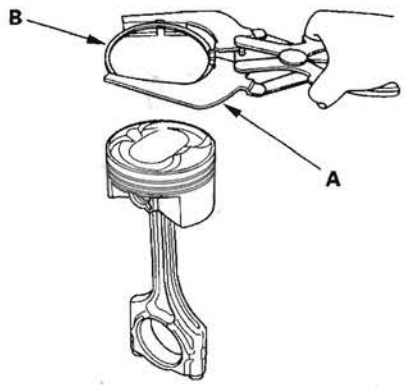

3. Clean all ring grooves thoroughly with a squared-off broken ring or ring groove cleaner with a blade to fit the piston grooves.
   The top and 2nd ring grooves are 1.2 mm (0.05 in.) wide. The oil ring groove is 2.0 mm (0.08 in.) wide. File down a blade if necessary.
   Do not use a wire brush to clean the ring grooves, or cut the ring grooves deeper with the cleaning tools.

   NOTE: If the piston is to be separated from the connecting rod, do not install new rings yet.

4. Using a piston that has its rings removed, push a new ring (A) into the cylinder bore 15—20 mm (0.6—0.8 in.) from the bottom.

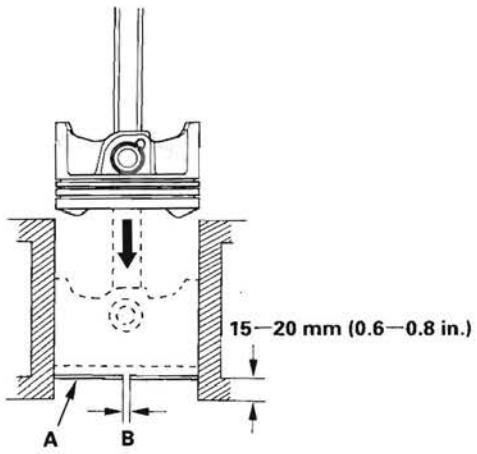

5. Measure the piston ring end-gap (B) with a feeler gauge:

   - If the gap is too small, check to see if you have the proper rings for your engine.
   - If the gap is too large, recheck the cylinder bore diameter against the wear limits (see page 7-16). If the bore is beyond the service limit, the engine block must be rebored.

Piston Ring End-Gap

Top Ring:
Standard (New): 0.20—0.35 mm (0.008—0.014 in.)
Service Limit: 0.60 mm (0.024 in.)

Second Ring:
Standard (New): 0.40—0.55 mm (0.016—0.022 in.)
Service Limit: 0.70 mm (0.028 in.)

Oil Ring:
Standard (New): 0.25—0.65 mm (0.010—0.026 in.)
Service Limit: 0.75 mm (0.030 in.)

6. Install the top ring and the second ring as shown. The top ring (A) has a 1R mark, and the second ring (B) has a 2R mark. The manufacturing marks (C) must be facing upward.

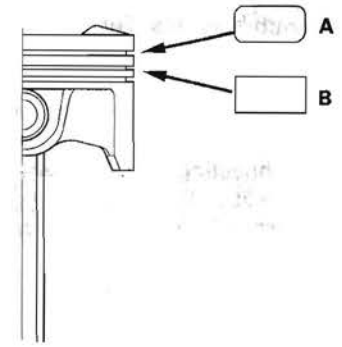

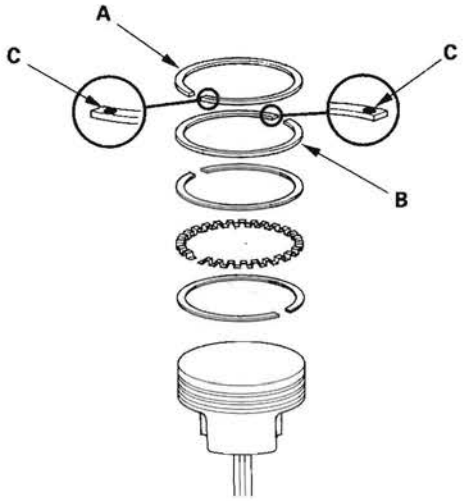

Piston Ring Dimensions

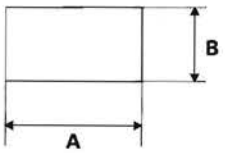

Top Ring (Standard):
A: 3.1 mm (0.12 in.)
B: 1.2 mm (0.05 in.)

Second Ring (Standard):
A: 3.4 mm (0.13 in.)
B: 1.2 mm (0.05 in.)

7. Rotate the rings in their grooves to make sure they do not bind.

8. Position the ring end gaps as shown:

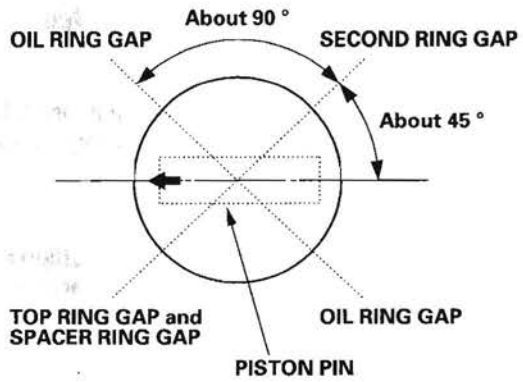

9. After installing a new set of rings, measure the ring-to-groove clearances:

Top Ring Clearance
Standard (New): 0.035—0.060 mm (0.0014—0.0024 in.)
Service Limit: 0.13 mm (0.005 in.)

Second Ring Clearance
Standard (New): 0.030—0.055 mm (0.0012—0.0022 in.)
Service Limit: 0.13 mm (0.005 in.)



Piston Installation

If the Crankshaft is Already Installed

1. Set the crankshaft to bottom dead center (BDC) for each cylinder as its piston is installed.
2. Remove the connecting rod caps, then install the ring compressor. Check that the bearing is securely in place.
3. Apply new engine oil to the piston, inside of the ring compressor, and the cylinder bore, then attach the ring compressor to the piston/connecting rod assembly.
4. Position the mark (A) to face the cam chain side of the engine.

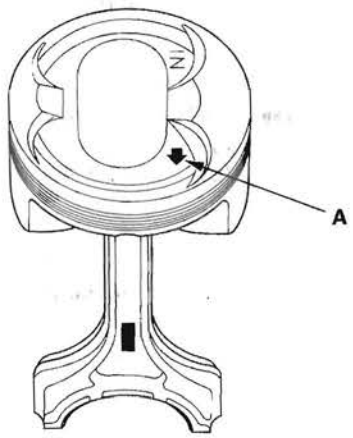

5. Position the piston in the cylinder, and tap it in using the wooden handle of a hammer (A). Push down on the ring compressor (B) to prevent the rings from expanding before entering the cylinder bore.

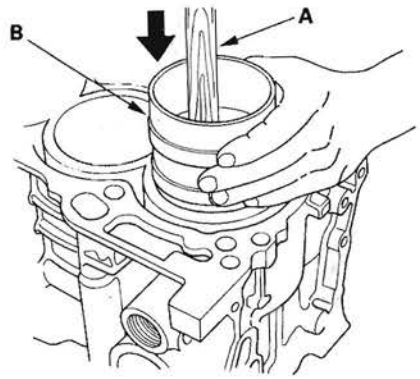

6. Stop after the ring compressor pops free, and check the connecting rod-to-crank journal alignment before pushing the piston into place.
7. Check the connecting rod bearing clearance with plastigage (see page 7-8).
8. Inspect the connecting rod bolts (see page 7-25).
9. Install the rod caps with bearings. Torque the bolts to 20 N·m (2.0 kgf·m, 14 lbf·ft).
10. Tighten the connecting rod bolts an additional 90 °.

    NOTE: Remove the connecting rod bolt if you tightened it beyond the specified angle, and go back to step 8 of the procedure. Do not loosen it back to the specified angle.

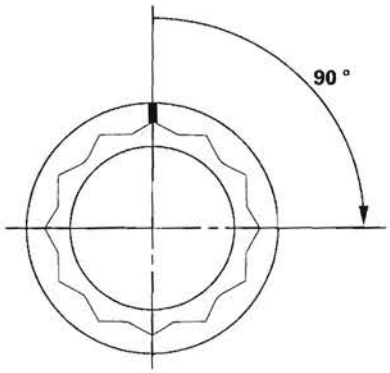

If the Crankshaft is Not Installed

1. Remove the connecting rod caps, then install the ring compressor, and check that the bearing is securely in place.
2. Apply new engine oil to the piston, inside of the ring compressor, and the cylinder bore, then attach the ring compressor to the piston/connecting rod assembly.
3. Position the mark (A) to face the cam chain side of the engine.

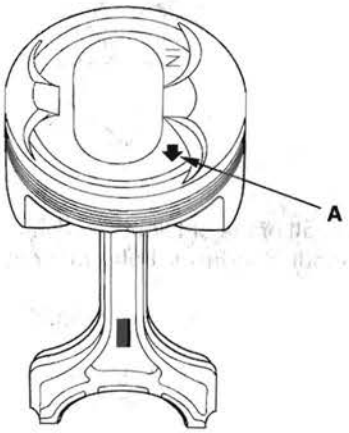

4. Position the piston in the cylinder, and tap it in using the wooden handle of a hammer (A). Push down on the ring compressor (B) to prevent the rings from expanding before entering the cylinder bore.

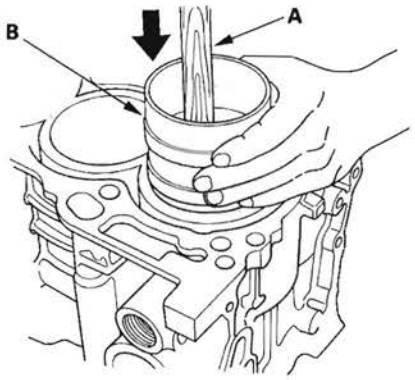

5. Position all pistons at top dead center (TDC).

Connecting Rod Bolt Inspection

1. Measure the diameter of each connecting rod bolt at point A and point B.

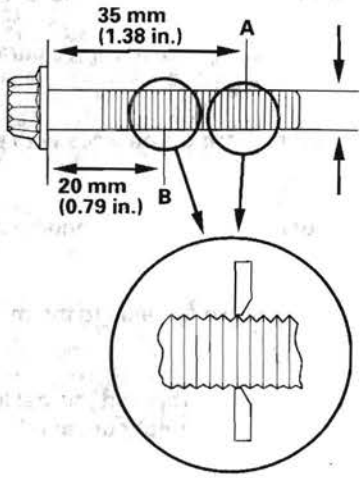

2. Calculate the difference in diameter between point A and point B.

   Point A—Point B = Difference in Diameter

   Difference in Diameter
   Specification: 0—0.1 mm (0—0.004 in.)

3. If the difference in diameter is out of specification, replace the connecting rod bolt.

Crankshaft Installation

Special Tools Required
- Driver 07749-0010000
- Oil seal driver attachment, 96 mm 07ZAD-PNAA100

1. Check the connecting rod bearing clearance with plastigage (see page 7-8).
2. Check the main bearing clearance with plastigage (see page 7-6).
3. Install the bearing halves in the engine block and connecting rods.
4. Apply a coat of new engine oil to the main bearings and rod bearings.
5. Hold the crankshaft so that rod journal No. 2 and rod journal No. 3 are straight up, and lower the crankshaft into the block.
6. Apply new engine oil to the thrust washer surfaces. Install the thrust washers (A) in the No. 4 journal of the engine block.

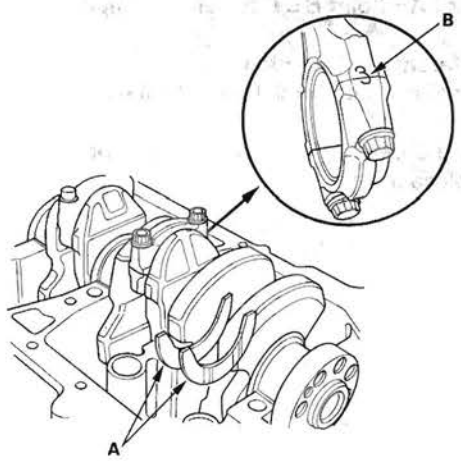

7. Inspect the connecting rod bolts (see page 7-25).
8. Apply engine oil to the threads of the connecting rod bolts.
9. Seat the rod journals into connecting rod No. 1 and connecting rod No. 4. Line up the mark (B) on the connecting rod and cap, then install the caps and bolts finger-tight.
10. Rotate the crankshaft clockwise, and seat the journals into connecting rod No. 2 and connecting rod No. 3. Line up the mark on the connecting rod and cap, then install the caps and bolts finger-tight.
11. Tighten the connecting rod bolts to 20 N·m (2.0 kgf·m, 14 lbf·ft).
12. Tighten the connecting rod bolts an additional 90 °.

    NOTE: Remove the connecting rod bolt if you tightened it beyond the specified angle, and go back to step 8 of the procedure. Do not loosen it back to the specified angle.

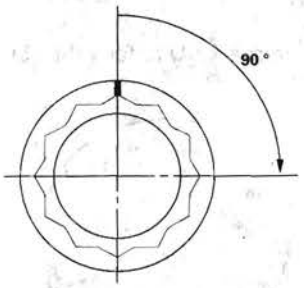

13. Remove all of the old liquid gasket from the lower block mating surfaces, bolts, and bolt holes.
14. Clean and dry the lower block mating surfaces.
15. Apply liquid gasket, P/N 08717-0004, 08718-0001, 08718-0003, or 08718-0009, evenly to the engine block mating surface of the lower block and to the inner threads of the bolt holes. Install the component within 5 minutes of applying the liquid gasket.

    NOTE:
    - If you apply liquid gasket P/N 08718-0012, the component must be installed within 4 minutes.
    - If too much time has passed after applying the liquid gasket, remove the old liquid gasket and residue, then reapply new liquid gasket.

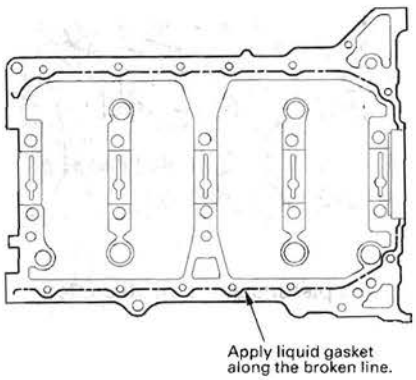

16. Put the lower block on the engine block.

17. Apply new engine oil to the threads of the bearing cap bolts.

18. Tighten the bearing cap bolts, in sequence, to 29 N·m (3.0 kgf·m, 22 lbf·ft).

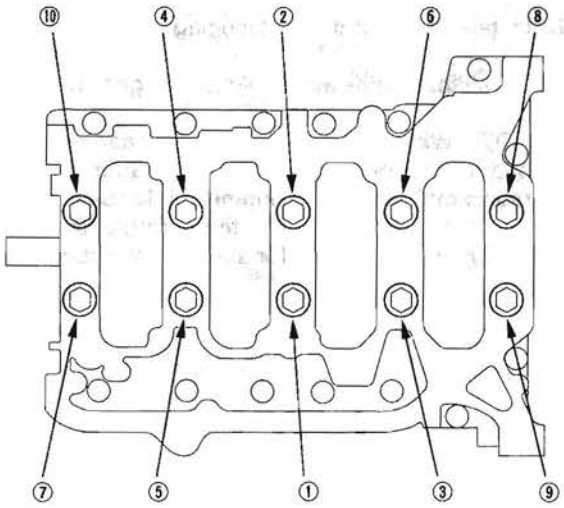

19. Tighten the bearing cap bolts an additional 56 °.

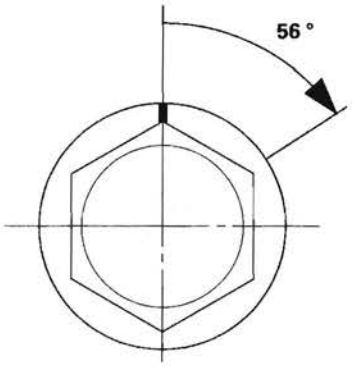

20. Tighten the 8 mm bolts, in sequence, to 22 N·m (2.2 kgf·m, 16 lbf·ft).

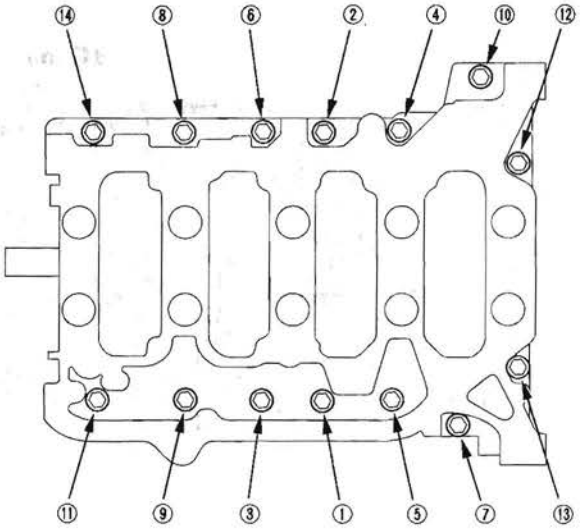

21. Use the driver and attachment to drive a new oil seal squarely into the block to the specified installed height.

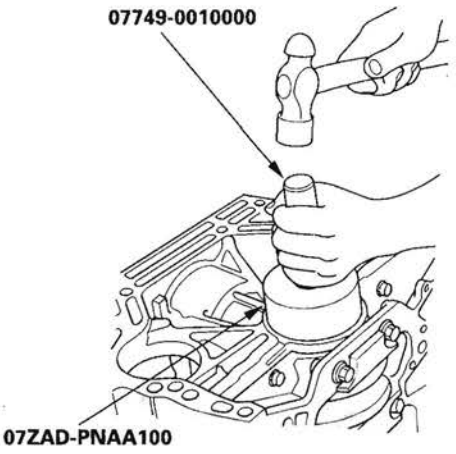

(cont'd)

Crankshaft Installation (cont'd)

22. Measure the distance between the engine block (A) and oil seal (B).

Oil Seal Installed Height: 0.2—1.2 mm (0.001—0.047 in.)

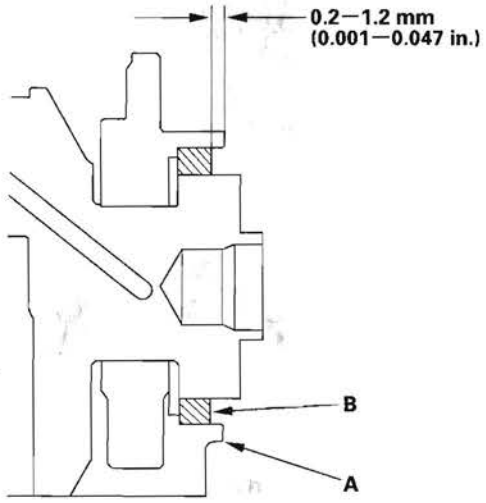

23. Install the baffle plates.

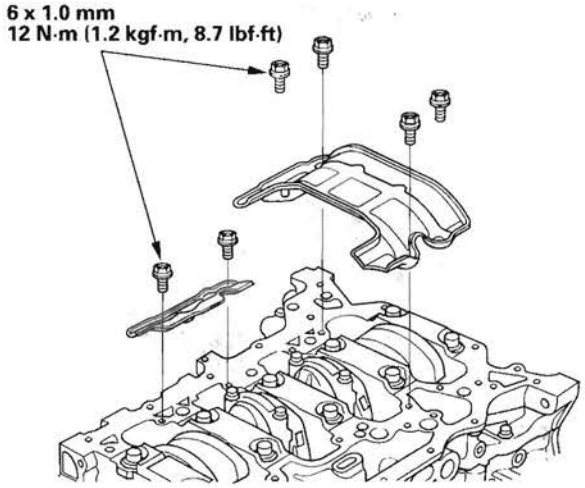

24. Install the oil pump (see page 8-20).
25. Install the oil pan (see page 7-29).
26. Install the cylinder head (see page 6-50).
27. Install the drive plate (see page 14-267).
28. Install the transmission (see page 14-256).
29. Install the engine assembly (see page 5-12).

NOTE: Whenever any crankshaft or connecting rod bearing is replaced, it is necessary after reassembly to run the engine at idle speed until it reaches normal operating temperature, then continue to running it for about 15 minutes.

Oil Pan Installation

1. Remove all of the old liquid gasket from the oil pan mating surfaces, bolts, and bolt holes.

2. Clean and dry the oil pan mating surfaces.

3. Apply liquid gasket, P/N 08717-0004, 08718-0001, 08718-0003, or 08718-0009, evenly to the engine block mating surface of the oil pan and to the inner threads of the bolt holes. Install the component within 5 minutes of applying the liquid gasket.

   NOTE:
   - If you apply liquid gasket P/N 08718-0012, the component must be installed within 4 minutes.
   - If too much time has passed after applying the liquid gasket, remove the old liquid gasket and residue, then reapply new liquid gasket.

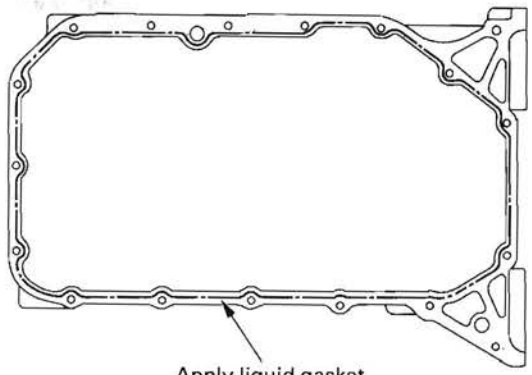

4. Install the oil pan.

5. Tighten the bolts in two or three steps. In the final step, tighten all bolts, in sequence, to 12 N·m (1.2 kgf·m, 8.7 lbf·ft). Wipe off the excess liquid gasket on the each side of crankshaft pulley and drive plate.

   NOTE:
   - Wait at least 30 minutes before filling the engine with oil.
   - Do not run the engine for at least 3 hours after installing the oil pan.

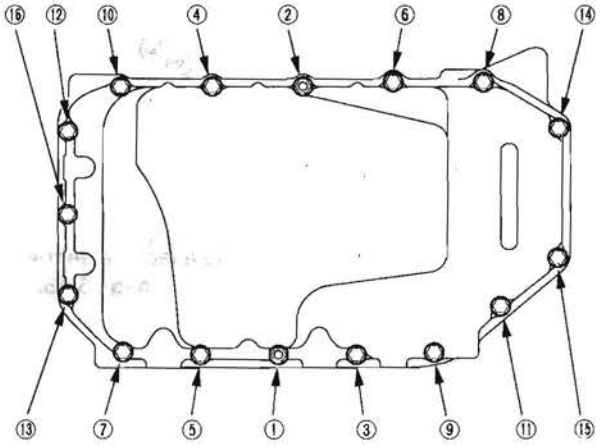

6. Install the torque converter cover.

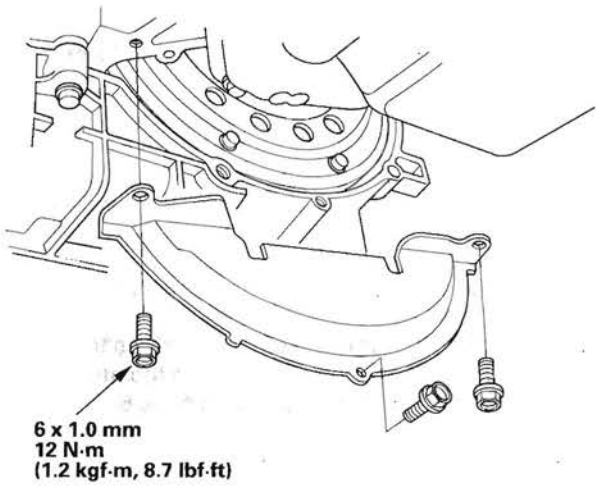

(cont'd)

Oil Pan Installation (cont'd)

7. Install the lower torque rod bracket.

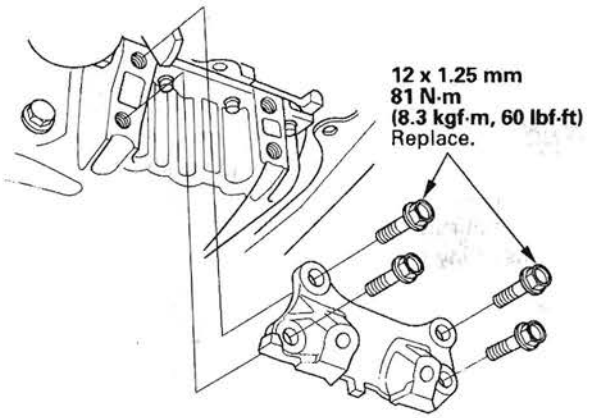

8. If the engine is still in the vehicle, do steps 9 through 30.
9. Using the subframe adapter and a jack, raise the subframe up to body (see step 15 on page 5-15).
10. Loosely install the new 14 x 1.5 mm bolts (see step 16 on page 5-15).
11. Align all reference marks on the front subframe with the body, then tighten the bolts on the front subframe to the specified torque (see step 17 on page 5-16).
12. Tighten the new subframe mounting bolts on both side (see step 18 on page 5-16).
13. Lower the vehicle on the lift.
14. Loosen the upper torque rod mounting bolt (see step 6 on page 5-14).
15. Raise the vehicle on the lift to full height.
16. Install the lower torque rod, then tighten the new lower torque rod mounting bolts in the numbered sequence shown (see step 19 on page 5-16).
17. Lower the vehicle on the lift.
18. Tighten the upper torque rod mounting bolt (see step 20 on page 5-16).
19. Install the automatic transmission fluid (ATF) filter.

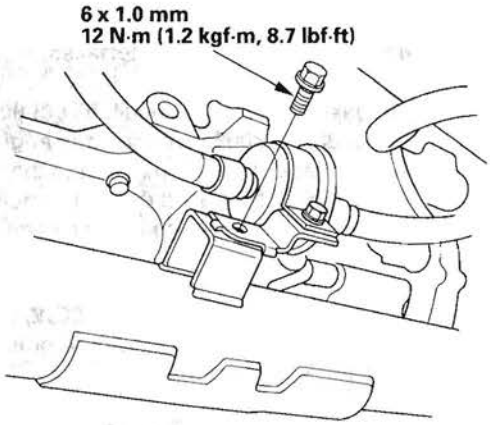

20. Install the bolts securing the left steering gearbox mounting bracket (see step 25 on page 5-17).
21. Install the bolts securing the right steering gearbox mounting bracket (see step 26 on page 5-17).
22. Install the power steering (P/S) fluid line bracket, and secure the hose with the hose clamps (see step 27 on page 5-17).
23. Install the propeller shaft (see page 16-41).
24. Install a new set ring on the end of each driveshaft, then install the driveshafts. Make sure each ring "clicks" into place in the differential and intermediate shaft.
25. Connect the lower arms to the knuckles (see page 18-12).
26. Install the shift cable (see page 14-284).
27. Install the three way catalytic converter (TWC). Use new gaskets and new self-locking nuts. Connect the air fuel ratio (A/F) sensor connector and secondary heated oxygen sensor (secondary HO2S) connector (see step 32 on page 5-18).
28. Install the splash shield (see step 34 on page 5-18).
29. Install the front wheels.
30. Check the wheel alignment (see page 18-5).

Transmission End Crankshaft Oil Seal Installation - In Car

Special Tools Required
- Driver 07749-0010000
- Oil seal driver attachment 96 mm 07ZAD-PNAA100

1. Remove the transmission (see page 14-246).
2. Remove the drive plate (see page 14-267).
3. Clean and dry the crankshaft oil seal housing.
4. Use the driver and attachment to drive a new oil seal squarely into the block to the specified installed height.

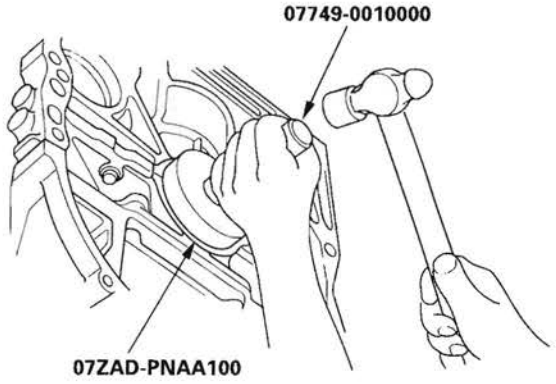

5. Measure the distance between the engine block (A) and oil seal (B).

Oil Seal Installed Height: 0.2—1.2 mm (0.001—0.047 in.)

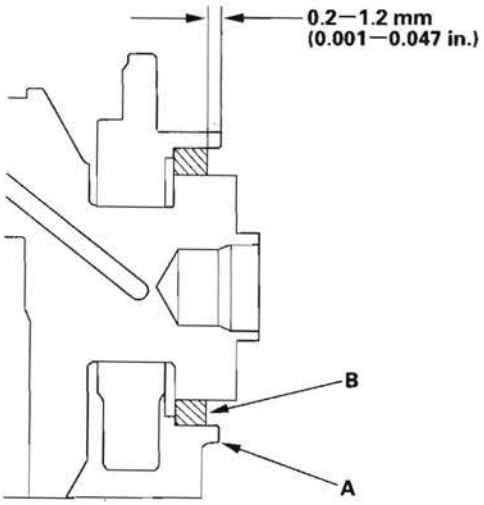

6. Install the drive plate (see page 14-267).
7. Install the transmission (see page 14-256).

Sealing Bolt Installation

NOTE: When installing the sealing bolt (A), always use a new washer (except the bolts (B) and (C)).

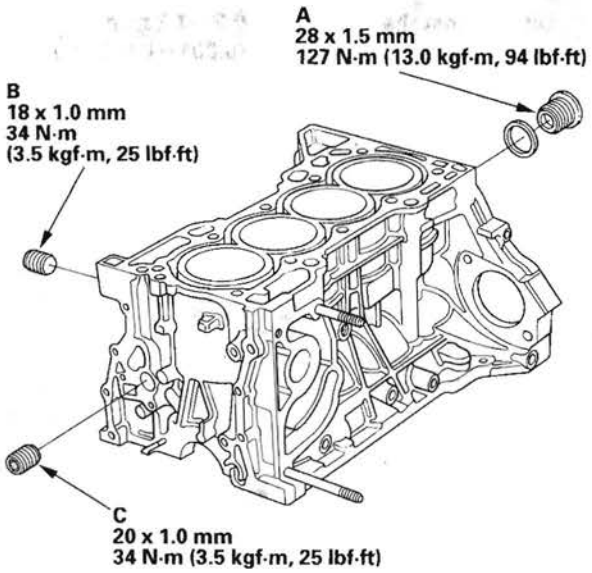

Engine Mechanical

Engine Lubrication

Special Tools 8-2
Component Location Index 8-3
Symptom Troubleshooting Index 8-4
Low Oil Pressure Indicator Circuit Diagram 8-5
Low Oil Pressure Indicator Circuit Troubleshooting (Open) 8-6
Low Oil Pressure Indicator Circuit Troubleshooting (Short) 8-7
Oil Pressure Switch Test 8-8
Oil Pressure Switch Replacement 8-8
Oil Pressure Test 8-9
Engine Oil Replacement 8-10
Engine Oil Filter Replacement 8-11
Oil Filter Base Replacement 8-12
Oil Filter Feed Pipe Replacement 8-12
Engine Oil Gallery Cap Replacement 8-13
Oil Pump Overhaul 8-14

Special Tools

Ref. No.	Tool Number	Description	Qty
①	07AAA-PLLA100	Oil Filter Wrench	1

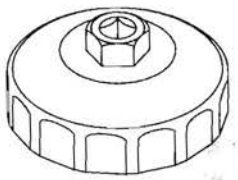

①

Component Location Index

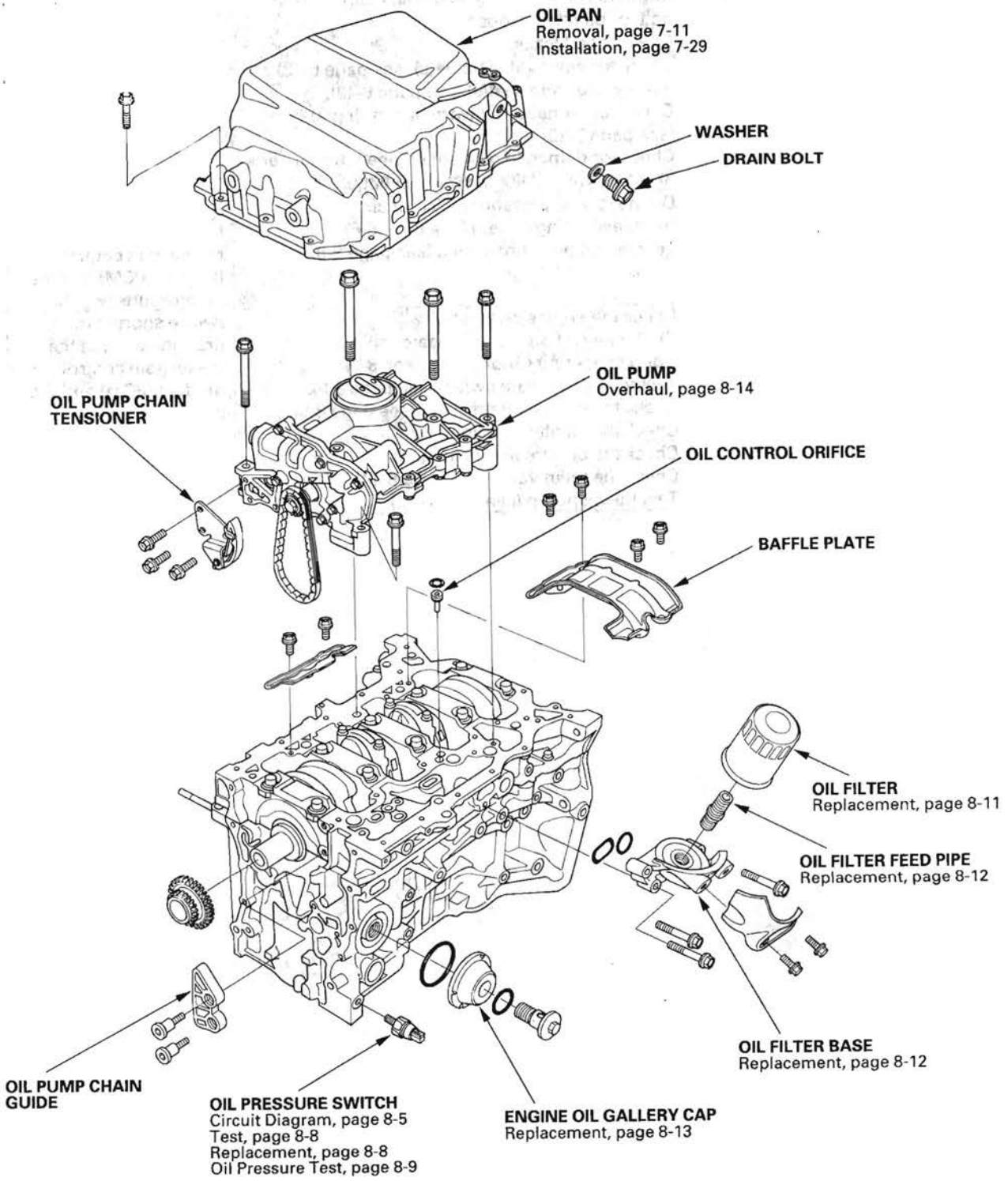

Symptom Troubleshooting Index

Symptom	Diagnostic procedure	Also check for
Excessive engine oil consumption	1. Check to see if the engine oil filler cap, oil drain bolt, or oil filter is loose. 2. Check for oil leaks. 3. Check for worn valve guide(s) (see page 6-43) or worn valve stem seal(s) (see page 6-42). 4. Check for damaged or worn piston ring(s) (see page 7-22). 5. Check for damaged or worn engine internal parts (cylinder wall, pistons, etc.) (see page 7-16).	
Low oil pressure indicator does not come on with the ignition switch ON (II)	1. Do the low oil pressure indicator circuit troubleshooting (Open) (see page 8-6). 2. Test the oil pressure switch (see page 8-8).	An open in the wire between the powertrain control module (PCM) and the oil pressure switch
Low oil pressure indicator stays on	1. Check the engine oil level. 2. Do the low oil pressure indicator circuit troubleshooting (Short) (see page 8-7). 3. Test the oil pressure switch (see page 8-8). 4. Check the engine oil pressure (see page 8-9). 5. Check the oil filter for clogging. 6. Check the oil screen for clogging. 7. Check the relief valve (see page 8-14). 8. Test the oil pump (see page 8-16).	A wire shorted to ground between the powertrain control module (PCM) and the oil pressure switch

Low Oil Pressure Indicator Circuit Diagram

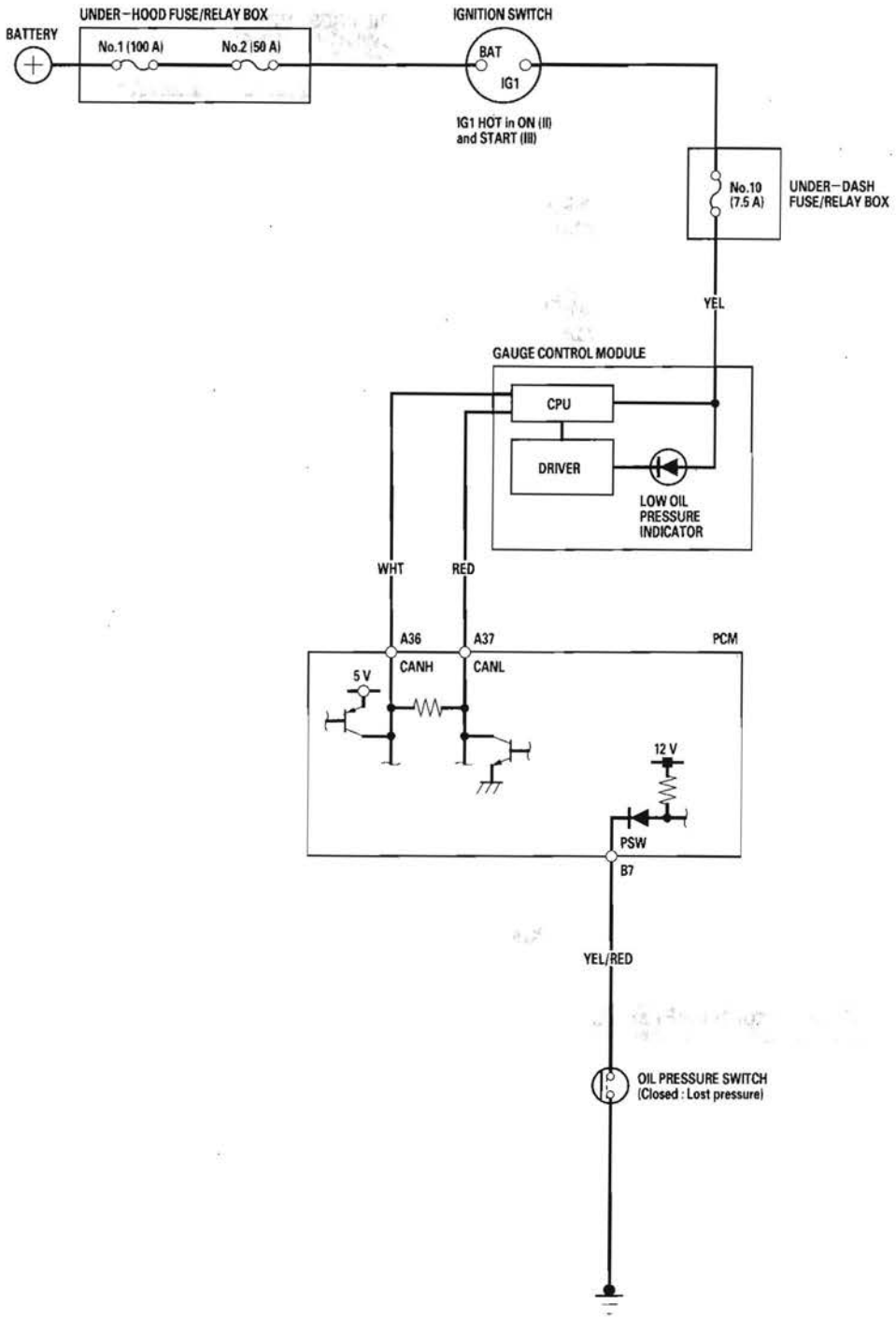

Low Oil Pressure Indicator Circuit Troubleshooting (Open)

1. Connect the Honda Diagnostic System (HDS) to the data link connector (DLC) (see step 2 on page 11-3).
2. Turn the ignition switch ON (II).
3. Make sure the HDS communicates with the vehicle and the powertrain control module (PCM). If it doesn't communicate, troubleshoot the DLC circuit (see page 11-197).
4. Check for DTCs (see page 11-3). If a DTC is present, diagnose, and repair the cause before continuing with this test.
5. Turn the ignition switch ON (II), select PGM-FI, and check the OIL PRESSURE SWITCH in the DATA LIST with the HDS.

   Is "ON" indicated?

   YES—Replace the gauge control module (see page 22-248). ■

   NO—Go to step 6.
6. Check the oil pressure switch (see page 8-8).

   Is the oil pressure switch OK?

   YES—Go to step 7.

   NO—Replace the oil pressure switch (see page 8-8). ■
7. Turn the ignition switch ON (II), and jump the SCS line with the HDS, then turn the ignition switch OFF.

   NOTE: This step must be done to protect the PCM from damage.
8. Disconnect PCM connector B (44P) and the oil pressure switch connector.
9. Check for continuity between PCM connector terminal B7 and the oil pressure switch connector.

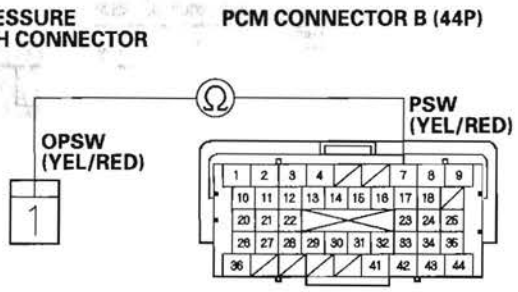

Terminal side of female terminals

Is there continuity?

YES—Update the PCM if it does not have the latest software (see page 11-7), or substitute a known-good PCM (see page 11-8), then recheck. If the symptom/indication goes away with a known-good PCM, replace the original PCM (see page 11-219). ■

NO—Repair open in the wire between the oil pressure switch and the PCM. ■

Low Oil Pressure Indicator Circuit Troubleshooting (Short)

1. Connect the Honda Diagnostic System (HDS) to the data link connector (DLC) (see step 2 on page 11-3).
2. Turn the ignition switch ON (II).
3. Make sure the HDS communicates with the vehicle and the powertrain control module (PCM). If it doesn't communicate, troubleshoot the DLC circuit (see page 11-197).
4. Check for DTCs (see page 11-3). If a DTC is present, diagnose, and repair the cause before continuing with this test.
5. Start the engine, select PGM-FI, and check the OIL PRESSURE SWITCH in the DATA LIST with the HDS.

   Is "OFF" indicated?

   YES—Replace the gauge control module (see page 22-248). ■

   NO—Go to step 6.
6. Turn the ignition switch OFF.
7. Disconnect the oil pressure switch connector.
8. Start the engine, and check the OIL PRESSURE SWITCH in the DATA LIST with the HDS.

   Is "OFF" indicated?

   YES—Go to step 9.

   NO—Go to step 10.
9. Check the oil pressure switch (see page 8-8).

   Is the oil pressure switch OK?

   YES—Do the oil pressure test (see page 8-9).

   NO—Replace the oil pressure switch (see page 8-8). ■
10. Turn the ignition switch ON (II), and jump the SCS line with the HDS, then turn the ignition switch OFF.

    NOTE: This step must be done to protect the PCM from damage.
11. Disconnect PCM connector B (44P) and the oil pressure switch connector.
12. Check for continuity between the oil pressure switch connector and body ground.

OIL PRESSURE SWITCH CONNECTOR

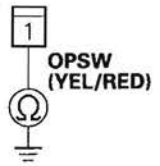

Terminal side of female terminal

Is there continuity?

YES—Repair short in the wire between the oil pressure switch and the PCM. ■

NO—Update the PCM if it does not have the latest software (see page 11-7), or substitute a known-good PCM (see page 11-8), then recheck. If the symptom/indication goes away with a known-good PCM, replace the original PCM (see page 11-219). ■

Oil Pressure Switch Test

1. Remove the oil pressure switch connector (A) from the engine oil pressure switch (B).

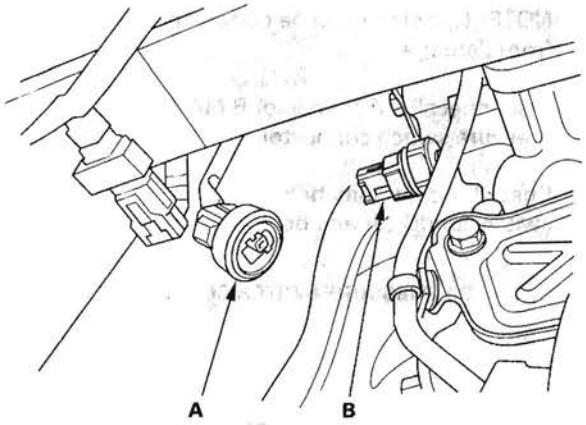

2. Check for continuity between the oil pressure switch terminal and the engine (ground). There should be continuity with the engine stopped. There should be no continuity with the engine running.

Oil Pressure Switch Replacement

1. Disconnect the oil pressure switch connector, then remove the oil pressure switch.

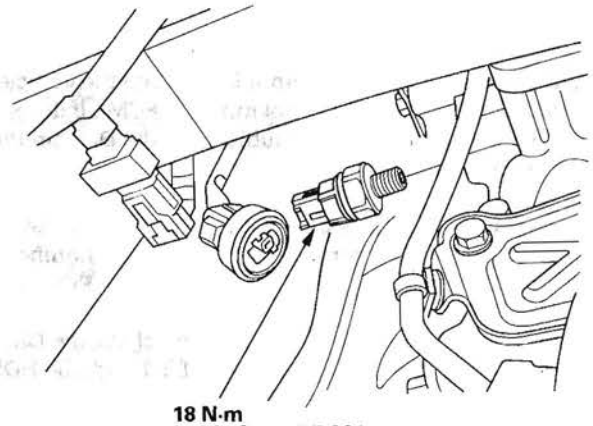

2. Remove any old liquid gasket from the switch and switch mounting hole.

3. Apply a very small amount of liquid gasket to the oil pressure switch threads, then install the oil pressure switch.

   NOTE: Using too much liquid gasket may cause liquid gasket to enter the oil passage or the end of the new oil pressure switch.

Oil Pressure Test

NOTE: If the oil pressure warning light stays on with the engine running, check the engine oil level. If the oil level is correct:

1. Remove the oil pressure switch, and install an oil pressure gauge (A).

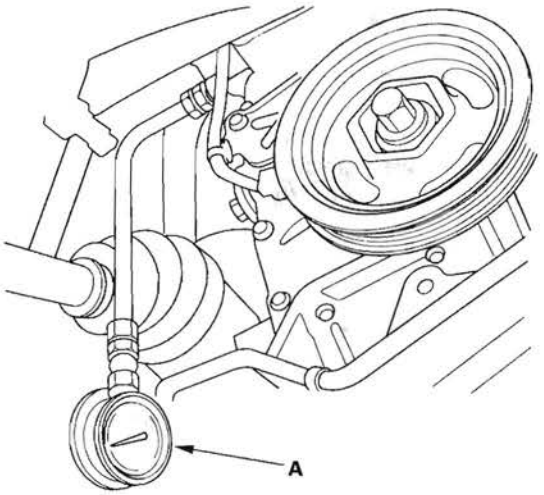

2. Start the engine. Shut it off immediately if the gauge registers no oil pressure. Repair the problem before continuing.

3. Allow the engine to reach operating temperature (fan comes on at least twice). The pressure should be:

   Engine Oil Temperature: 176 °F (80 °C)
   Engine Oil Pressure:
   At Idle: 70 kPa (0.7 kgf/cm², 10 psi) min.
   At 3,000 rpm: 300 kPa (3.1 kgf/cm², 44 psi) min.

4. If the oil pressure is out of specifications, inspect these items:

   - Replace the oil filter (see page 8-11).
   - Inspect the oil pressure relief valve (see page 8-14).
   - Check the oil screen for clogging.
   - Inspect the oil pump (see page 8-16).

Engine Oil Replacement

1. Warm up the engine.
2. Remove the drain bolt (A), and drain the engine oil.

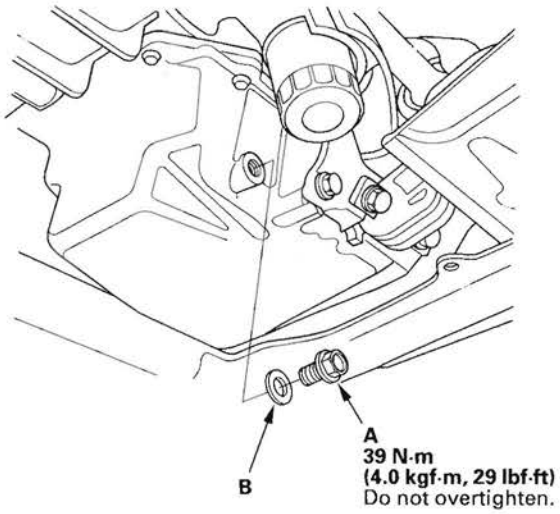

3. Reinstall the drain bolt with a new washer (B).
4. Refill the engine with the recommended oil (see page 3-2).

Capacity
At Oil Change:
4.0 L (4.2 US qt)
At Oil Change Including Filter:
4.2 L (4.4 US qt)
After Engine Overhaul:
5.3 L (5.6 US qt)

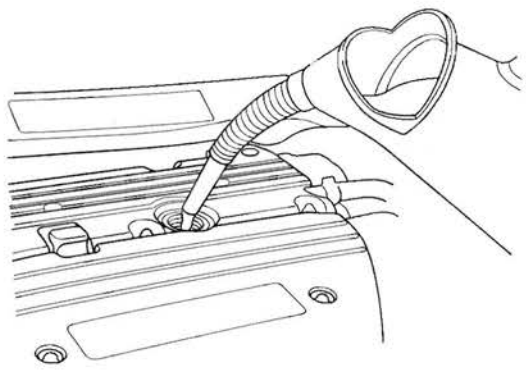

5. If the maintenance minder required to replace the engine oil, reset the maintenance minder (see page 3-6) and this procedure is complete. If the maintenance minder did not require to replace the engine oil, go to step 6
6. Connect the Honda Diagnostic System (HDS) to the data link connector (DLC) (see step 2 on page 11-3).
7. Turn the ignition switch ON (II).
8. Make sure the HDS communicates with the vehicle and the powertrain control module (PCM). If it doesn't troubleshoot the DLC circuit (see page 11-197).
9. Select the BODY ELECTRICAL with the HDS.
10. Select the ADJUSTMENT in GAUGE MENU with the HDS.
11. Select the RESET in the MAINTENANCE MINDER with the HDS.
12. Select the RESETTING THE ENGINE OIL LIFE with the HDS.

    NOTE: If you changed the automatic transmission fluid (ATF) at the same time with the engine oil, select RESETTING THE ENGINE OIL LIFE AND ATF with the HDS instead.

13. Run the engine for more than 3 minutes, then check for oil leaks.

Engine Oil Filter Replacement

Special Tools Required
Oil filter wrench 07AAA-PLLA100

1. Remove the oil filter with the special oil filter wrench.

2. Inspect the filter to make sure the rubber seal is not stuck to the oil filter seating surface of the engine.

3. Inspect the threads (A) and rubber seal (B) on the new filter. Clean the seat on the engine block, then apply a light coat of new engine oil to the filter rubber seal. Use only filters with a built-in bypass system.

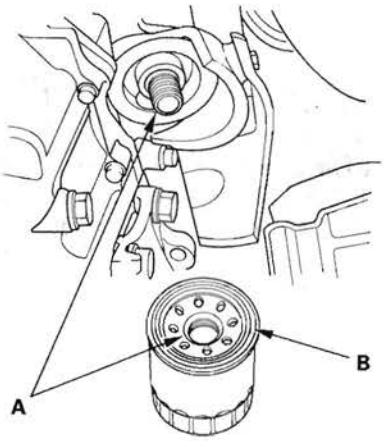

4. Install the oil filter by hand.

5. After the rubber seal seats, tighten the oil filter clockwise with the oil filter wrench

Tighten: **3/4 Turn Clockwise**
Tightening Torque: **12 N·m (1.2 kgf·m, 8.7 lbf·ft)**

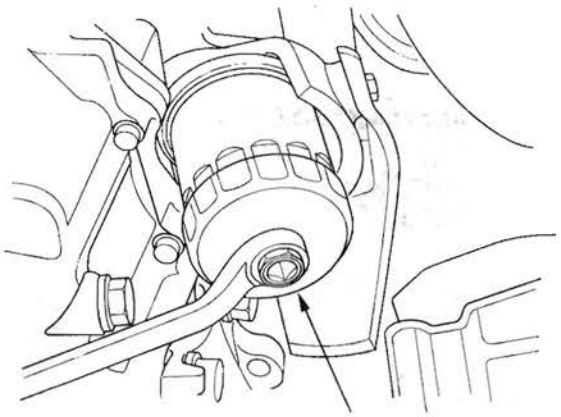

07AAA-PLLA100

6. If four numbers or marks (1 to 4 or ▼ to ▼▼▼▼) are printed around the outside of the filter, use the following procedure to tighten the filter.

   - Spin the filter on until its seal lightly seats against the block, and note which number or mark is at the bottom.
   - Tighten the filter by turning it clockwise three numbers or marks from the one you noted. For example, if number 2 is at the bottom when the seal is seated, tighten the filter until the number 1 comes around the bottom.

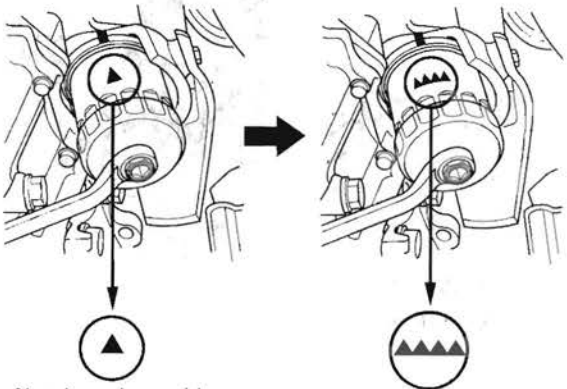

Number when rubber seal is seated.

Number after tightening.

Number or Mark when rubber seal is seated	1 or ▼	2 or ▼▼	3 or ▼▼▼	4 or ▼▼▼▼
Number or Mark after tightening	4 or ▼▼▼▼	1 or ▼	2 or ▼▼	3 or ▼▼▼

7. After installation, fill the engine with oil up to the specified level, run the engine for more than 3 minutes, then check for oil leakage.

Oil Filter Base Replacement

1. Remove the oil filter (see page 8-11).
2. Remove the oil filter base (A), then remove the oil filter cover (B).

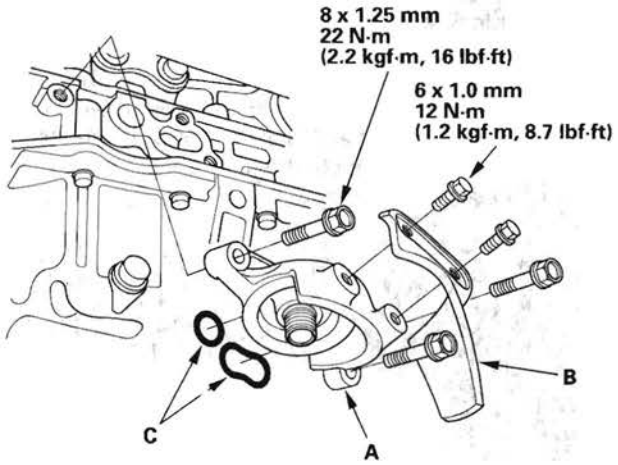

3. Clean the O-ring grooves and mating surface with the oil filter base.
4. Install the oil filter cover, then install the oil filter base with new O-rings (C).
5. Install the oil filter (see page 8-11).

Oil Filter Feed Pipe Replacement

1. Remove the oil filter base (see page 8-12).
2. Remove the oil filter holder.

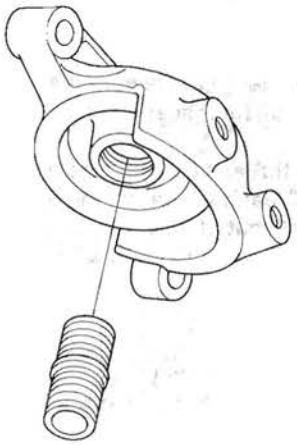

3. Install the two 20 x 1.5 mm nuts (A) onto the new oil filter feed pipe. Hold one nut with a wrench, then use a second wrench to tighten the other nut.

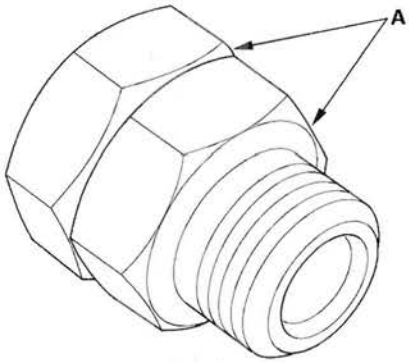

4. Tighten the oil filter feed pipe to the block to 49 N·m (5.0 kgf·m, 36 lbf·ft), then remove the nuts from the oil filter feed pipe.
5. Install the oil filter base (see page 8-12).

Engine Oil Gallery Cap Replacement

1. Remove the engine oil gallery cap (A).

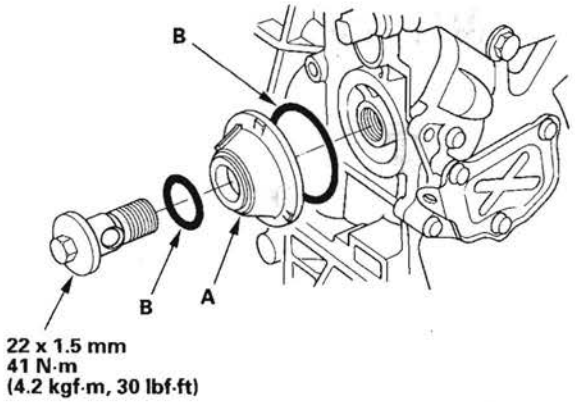

2. Clean the O-ring groove and mating surface with the engine oil gallery cap.

3. Install the engine oil gallery cap with new O-rings (B).

Oil Pump Overhaul

Exploded View

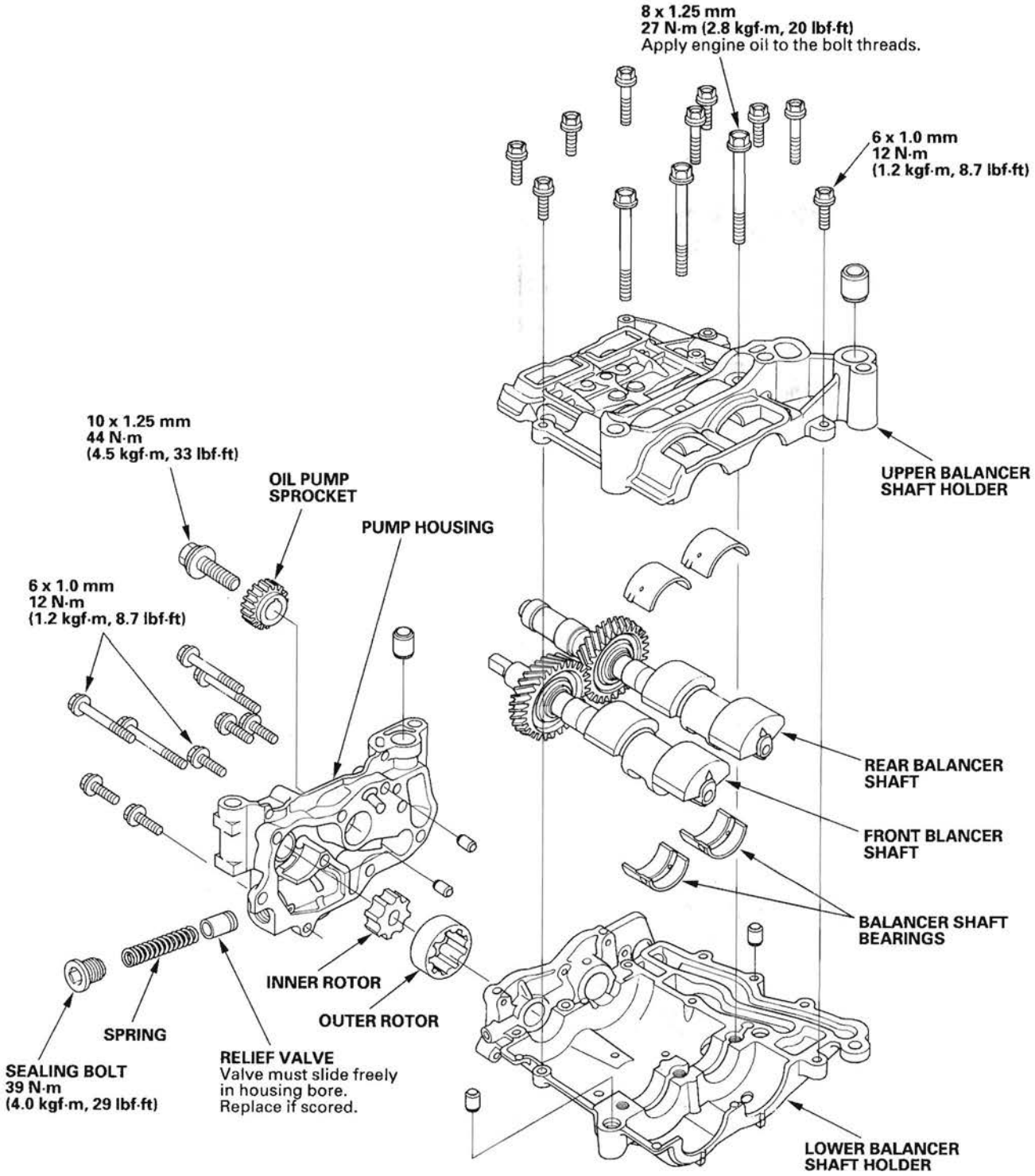

Oil Pump Removal

1. Turn the crankshaft pulley so its top dead center *(TDC) mark (A) lines up with the pointer (B).*

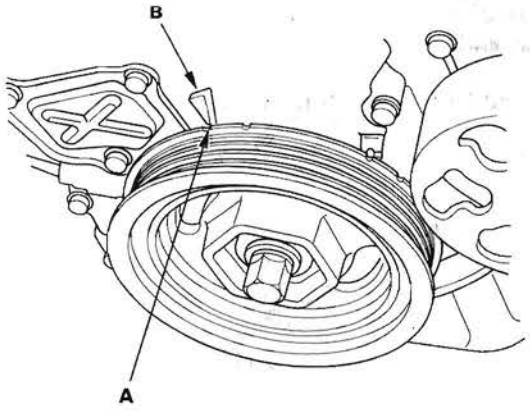

2. Remove the oil pan (see page 7-11).

3. Remove and discard the oil pump chain tensioner.

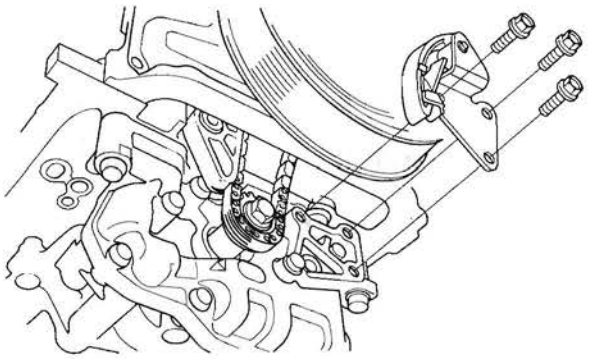

4. To hold the rear balancer shaft, insert a 6 mm pin driver (A) into the maintenance hole in the lower balancer shaft holder and through the rear balancer *shaft.*

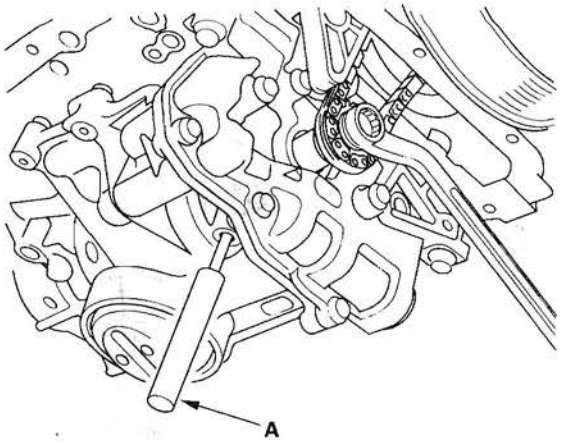

5. Loosen the oil pump sprocket mounting bolt.

6. Remove the oil pump sprocket (A), then remove the oil pump (B).

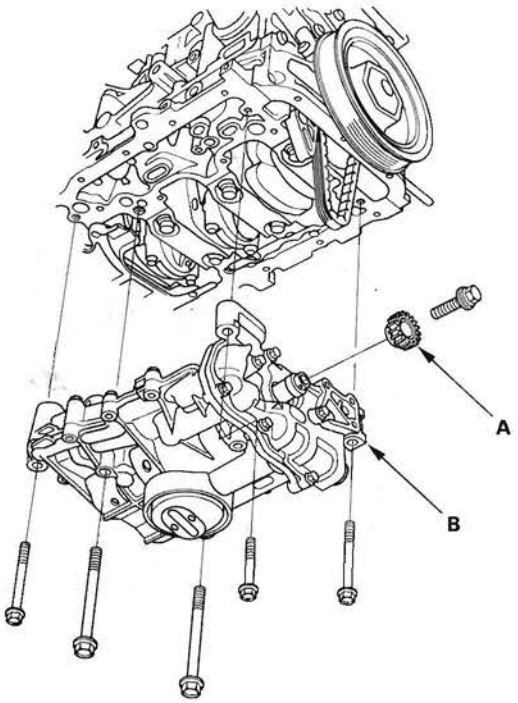

(cont'd)

Oil Pump Overhaul (cont'd)

Oil Pump Inspection

1. Remove the pump housing.

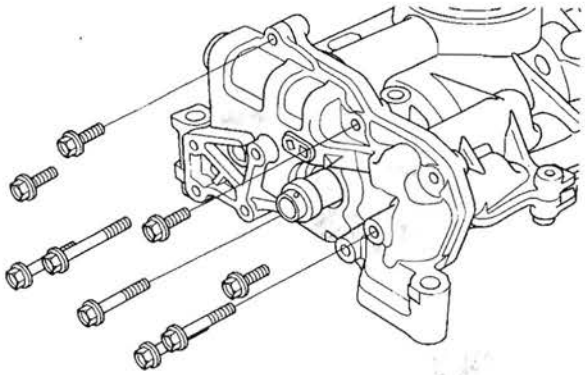

2. Check the inner-to-outer rotor radial clearance between the inner rotor (A) and outer rotor (B). If the inner-to-outer rotor radial clearance exceeds the service limit, replace the oil pump.

Inner Rotor-to-Outer Rotor Radial Clearance
Standard (New): 0.06—0.16 mm (0.002—0.006 in.)
Service Limit: 0.20 mm (0.008 in.)

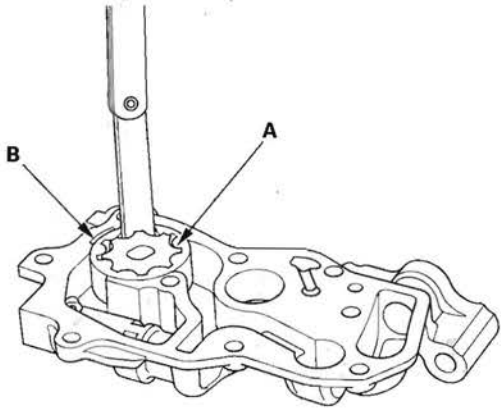

3. Check the housing-to-rotor axial clearance between the rotor (A) and pump housing (B). If the housing-to-rotor axial clearance exceeds the service limit, replace the oil pump.

Housing-to-Rotor Axial Clearance
Standard (New): 0.035—0.070 mm (0.0014—0.0028 in.)
Service Limit: 0.12 mm (0.005 in.)

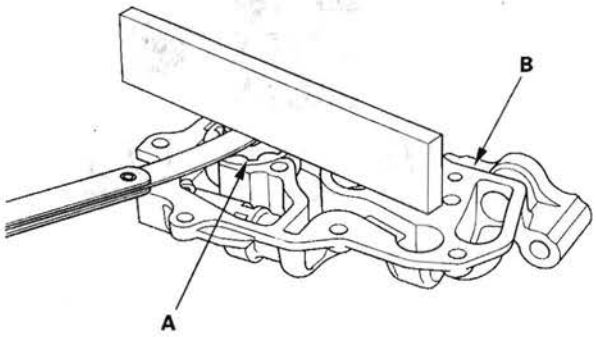

4. Check the housing-to-outer rotor radial clearance between the outer rotor (A) and pump housing (B). If the housing-to-outer rotor radial clearance exceeds the service limit, replace the oil pump.

Housing-to-Outer Rotor Radial Clearance
Standard (New): 0.15—0.21 mm (0.006—0.008 in.)
Service Limit: 0.23 mm (0.009 in.)

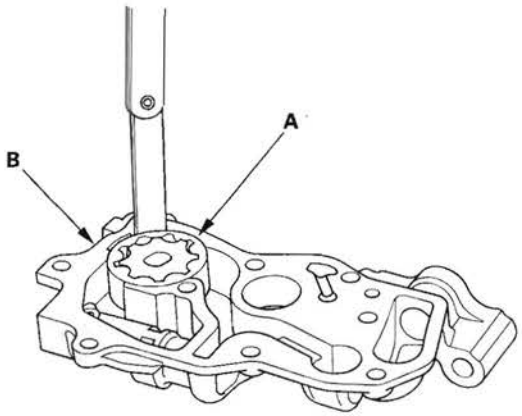

5. Inspect both rotors and the pump housing for scoring or other damage. Replace parts if necessary.

Balancer Shaft Inspection

1. Seat the balancer shaft by pushing it away from the oil pump sprocket end of the oil pump.

2. Zero the dial indicator against the end of the balancer shaft, then push the balancer shaft back and forth and read the end play.

Balancer Shaft End Play
Front Balancer Shaft:
Standard (New): 0.063—0.108 mm (0.0025—0.0043 in.)
Service Limit: 0.14 mm (0.0055 in.)
Rear Balancer Shaft:
Standard (New): 0.063—0.108 mm (0.0025—0.0043 in.)
Service Limit: 0.14 mm (0.0055 in.)

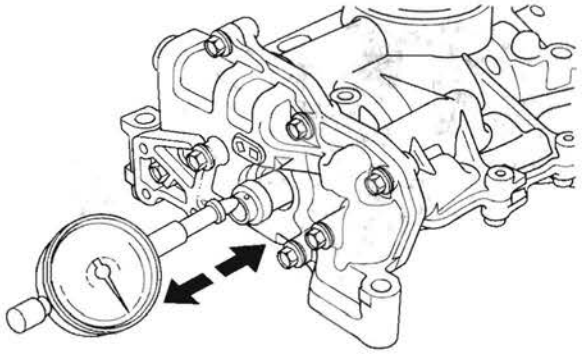

3. Remove the upper balancer shaft holder (with bearings) (A), then remove the front balancer shaft (B) and rear balancer shaft (C).

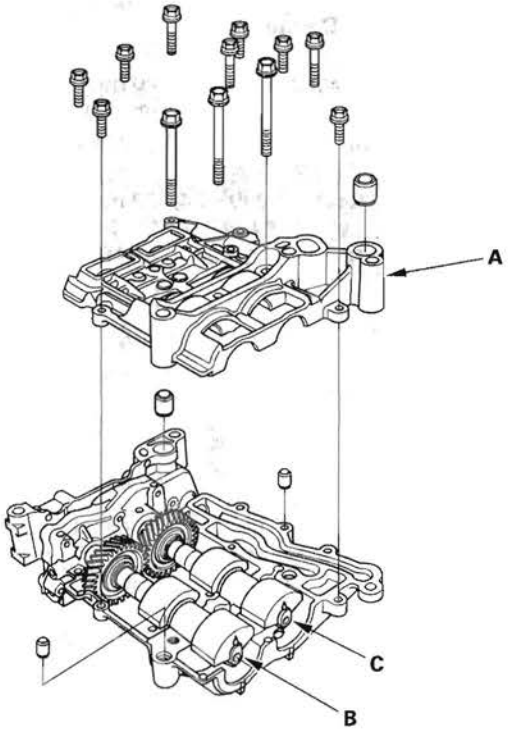

(cont'd)

Oil Pump Overhaul (cont'd)

4. Measure the inner diameter of the No. 1 bearing for the front balancer shaft hole and the rear balancer shaft hole.

Bearing Inner Diameter
Front:
Standard (New): 20.000—20.020 mm (0.7874—0.7882 in.)
Service Limit: 20.03 mm (0.789 in.)
Rear:
Standard (New): 24.000—24.020 mm (0.9449—0.9457 in.)
Service Limit: 24.03 mm (0.946 in.)

Front

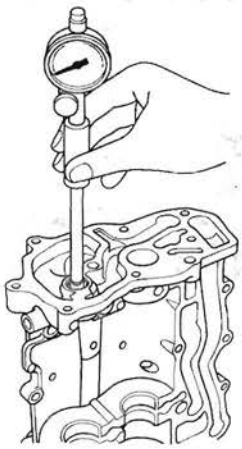

Rear

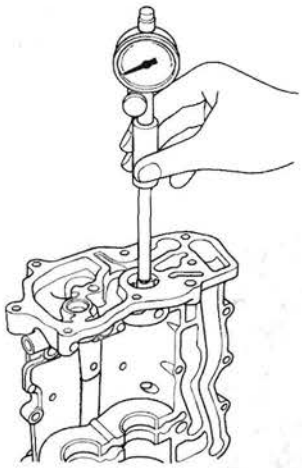

5. Measure the diameters of the No. 1 journals on the front balancer shaft and rear balancer shaft.

Journal Diameter
Front:
Standard (New): 19.938—19.950 mm (0.7850—0.7854 in.)
Service Limit: 19.92 mm (0.784 in.)
Rear:
Standard (New): 23.938—23.950 mm (0.9424—0.9429 in.)
Service Limit: 23.92 mm (0.942 in.)

Front

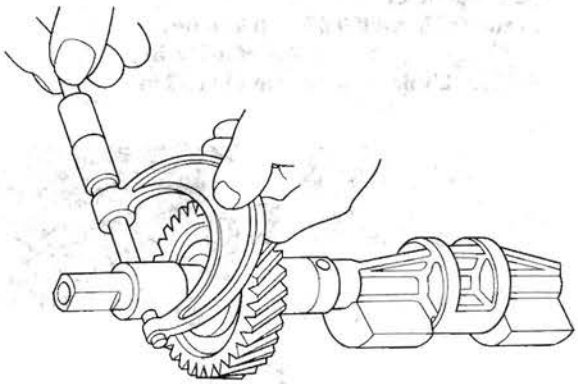

Rear

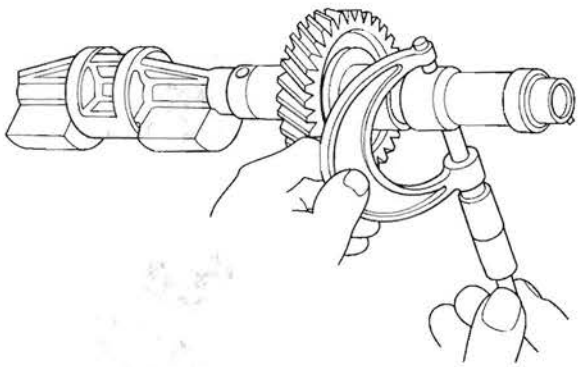

6. Clean both balancer shaft No. 2 journals and bearing halves with a clean shop towel.

7. Place one strip of plastigage across each No. 2 journal.

8. Reinstall the bearings and upper balancer shaft holder, then torque the bolts.

   NOTE: Do not rotate the balancer shafts during inspection.

9. Remove the upper balancer shaft holder and bearings again, and measure the widest part with the plastigage. If the balancer shaft No. 2 journal oil clearance is out-of-tolerance, install new bearings, and recheck. If it is still out-of-tolerance, replace the balancer shafts.

   No. 2 Journal Oil Clearance
   Standard (New): 0.060—0.120 mm (0.0024—0.0047 in.)
   Service Limit: 0.15 mm (0.006 in.)

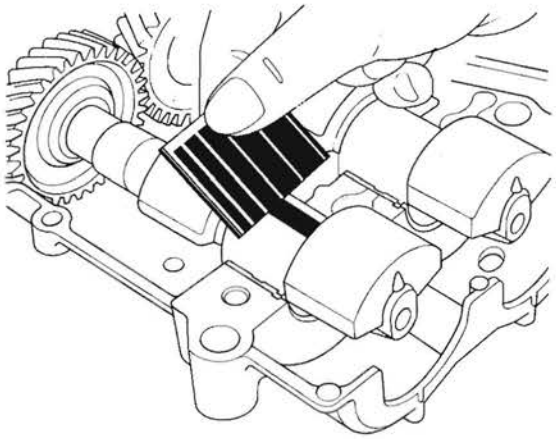

10. Align the punch mark on the rear balancer shaft in the center of the two punch marks on the front balancer shaft, then install the balancer shafts on the lower balancer shaft holder.

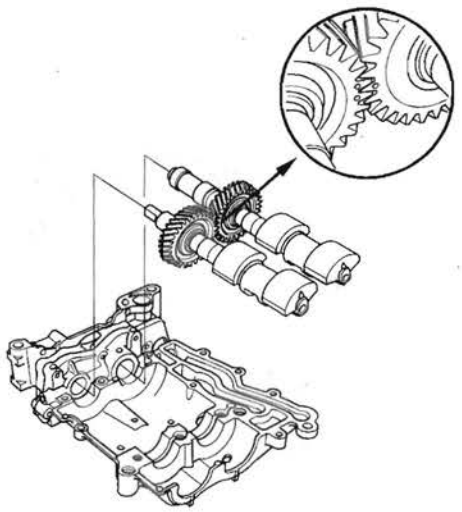

11. Apply engine oil to the threads of the 8 mm bolts (A).

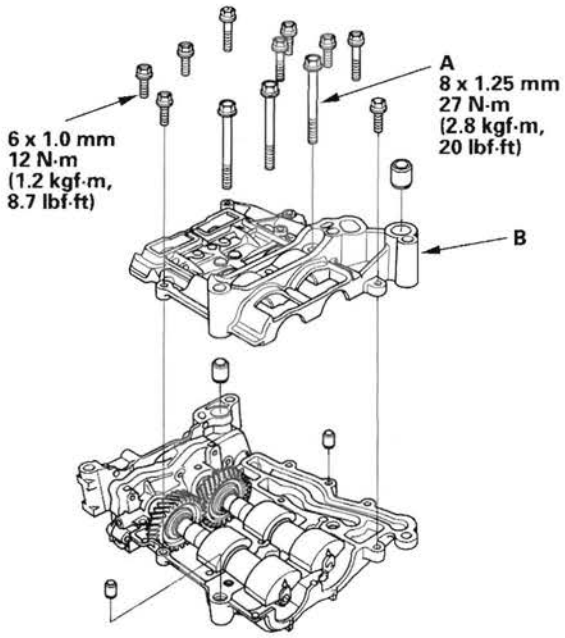

12. Install the upper balancer shaft holder (B).

(cont'd)

Oil Pump Overhaul (cont'd)

13. Install the pump housing.

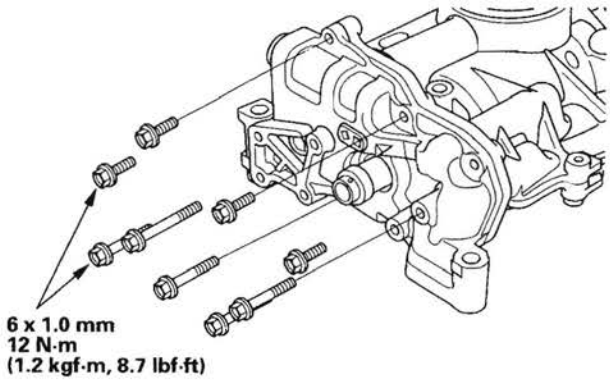

Oil Pump Installation

1. Make sure the No. 1 piston top dead center (TDC) mark (A) lines up with the pointer (B).

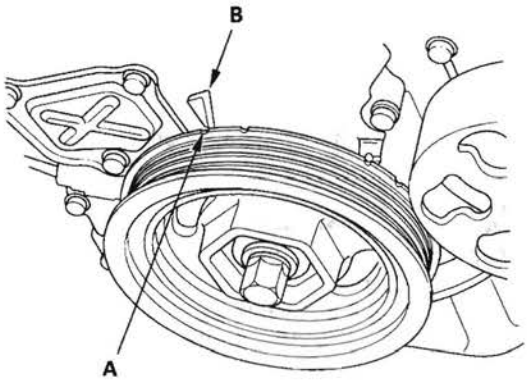

2. Align the dowel pin (A) on the rear balancer shaft with the mark (B) on the oil pump.

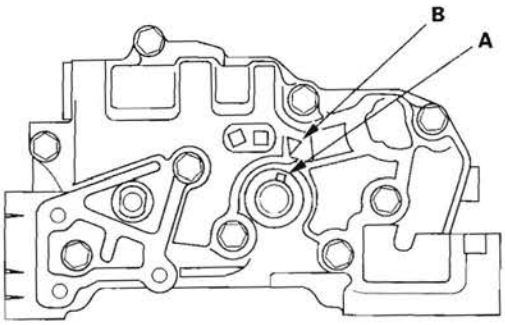

3. To hold the rear balancer shaft, insert a 6 mm pin driver (A) into the maintenance hole in the lower balancer shaft holder and through the rear balancer shaft.

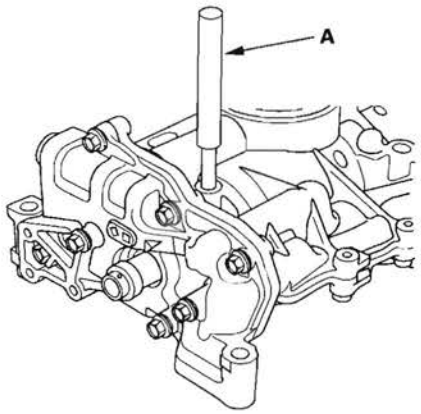

4. Apply engine oil to the threads of the oil pump mounting bolts (A).

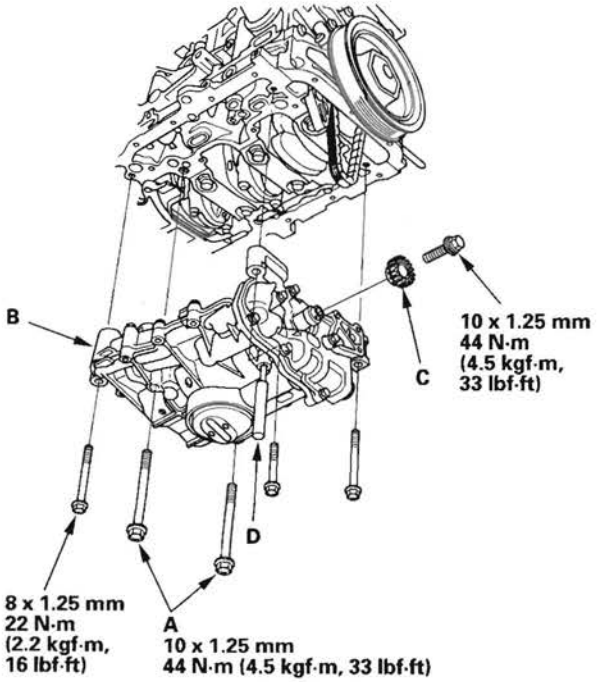

5. Loosely install the oil pump (B), then install the oil pump sprocket (C).

6. Remove the 6 mm pin driver (D).

7. Tighten the oil pump mounting bolts.

8. Squeeze the new oil pump chain tensioner (A), then install the set clip (B) on it as shown.

NOTE: The set clip is supplied with the oil pump chain tensioner.

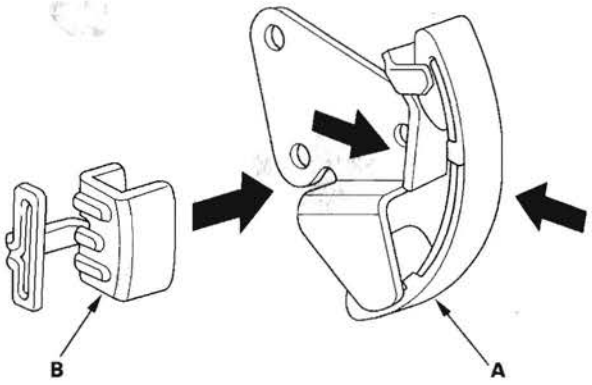

9. Install the new oil pump chain tensioner.

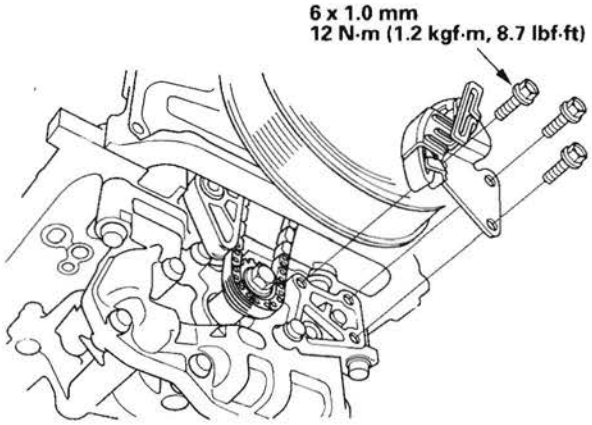

(cont'd)

Oil Pump Overhaul (cont'd)

10. Remove the set clip from the oil pump chain tensioner.

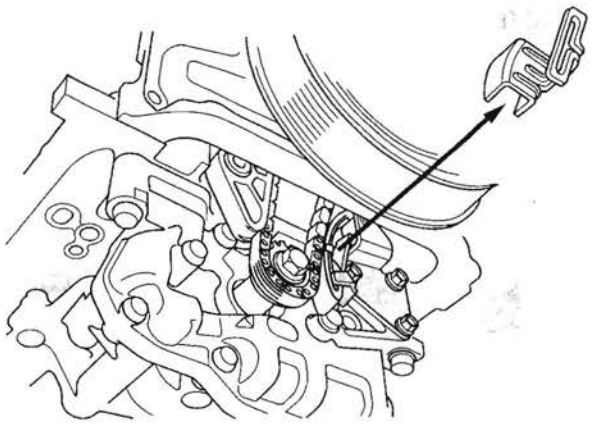

11. Install the oil pan (see page 7-29).

Engine Mechanical



Intake Manifold and Exhaust System

Intake Manifold Removal and Installation 9-2
Exhaust Manifold Removal and Installation 9-8
Exhaust Pipe and Muffler Replacement 9-9

Intake Manifold Removal and Installation

Exploded View

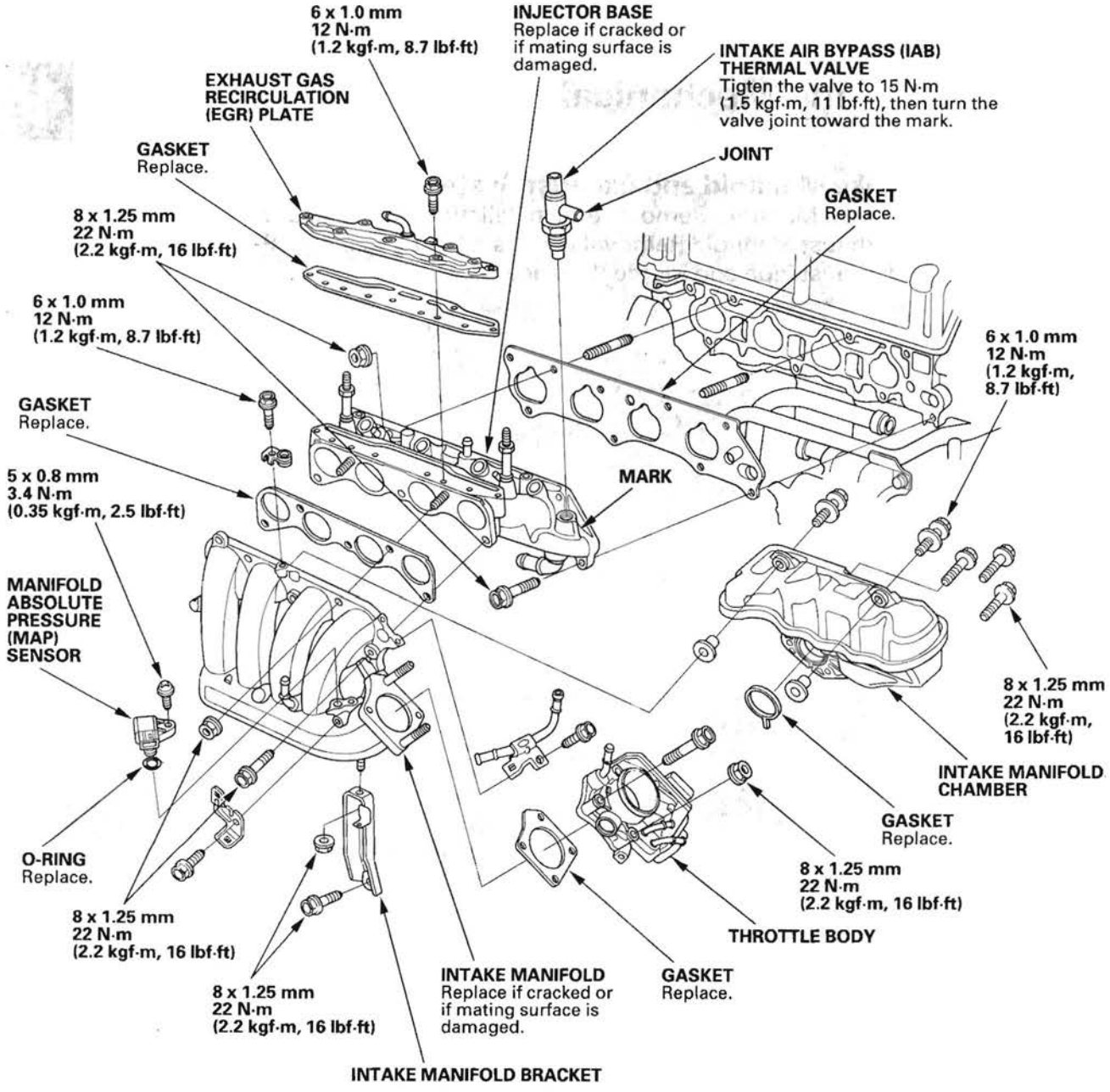

Removal

1. Remove the hood support rod, then use it as shown to prop the hood in the wide-open position.

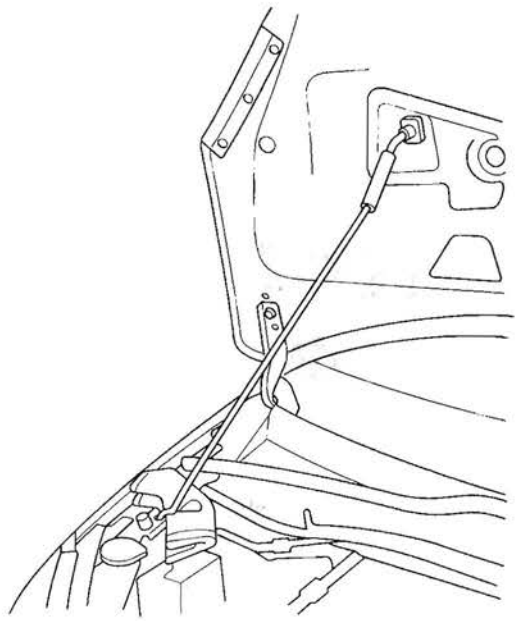

2. Remove the bulkhead cover (see page 20-149).

3. Disconnect the fan motor connectors (A) and hood switch connector (B), then remove the harness clips (C).

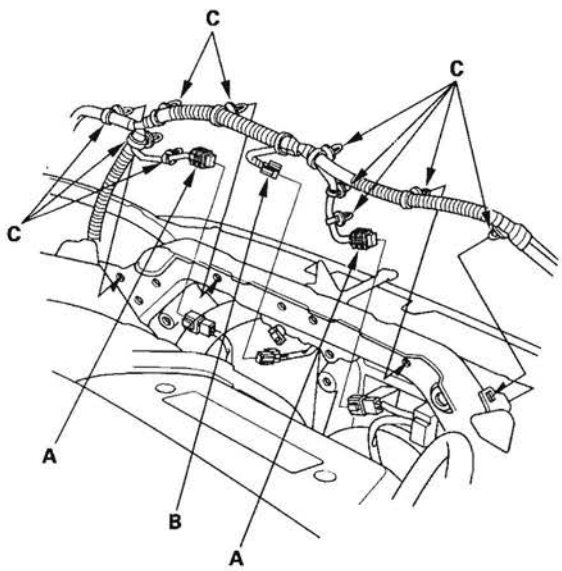

4. Remove the radiator upper brackets (A), then remove the front bulkhead (B).

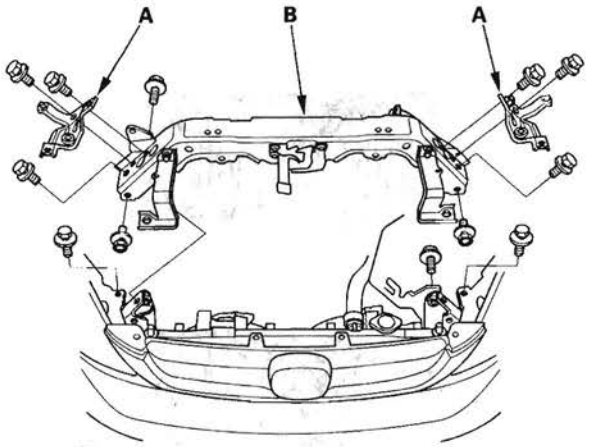

5. Remove the intake manifold cover.

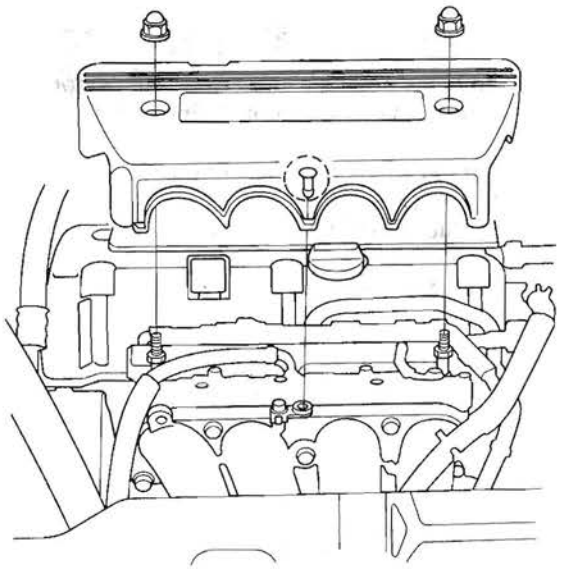

(cont'd)

Intake Manifold Removal and Installation (cont'd)

6. Remove the vacuum hose (A) and breather pipe (B), then remove the intake air duct (C).

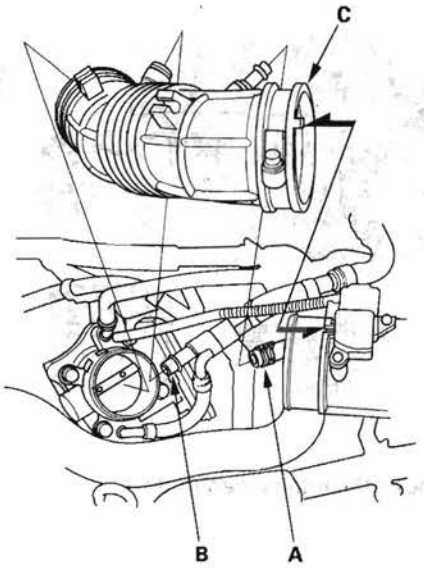

7. Remove the engine wire harness connectors and wire harness clamps from the intake manifold.
   - Manifold absolute pressure (MAP) sensor connector
   - Throttle actuator connector

8. Remove the evaporative emission (EVAP) canister hose (A) and brake booster vacuum hose (B).

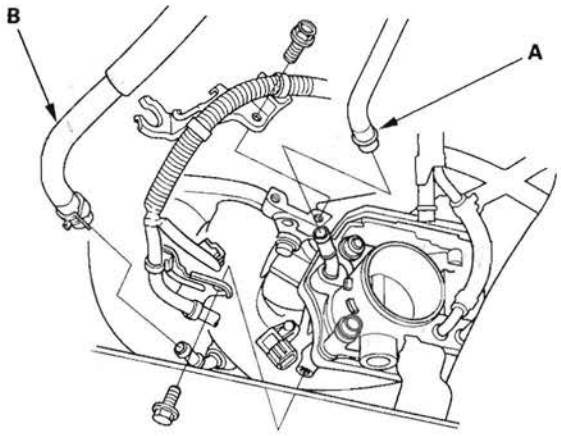

9. Remove the harness bracket mounting bolts.

10. Remove the water bypass hoses, then plug the water bypass hoses.

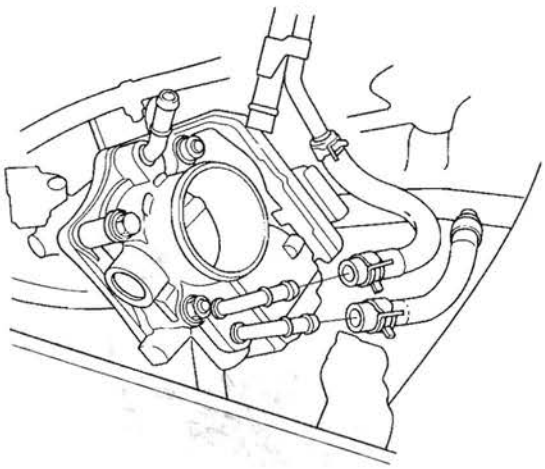

11. Raise the vehicle on the lift to full height.

12. Remove the splash shield.

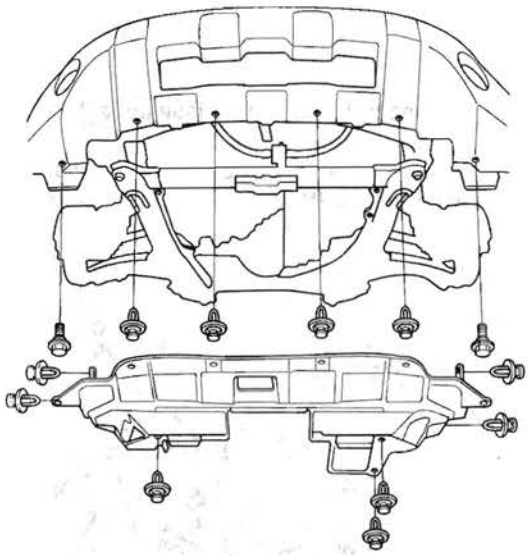

13. Remove the connector (A), then remove the intake manifold bracket (B).

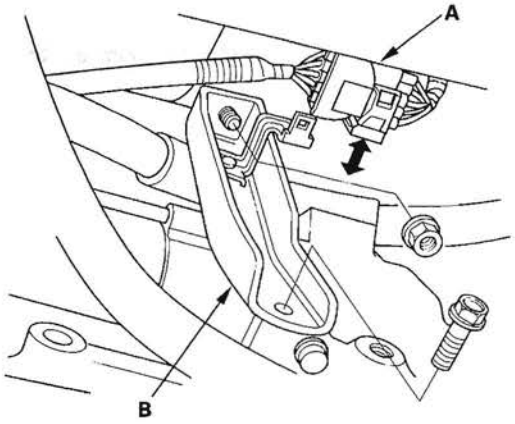

14. Lower the vehicle on the lift.

15. Remove the intake manifold.

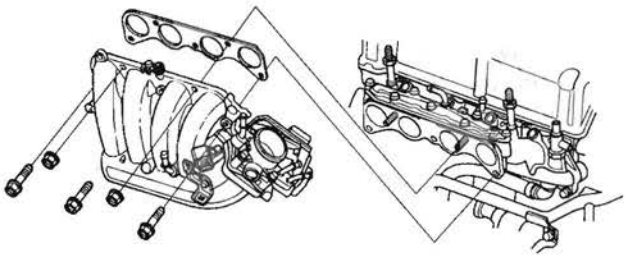

Installation

1. Install the intake manifold (A) with a new gasket (B), and tighten the bolts and nuts in a crisscross pattern in two or three steps, beginning with the inner bolt.

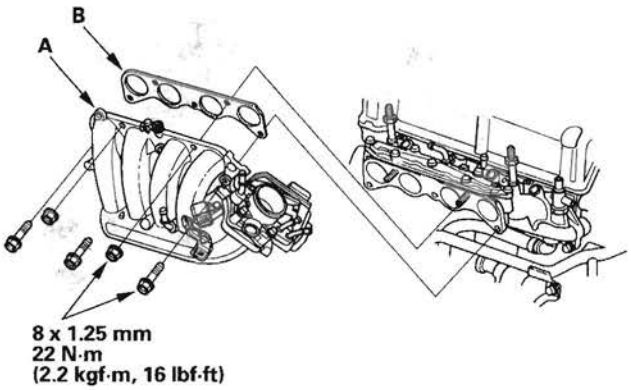

2. Raise the vehicle on the lift to full height.

3. Install the intake manifold bracket (A), then install the connector (B).

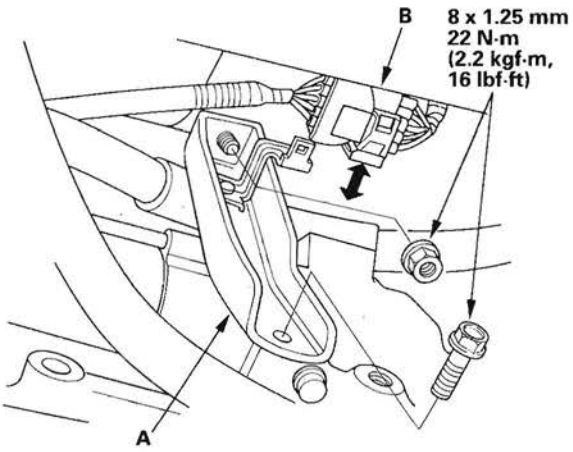

(cont'd)

Intake Manifold Removal and Installation (cont'd)

4. Install the splash shield.

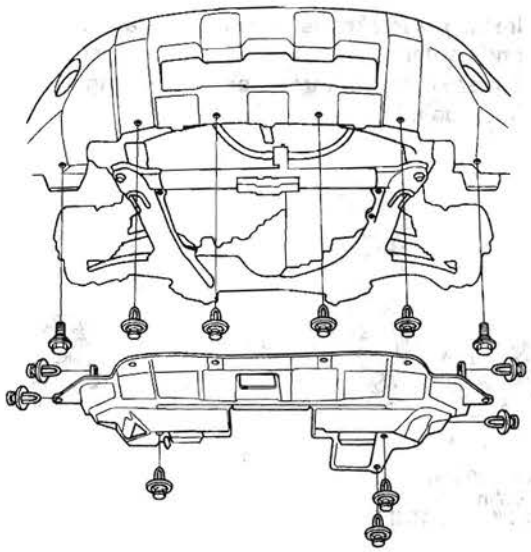

5. Lower the vehicle on the lift.

6. Install the water bypass hoses.

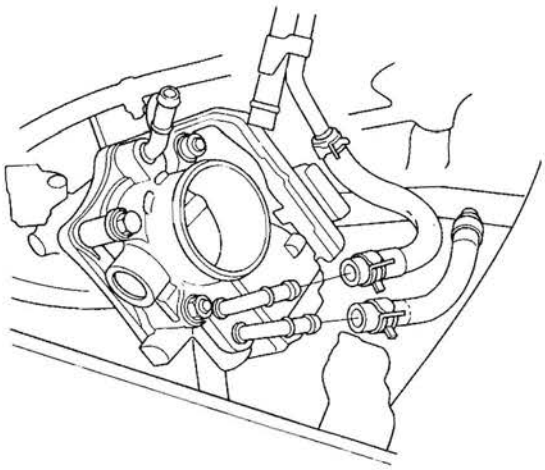

7. Install the EVAP canister hose (A) and brake booster vacuum hose (B).

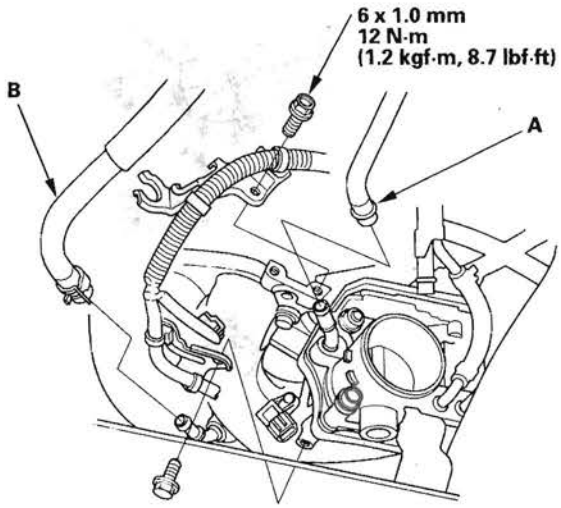

8. Install the harness bracket mounting bolts.

9. Connect the engine wire harness connectors, and install the wire harness clamps to the intake manifold.

   - MAP sensor connector
   - Throttle actuator connector

10. Install the intake air duct (A), then install the vacuum hose (B) and breather pipe (C).

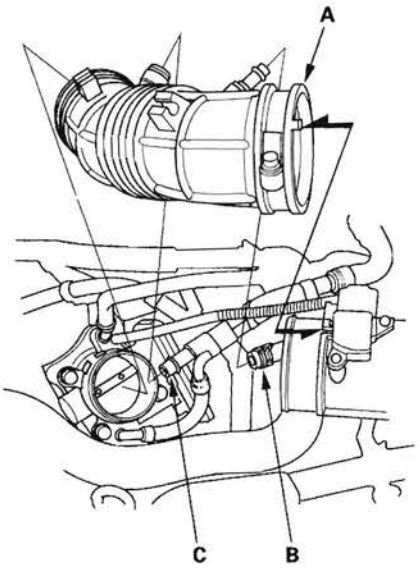

11. Install the intake manifold cover.

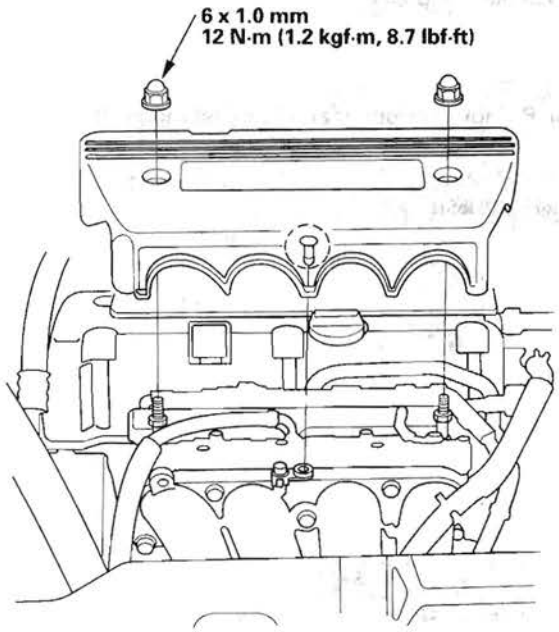

12. Install the front bulkhead (A), then install the radiator upper brackets (B).

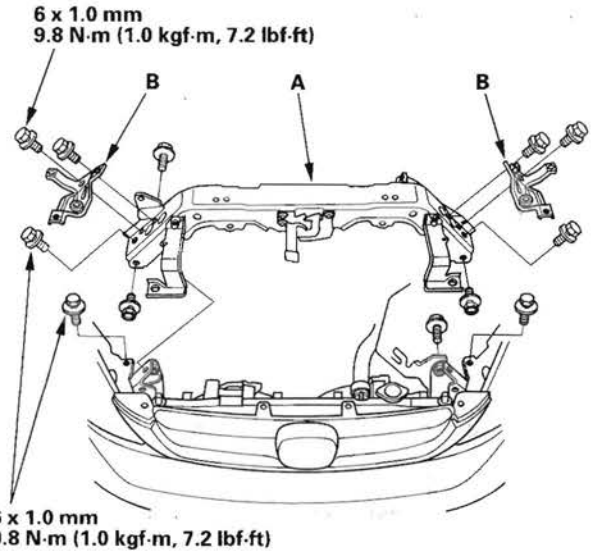

13. Apply body paint to the bulkhead mounting bolts.

14. Connect the fan motor connectors (A) and hood switch connector (B), then install the harness clips (C).

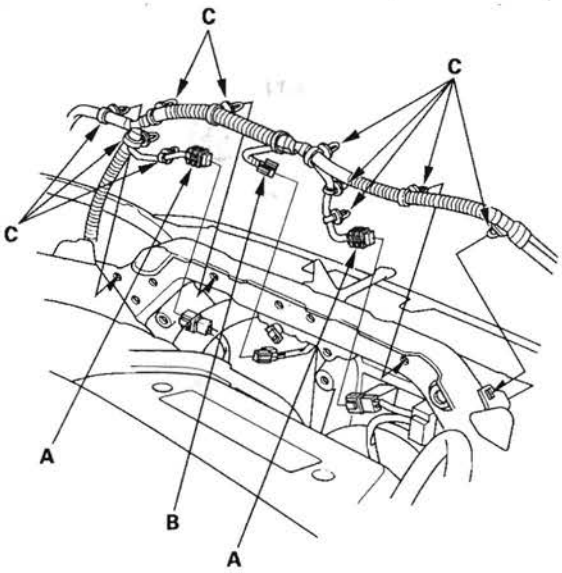

15. Install the bulkhead cover (see page 20-149).

16. Clean up any spilled engine coolant.

17. After installation, check that all tubes, hoses, and connectors are installed correctly.

18. Refill the radiator with engine coolant, and bleed the air from the cooling system with the heater valve open (see step 6 on page 10-6).

Exhaust Manifold Removal and Installation

1. Disconnect the air fuel ratio (A/F) sensor connector and secondary heated oxygen sensor (secondary HO2S) connector, then remove the three way catalytic converter (TWC) (see step 25 on page 5-6).

2. Remove the under-cowl cover (see page 20-167), then remove the strut brace (see page 20-159).

3. Remove the rocker arm oil control solenoid (see page 11-286). Remove the cover and exhaust manifold bracket, then remove the exhaust manifold.

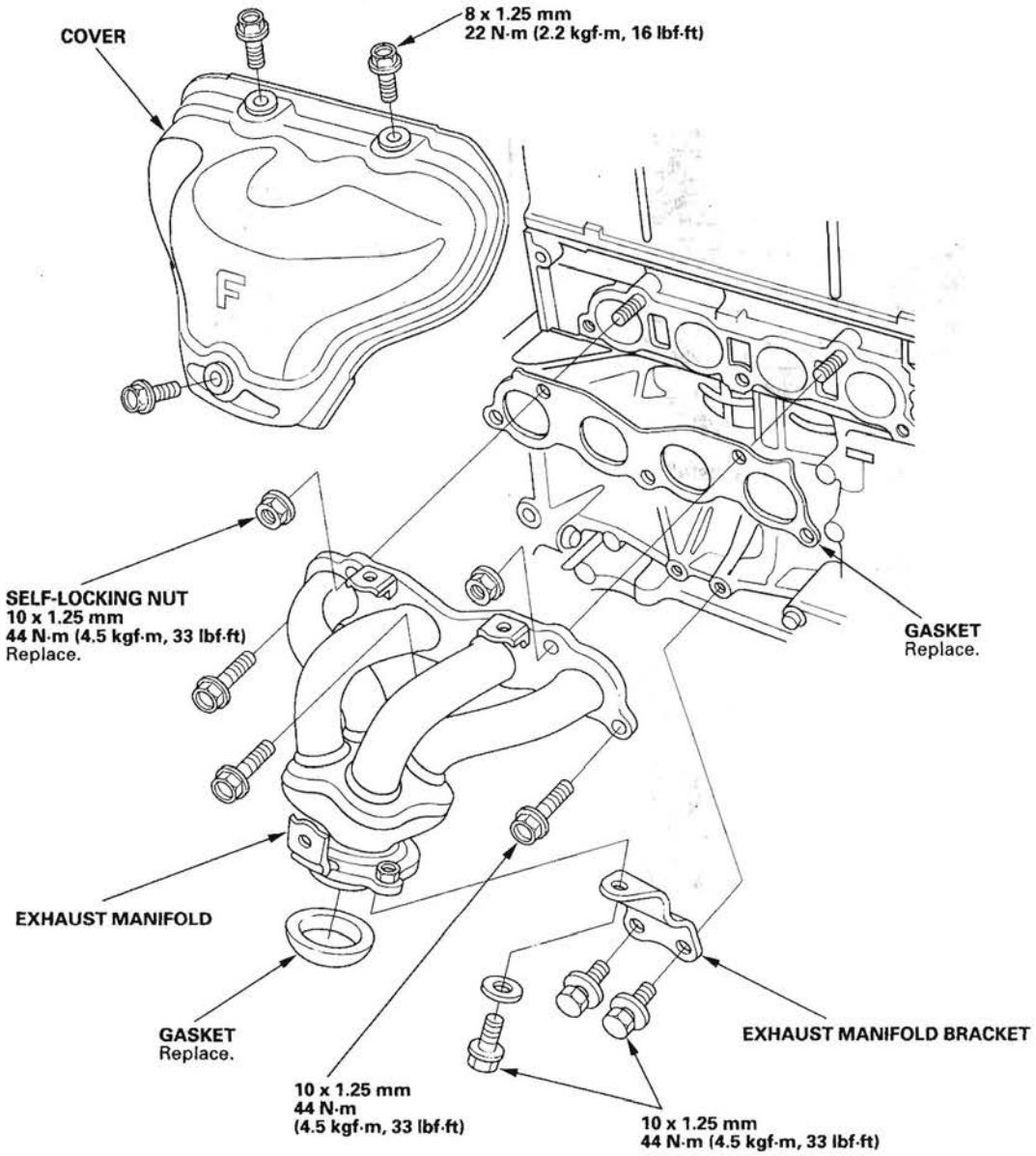

4. Install the exhaust manifold, and tighten the bolts and nuts in a crisscross pattern in two or three steps, beginning with the inner nut.

5. Install the other parts in the reverse order of removal.

Exhaust Pipe and Muffler Replacement

NOTE: Use new gaskets and self-locking nuts when reassembling.

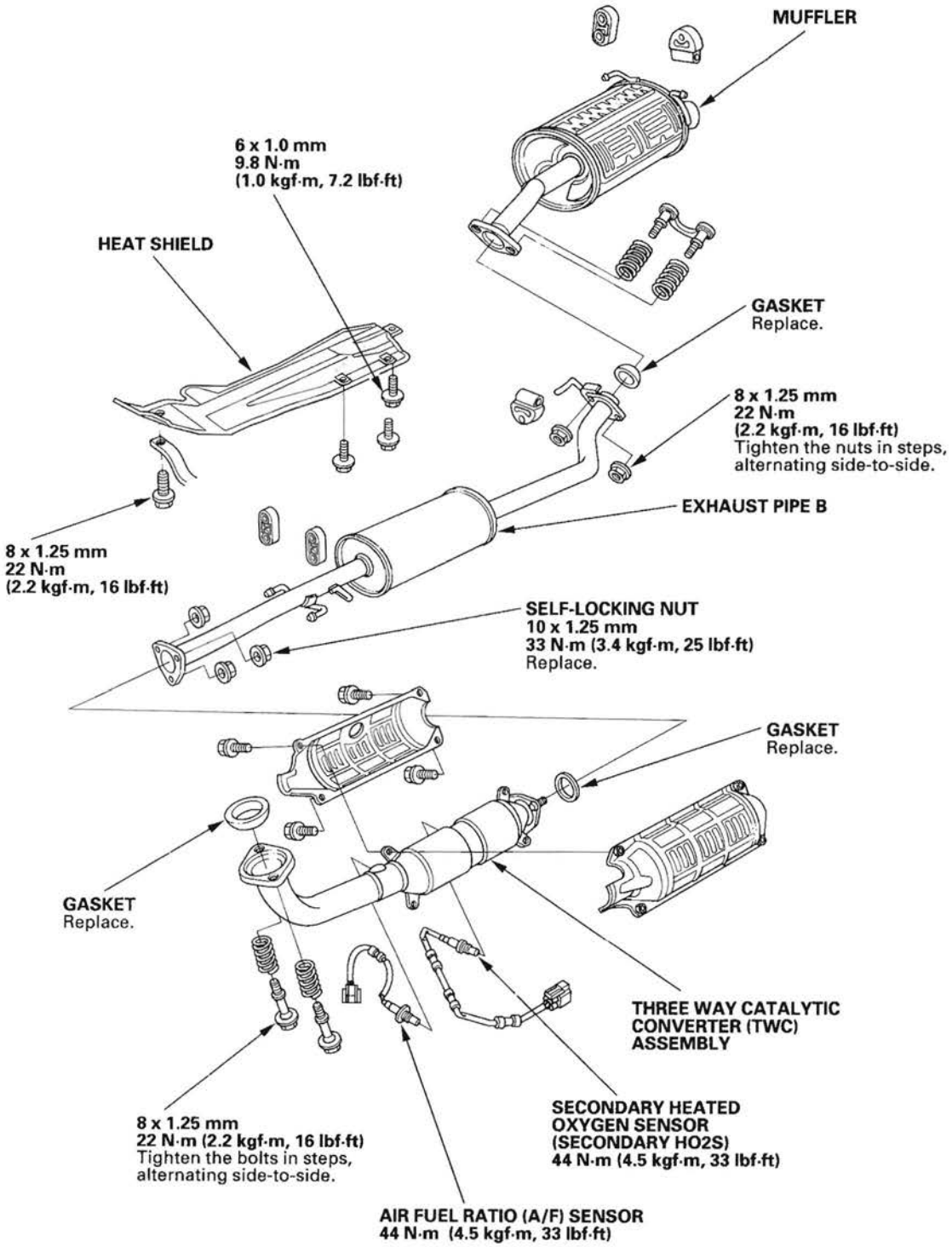

Engine Cooling

Cooling System

Component Location Index 10-2
Radiator Cap Test 10-3
Radiator Test 10-3
Fan Motor Test 10-4
Thermostat Test 10-4
Water Pump Inspection 10-5
Water Pump Replacement 10-5
Coolant Check 10-6
Coolant Replacement 10-6
Thermostat Replacement 10-8
Water Passage Replacement 10-9
EGR Passage Removal and Installation 10-12
Fan, Fan Motor, Shroud Removal and Installation 10-15
Radiator Replacement 10-18

Fan Controls

Component Location Index 10-26
Symptom Troubleshooting Index 10-27
Circuit Diagram 10-28
Radiator Fan High Speed Circuit Troubleshooting ... 10-29

Component Location Index

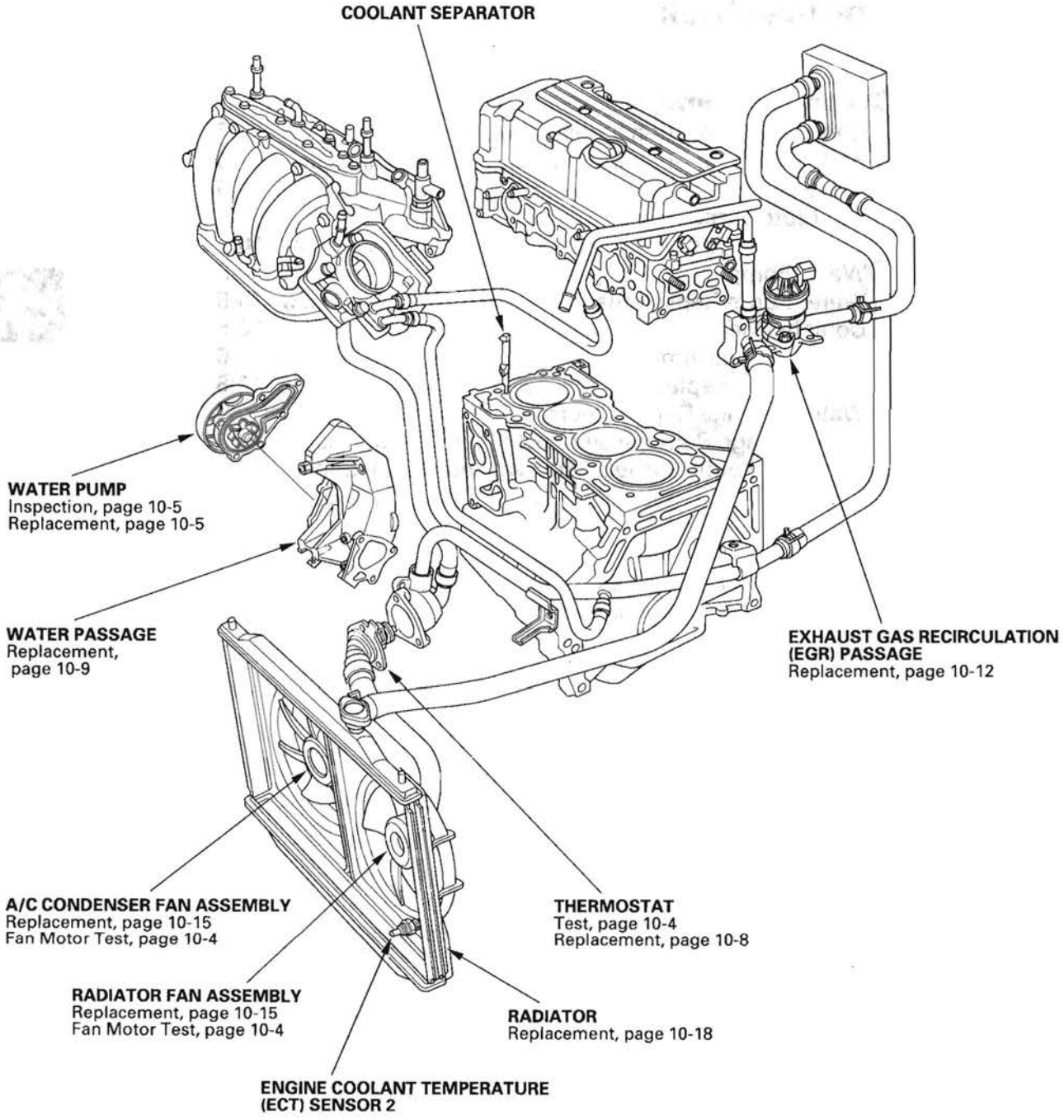

Radiator Cap Test

1. Remove the radiator cap (A), wet the seal with engine coolant, then install it on the pressure tester (B) (commercially available).

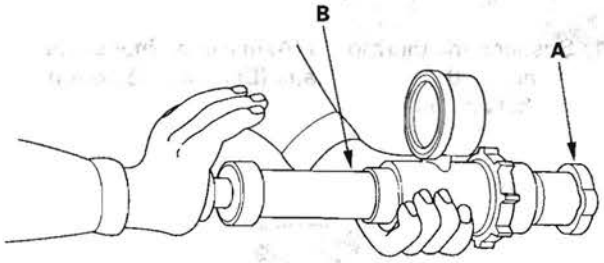

2. Apply a pressure of 93—123 kPa (0.95—1.25 kgf/cm², 14—18 psi).
3. Check for a drop in pressure.
4. If the pressure drops, replace the cap.

Radiator Test

1. Wait until the engine is cool, then carefully remove the radiator cap and fill the radiator with engine coolant to the top of the filler neck.
2. Attach the pressure tester (A) (commercially available) to the radiator.

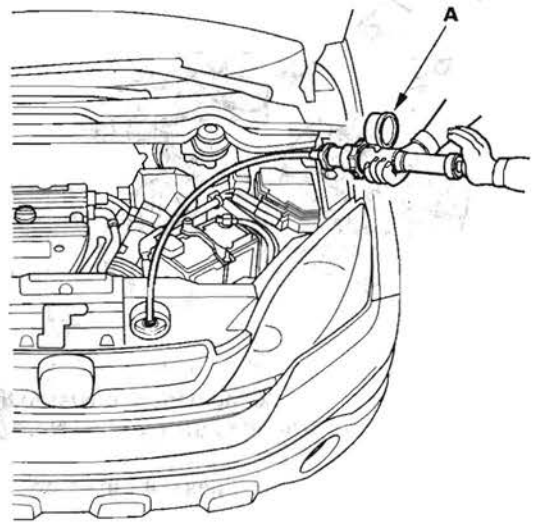

3. Apply a pressure of 93—123 kPa (0.95—1.25 kgf/cm², 14—18 psi).
4. Inspect for engine coolant leaks, and a drop in pressure.
5. Remove the tester, and reinstall the radiator cap.
6. Check for engine oil in the coolant and/or coolant in the engine oil.

Fan Motor Test

1. Disconnect the 2P connectors from the radiator fan motor and condenser fan motor.

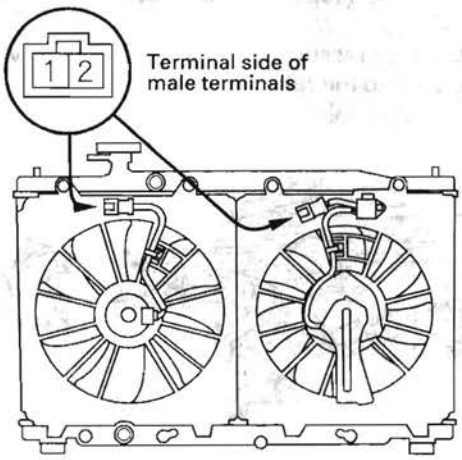

2. Test the motor by connecting battery power to the terminal No. 2 and ground to the terminal No. 1.
3. If the motor fails to run, or does not run smoothly, replace it.

Thermostat Test

Replace the thermostat if it is open at room temperature.

To test a closed thermostat:

1. Suspend the thermostat (A) in a container of water. Do not let the thermometer (B) touch the bottom of the hot container.

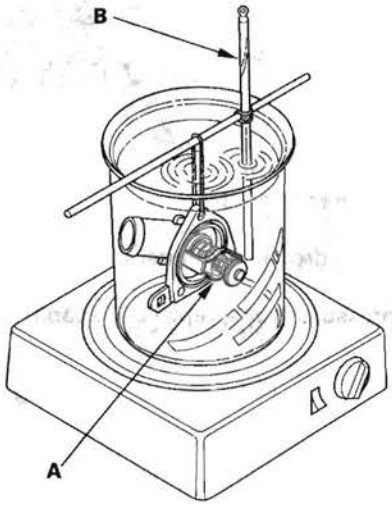

2. Heat the water, and check the temperature with a thermometer. Check the temperature where the thermostat first opens, and where it is fully open.
3. Measure the lift height of the thermostat when it is fully open.

Standard Thermostat

Lift Height:	**Above 8.0 mm (0.31 in.)**
Starts Opening:	**169—176 °F (76—80 °C)**
Fully Open:	**194 °F (90 °C)**

Water Pump Inspection

1. Remove the drive belt (see page 4-29).
2. Turn the water pump pulley counterclockwise. Check that it turns freely. If it doesn't, replace the water pump (see page 10-5).

   NOTE: When you check the water pump, you may see a small amount of "weeping" from the bleed holes (A). This is normal.

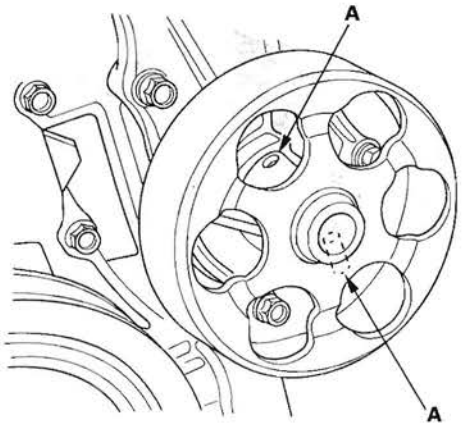

3. Install the drive belt (see page 4-29).

Water Pump Replacement

1. Remove the drive belt (see page 4-29).
2. Drain the engine coolant (see page 10-6).
3. Remove the drive belt auto-tensioner pulley (see page 4-31).
4. Remove the six bolts securing the water pump, then remove the water pump (A).

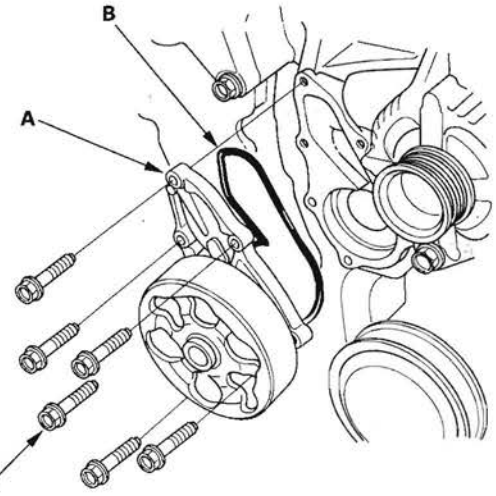

5. Inspect and clean the O-ring groove and mating surface with the water passage.
6. Install the water pump with new O-ring (B) in the reverse order of removal.
7. Clean up any spilled engine coolant.
8. Install the drive belt auto-tensioner pulley (see page 4-31).
9. Refill the radiator with engine coolant, and bleed the air from the cooling system with the heater valve open (see step 6 on page 10-6).

Coolant Check

1. Look at the coolant level in the coolant reservoir. Make sure it is between the MAX mark (A) and MIN mark (B).

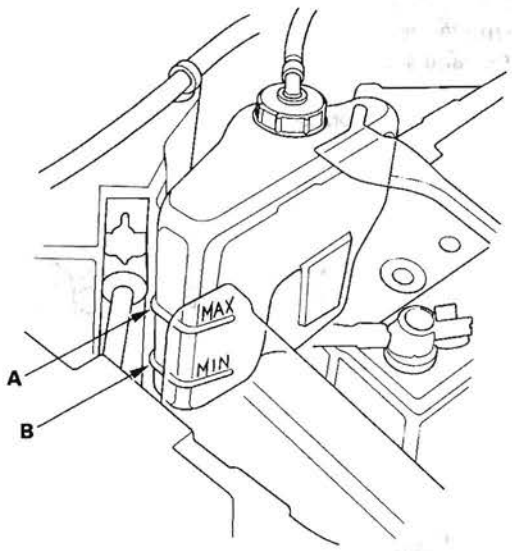

2. If the coolant level in the coolant reservoir is at or below the MIN mark, add coolant to bring it up to the MAX mark, and inspect the cooling system for leaks.

Coolant Replacement

1. Start the engine. Set the heater temperature control dial to maximum heat, then turn off the ignition switch. Make sure the engine and radiator are cool to the touch.
2. Remove the radiator cap.
3. Loosen the drain plug (A), and drain the coolant.



4. After the coolant has drained, tighten the radiator drain plug.
5. Remove the coolant reservoir, and drain the coolant, then reinstall the coolant reservoir.
6. Fill the coolant reservoir to the MAX mark (A) with Honda Long Life Antifreeze/Coolant Type 2 (P/N OL999-9001).

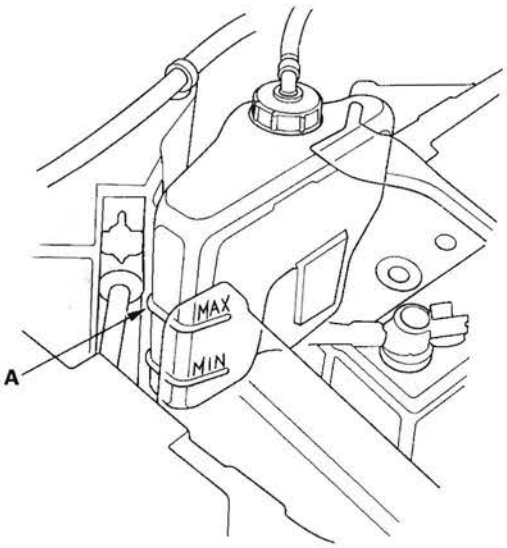

7. Pour Honda Long Life Antifreeze/Coolant Type 2 (P/N OL999-9001) into the radiator up to the base of the filler neck.

   NOTE:
   - Always use Honda Long Life Antifreeze/Coolant Type 2 (P/N OL999-9001). Using a non-Honda coolant can result in corrosion, causing the cooling system to malfunction or fail.
   - Honda Long Life Antifreeze/Coolant Type 2 is a mixture of 50 % antifreeze and 50 % water. Do not add water.

   Engine Coolant Capacities (Including the coolant reservoir capacity of 0.6 L (0.16 US gal))
   At Coolant Change:
   5.0 L (1.32 US gal)
   After Engine Overhaul:
   7.1 L (1.88 US gal)

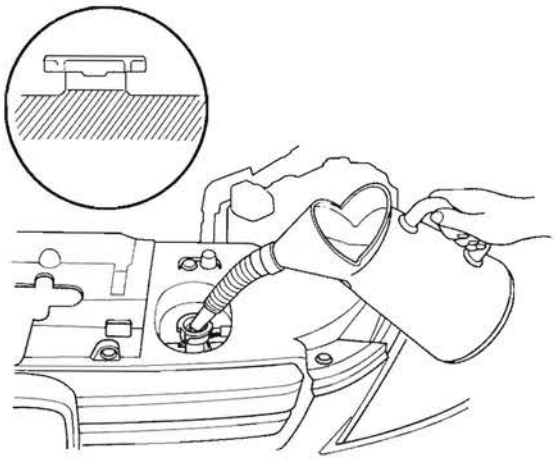

8. Loosely install the radiator cap.

9. Start the engine, and let it run until it warms up (the radiator fan comes on at least twice).

10. Turn off the engine. Check the level in the radiator and add Honda Long Life Antifreeze/Coolant Type 2 if needed.

11. Put the radiator cap on tightly, then run the engine again, and check for leaks.

12. Clean up any spilled engine coolant.

Thermostat Replacement

1. Drain the engine coolant (see page 10-6).
2. Remove the splash shield (see step 21 on page 5-5).
3. Remove the lower hose, then remove the thermostat.

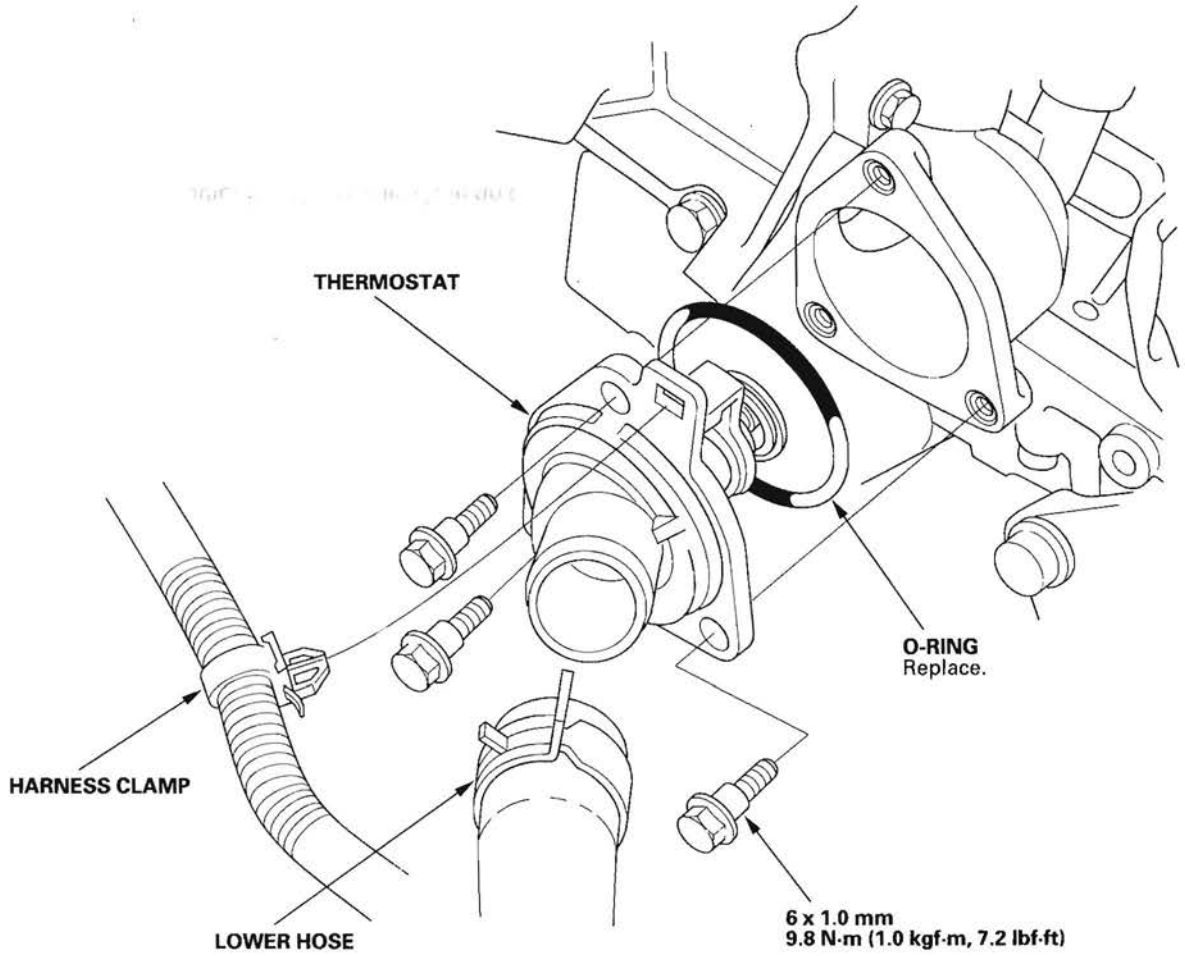

4. Install the thermostat with a new O-ring, then install the lower hose.
5. Install the splash shield (see step 34 on page 5-18).
6. Refill the radiator with engine coolant, and bleed the air from the cooling system with the heater valve open (see step 6 on page 10-6).

Water Passage Replacement

1. Drain the engine coolant (see page 10-6).
2. Remove the alternator (see page 4-32).
3. Remove the condenser fan shroud assembly.
4. Remove the A/C compressor without disconnecting the A/C hoses (see step 34 on page 5-7).
5. Remove the intake manifold (see page 9-3).
6. Remove the bolt (A) securing the connecting pipe.

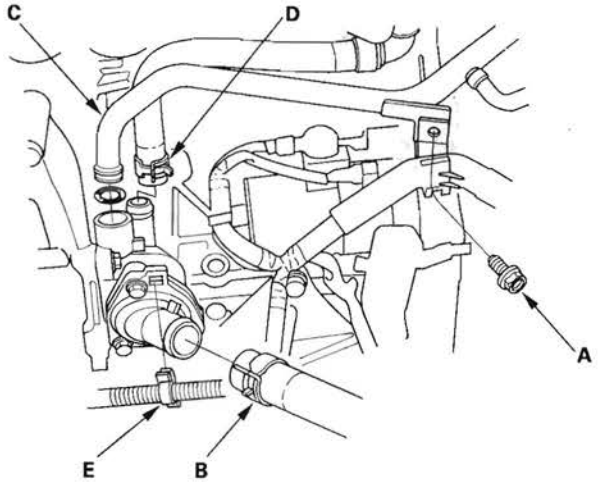

7. Remove the lower radiator hose (B), connecting pipe (C), water bypass hose (D), and harness clamp (E).
8. Remove the positive crankcase ventilation (PCV) hose (A), then remove the water passage (B).

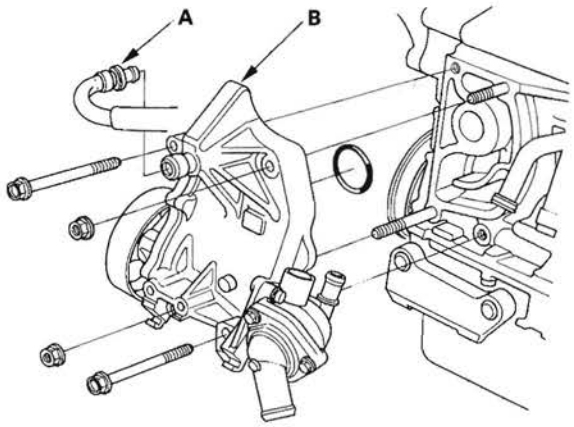

9. Remove the thermostat housing.

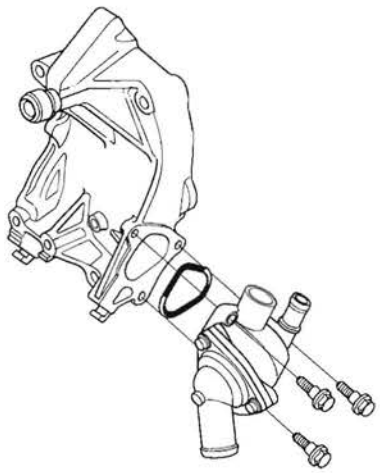

10. Remove the water pump (see page 10-5).

(cont'd)

Water Passage Replacement (cont'd)

11. Install the water pump (see page 10-5).

12. Install the thermostat housing (A) with a new O-ring (B).

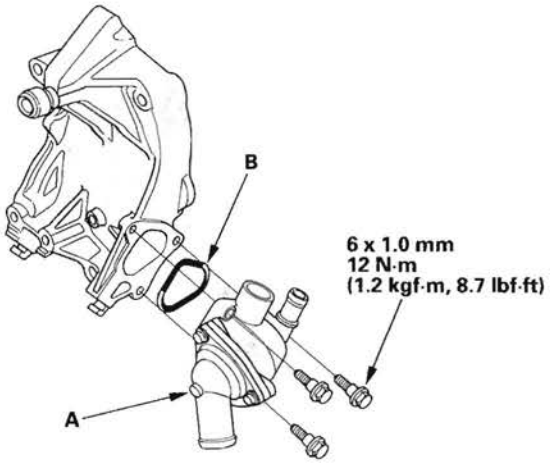

13. Clean and dry the water passage mating surfaces.

14. Apply liquid gasket, P/N 08717-0004, 08718-0001, 08718-0003, or 08718-0009, evenly to the engine block mating surface of the water passage. Install the component within 5 minutes of applying the liquid gasket.

    NOTE:
    - If you apply liquid gasket P/N 08718-0012, the component must be installed within 4 minutes.
    - If too much time has passed after applying the liquid gasket, remove the old liquid gasket and residue, then reapply new liquid gasket.

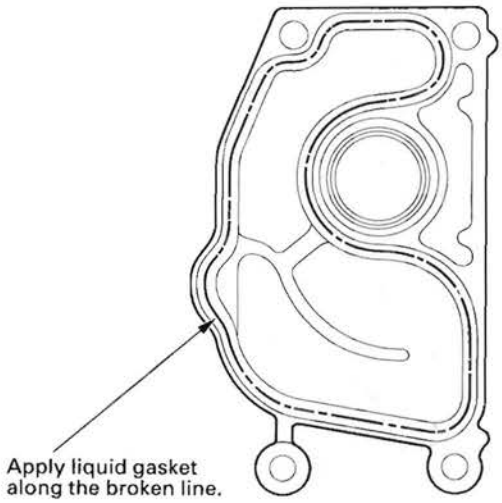

15. Install the water passage (A) with a new O-ring (B).

    NOTE:
    - Wait at least 30 minutes before filling the engine with oil.
    - Do not run the engine for at least 3 hours after installing the water passage.

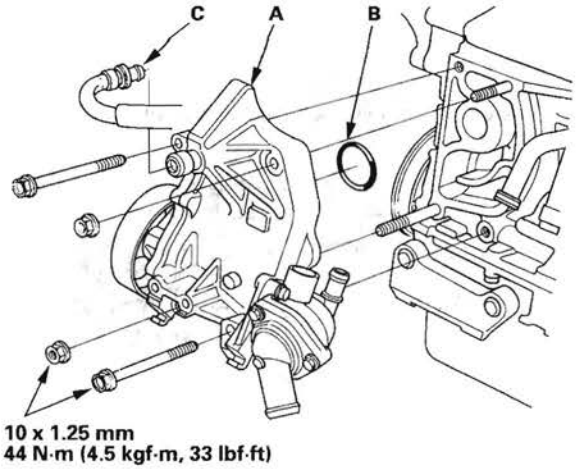

16. Install the PCV hose (C).

17. Install the connecting pipe (A) with a new O-ring (B).

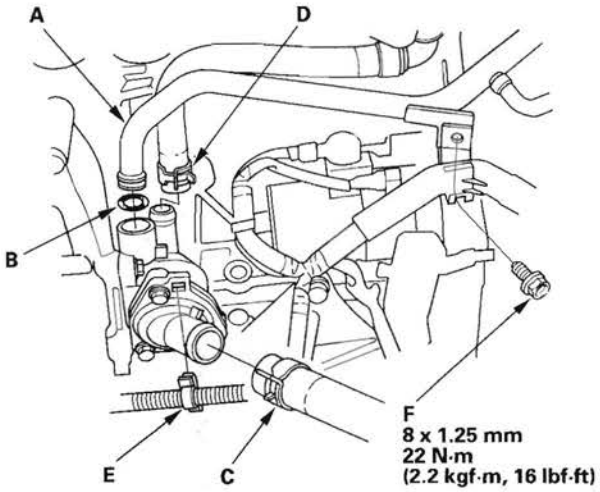

18. Install the lower radiator hose (C), water bypass hose (D), and harness clamp (E).

19. Tighten the bolt (F) securing the connecting pipe.

20. Install the intake manifold (see page 9-5).

21. Install the A/C compressor (see step 23 on page 5-17).

22. Install the condenser fan shroud assembly.

23. Install the alternator (see page 4-33).

24. Refill the radiator with engine coolant, and bleed the air from the cooling system with the heater valve open (see step 6 on page 10-6).

EGR Passage Removal and Installation

Removal

1. Drain the engine coolant (see page 10-6).
2. Remove the air cleaner housing (see page 11-340).
3. Remove the harness holder (A) from the bracket, then remove the harness holder bracket (B).

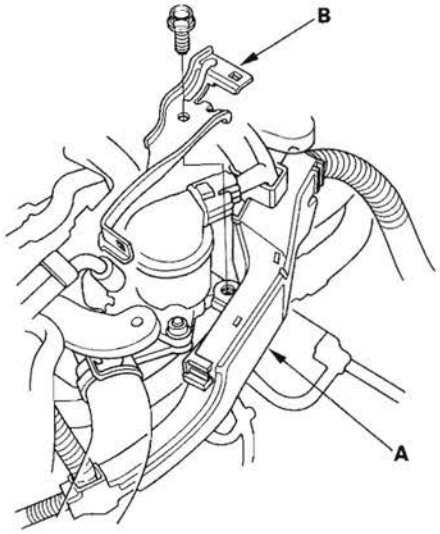

4. Remove the upper radiator hose (A), heater hose (B), and water bypass hose (C).

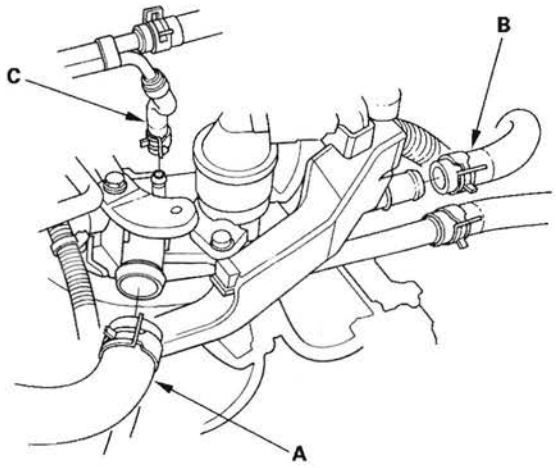

5. Remove the air cleaner housing brackets.

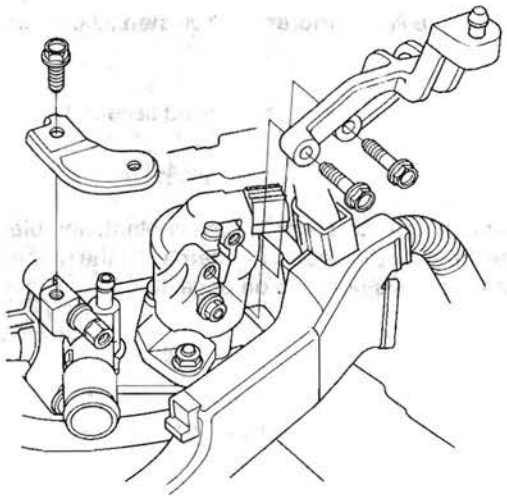

6. Disconnect the exhaust gas recirculation (EGR) valve connector.
7. Remove the EGR passage.

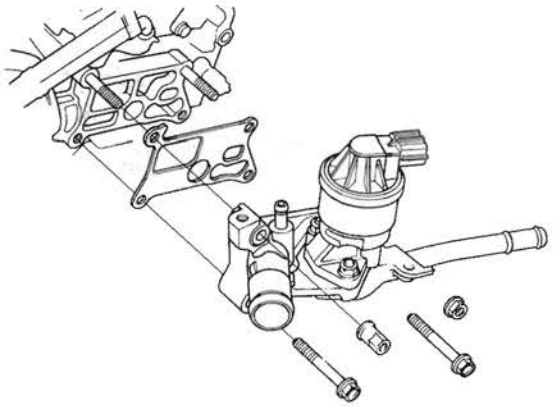

8. Remove the EGR valve.

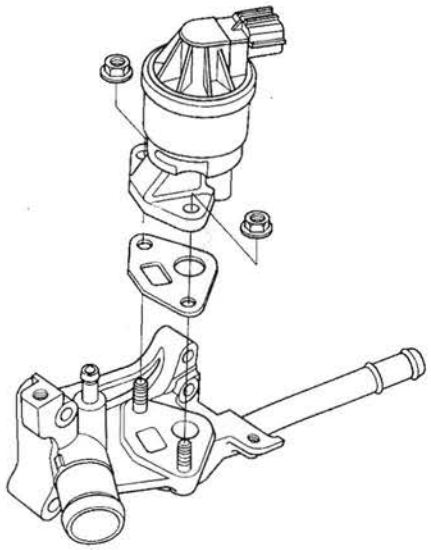

Installation

1. Install the EGR valve (A) with a new gasket (B).

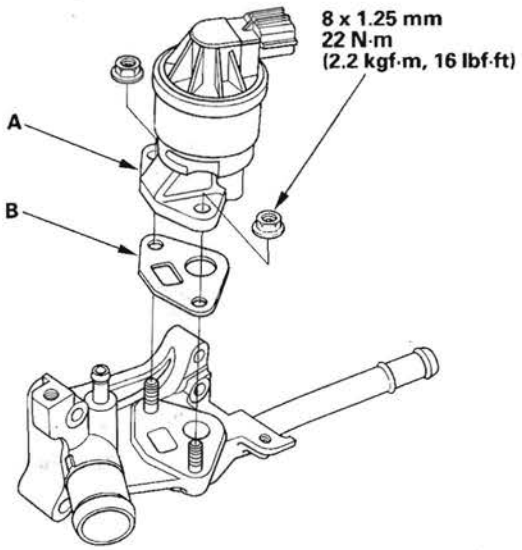

2. Install the EGR passage (A) with a new gasket (B).

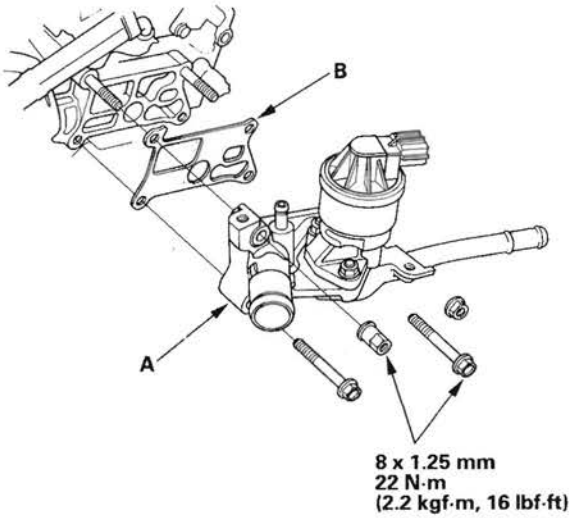

3. Connect the EGR valve connector.

(cont'd)

EGR Passage Removal and Installation (cont'd)

4. Install the air cleaner housing brackets.

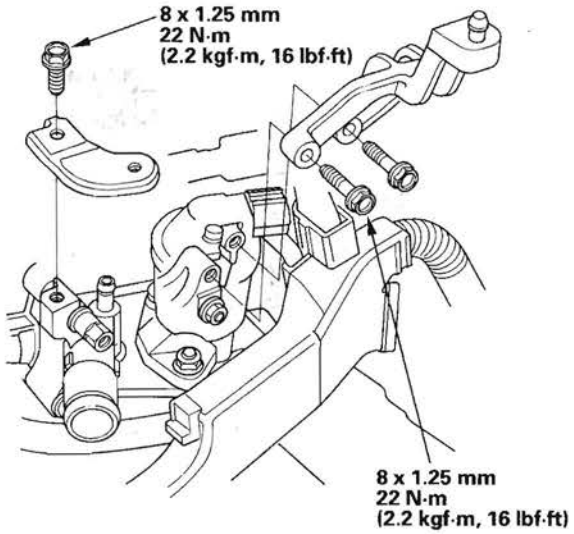

5. Install the upper radiator hose (A), heater hose (B), and water bypass hose (C).

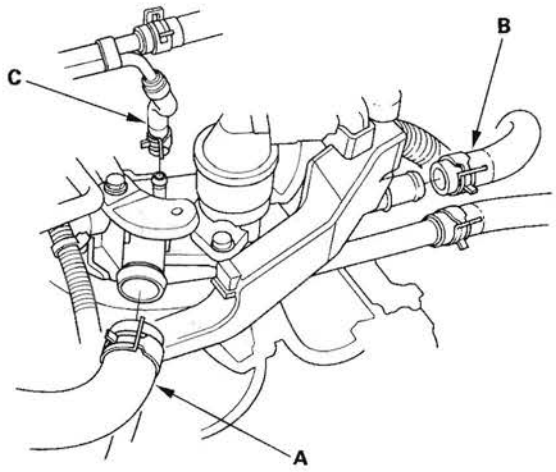

6. Install the harness holder bracket (A), then install the harness holder (B).

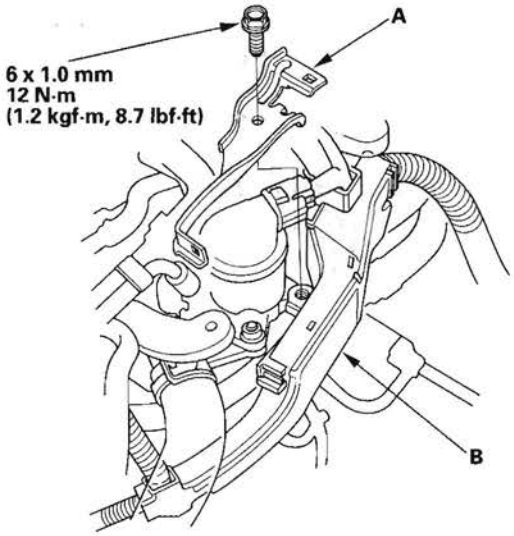

7. Install the air cleaner housing (see page 11-340).

8. Refill the radiator with engine coolant, and bleed the air from the cooling system with the heater valve open (see step 6 on page 10-6).

Fan, Fan Motor, Shroud Removal and Installation

Removal

1. Remove the hood support rod, then use it as shown to prop the hood in the wide-open position.

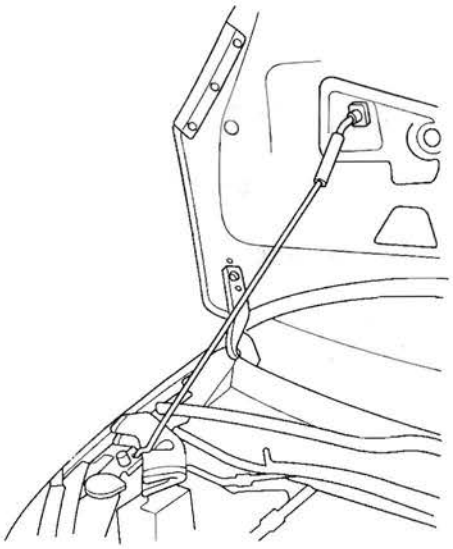

2. Remove the bulkhead cover (see page 20-149).

3. Disconnect the fan motor connectors (A) and hood switch connector (B), then remove the harness clips (C).

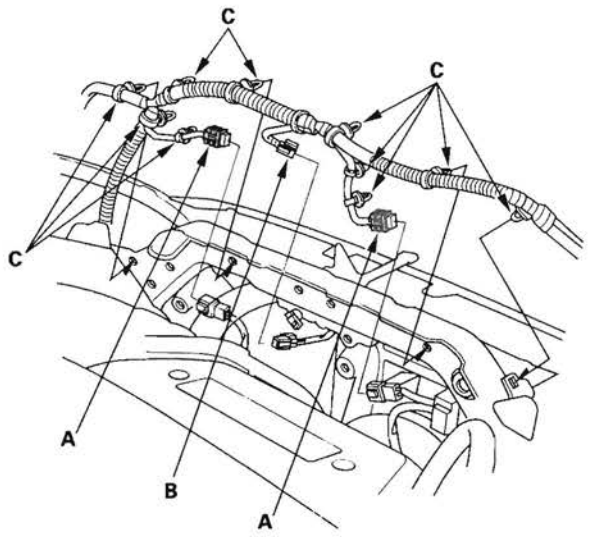

4. Remove the radiator upper brackets (A), then remove the front bulkhead (B).

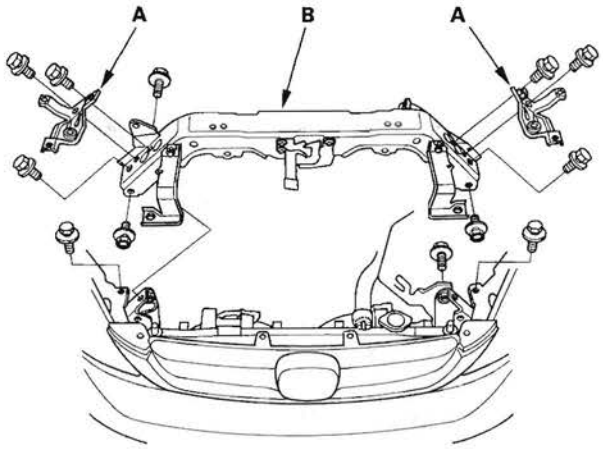

5. Remove the condenser fan shroud assembly (A), then remove the radiator fan shroud assembly (B) from condenser fan shroud side.

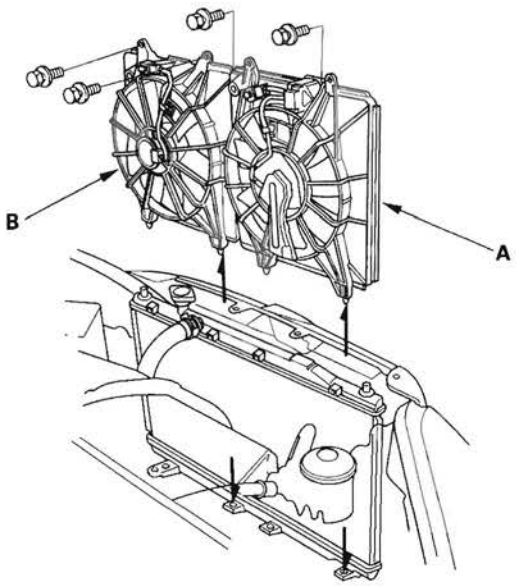

(cont'd)

Fan, Fan Motor, Shroud Removal and Installation (cont'd)

6. Disassemble the fan shrouds.

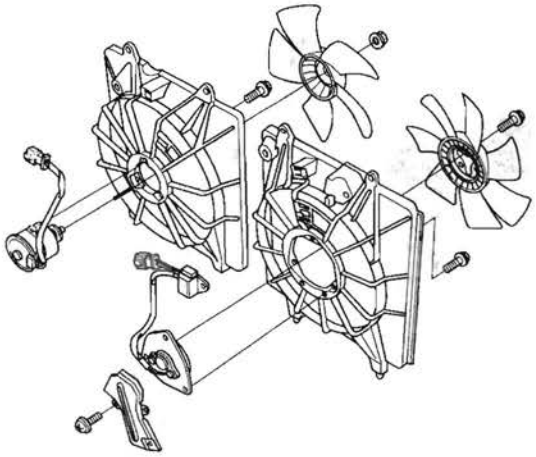

Installation

1. Assemble the fan shrouds.

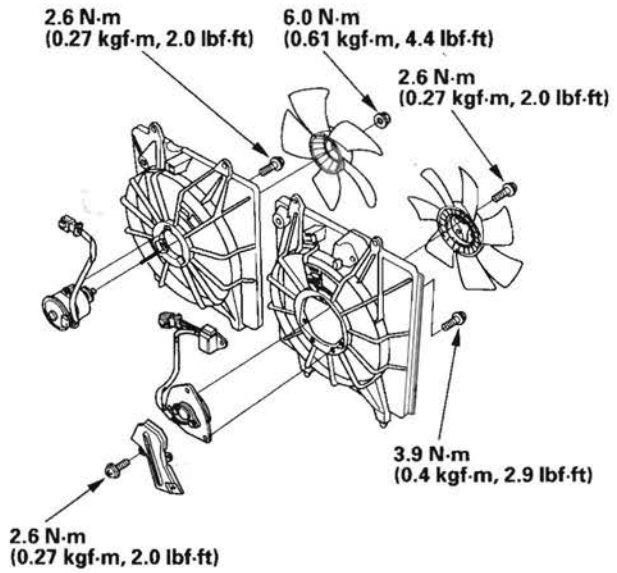

2. Install the radiator fan shroud assembly (A), then install the condenser fan shroud assembly (B).

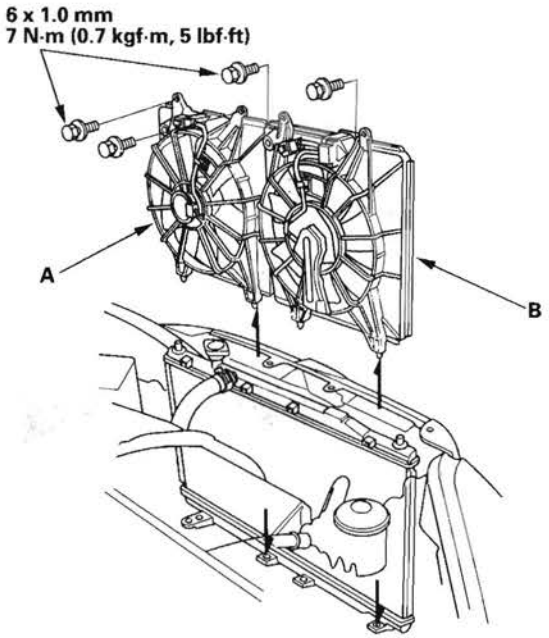

3. Install the front bulkhead (A), then install the radiator upper brackets (B).

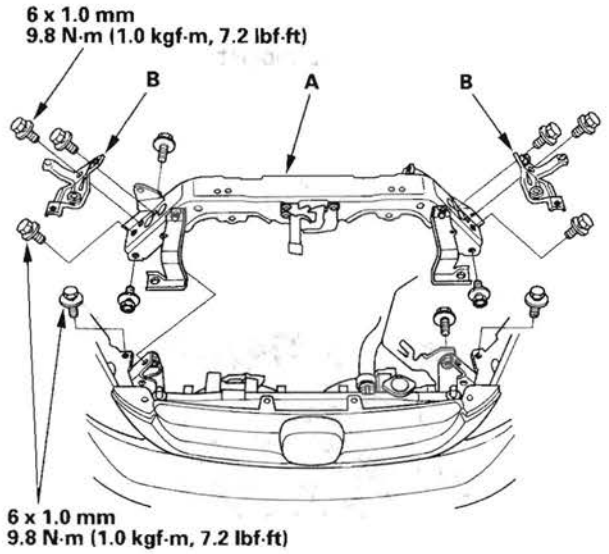

4. Apply body paint to the bulkhead mounting bolts.

5. Connect the fan motor connectors (A) and hood switch connector (B), then install the harness clips (C).

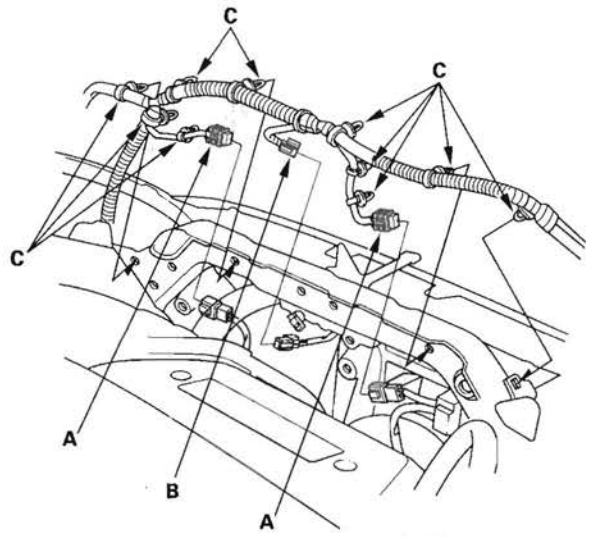

6. Remove the bulkhead cover (see page 20-149).

Radiator Replacement

For Japan-produced Model

1. Drain the engine coolant (see page 10-6).
2. Remove the hood support rod, then use it as shown to prop the hood in the wide-open position.

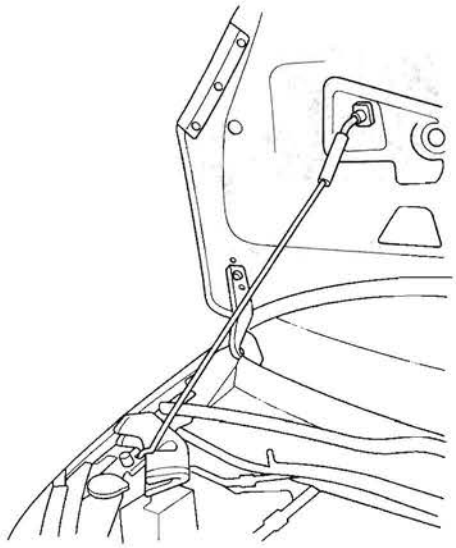

3. Remove the bulkhead cover (see page 20-149).
4. Remove the coolant reservoir hose (A) and upper radiator hose (B).

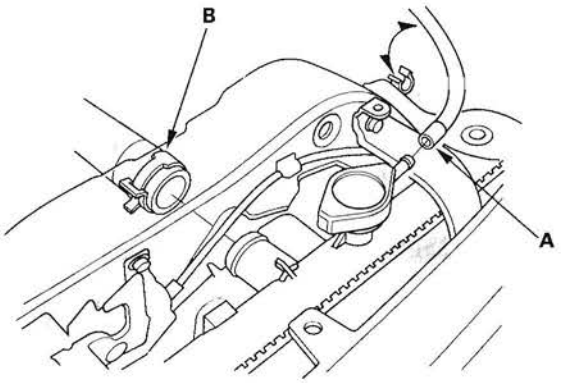

5. Raise the vehicle on the lift to full height.
6. Remove the splash shield.
7. Disconnect the engine coolant temperature (ECT) sensor 2 connector (A), and remove the harness clip (B).

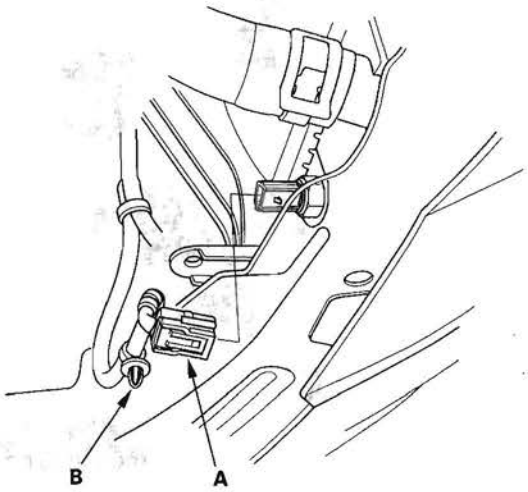

8. Remove the lower radiator hose (A).

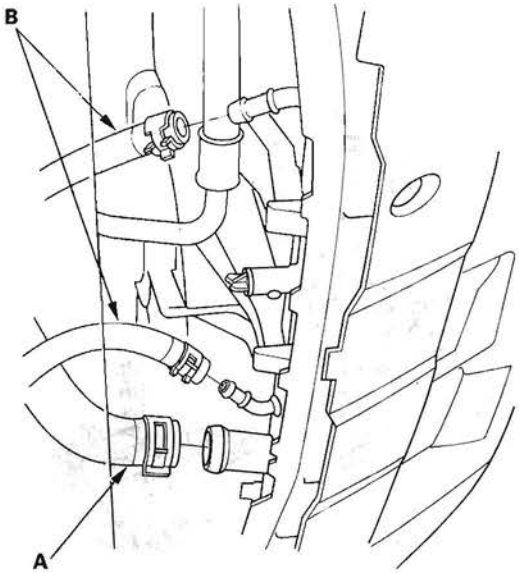

9. Remove the automatic transmission fluid (ATF) cooler hoses (B), then plug the hose and line.

10. Lower the vehicle on the lift.

11. Disconnect the fan motor connectors (A) and hood switch connector (B), then remove the harness clips (C).

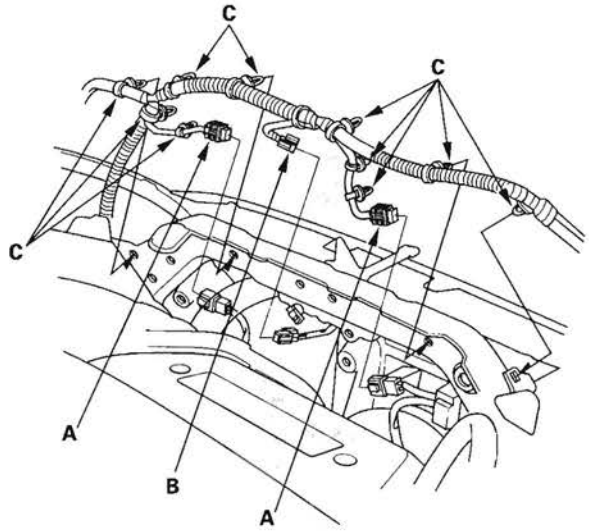

12. Remove the radiator upper brackets (A), then remove the front bulkhead (B).

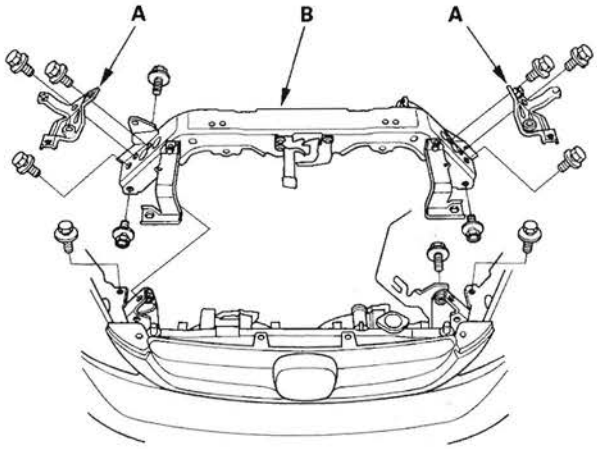

13. Pull up the radiator, then remove the radiator fan shroud assembly (A), A/C condenser fan shroud assembly (B), radiator cap (C), ETC sensor 2 (D), and drain plug (E).

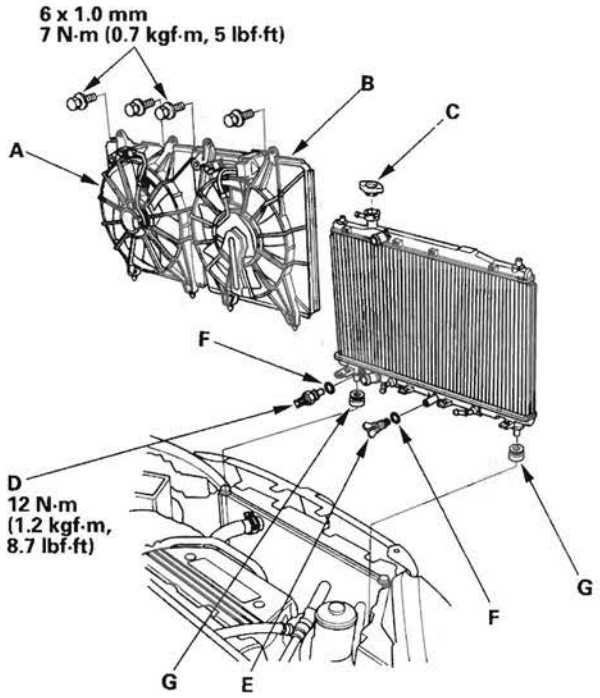

14. Reassemble the radiator with new O-rings (F).

15. Install the radiator. Make sure the lower cushions (G) are set securely.

(cont'd)

Radiator Replacement (cont'd)

16. Install the front bulkhead (A), then install the radiator upper brackets (B).

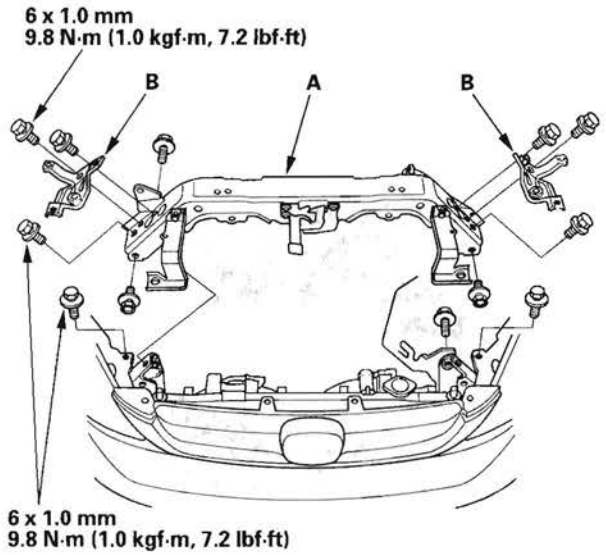

17. Apply body paint to the bulkhead mounting bolts.

18. Connect the fan motor connectors (A) and hood switch connector (B), then install the harness clips (C).

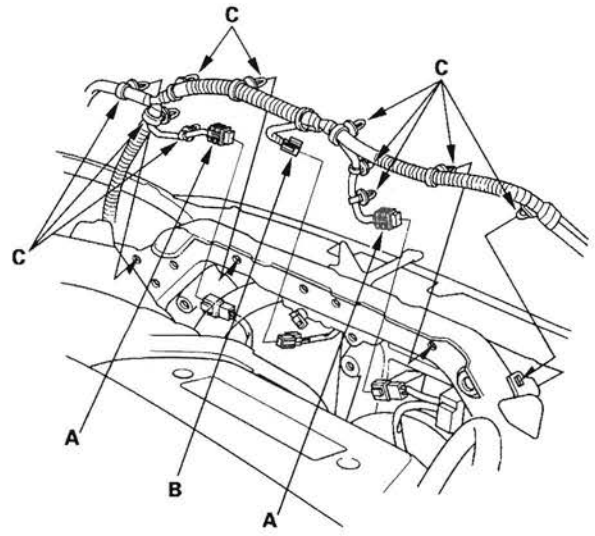

19. Raise the vehicle on the lift to full height.

20. Install the lower radiator hose (A) and ATF cooler hoses (B).

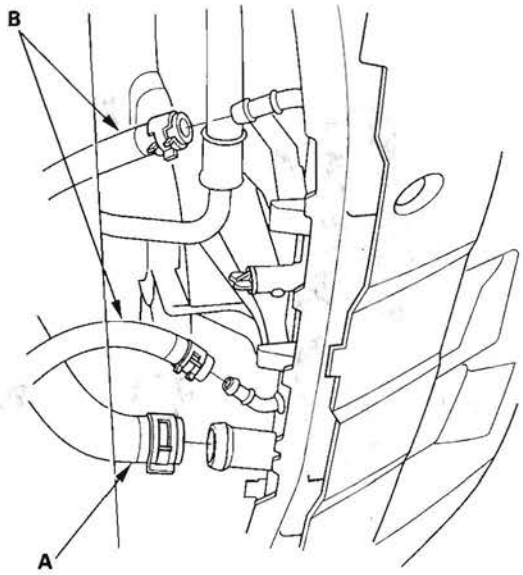

21. Connect the engine coolant temperature (ECT) sensor 2 connector (A), and install the harness clip (B).

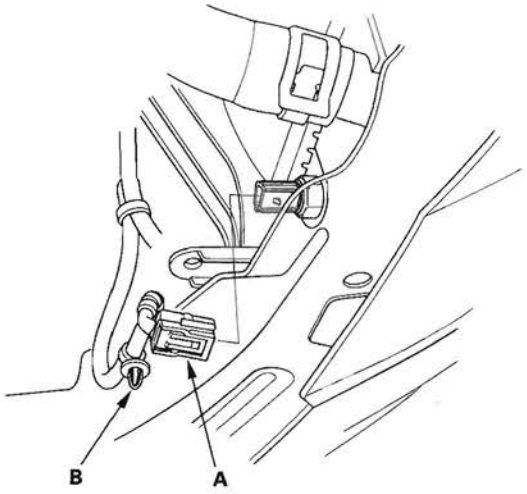

22. Install the splash shield.

23. Lower the vehicle on the lift.

24. Install the coolant reservoir hose (A) and upper radiator hose (B).

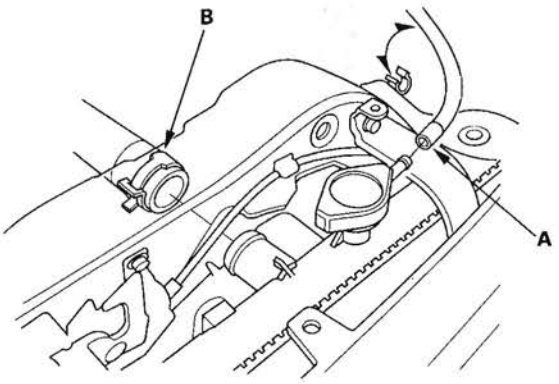

25. Install the bulkhead cover (see page 20-149).

26. Refill the radiator with engine coolant, and bleed the air from the cooling system with the heater valve open (see step 6 on page 10-6).

For U.S.A.-produced Model

1. Drain the engine coolant (see page 10-6).

2. Remove the hood support rod, then use it as shown to prop the hood in the wide-open position.

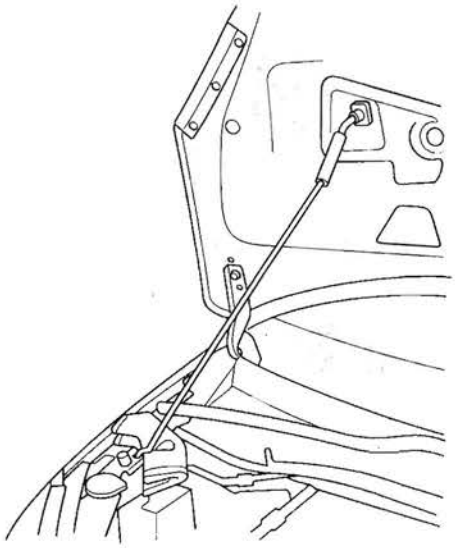

3. Remove the bulkhead cover (see page 20-149).

4. Remove the coolant reservoir hose (A) and upper radiator hose (B).

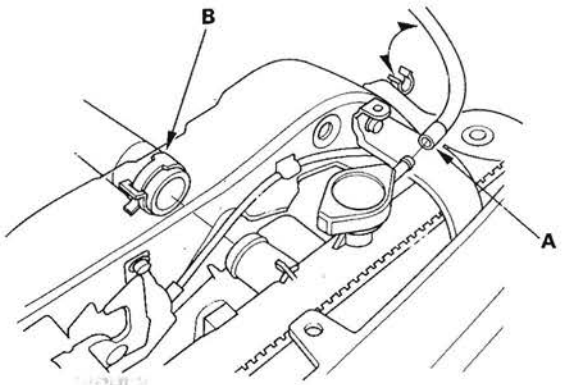

(cont'd)

Radiator Replacement (cont'd)

5. Raise the vehicle on the lift to full height.
6. Remove the splash shield.
7. Disconnect the engine coolant temperature (ECT) sensor 2 connector (A), and remove the harness clamp (B).

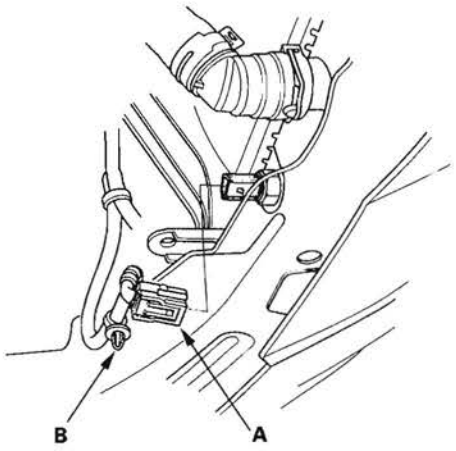

8. Clean any dirt off the quick connector (A), radiator, and lower radiator hose.

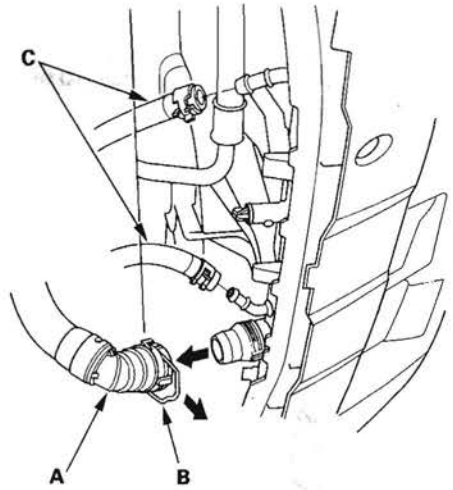

9. Pull out the lock (B) by hand, then wiggle the quick connector loose, and remove it from the radiator. Do not use any tools to remove the quick connector.
10. Remove the automatic transmission fluid (ATF) cooler hoses (C), then plug the hoses and lines.
11. Lower the vehicle on the lift.
12. Disconnect the fan motor connectors (A) and hood switch connector (B), then remove the harness clips (C).

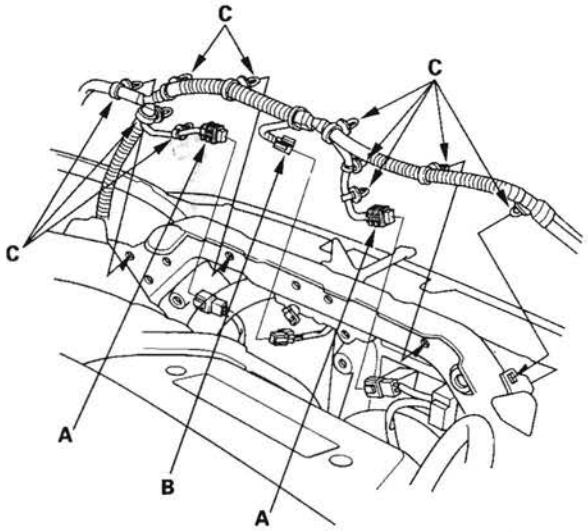

13. Remove the radiator upper brackets (A), then remove the front bulkhead (B).

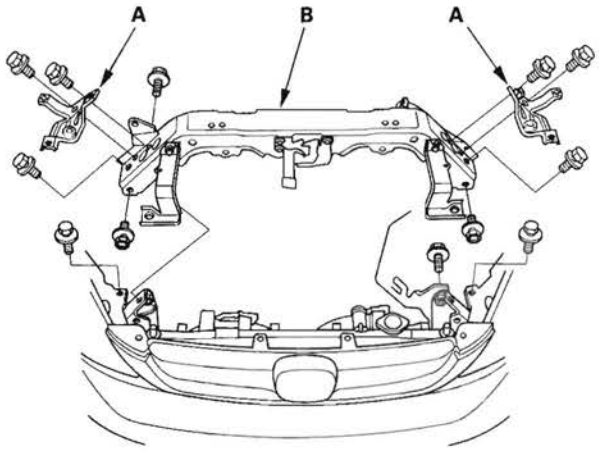

14. Pull up the radiator, then remove the radiator fan shroud assembly (A), A/C condenser fan shroud assembly (B), radiator cap (C), ETC sensor 2 (D), and drain plug (E).

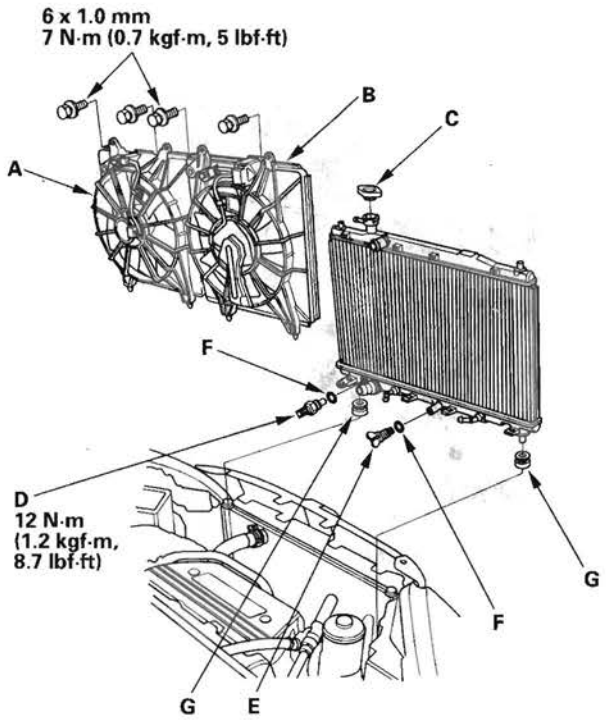

15. Reassemble the radiator with new O-rings (F).

16. Install the radiator. Make sure the lower cushions (G) are set securely.

17. Install the front bulkhead (A), then install the radiator upper brackets (B).

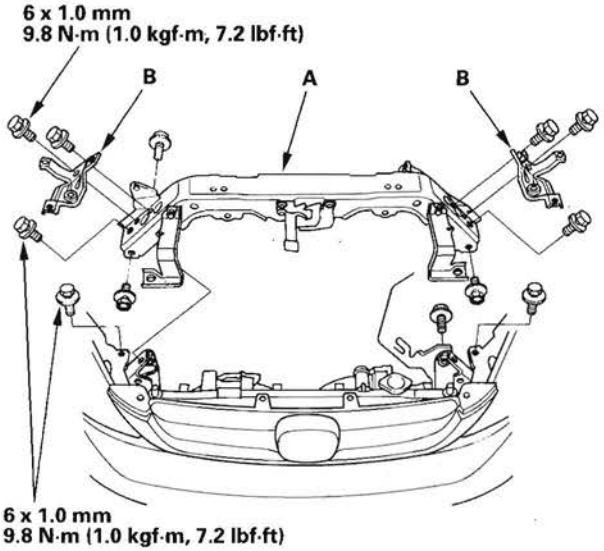

18. Apply body paint to the bulkhead mounting bolts.

19. Connect the fan motor connectors (A) and hood switch connector (B), then install the harness clips (C).

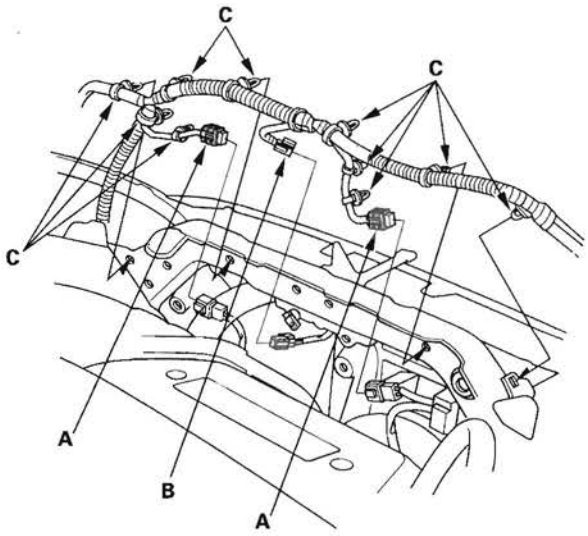

(cont'd)

Radiator Replacement (cont'd)

20. Raise the vehicle on the lift to full height.

21. Check the quick connector (A) and set ring (B) for cracks or damage. If the connector and/or set ring are cracked or damaged, replace the connector.

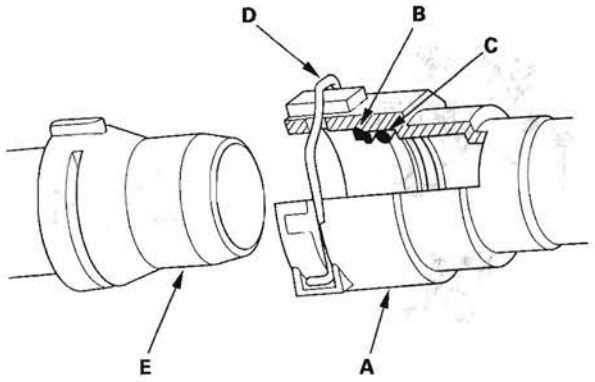

22. Make sure the set ring is in place inside the quick connector. If the set ring is displaced or not properly seated in the connector, replace the quick connector.

23. Replace the O-ring (C) in the quick connector.

24. Check the lock (D). If the lock is damaged or deformed, replace it. When installing the new lock to the connector, slide it straight down along the groove.

25. Install a new lower radiator hose on the quick connector, and install the clamp.

26. Clean the connecting surface of the radiator (E), then apply clean engine coolant around the connecting surface.

27. Push down the lock (A), then push the quick connector (B) onto the radiator until you hear it click.

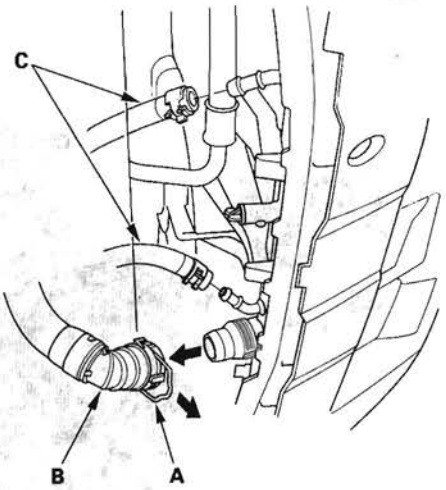

28. Install ATF cooler hoses (C).

29. Connect the engine coolant temperature (ECT) sensor 2 connector (A), and install the harness clip (B).

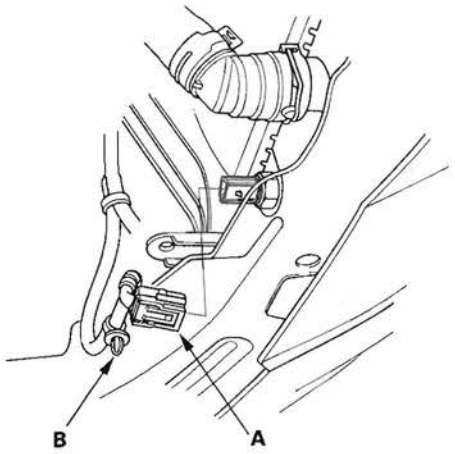

30. Install the splash shield.

31. Lower the vehicle on the lift.

32. Install the coolant reservoir hose (A) and upper radiator hose (B).

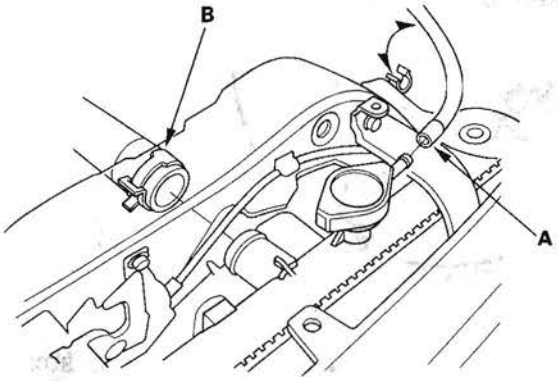

33. Install the bulkhead cover (see page 20-149).

34. Refill the radiator with engine coolant, and bleed the air from the cooling system with the heater valve open (see step 6 on page 10-6).

Component Location Index

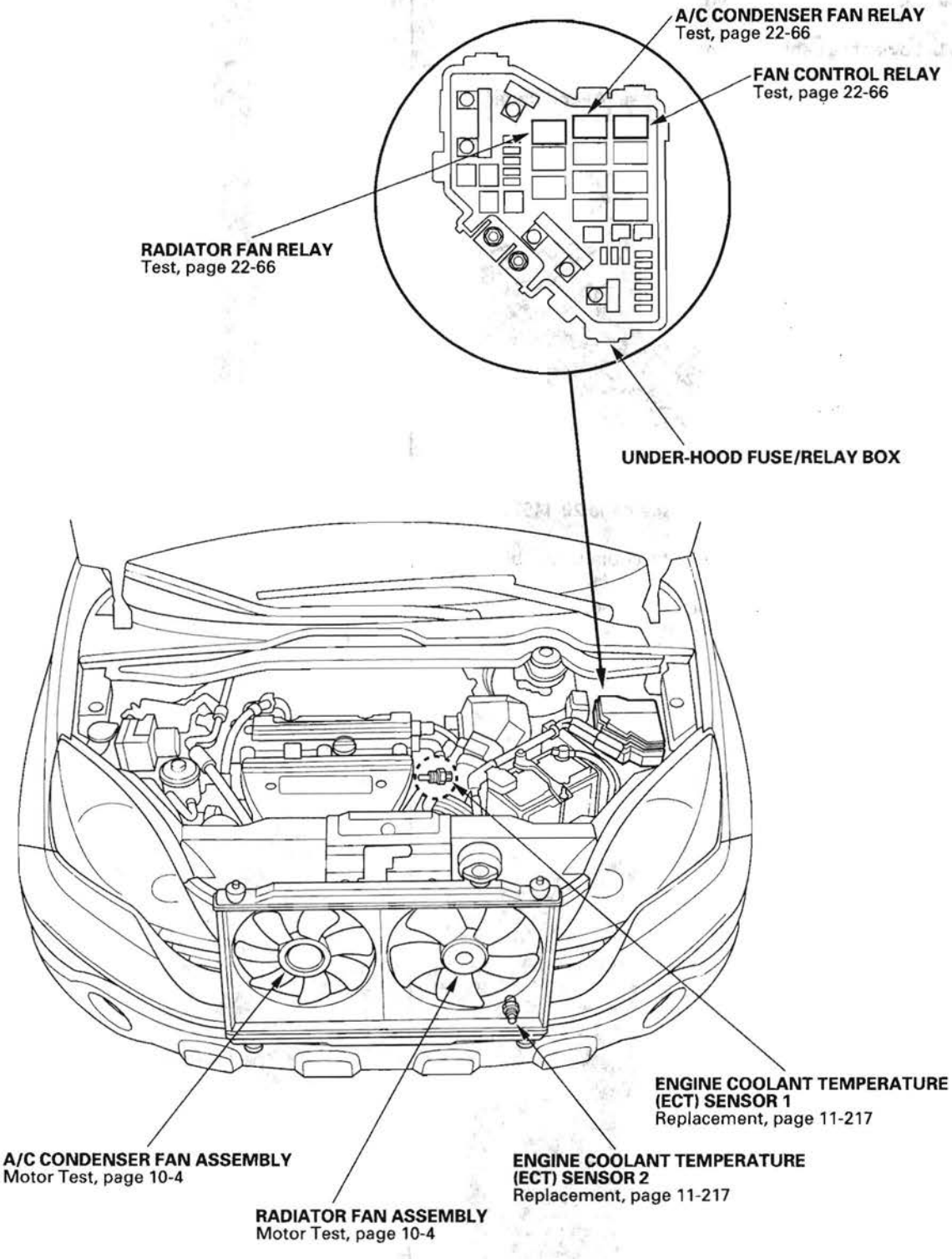

Symptom Troubleshooting Index

Symptom	Diagnostic Procedure	Also check for
Engine overheats	1. Check the coolant level. 2. Check for any engine coolant leakage (from gaskets, hoses, O-rings, etc.). 3. Check for dirt, leaves, or insects on radiator and condenser. 4. Check for deteriorated coolant. 5. Check for a damaged or deformed fan shroud. 6. Inspect the fan motors (see page 10-4) or fan relays (see page 22-66). 7. Check the radiator cap (see page 10-3). 8. Check the thermostat (see page 10-4). 9. Inspect the water pump (see page 10-5). 10. Check for a plugged or deteriorated radiator hoses. 11. Check for plugged heater core or hoses. 12. Check for a damaged cylinder head gasket.	
The A/C condenser fan runs at low speed, but it does not run at high speed when the engine coolant temperature is above 199 °F (93 °C)	A/C condenser fan high speed circuit troubleshooting (see page 21-41).	Cleanliness and tightness of all connectors
With the A/C off and the engine coolant temperature at 199 °F (93 °C) or below, the radiator fan runs at high speed and the A/C condenser fan does not run. When the engine coolant temperature is above 199 °F (93 °C), both fans run at high speed	Remove the fan control relay, and test. • If the relay is faulty, replace it. • If the relay is OK, check for a short in the wire between the fan control relay 5P socket terminal No. 1 and radiator fan motor 2P connector terminal No. 1.	Cleanliness and tightness of all connectors
Both the radiator fan and the A/C condenser fan run at high speed with the ignition switch ON (II), the A/C off, and the engine coolant temperature below 194 °F (90 °C)	Check for a short in the wire between A/C condenser fan relay 4P socket terminal No. 3 and PCM connector terminal A5.	Cleanliness and tightness of all connectors
Both the radiator fan and the A/C condenser fan run at low speed with the ignition switch ON (II) and the A/C off	Check for a short in the wire between radiator fan relay 4P socket terminal No. 4 and PCM connector terminal A4.	Cleanliness and tightness of all connectors
Both the radiator fan and the A/C condenser fan do not run at low speed with the A/C on	Radiator and A/C condenser fans low speed circuit troubleshooting (see page 21-37).	Cleanliness and tightness of all connectors
Both the radiator fan and the A/C condenser fan run at low speed, but the radiator fan does not run at high speed when the engine coolant temperature is above 199 °F (93 °C)	Radiator fan high speed circuit troubleshooting (see page 10-29).	Cleanliness and tightness of all connectors
Both the radiator fan and the A/C condenser fan do not run at high speed when the engine coolant temperature is above 199 °F (93 °C)	Check for an open in the wire between A/C condenser fan relay 4P socket terminal No. 3 and PCM connector terminal A5.	Cleanliness and tightness of all connectors

Circuit Diagram

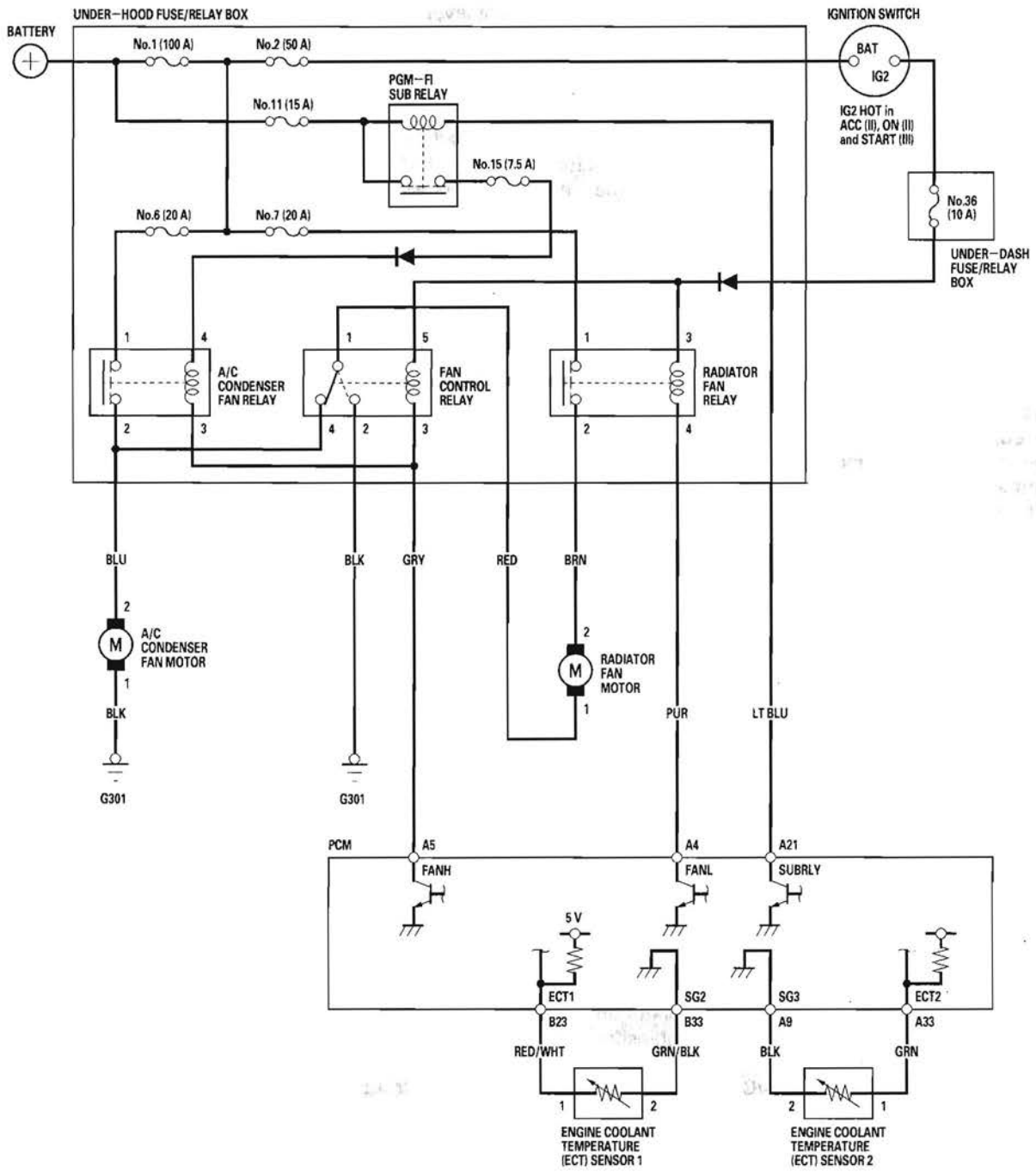

Radiator Fan High Speed Circuit Troubleshooting

1. Remove the fan control relay from the under-hood fuse/relay box, and test it (see page 22-66).

   Is the relay OK?

   YES—Go to step 2.

   NO—Replace the fan control relay. ■

2. Measure the voltage between the fan control relay 5P socket terminal No. 5 and body ground.

   FAN CONTROL RELAY 5P SOCKET

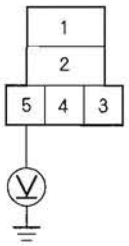

   Terminal side of female terminals

   Is there battery voltage?

   YES—Go to step 3.

   NO—Replace the under-hood fuse/relay box. ■

3. Check for continuity between the fan control relay 5P socket terminal No. 2 and body ground.

   FAN CONTROL RELAY 5P SOCKET

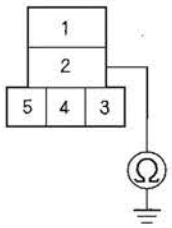

   Terminal side of female terminals

   Is there continuity?

   YES—Replace the under-hood fuse/relay box. ■

   NO—Repair open in the wire between the fan control relay 5P socket terminal No. 2 and body ground. If the wire is OK, check for poor ground at G301. ■

Fuel and Emissions

Fuel and Emissions Systems
Special Tools 11-2
General Troubleshooting Information 11-3
DTC Troubleshooting Index 11-10
Symptom Troubleshooting Index 11-14
System Description 11-16
How to Set Readiness Codes 11-57

PGM-FI System
Component Location Index 11-60
DTC Troubleshooting 11-62
F-CAN Circuit Troubleshooting 11-187
MIL Circuit Troubleshooting 11-196
DLC Circuit Troubleshooting 11-197
Injector Replacement 11-212
A/F Sensor Replacement 11-214
Secondary HO2S Replacement 11-214
CMP Sensor B Replacement 11-215
CKP Sensor Replacement 11-215
MAP Sensor Replacement 11-216
MAF Sensor/IAT Sensor Replacement 11-216
ECT Sensor 1 Replacement 11-217
ECT Sensor 2 Replacement 11-217
Knock Sensor Replacement 11-218
PCM Replacement 11-219

Electronic Throttle Control System
Component Location Index 11-221
DTC Troubleshooting 11-222
APP Sensor Signal Inspection 11-261
Accelerator Pedal Module Removal/Installation 11-262

VTEC/VTC
Component Location Index 11-263
DTC Troubleshooting 11-264
VTC Oil Control Solenoid Valve Removal/Test/Installation 11-284
CMP Sensor A Replacement 11-285
Rocker Arm Oil Control Valve Removal/Installation 11-286
Rocker Arm Oil Pressure Switch Removal/Installation 11-286

Idle Control System
Component Location Index 11-287
DTC Troubleshooting 11-288
A/C Signal Circuit Troubleshooting 11-297
Alternator FR Signal Circuit Troubleshooting 11-298
PSP Switch Signal Circuit Troubleshooting 11-299
Brake Pedal Position Switch Signal Circuit Troubleshooting 11-301
Idle Speed Inspection 11-303
PCM Idle Learn Procedure 11-304

Fuel Supply System
Component Location Index 11-305
DTC Troubleshooting 11-307
Fuel Pump Circuit Troubleshooting 11-313
Fuel Pressure Relieving 11-317
Fuel Pressure Test 11-319
Fuel Tank Draining 11-320
Fuel Line Inspection 11-321
Fuel Line/Quick-Connect Fitting Precautions 11-323
Fuel Line/Quick-Connect Fitting Removal 11-324
Fuel Line/Quick-Connect Fitting Installation 11-326
Fuel Tank Unit Removal/Installation 11-329
Fuel Pressure Regulator Replacement 11-331
Fuel Filter Replacement 11-331
Fuel Pump/Fuel Gauge Sending Unit Replacement 11-332
Fuel Tank Replacement 11-333
Fuel Fill Pipe Removal/Installation 11-334
Fuel Gauge Sending Unit Test 11-335
Low Fuel Indicator Test 11-336

Intake Air System
Component Location Index 11-337
Throttle Body Test 11-338
Throttle Body Cleaning 11-338
Intake Air Bypass Control Thermal Valve Test 11-339
Air Cleaner Removal/Installation 11-340
Air Cleaner Element Inspection/Replacement 11-340
Resonator Removal/Installation 11-341
Throttle Body Removal/Installation 11-342
Throttle Body Disassembly/Reassembly 11-343
Intake Air Bypass Control Thermal Valve Replacement 11-344

Catalytic Converter System
Component Location Index 11-345
DTC Troubleshooting 11-346
Catalytic Converter Removal/Installation 11-348

EGR System
Component Location Index 11-349
DTC Troubleshooting 11-350
EGR Valve Replacement 11-364

PCV System
Component Location Index 11-365
PCV Valve Inspection 11-366
PCV Valve Replacement 11-366

EVAP System
Component Location Index 11-367
DTC Troubleshooting 11-368
EVAP Canister Replacement 11-395
FTP Sensor Replacement 11-396
EVAP Canister Vent Shut Valve Replacement 11-397
EVAP Canister Purge Valve Replacement 11-397

Special Tools

Ref. No.	Tool Number	Description	Qty
①	07AAA-S0XA100	Fuel Sender Wrench	1
②	07AAJ-S6MA150	Fuel Pressure Gauge Attachment Set	1
③	07JAZ-001000B	Vacuum/Pressure Gauge, 0—4 in.Hg	1
④	07NAJ-P07010A	Pressure Gauge Adapter	1
⑤	07ZAJ-S5AA200	Oil Pressure Hose	1
⑥-1	07406-0020201	A/T Pressure Hose	1
⑥-2	07406-0070301	A/T Low Pressure Gauge W/Panel	1
⑥-3	07MAJ-PY4011A	A/T Pressure Hose, 2,210 mm	1
⑥-4	07MAJ-PY40120	A/T Pressure Hose, Adapter	1
⑦	07406-004000B	Fuel Pressure Gauge	1

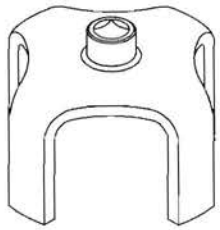

①

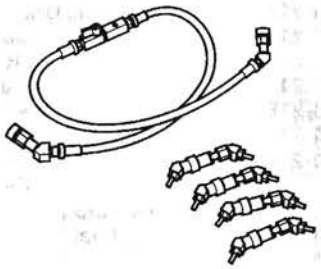

②



③

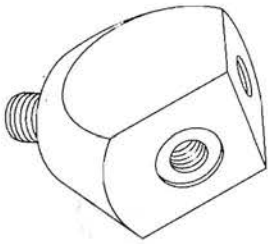

④

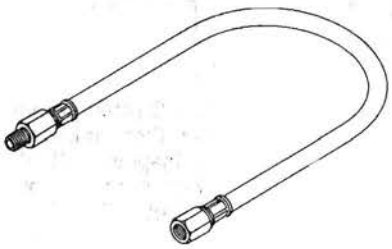

⑤

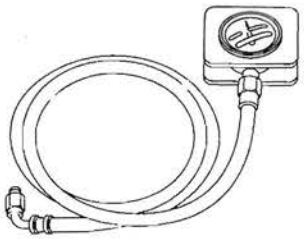

⑥-1, ⑥-2, ⑥-3, ⑥-4



⑦

General Troubleshooting Information

Intermittent Failures

The term "intermittent failure" means a system may have had a failure, but it checks OK now. If the malfunction indicator lamp (MIL) on the dash does not come on, check for poor connections or loose pins at all connectors related to the circuit that you are troubleshooting. If the MIL was on but then went out, the original problem may have been intermittent.

Opens and Shorts

"Open" and "short" are common electrical terms. An open is a break in a wire or at a connection. A short is an accidental connection of a wire to ground or to another wire. In simple electronics, this usually means something won't work at all. With complex electronics (such as PCMs) this can sometimes mean something works, but not the way it's supposed to.

How to Use the HDS (Honda Diagnostic System)

If the MIL (malfunction indicator lamp) has come on

1. Start the engine, and check the MIL (A).

   NOTE: If the ignition switch is turned ON (II), and the engine is not started, the MIL stays on for 15—20 seconds (see page 11-57).

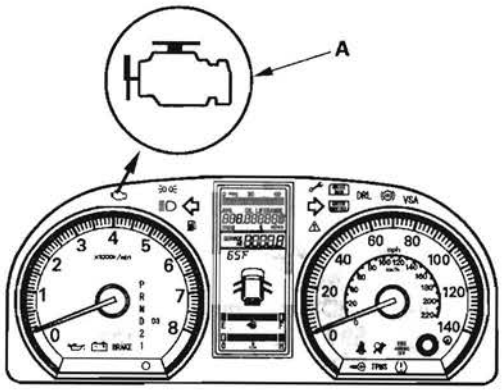

2. If the MIL stays on, connect the HDS to the data link connector (DLC) (A) located under the driver's side of the dashboard.

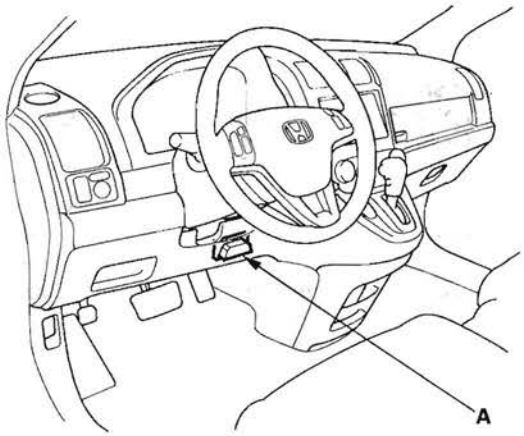

3. Turn the ignition switch ON (II).

4. Check the diagnostic trouble code (DTC) and note it. Also check the freeze data and/or on-board snapshot data, and download any data found. Then refer to the indicated DTC's troubleshooting, and begin the appropriate troubleshooting procedure.

   NOTE:
   - Freeze data indicates the engine conditions when the first system malfunction, misfire, or fuel trim malfunction that activated the MIL was detected.
   - The HDS can read the DTC, freeze data, on-board snapshot, current data, and other powertrain control module (PCM) data.
   - For specific operations, refer to the user's manual that came with the HDS.

5. If no DTCs are found, go to MIL troubleshooting (see page 11-196).

If the MIL did not stay on
If the MIL did not stay on but there is a driveability problem, do the symptom troubleshooting.

If you can't duplicate the DTC
Some of the troubleshooting requires you to reset the PCM and try to duplicate the DTC. If the problem is intermittent and you can't duplicate the code, do not continue through the procedure. To do so will only result in confusion and possibly, a needlessly replaced PCM.

(cont'd)

General Troubleshooting Information (cont'd)

HDS Clear Command

The PCM stores various specific data to correct the system even if there is no electrical power such as when the battery negative terminal or No. 19 FI MAIN (15 A) fuse are disconnected. Stored data based on failed parts should be cleared by using the "CLEAR COMMAND" of the HDS, if parts are replaced.

The HDS has three kinds of clear commands to meet this purpose. They are DTC clear, PCM reset, and crank (CKP) pattern clear. DTC clear command erases all stored DTC codes, freeze data, on-board snapshot, and readiness codes. This must be done with the HDS after reproducing the DTC during troubleshooting.
The PCM reset command erases all stored DTC codes, freeze data, on-board snapshot, readiness codes, and all specific data to correct the system except crank (CKP) pattern. If the crank (CKP) pattern data in the PCM was cleared, you must do the crank (CKP) pattern learn procedure. The crank (CKP) pattern clear command erases only crank (CKP) pattern data. This command is for repair of a misfire or the CKP sensor.

Scan Tool Clear Command

If you are using a generic scan tool to clear commands, be aware that there is only one setting for clearing the PCM, and it clears all commands at the same time (CKP pattern learn, idle learn, readiness codes, freeze data, on-board snapshot, and DTCs). After you clear all commands, you then need to do these procedures, in this order: PCM idle learn procedure (see page 11-304); CKP pattern learn procedure; test-drive to set readiness codes to complete (see page 11-57).

DTC Clear

1. Clear the DTC with the HDS while the engine is stopped.
2. Turn the ignition switch OFF.
3. Turn the ignition switch ON (II), and wait for 30 seconds.
4. Turn the ignition switch OFF, and disconnect the HDS from the DLC.

PCM Reset

1. Reset the PCM with the HDS while the engine is stopped.
2. Turn the ignition switch OFF.
3. Turn the ignition switch ON (II), and wait for 30 seconds.
4. Turn the ignition switch OFF, and disconnect the HDS from the DLC.
5. Do the PCM idle learn procedure (see page 11-304).

Crank (CKP) Pattern Clear/Crank (CKP) Pattern Learn

Clear/Learn Procedure (with the HDS)

1. Connect the HDS to the data link connector (DLC) (A) located under the driver's side of the dashboard.

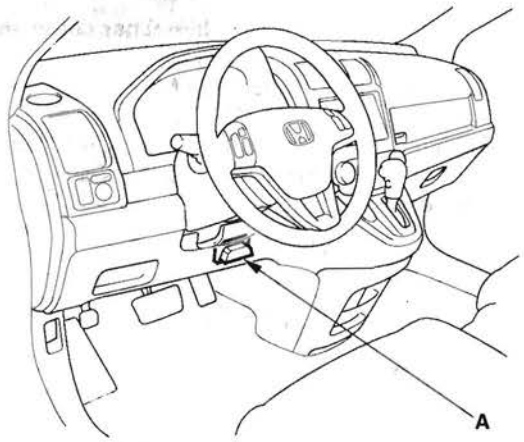

2. Turn the ignition switch ON (II).
3. Make sure the HDS communicates with the PCM. If it doesn't, go to the DLC circuit troubleshooting (see page 11-197).
4. Select CRANK PATTERN in the ADJUSTMENT MENU with the HDS.
5. Select CRANK PATTERN LEARNING with the HDS, and follow the screen prompts.
6. The CKP pattern learn procedure is complete.

Learn Procedure (without the HDS)

1. Start the engine. Hold the engine speed at 3,000 rpm without load (in Park or neutral) until the radiator fan comes on.
2. Test-drive the vehicle on a level road: Decelerate (with the throttle fully closed) from an engine speed of 2,500 rpm down to 1,000 rpm with the transmission in 2 position.
3. Repeat step 2 several times.
4. Turn the ignition switch OFF.
5. Turn the ignition switch ON (II), and wait for 30 seconds. The CKP pattern learn procedure is complete.

How to End a Troubleshooting Session (required after any troubleshooting)

1. Reset the PCM with the HDS.
2. Do the PCM idle learn procedure (see page 11-304).
3. Turn the ignition switch OFF.
4. Disconnect the HDS from the DLC.

NOTE: The PCM is part of the immobilizer system. If you replace the PCM, it will have a different immobilizer code. In order for the engine to start, you must rewrite the immobilizer code with the HDS (immobilizer system section).

(cont'd)

General Troubleshooting Information (cont'd)

How to Troubleshoot Circuits at the PCM Connectors

NOTE: The PCM overwrites data and monitors the EVAP system for up to 15 minutes after the ignition switch is turned OFF. Jumping the SCS line after turning the ignition switch OFF cancels this function. Disconnecting the PCM during this function, without jumping the SCS line first, can damage the PCM.

1. Jump the SCS line with the HDS.
2. Remove the under-hood fuse/relay box (A).

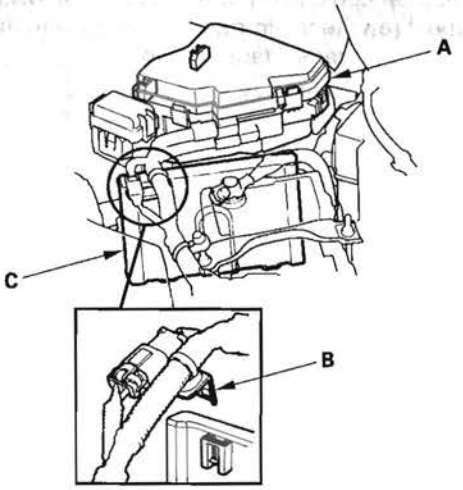

3. Disconnect the harness bracket (B).
4. Remove the PCM cover (C).
5. Disconnect the PCM connectors A, B, and C.

   NOTE: PCM connectors A, B, and C have symbols (A=□, B=△, C=○) embossed on them for identification.

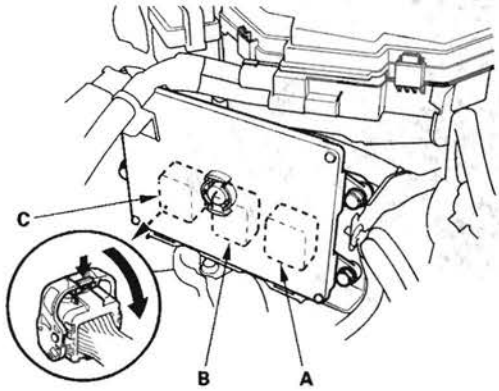

6. When diagnosis/troubleshooting is done at the PCM connector, use the terminal test port (A) above the terminal you need to check.

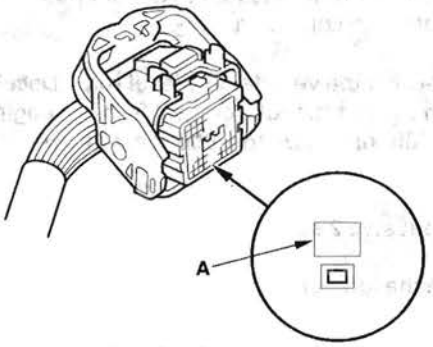

7. Connect one side of the patch cord (A) terminals to a commercially available digital multimeter (B), and connect the other side of the patch cord terminals to a commercially available banana jack (Pomona Electronics Tool No. 3563 or equivalent) (C).

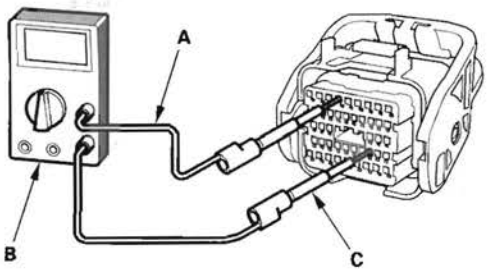

8. Gently contact the pin probe (male) at the terminal test port from the terminal side. Do not force the tips into the terminals.

NOTICE

- For accurate results, always use the pin probe (male).
- To prevent damage to the connector terminals, do not insert test equipment probes, paper clips, or other substitutes as they can damage the terminals. Damaged terminals cause a poor connection and an incorrect measurement.
- Do not puncture the insulation on a wire. Punctures can cause poor or intermittent electrical connections.

Updating the PCM

Special Tools Required
- Honda diagnostic system (HDS)
- Honda interface module (HIM)
- HDS pocket tester

NOTE:
- Use this procedure when you need to update the PCM during troubleshooting procedure.
- Make sure the HDS/HIM has the latest software version. Downloaded from the interactive network.
- Before you update the PCM, make sure the battery in the vehicle is fully charged and connect a jumper battery (not a battery charger) to maintain system voltage.
- Never turn the ignition switch OFF during the update. If there is a problem with the update, leave the ignition switch ON.
- To prevent PCM damage, do not operate anything electrical (headlights, audio system, brakes, A/C, power windows, moonroof (if equipped), door locks, etc.) during the update.
- To ensure the latest program is installed, do an PCM update whenever the PCM is substituted or replaced.
- You cannot update an PCM with a program it already has. It will only accept a new program.
- High temperature in the engine compartment might cause the PCM to become too hot to run the update. If the engine has been running before this procedure, open the hood and cool the engine compartment.
- If you need to diagnose the Honda interface module (HIM) because the HIM's red (#3) lamp came on or was flashing during the update, leave the ignition switch in the ON (II) position when you disconnect the HIM from the data link connector (DLC). This will prevent PCM damage.

1. Turn the ignition switch ON (II), but do not start the engine.
2. Connect the HDS to the data link connector (DLC) (A) located under the driver's side of the dashboard.

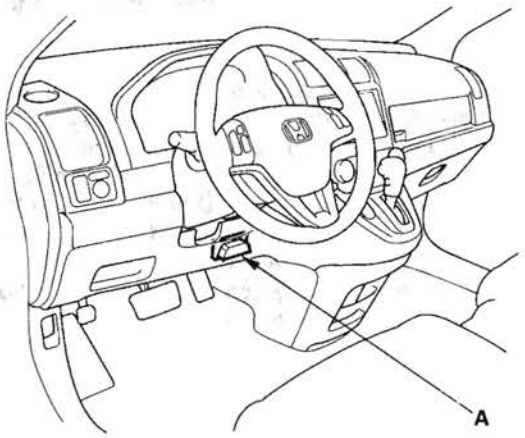

3. Make sure the HDS communicates with the PCM. If it doesn't, go to the DLC circuit troubleshooting (see page 11-197). If you are returning from the DLC circuit troubleshooting, skip steps 4 and 5, and clean the throttle body after updating the PCM (see page 11-338).
4. Select the INSPECTION MENU with the HDS.
5. Select the ETCS TEST, then select the TP POSITION CHECK, and follow the HDS screen prompts.

   NOTE: If the TP POSITION CHECK indicates FAILED, continue this procedure.
6. Exit the HDS diagnostic system, then select the update mode, and follow the screen prompts to update the PCM.

(cont'd)

General Troubleshooting Information (cont'd)

7. If the software in the PCM is the latest, disconnect the HDS/HIM from the DLC, and go back to the procedure that you were doing. If the software in the PCM is not the latest, follow the instructions on the screen. If prompted to choose the PGM-FI system or the A/T system, make sure you update both.

   NOTE: If the PCM update system requires you to cool the PCM, follow the instructions on screen. If you run into a problem during the update procedure, (programming takes over 15 minutes, status bar goes over 100 %, D or immobilizer light flashes, HDS tablet freezes, etc.), follow these steps to minimize the chance of damaging the PCM:
   - Leave the ignition switch in the ON (II) position.
   - Connect a jumper battery (do not connect a battery charger).
   - Shut down the HDS.
   - Disconnect the HDS from the DLC.
   - Reboot the HDS.
   - Reconnect the HDS to the DLC, and try the update procedure again.

8. If the TP POSITION CHECK failed in step 6, clean the throttle body (see page 11-338).

9. Do the PCM idle learn procedure (see page 11-304).

10. Do the CKP learn procedure.

Substituting the PCM

Special Tools Required
- Honda diagnostic system (HDS)
- Honda interface module (HIM)
- HDS pocket tester

NOTE: Use this procedure when you have to substitute a known-good PCM during troubleshooting procedure.

1. Connect the HDS to the data link connector (DLC) (A) located under the driver's side of the dashboard.

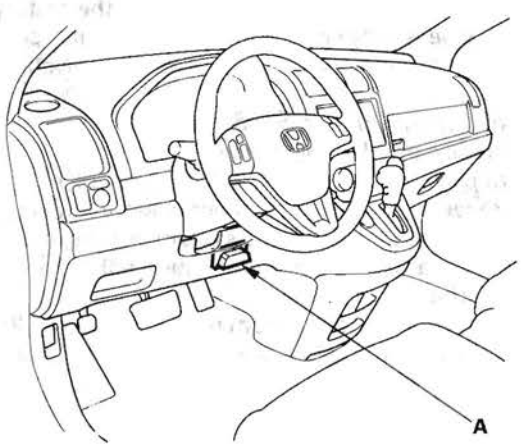

2. Turn the ignition switch ON (II).

3. Make sure the HDS communicates with the PCM. If it doesn't, go to the DLC circuit troubleshooting (see page 11-197). If you are returning from DLC circuit troubleshooting, skip steps 4 and 5, and the clean the throttle body after substituting the PCM (see page 11-338).

4. Select the INSPECTION MENU with the HDS.

5. Select the ETCS TEST, then select the TP POSITION CHECK, and follow the screen prompts.

   NOTE: If the TP POSITION CHECK indicates FAILED, continue this procedure.

6. Remove the under-hood fuse/relay box (A).

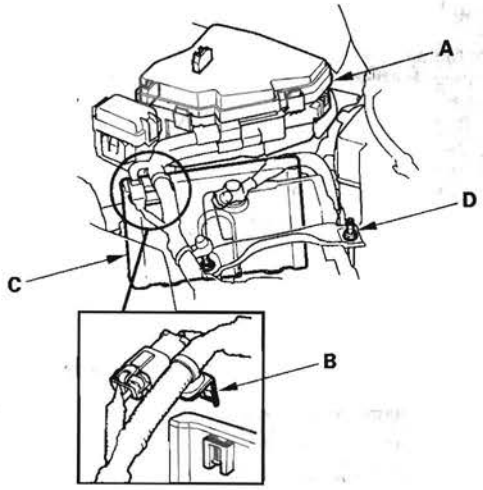

7. Remove the harness bracket (B).
8. Loosen the battery hold down bolt (D) and re-position the battery away from the PCM.
9. Remove the PCM cover (C).
10. Remove the bolts (D), then remove the PCM (E).

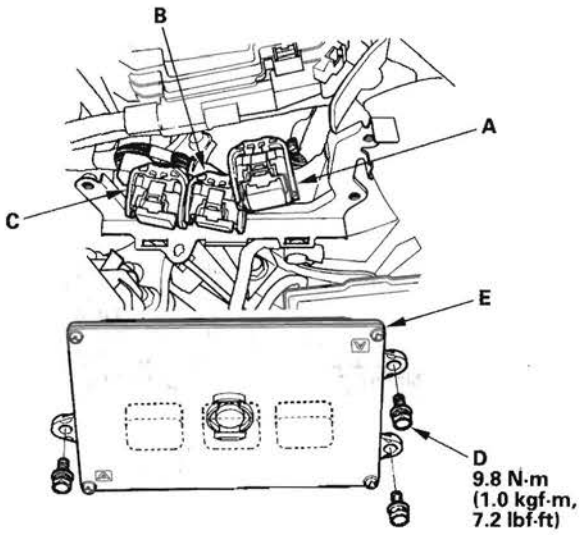

11. Disconnect the PCM connectors A, B, and C.

    NOTE: PCM connectors A, B, and C have symbols (A=□, B=△, C=○) embossed on them for identification.

12. Reinstall the parts in the reverse order of removal.
13. Turn the ignition switch ON (II).

    NOTE: DTC P0630 "VIN Not Programmed or Mismatch" may be stored because the VIN has not been programmed into the PCM; ignore it, and continue this procedure.

14. Manually input the VIN to the PCM with the HDS.
15. Update the PCM if it does not have the latest software.
16. Select the IMMOBI SYSTEM with the HDS.
17. Enter the immobilizer code using the PCM replacement procedure in the HDS; this allows you to start the engine.
18. Reset the PCM with the HDS.
19. If the TP POSITION CHECK failed in step 5, clean the throttle body (see page 11-338).
20. Do the PCM idle learn procedure (see page 11-304).
21. Do the CKP pattern learn procedure.

OBD Status

The OBD status shows the current system status of each DTC and all of the parameters. This function is used to see if the repair was successfully completed. The results of diagnostic tests for the DTC are displayed as:

- PASSED: The on board diagnosis is successfully finished.
- FAILED: The on board diagnosis has finished but failed.
- EXECUTING: The vehicle is in enable criteria conditions for the DTC and the on board diagnosis is running.
- NOT COMPLETED: The on board diagnosis was running but is out of the enable conditions of the DTC.
- OUT OF CONDITION: The vehicle has stayed out of the enable conditions for the DTC.

DTC Troubleshooting Index

DTC (MIL indication*)	Two Drive Cycle Detection	Detection Item	MIL	Note
P0010 (56)	—	Variable Valve Timing Control (VTC) Oil Control Solenoid Valve Malfunction	ON	(see page 11-264)
P0011 (56)	○	Variable Valve Timing Control (VTC) System Malfunction	ON	(see page 11-267)
P0101 (50)	○	Mass Air Flow (MAF) Sensor Range/Performance Problem	ON	(see page 11-62)
P0102 (50)	—	Mass Air Flow (MAF) Sensor Circuit Low Voltage	ON	(see page 11-64)
P0103 (50)	—	Mass Air Flow (MAF) Sensor Circuit High Voltage	ON	(see page 11-67)
P0107 (3)	—	Manifold Absolute Pressure (MAP) Sensor Circuit Low Voltage	ON	(see page 11-69)
P0108 (3)	—	Manifold Absolute Pressure (MAP) Sensor Circuit High Voltage	ON	(see page 11-71)
P0111 (10)	○	Intake Air Temperature (IAT) Sensor Circuit Range/Performance Problem	ON	(see page 11-74)
P0112 (10)	—	Intake Air Temperature (IAT) Sensor Circuit Low Voltage	ON	(see page 11-75)
P0113 (10)	—	Intake Air Temperature (IAT) Sensor Circuit High Voltage	ON	(see page 11-77)
P0116 (86)	○	Engine Coolant Temperature (ECT) Sensor 1 Range/Performance Problem	ON	(see page 11-80)
P0117 (6)	—	Engine Coolant Temperature (ECT) Sensor 1 Circuit Low Voltage	ON	(see page 11-81)
P0118 (6)	—	Engine Coolant Temperature (ECT) Sensor 1 Circuit High Voltage	ON	(see page 11-83)
P0122 (7)	—	Throttle Position (TP) Sensor A Circuit Low Voltage	ON	(see page 11-222)
P0123 (7)	—	Throttle Position (TP) Sensor A Circuit High Voltage	ON	(see page 11-224)
P0125 (86)	○	Engine Coolant Temperature (ECT) Sensor 1 Malfunction/Slow Response	ON	(see page 11-86)
P0128 (87)	○	Cooling System Malfunction	ON	(see page 11-87)
P0133 (61)	○	Air Fuel Ratio (A/F) Sensor (Sensor 1) Response Malfunction/Slow Response	ON	(see page 11-89)
P0134 (41)	○	Air Fuel Ratio (A/F) Sensor (Sensor 1) Heater System Malfunction	ON	(see page 11-90)
P0135 (41)	—	Air Fuel Ratio (A/F) Sensor (Sensor 1) Heater Circuit Malfunction	ON	(see page 11-91)
P0137 (63)	○	Secondary Heated Oxygen Sensor (Secondary HO2S (Sensor 2)) Circuit Low Voltage	ON	(see page 11-96)
P0138 (63)	○	Secondary Heated Oxygen Sensor (Secondary HO2S (Sensor 2)) Circuit High Voltage	ON	(see page 11-98)
P0139 (63)	○	Secondary Heated Oxygen Sensor (Secondary HO2S (Sensor 2)) Slow Response	ON	(see page 11-101)
P0141 (65)	—	Secondary Heated Oxygen Sensor (Secondary HO2S (Sensor 2)) Heater Circuit Malfunction	ON	(see page 11-102)
P0171 (45)	○	Fuel System Too Lean	ON	(see page 11-106)
P0172 (45)	○	Fuel System Too Rich	ON	(see page 11-106)
P0222 (7)	—	Throttle Position (TP) Sensor B Circuit Low Voltage	ON	(see page 11-227)
P0223 (7)	—	Throttle Position (TP) Sensor B Circuit High Voltage	ON	(see page 11-230)
P0300 (75) any combination of the following P0301 (71) P0302 (72) P0303 (73) P0304 (74)	○	Random Misfire Detected	ON	(see page 11-108)
P0301 (71)	○	No. 1 Cylinder Misfire Detected	ON	(see page 11-111)
P0302 (72)	○	No. 2 Cylinder Misfire Detected	ON	(see page 11-111)
P0303 (73)	○	No. 3 Cylinder Misfire Detected	ON	(see page 11-111)
P0304 (74)	○	No. 4 Cylinder Misfire Detected	ON	(see page 11-111)
P0325 (23)	—	Knock Sensor Circuit Malfunction	ON	(see page 11-120)
P0335 (4)	—	Crankshaft Position (CKP) Sensor No Signal	ON	(see page 11-122)
P0339 (4)	—	Crankshaft Position (CKP) Sensor Circuit Intermittent Interruption	ON	(see page 11-125)
P0340 (57)	—	Camshaft Position (CMP) Sensor A No Signal	ON	(see page 11-269)

NOTE: The above DTCs are indicated when the PGM-FI system is selected in the HDS. Some automatic transmission DTCs cause the MIL to come on. If the MIL is on and no DTCs are indicated in the PGM-FI system, select the A/T system, and check the automatic transmission DTCs.

*: These DTCs are indicated by a blinking MIL when the SCS line is jumped with the HDS.

DTC (MIL indication*)	Two Drive Cycle Detection	Detection Item	MIL	Note
P0341 (57)	—	Camshaft Position (CMP) Sensor and Crankshaft Position (CKP) Sensor Incorrect Phase Detected	ON	(see page 11-272)
P0344 (57)	—	Camshaft Position (CMP) Sensor A Intermittent Interruption	ON	(see page 11-274)
P0365 (8)	—	Camshaft Position (CMP) Sensor B No Signal	ON	(see page 11-126)
P0369 (8)	—	Camshaft Position (CMP) Sensor B Intermittent Interruption	ON	(see page 11-129)
P0401 (80)	○	Exhaust Gas Recirculation (EGR) Insufficient Flow	ON	(see page 11-350)
P0404 (12)	○	Exhaust Gas Recirculation (EGR) Valve Circuit Range/Performance Problem	ON	(see page 11-352)
P0406 (12)	—	Exhaust Gas Recirculation (EGR) Valve Position Sensor Circuit High Voltage	ON	(see page 11-355)
P0420 (67)	○	Catalyst System Efficiency Below Threshold	ON	(see page 11-346)
P0443 (92)	—	Evaporative Emission (EVAP) Canister Purge Valve Circuit Malfunction	ON	(see page 11-368)
P0451 (91)	○	Fuel Tank Pressure (FTP) Sensor Range/Performance Problem	ON	(see page 11-372)
P0452 (91)	—	Fuel Tank Pressure (FTP) Sensor Circuit Low Voltage	ON	(see page 11-373)
P0453 (91)	—	Fuel Tank Pressure (FTP) Sensor Circuit High Voltage	ON	(see page 11-376)
P0455 (90)	○	Evaporative Emission (EVAP) System Large Leak Detected	ON	(see page 11-379)
P0456 (90)	○	Evaporative Emission (EVAP) System Very Small Leak Detected	ON	(see page 11-379)
P0457 (90)	○	Evaporative Emission (EVAP) System Leak Detected/Fuel Fill Cap Loose or Missing	ON	(see page 11-382)
P0461 (121)	○	Fuel Level Sensor (Fuel Gauge Sending Unit) Range/Performance Problem	OFF	(see page 11-307)
P0462 (121)	—	Fuel Level Sensor (Fuel Gauge Sending Unit) Circuit Low Voltage	OFF	(see page 11-308)
P0463 (121)	—	Fuel Level Sensor (Fuel Gauge Sending Unit) Circuit High Voltage	OFF	(see page 11-310)
P0496 (92)	○	Evaporative Emission (EVAP) System High Purge Flow	ON	(see page 11-384)
P0497 (90)	○	Evaporative Emission (EVAP) System Low Purge Flow	ON	(see page 11-385)
P0498 (117)	—	Evaporative Emission (EVAP) Canister Vent Shut Valve Circuit Low Voltage	ON	(see page 11-388)
P0499 (117)	—	Evaporative Emission (EVAP) Canister Vent Shut Valve Circuit High Voltage	ON	(see page 11-391)
P0506 (14)	○	Idle Control System RPM Lower Than Expected	ON	(see page 11-288)
P0507 (14)	○	Idle Control System RPM Higher Than Expected	ON	(see page 11-290)
P0532 (191)	—	A/C Pressure Sensor Circuit Low Voltage	OFF	(see page 11-292)
P0533 (191)	—	A/C Pressure Sensor Circuit High Voltage	OFF	(see page 11-294)
P050A (167)	○	Cold Start Idle Air Control System Performance Problem	ON	(see page 11-130)
P050B (167)	○	Cold Start Ignition Timing Performance Problem	ON	(see page 11-132)
P0562 (34)	—	Charging System Low Voltage	OFF	(see page 11-135)
P0563 (34)	—	Powertrain Control Module (PCM) Power Source Circuit Unexpected Voltage	OFF	(see page 11-136)
P0602 (196)	—	Powertrain Control Module (PCM) Programming Error	ON	(see page 11-139)
P0606 (0)	—	Powertrain Control Module (PCM) Processor Malfunction	ON	(see page 11-139)
P060A (131)	—	Powertrain Control Module (PCM) (A/T System) Internal Control Module Malfunction	ON	(see page 11-140)
P062F (131)	—	Powertrain Control Module (PCM) Internal Control Module Keep Alive Memory (KAM) Error	ON	(see page 11-140)
P0630 (139)	—	VIN Not Programmed or Mismatch	ON	(see page 11-141)
P0685 (135)	○	Powertrain Control Module (PCM) Power Control Circuit/Internal Circuit Malfunction	ON	(see page 11-142)

NOTE: The above DTCs are indicated when the PGM-FI system is selected in the HDS. Some automatic transmission DTCs cause the MIL to come on. If the MIL is on and no DTCs are indicated in the PGM-FI system, select the A/T system, and check the automatic transmission DTCs.

*: These DTCs are indicated by a blinking MIL when the SCS line is jumped with the HDS.

(cont'd)

DTC Troubleshooting Index (cont'd)

DTC (MIL indication*)	Two Drive Cycle Detection	Detection Item	MIL	Note
P0720 (122)	—	Output Shaft (Countershaft) Speed Sensor Circuit Malfunction	ON	(see page 11-143)
P1009 (56)	○	Variable Valve Timing Control (VTC) Advance Malfunction	ON	(see page 11-275)
P1109 (13)	—	Barometric Pressure (BARO) Sensor Circuit Out of Range High	ON	(see page 11-145)
P1116 (86)	○	Engine Coolant Temperature (ECT) Sensor 1 Performance Problem	ON	(see page 11-146)
P1128 (5)	○	Manifold Absolute Pressure (MAP) Sensor Signal Lower Than Expected	ON	(see page 11-148)
P1129 (5)	○	Manifold Absolute Pressure (MAP) Sensor Signal Higher Than Expected	ON	(see page 11-149)
P1157 (48)	—	Air Fuel Ratio (A/F) Sensor (Sensor 1) AFS Circuit High Voltage	ON	(see page 11-151)
P1172 (157)	—	Air Fuel Ratio (A/F) Sensor (Sensor 1) Circuit Out of Range High	ON	(see page 11-153)
P1297 (20)	—	Electrical Load Detector (ELD) Circuit Low Voltage	OFF	(see page 11-154)
P1298 (20)	—	Electrical Load Detector (ELD) Circuit High Voltage	OFF	(see page 11-156)
P1454 (91)	○	Fuel Tank Pressure (FTP) Sensor Range/Performance Problem	ON	(see page 11-392)
P145C (90)	○	Evaporative Emission (EVAP) System Purge Flow (Vacuum Line)	ON	(see page 11-394)
P1549 (34)	—	Charging System High Voltage	OFF	(see page 11-158)
P1658 (40)	—	Electronic Throttle Control System (ETCS) Control Relay ON Malfunction	ON	(see page 11-233)
P1659 (40)	—	Electronic Throttle Control System (ETCS) Control Relay OFF Malfunction	ON	(see page 11-235)
P1683 (40)	—	Throttle Valve Default Position Spring Performance Problem	ON	(see page 11-239)
P1684 (40)	—	Throttle Valve Return Spring Performance Problem	ON	(see page 11-240)
P16BB (116)	—	Alternator B Terminal Circuit Low Voltage	OFF	(see page 11-159)
P16BC (116)	—	Alternator FR Terminal Circuit/IGP Circuit Low Voltage	OFF	(see page 11-160)
P2101 (40)	—	Electronic Throttle Control System (ETCS) Malfunction	ON	(see page 11-241)
P2118 (40)	—	Throttle Actuator Current Range/Performance Problem	ON	(see page 11-243)
P2122 (37)	—	Accelerator Pedal Position (APP) Sensor A (Throttle Position (TP) Sensor D) Circuit Low Voltage	ON	(see page 11-245)
P2123 (37)	—	Accelerator Pedal Position (APP) Sensor A (Throttle Position (TP) Sensor D) Circuit High Voltage	ON	(see page 11-248)
P2127 (37)	—	Accelerator Pedal Position (APP) Sensor B (Throttle Position (TP) Sensor E) Circuit Low Voltage	ON	(see page 11-250)
P2128 (37)	—	Accelerator Pedal Position (APP) Sensor B (Throttle Position (TP) Sensor E) Circuit High Voltage	ON	(see page 11-253)
P2135 (7)	—	Throttle Position (TP) Sensor A/B Voltage Incorrect Correlation	ON	(see page 11-255)
P2138 (37)	—	Accelerator Pedal Position (APP) Sensor A/B (Throttle Position (TP) Sensor D/E) Incorrect Voltage Correlation	ON	(see page 11-257)
P2176 (40)	—	Throttle Actuator Control System Idle Position Not Learned	ON	(see page 11-259)
P2183 (192)	○	Engine Coolant Temperature (ECT) Sensor 2 Range/Performance Problem	ON	(see page 11-163)
P2184 (192)	—	Engine Coolant Temperature (ECT) Sensor 2 Circuit Low Voltage	ON	(see page 11-165)
P2185 (192)	—	Engine Coolant Temperature (ECT) Sensor 2 Circuit High Voltage	ON	(see page 11-167)
P2195 (48)	○	Air Fuel Ratio (A/F) Sensor (Sensor 1) Signal Stuck Lean	ON	(see page 11-170)
P2227 (13)	○	Barometric Pressure (BARO) Sensor Range/Performance Problem	ON	(see page 11-172)
P2228 (13)	—	Barometric Pressure (BARO) Sensor Circuit Low Voltage	ON	(see page 11-173)
P2229 (13)	—	Barometric Pressure (BARO) Sensor Circuit High Voltage	ON	(see page 11-173)
P2238 (48)	—	Air Fuel Ratio (A/F) Sensor (Sensor 1) AFS+ Line Low Voltage	ON	(see page 11-174)
P2252 (48)	—	Air Fuel Ratio (A/F) Sensor (Sensor 1) AFS− Line Low Voltage	ON	(see page 11-176)

NOTE: The above DTCs are indicated when the PGM-FI system is selected in the HDS. Some automatic transmission DTCs cause the MIL to come on. If the MIL is on and no DTCs are indicated in the PGM-FI system, select the A/T system, and check the automatic transmission DTCs.

*: These DTCs are indicated by a blinking MIL when the SCS line is jumped with the HDS.

DTC (MIL indication*)	Two Drive Cycle Detection	Detection Item	MIL	Note
P2270 (63)	○	Secondary Heated Oxygen Sensor (Secondary HO2S (Sensor 2)) Circuit Signal Stuck Lean	ON	(see page 11-178)
P2271 (63)	○	Secondary Heated Oxygen Sensor (Secondary HO2S (Sensor 2)) Circuit Signal Stuck Rich	ON	(see page 11-178)
P2413 (12)	○	Exhaust Gas Recirculation (EGR) System Malfunction	ON	(see page 11-357)
P2422 (117)	○	Evaporative Emission (EVAP) Canister Vent Shut Valve Stuck Closed Malfunction	ON	(see page 11-392)
P2610 (132)	—	Powertrain Control Module (PCM) Ignition Off Internal Timer Performance Problem	ON	(see page 11-179)
P2646 (22)	—	Rocker Arm Oil Pressure Switch Circuit Low Voltage	ON	(see page 11-276)
P2647 (22)	—	Rocker Arm Oil Pressure Switch Circuit High Voltage	ON	(see page 11-278)
P2648 (21)	—	Rocker Arm Oil Control Solenoid Circuit Low Voltage	ON	(see page 11-280)
P2649 (21)	—	Rocker Arm Oil Control Solenoid Circuit High Voltage	ON	(see page 11-282)
P2A00 (61)	○	Air Fuel Ratio (A/F) Sensor (Sensor 1) Range/Performance Problem	ON	(see page 11-180)
U0028 (126)	—	F-CAN Malfunction (BUS-OFF (Powertrain Control Module (PCM)))	ON	(see page 11-181)
U0122 (126)	—	F-CAN Malfunction (Powertrain Control Module (PCM)-VSA Control Module Unit)	OFF	(see page 11-182)
U0155 (126)	—	F-CAN Malfunction (Powertrain Control Module (PCM)-Gauge Control Module)	ON	(see page 11-184)
U0300 (131)	—	PGM-FI System and A/T System Program Version Mismatch	ON	(see page 11-186)

NOTE: The above DTCs are indicated when the PGM-FI system is selected in the HDS. Some automatic transmission DTCs cause the MIL to come on. If the MIL is on and no DTCs are indicated in the PGM-FI system, select the A/T system, and check the automatic transmission DTCs.

*: These DTCs are indicated by a blinking MIL when the SCS line is jumped with the HDS.

Symptom Troubleshooting Index

When the vehicle has one of these symptoms, check for a diagnostic trouble code (DTC) with the HDS. If there is no DTC, do the diagnostic procedure for the symptom, in the sequence listed, until you find the cause.

Symptom	Diagnostic procedure	Also check for
Engine will not start (MIL works OK, no DTCs set)	1. Test the battery (see page 22-65). 2. Test the starter (see page 4-8). 3. Check the fuel pressure (see page 11-319). 4. Troubleshoot the fuel pump circuit (see page 11-313).	• Low compression • No ignition spark • Intake air leaks • Locked up engine • Broken cam chain • Contaminated fuel
Engine will not start (MIL comes on and stays on, or never comes on at all, no DTCs set)	Troubleshoot the DLC circuit (see page 11-197).	• Low compression • No ignition spark • Intake air leaks • Locked up engine • Broken cam chain • Contaminated fuel • No power to PCM • No ground to PCM • Shorted reference voltage
MIL comes on and stays on, or never comes on at all, no DTCs set	Troubleshoot the MIL circuit (see page 11-196).	
Engine will not start (MIL works OK, no DTCs set, immobilizer indicator stays on or flashes)	Check the immobilizer system.	
Engine starts but stalls immediately (MIL works OK, no DTCs set, immobilizer indicator stays on or flashes)	Check the immobilizer system.	
Engine is hard to start (MIL works OK, no DTCs set)	1. Test the battery (see page 22-65). 2. Check the fuel pressure (see page 11-319). 3. Clean the throttle body (see page 11-338).	• Low compression • Intake air leaks • Contaminated fuel • Weak spark
Cold fast idle too low (MIL works OK, no DTCs set)	1. Do the PCM idle learn procedure (see page 11-304). 2. Check the idle speed (see page 11-303). 3. Clean the throttle body (see page 11-338).	
Cold fast idle too high (MIL works OK, no DTCs set)	1. Do the PCM idle learn procedure (see page 11-304). 2. Check the idle speed (see page 11-303). 3. Do the throttle position learning check (see page 11-338).	
Idle speed fluctuates (MIL works OK, no DTCs set)	1. Do the PCM idle learn procedure (see page 11-304). 2. Check the idle speed (see page 11-303). 3. Do the carbon accumulation check (see page 11-338).	Intake vacuum leaks

Symptom	Diagnostic procedure	Also check for
After warming up, idle speed is below specification without load (MIL works OK, no DTCs set)	1. Troubleshoot the alternator FR signal circuit (see page 11-298). 2. Do the carbon accumulation check (see page 11-338).	
After warming up, idle speed is above specification without load (MIL works OK, no DTCs set)	1. Troubleshoot the alternator FR signal circuit (see page 11-298). 2. Inspect the APP sensor (see page 11-261).	
After warming up, idle speed drops when steering wheel is turning (MIL works OK, no DTCs set)	1. Do the PCM idle learn procedure (see page 11-304). 2. Troubleshoot the PSP switch signal circuit (see page 11-299). 3. Do the carbon accumulation check (see page 11-338).	Power steering system
Low power (MIL works OK, no DTCs set)	Check the fuel pressure (see page 11-319).	• Low compression • Incorrect camshaft timing • Incorrect engine oil level
Engine stalls (MIL works OK, no DTCs set)	1. Do the PCM idle learn procedure (see page 11-304). 2. Check the fuel pressure (see page 11-319). 3. Check the idle speed (see page 11-303). 4. Troubleshoot the brake pedal position switch signal circuit (see page 11-301).	• Intake air leaks • Faulty harness and sensor connections
Difficult to refuel (MIL works OK, no DTCs set)	1. Check the fuel vent tube between the EVAP canister and the fuel tank. 2. Check the fuel tank vapor recirculation tube between the fuel pipe and the fuel tank. 3. Replace the fuel tank (see page 11-333).	Malfunctioning gas station filling nozzle.
Fuel overflows during refueling (No DTCs set)	Replace the fuel tank (see page 11-333).	Malfunctioning gas station filling nozzle.
HDS does not communicate with the PCM or the vehicle	Troubleshoot the DLC circuit (see page 11-197).	

System Description

Electronic Control System

The functions of the fuel and emission control systems are managed by the powertrain control module (PCM).

Self-diagnosis
The PCM detects a failure of a signal from a sensor or from another control unit and stores a Temporary DTC or a DTC. Depending on the failure, a DTC is stored in either the first or the second drive cycle. When a DTC is stored, the PCM turns on the malfunction indicator lamp (MIL) by a signal sent to the gauge via F-CAN.

- **One Drive Cycle Detection Method**
  When an abnormality occurs in the signal from a sensor or from another control unit, the PCM stores a DTC for the failure and turns on the MIL immediately.
- **Two Drive Cycle Detection Method**
  When an abnormality occurs in the signal from a sensor or from another control unit in the first drive cycle, the PCM stores a Temporary DTC. The MIL does not come on at this time. If the failure continues in the second drive cycle, the PCM stores a DTC and turns on the MIL.

Fail-safe Function
When an abnormality occurs in the signal from a sensor or from another control unit, the PCM ignores that signal and substitute a pre-programmed value for them that allows the engine to continue running. This causes a DTC to be stored and the MIL to come on.

MIL Bulb Check and Readiness Code Condition
When the ignition switch is turned ON (II), the PCM turns on the MIL via the F-CAN circuit for about 15 to 20 seconds to check the bulb condition. If any readiness codes are not set to complete, the MIL flashes five times. If all readiness codes are set to complete, the MIL goes off.

Self Shut Down (SSD) Mode
After the ignition switch is turned OFF, the PCM stays on (up to 15 minutes). If the PCM connector is disconnected during this time, the PCM may be damaged. To cancel this mode, disconnect the negative cable from the battery or jump the SCS line with the HDS after the ignition switch is turned OFF.

PCM Electrical Connections

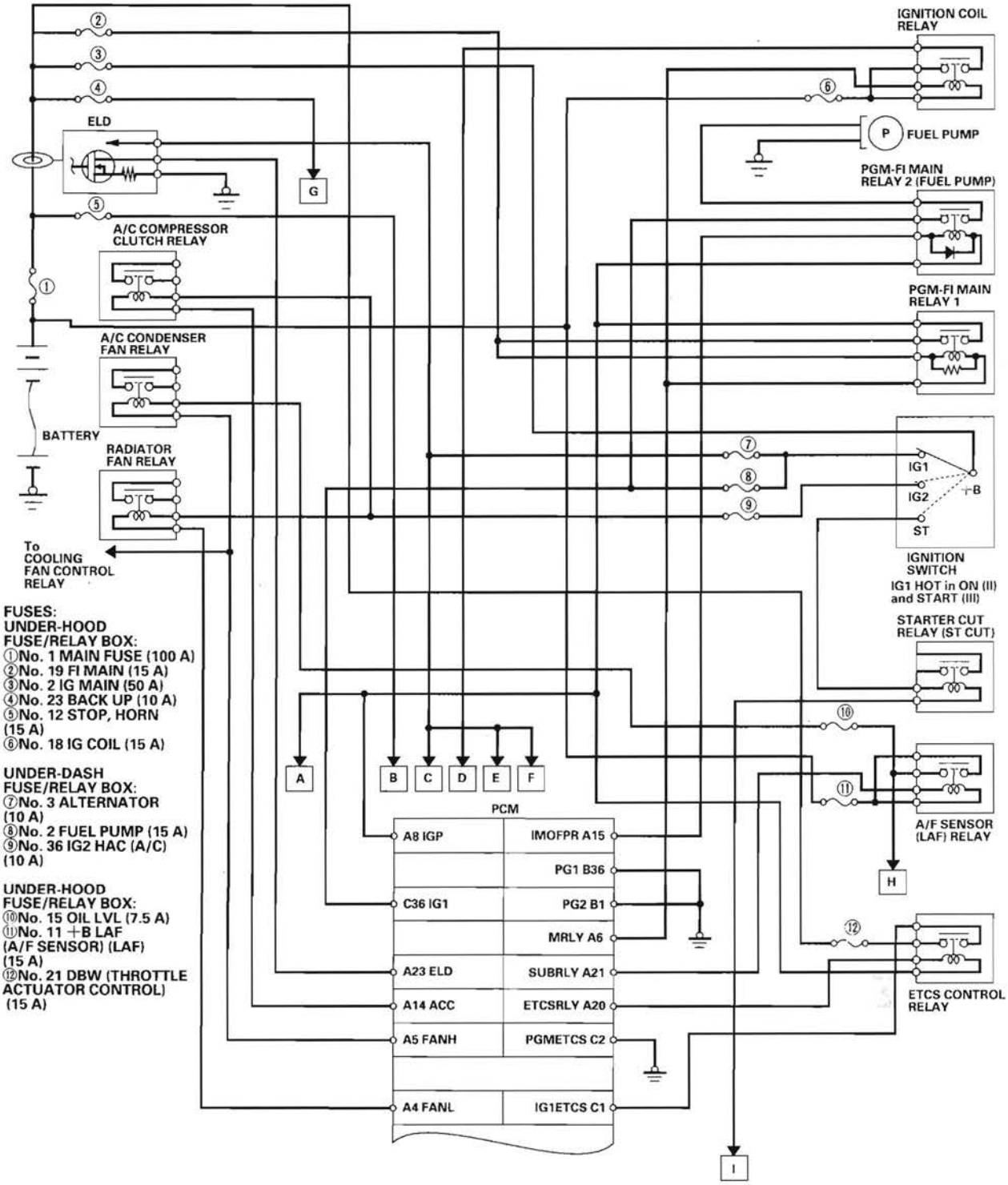

(cont'd)

System Description (cont'd)

PCM Electrical Connections (cont'd)

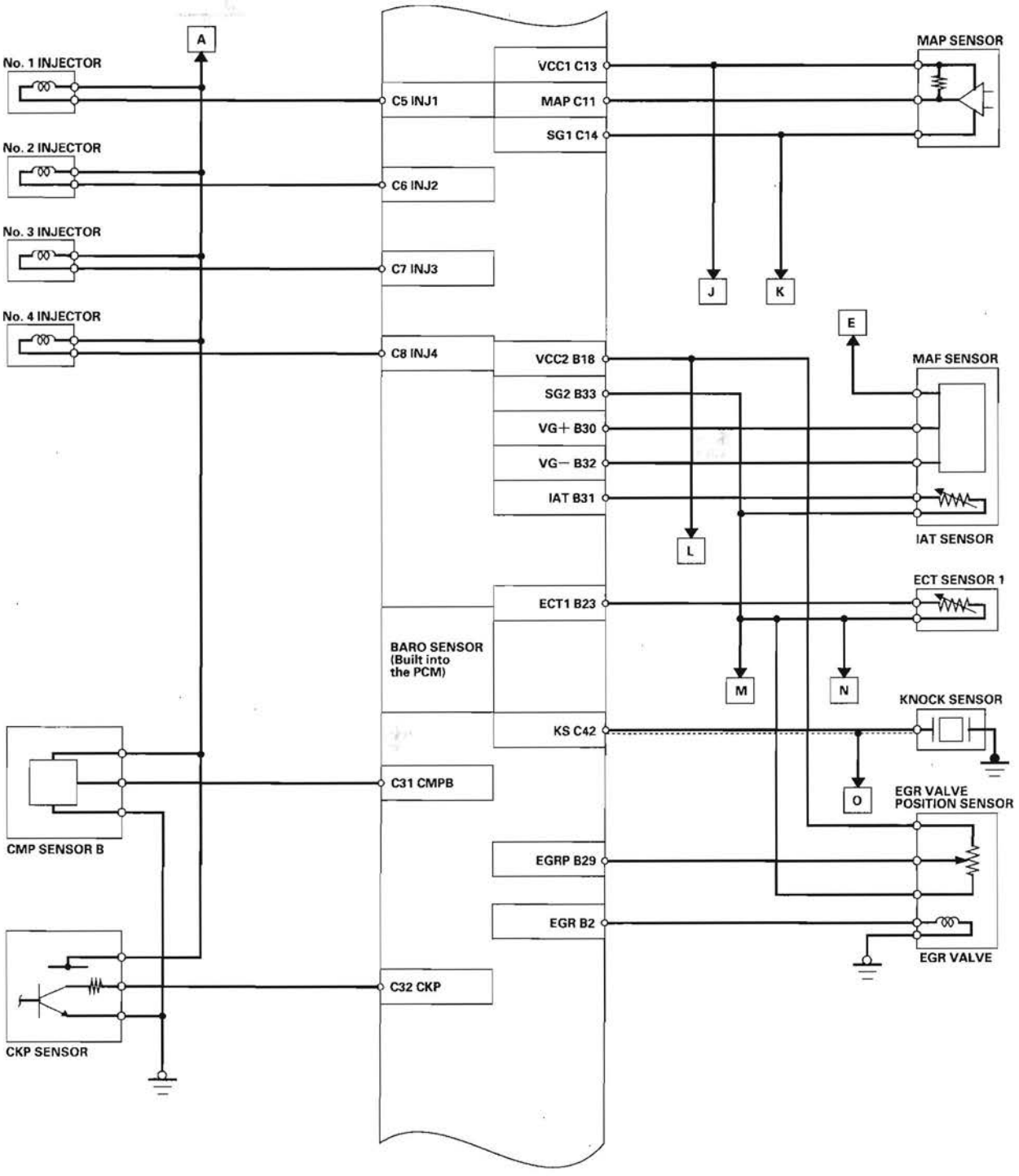

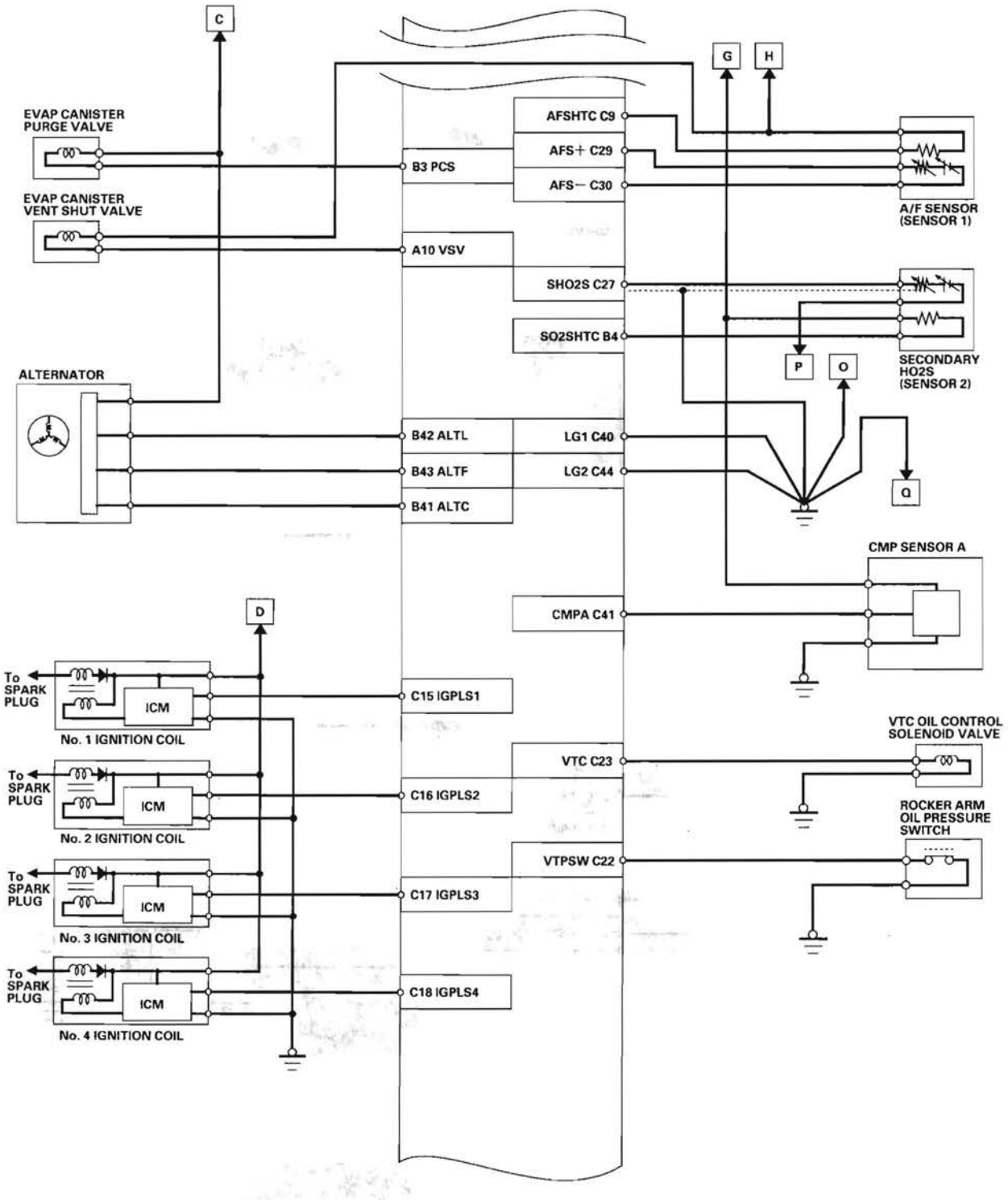
C
G
H
EVAP CANISTER PURGE VALVE
EVAP CANISTER VENT SHUT VALVE
B3 PCS
A10 VSV
AFSHTC C9
AFS+ C29
AFS− C30
A/F SENSOR (SENSOR 1)
SHO2S C27
SO2SHTC B4
SECONDARY HO2S (SENSOR 2)
P
O
Q
ALTERNATOR
B42 ALTL
B43 ALTF
B41 ALTC
LG1 C40
LG2 C44
CMP SENSOR A
CMPA C41
D
To SPARK PLUG
ICM
No. 1 IGNITION COIL
No. 2 IGNITION COIL
No. 3 IGNITION COIL
No. 4 IGNITION COIL
C15 IGPLS1
C16 IGPLS2
C17 IGPLS3
C18 IGPLS4
VTC OIL CONTROL SOLENOID VALVE
VTC C23
ROCKER ARM OIL PRESSURE SWITCH
VTPSW C22

(cont'd)

System Description (cont'd)

PCM Electrical Connections (cont'd)

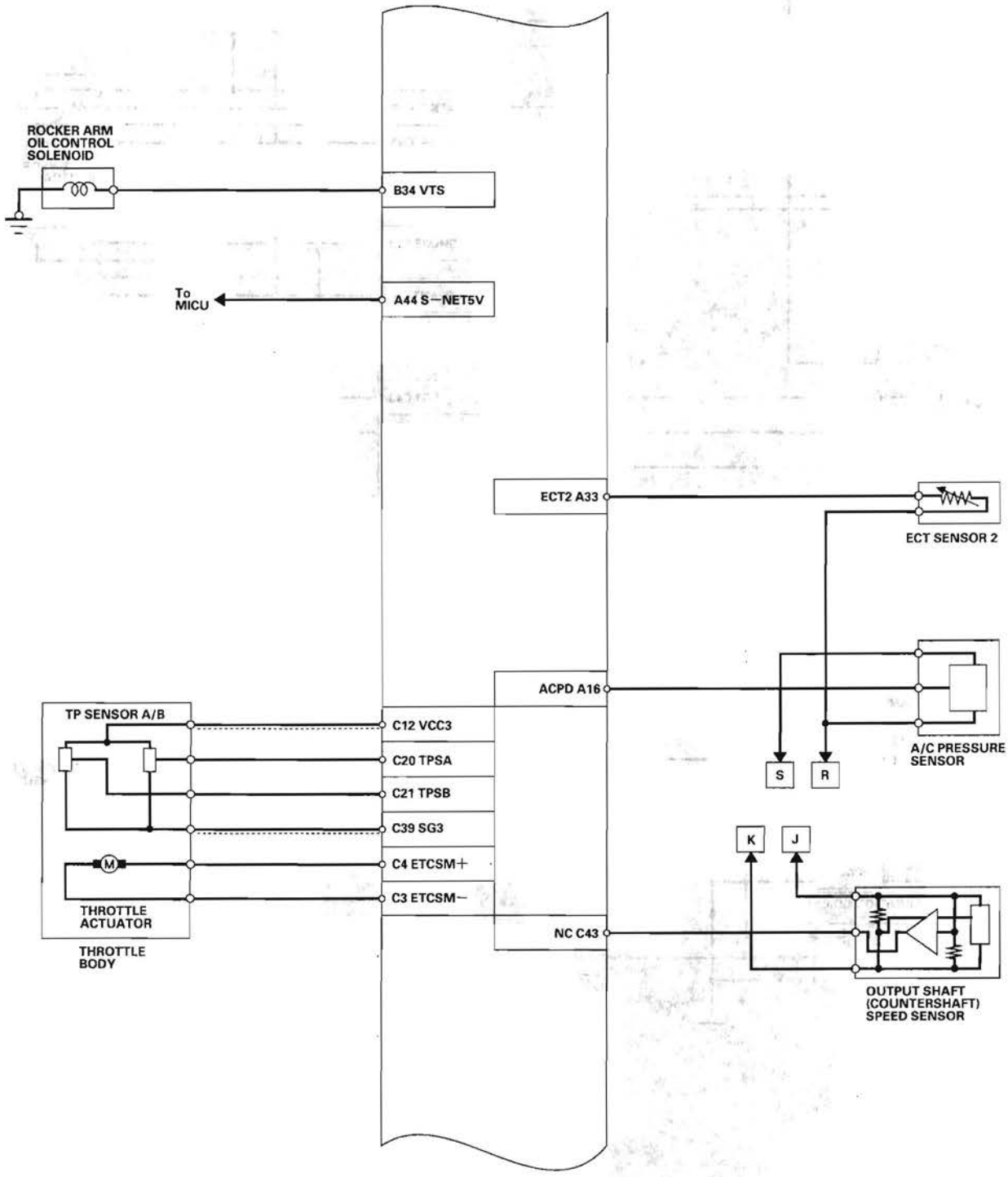

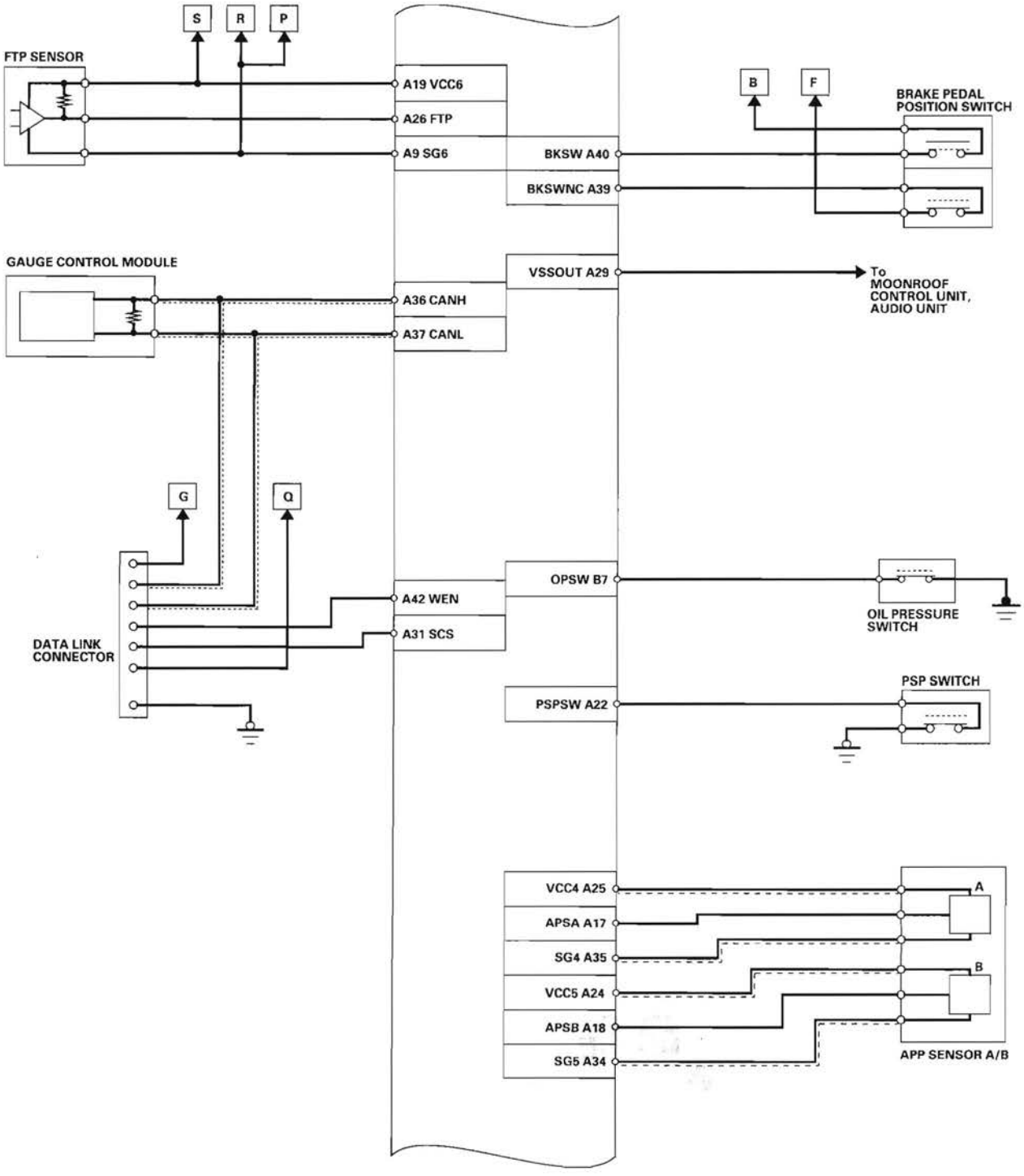
S
R
P
FTP SENSOR
A19 VCC6
A26 FTP
A9 SG6
B
F
BRAKE PEDAL POSITION SWITCH
BKSW A40
BKSWNC A39
GAUGE CONTROL MODULE
VSSOUT A29
To MOONROOF CONTROL UNIT, AUDIO UNIT
A36 CANH
A37 CANL
G
Q
DATA LINK CONNECTOR
OPSW B7
A42 WEN
A31 SCS
OIL PRESSURE SWITCH
PSP SWITCH
PSPSW A22
VCC4 A25
APSA A17
SG4 A35
VCC5 A24
APSB A18
SG5 A34
A
B
APP SENSOR A/B

(cont'd)

System Description (cont'd)

PCM Electrical Connections (cont'd)

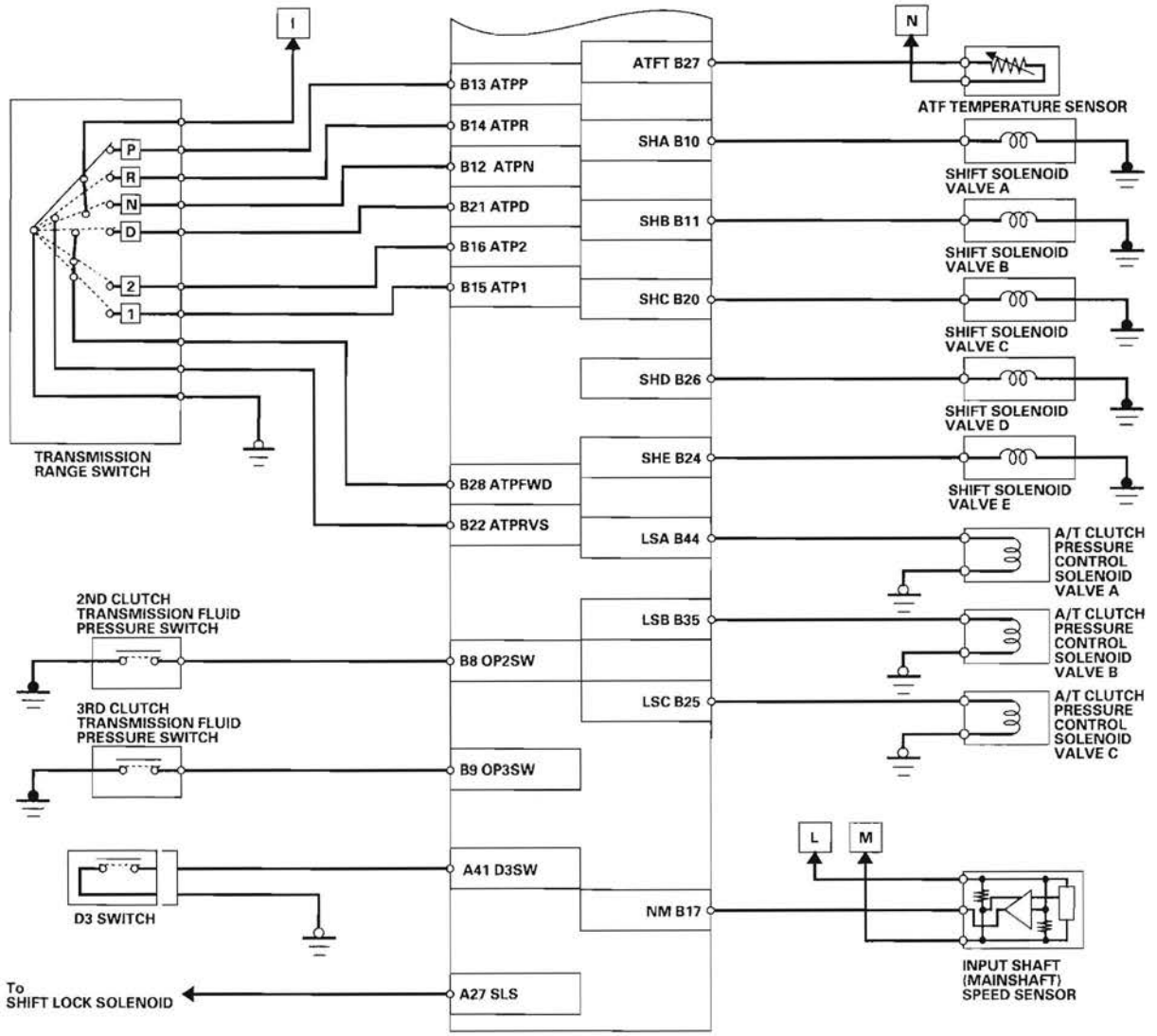

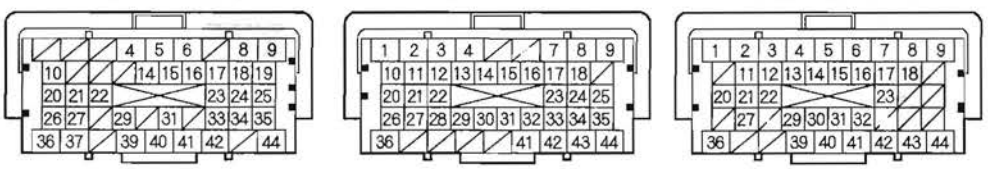

TERMINAL LOCATIONS

Vacuum Hose Routing

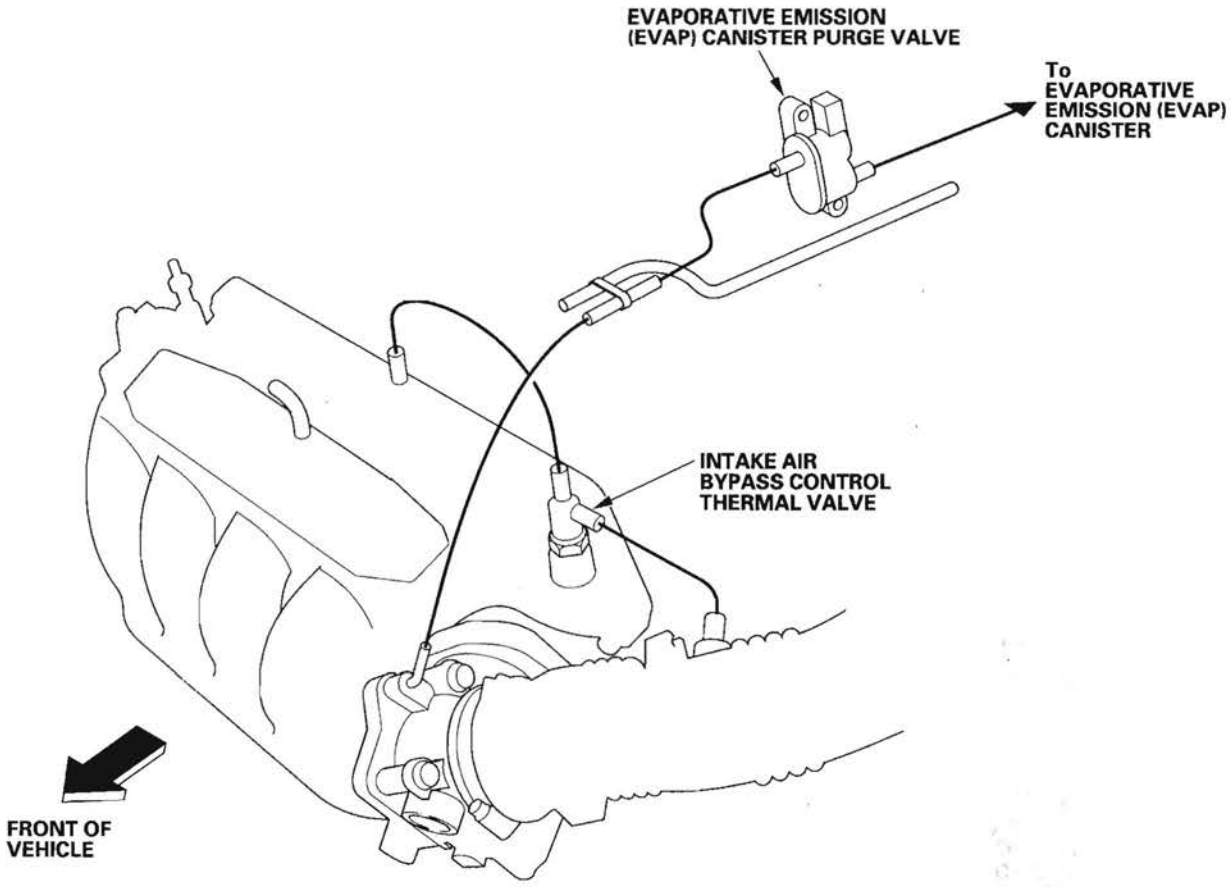

(cont'd)

System Description (cont'd)

Vacuum Distribution

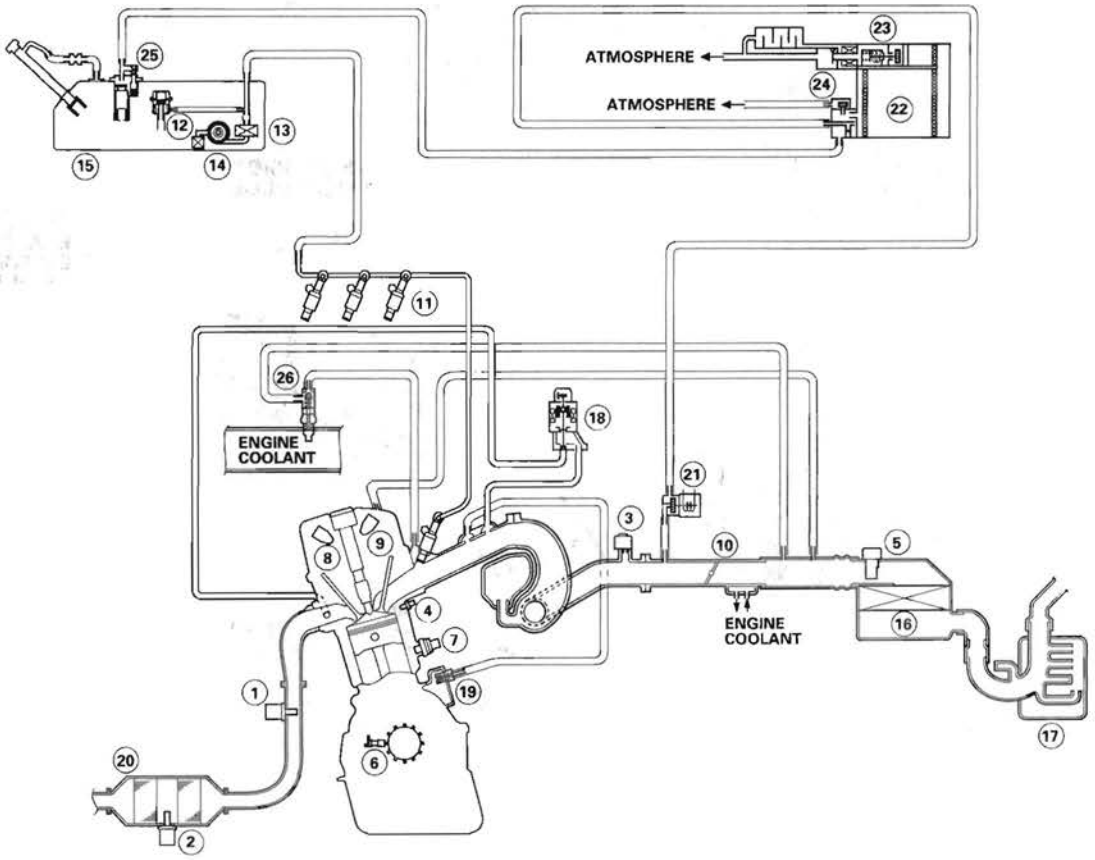

① AIR FUEL RATIO (A/F) SENSOR (SENSOR 1)
② SECONDARY HEATED OXYGEN SENSOR (SECONDARY HO2S) (SENSOR 2)
③ MANIFOLD ABSOLUTE PRESSURE (MAP) SENSOR
④ ENGINE COOLANT TEMPERATURE (ECT) SENSOR 1
⑤ MASS AIR FLOW (MAF) SENSOR and INTAKE AIR TEMPERATURE (IAT) SENSOR
⑥ CRANKSHAFT POSITION (CKP) SENSOR
⑦ KNOCK SENSOR
⑧ CAMSHAFT POSITION (CMP) SENSOR B
⑨ CAMSHAFT POSITION (CMP) SENSOR A
⑩ THROTTLE BODY
⑪ INJECTOR
⑫ FUEL PRESSURE REGULATOR
⑬ FUEL FILTER
⑭ FUEL PUMP
⑮ FUEL TANK
⑯ AIR CLEANER
⑰ RESONATOR
⑱ EXHAUST GAS RECIRCULATION (EGR) VALVE and POSITION SENSOR
⑲ POSITIVE CRANKCASE VENTILATION (PCV) VALVE
⑳ THREE WAY CATALYTIC CONVERTER
㉑ EVAPORATIVE EMISSION (EVAP) CANISTER PURGE VALVE
㉒ EVAPORATIVE EMISSION (EVAP) CANISTER
㉓ EVAPORATIVE EMISSION (EVAP) CANISTER VENT SHUT VALVE
㉔ FUEL TANK PRESSURE (FTP) SENSOR
㉕ FUEL TANK VAPOR CONTROL VALVE
㉖ INTAKE AIR BYPASS CONTROL THERMAL VALVE

PCM Inputs and Outputs at Connector A (□) (44P)

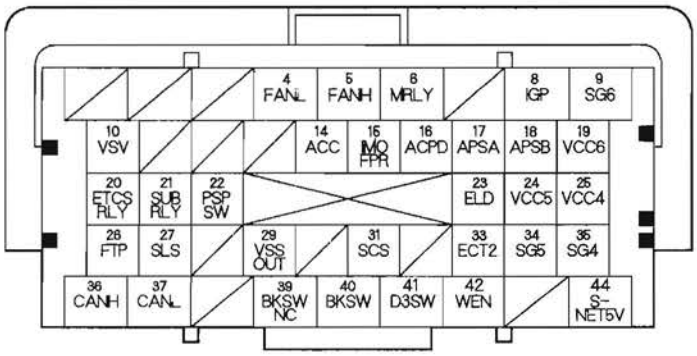

Terminal side of female terminals

NOTE: Standard battery voltage is about 12 V.

Terminal number	Wire color	Terminal name	Description	Signal
4	PUR	FANL (RADIATOR FAN CONTROL)	Drives radiator fan relay	With radiator fan running: about 0 V With radiator fan stopped: battery voltage
5	GRY	FANH (RADIATOR FAN CONTROL)	Drives A/C condenser fan relay	With A/C condenser fan running: about 0 V With A/C condenser fan stopped: battery voltage
6	GRN	MRLY (PGM-FI MAIN RELAY 1)	Drives PGM-FI main relay 1 Power source for DTC memory	With ignition switch ON (II): about 0 V With ignition switch OFF: battery voltage
8	ORN	IGP (POWER SOURCE)	Power source for PCM circuit	With ignition switch ON (II): battery voltage
9	BLK	SG6 (SENSOR GROUND)	Sensor ground	Less than 0.5 V at all times
10	GRY	VSV (EVAPORATIVE EMISSION (EVAP) CANISTER VENT SHUT VALVE)	Drives EVAP canister vent shut valve	With ignition switch ON (II): battery voltage
14	RED	ACC (A/C COMPRESSOR CLUTCH RELAY)	Drives A/C compressor clutch relay	With compressor ON: about 0 V With compressor OFF: battery voltage
15	BRN	IMOFPR (IMMOBILIZER FUEL PUMP RELAY)	Drives PGM-FI main relay 2 (FUEL PUMP)	About 0 V for 2 seconds after turning ignition switch ON (II), then battery voltage With the engine running: about 0 V
16	LT GRN	ACPD (A/C PRESSURE SENSOR)	Detects A/C pressure sensor signal	With A/C switch ON: about 1.7—4.8 V (depending on A/C pressure)
17	ORN	APSA (ACCELERATOR PEDAL POSITION (APP) SENSOR A)	Detects APP sensor A signal	With ignition switch ON (II) and accelerator pedal pressed: about 4.1 V With ignition switch ON (II) and accelerator pedal released: about 1.0 V
18	PUR	APSB (ACCELERATOR PEDAL POSITION (APP) SENSOR B)	Detects APP sensor B signal	With ignition switch ON (II) and accelerator pedal pressed: about 2.4 V With ignition switch ON (II) and accelerator pedal released: about 0.5 V
19	RED	VCC6 (SENSOR VOLTAGE)	Provides sensor reference voltage	With ignition switch ON (II): about 5.0 V
20	YEL	ETCSRLY (ELECTRONIC THROTTLE CONTROL SYSTEM (ETCS) CONTROL RELAY)	Drives electronic throttle control system (ETCS) control relay	With ignition switch ON (II): about 0 V
21	LT BLU	SUBRLY (AIR FUEL RATIO (A/F) SENSOR RELAY)	Drives A/F sensor relay	With ignition switch ON (II): about 0 V
22	ORN	PSPSW (POWER STEERING PRESSURE SWITCH SIGNAL)	Detects PSP switch signal	At idle with steering wheel in straight ahead position: about 0 V At idle with steering wheel at full lock: battery voltage
23	ORN	ELD (ELECTRICAL LOAD DETECTOR (ELD))	Detects ELD signal	With ignition switch ON (II): about 0.1—4.8 V (depending on electrical load)

(cont'd)

System Description (cont'd)

PCM Inputs and Outputs at Connector A (□) (44P)

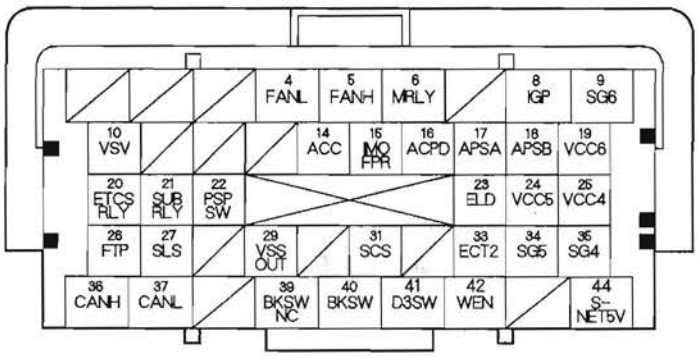

Terminal side of female terminals

NOTE: Standard battery voltage is about 12 V.

Terminal number	Wire color	Terminal name	Description	Signal
24	LT GRN	VCC5 (SENSOR VOLTAGE)	Provides sensor reference voltage	With ignition switch ON (II): about 5.0 V
25	BRN	VCC4 (SENSOR VOLTAGE)	Provides sensor reference voltage	With ignition switch ON (II): about 5.0 V
26	WHT	FTP (FUEL TANK PRESSURE (FTP) SENSOR)	Detects FTP sensor signal	With ignition switch ON (II) and fuel fill cap removed: about 2.5 V
27	RED	SLS (SHIFT LOCK SOLENOID)	Drives shift lock solenoid	With ignition switch ON (II), in P position, brake pedal pressed, and accelerator released: battery voltage
29	BLU	VSSOUT (VEHICLE SPEED SIGNAL OUTPUT)	Sends vehicle speed sensor signal	Depending on vehicle speed: pulses
31	BRN	SCS (SERVICE CHECK SIGNAL)	Detects service check signal	With service check signal shorted using the HDS: about 0 V With service check signal opened: about 5.0 V
33	GRN	ECT2 (ENGINE COOLANT TEMPERATURE (ECT) SENSOR 2)	Detects ECT sensor 2 signal	With ignition switch ON (II): about 0.1—4.8 V (depending on engine coolant temperature)
34	BLU	SG5 (SENSOR GROUND)	Sensor ground	Less than 0.5 V at all times
35	LT BLU	SG4 (SENSOR GROUND)	Sensor ground	Less than 0.5 V at all times
36	WHT	CANH (CAN COMMUNICATION SIGNAL HIGH)	Sends communication signal	With ignition switch ON (II): pulses (about 2.5 V)
37	RED	CANL (CAN COMMUNICATION SIGNAL LOW)	Sends communication signal	With ignition switch ON (II): pulses (about 2.5 V)

PCM Inputs and Outputs at Connector A (□) (44P)

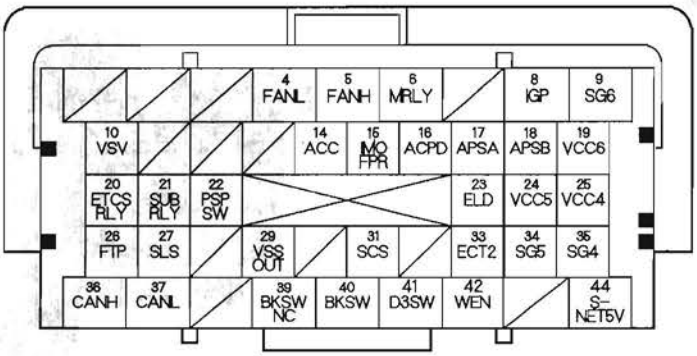

Terminal side of female terminals

NOTE: Standard battery voltage is about 12 V.

Terminal number	Wire color	Terminal name	Description	Signal
39	BRN	BKSWNC (BRAKE PEDAL POSITION SWITCH)	Detects brake pedal position switch signal	With ignition switch ON (II) and brake pedal released: battery voltage With ignition switch ON (II) and brake pedal pressed: about 0 V
40	LT GRN	BKSW (BRAKE PEDAL POSITION SWITCH)	Detects brake pedal position switch signal	With brake pedal released: about 0 V With brake pedal pressed: battery voltage
41	BLU	D3SW (D3 SWITCH)	Detects D3 switch	With D3 switch ON (II): about 0 V With D3 switch OFF: battery voltage
42	PNK	WEN (WRITE ENABLE SIGNAL)	Detects write enable signal	With ignition switch ON (II): about 0 V
44	GRN	S-NET5V (SERIAL COMMUNICATION FOR IMMOBILIZER)	Sends serial communication signal	With ignition switch ON (II): pulses With ignition switch OFF: about 5.0 V

(cont'd)

System Description (cont'd)

PCM Inputs and Outputs at Connector B (△) (44P)

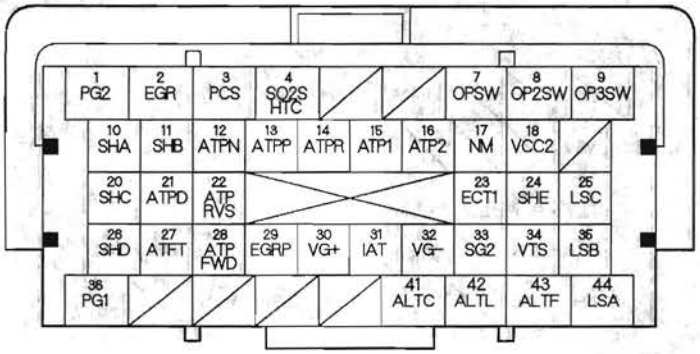

Terminal side of female terminals

NOTE: Standard battery voltage is about 12 V.

Terminal number	Wire color	Terminal name	Description	Signal
1	BLK	PG2 (POWER GROUND)	Ground circuit for PCM circuit	Less than 0.5 V at all times
2	BLU/RED	EGR (EXHAUST GAS RECIRCULATION (EGR) VALVE)	Drives EGR valve	With EGR operating: duty controlled With EGR not operating: about 0 V
3	YEL/BLU	PCS (EVAPORATIVE EMISSION (EVAP) CANISTER PURGE VALVE)	Drives EVAP canister purge valve	With engine running, engine coolant below 140 °F (60 °C): battery voltage With engine running, engine coolant above 140 °F (60 °C): duty controlled
4	BLK/WHT	SO2SHTC (SECONDARY HEATED OXYGEN SENSOR (SECONDARY HO2S) HEATER (SENSOR 2))	Drives secondary HO2S heater (sensor 2)	With ignition switch ON (II): battery voltage With fully warmed up engine running: duty controlled
7	YEL/RED	OPSW (OIL PRESSURE SWITCH)	Detects engine oil pressure signal	With ignition switch OFF: about 0 V With engine running: battery voltage
8	BLU/RED	OP2SW (2ND CLUTCH TRANSMISSION FLUID PRESSURE SWITCH)	Detects 2nd clutch transmission fluid pressure switch input	With ignition switch ON (II): Without 2nd clutch pressure: about 5.0 V With 2nd clutch pressure: about 0 V
9	BLU/WHT	OP3SW (3RD CLUTCH TRANSMISSION FLUID PRESSURE SWITCH)	Detects 3rd clutch transmission fluid pressure switch input	With ignition switch ON (II): Without 3rd clutch pressure: about 5.0 V With 3rd clutch pressure: about 0 V
10	BLU/BLK	SHA (SHIFT SOLENOID VALVE A)	Drives shift solenoid valve A	With engine running in R position, D position (in 1st, 4th, or 5th gears): battery voltage With engine running in P, N positions, and D position (in 2nd and 3rd gears): about 0 V
11	GRN/WHT	SHB (SHIFT SOLENOID VALVE B)	Drives shift solenoid valve B	With engine running in P, R, and N positions, and D position (in 1st and 2nd gears): battery voltage With engine running in D position (in 3rd, 4th, 5th gears): about 0 V
12	RED/BLK	ATPN (TRANSMISSION RANGE SWITCH NEUTRAL)	Detects transmission range switch N position signal input	In N position: about 0 V In any position other than N position: about 5.0 V
13	BLU/BLK	ATPP (TRANSMISSION RANGE SWITCH PARK)	Detects transmission range switch Park position signal input	In P position: about 0 V In any position other than P position: battery voltage
14	WHT	ATPR (TRANSMISSION RANGE SWITCH R)	Detects transmission range switch R position signal input	In R position: about 0 V In any position other than R position: battery voltage
15	RED	ATP1 (TRANSMISSION RANGE SWITCH 1 POSITION)	Detects transmission range switch 1 position signal input	In 1 position: about 0 V In any position other than 1 position: battery voltage

PCM Inputs and Outputs at Connector B (△) (44P)

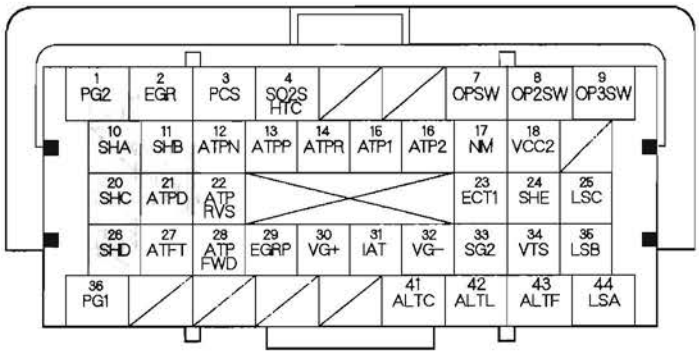

Terminal side of female terminals

NOTE: Standard battery voltage is about 12 V.

Terminal number	Wire color	Terminal name	Description	Signal
16	GRN/RED	ATP2 (TRANSMISSION RANGE SWITCH 2 POSITION)	Detects transmission range switch 2 position signal input	In 2 positions: about 0 V In any position other than 2 position: battery voltage
17	WHT/RED	NM (INPUT SHAFT (MAINSHAFT) SPEED SENSOR)	Detects input shaft (mainshaft) speed sensor signal	With ignition switch ON (II): about 0 V With engine idling in N position: about 2.5 V
18	YEL/BLU	VCC2 (SENSOR VOLTAGE)	Provides sensor voltage	With ignition switch ON (II): about 5.0 V
20	GRN	SHC (SHIFT SOLENOID VALVE C)	Drives shift solenoid valve C	With engine running in N and D positions (in 1st, 3rd, and 5th gears): battery voltage With engine running in P and R positions, and D position (in 2nd and 4th gears): about 0 V
21	YEL/GRN	ATPD (TRANSMISSION RANGE SWITCH D)	Detects transmission range switch D position signal input	In D position: about 0 V In any other position: battery voltage
22	RED/WHT	ATPRVS (TRANSMISSION RANGE SWITCH R)	Detects transmission range switch R position signal input	In R position: about 0 V In any other position: battery voltage
23	RED/WHT	ECT1 (ENGINE COOLANT TEMPERATURE (ECT) SENSOR 1)	Detects ECT sensor 1 signal	With ignition switch ON (II): about 0.1—4.8 V (depending on engine coolant temperature)
24	YEL	SHE (SHIFT SOLENOID VALVE E)	Drives shift solenoid valve E	With engine running in P and R positions: battery voltage With engine running in N position, and D position (in 1st gear): about 0 V
25	BLU/YEL	LSC (A/T CLUTCH PRESSURE CONTROL SOLENOID VALVE C)	Drives A/T clutch pressure control solenoid valve C	With ignition switch ON (II): pulses
26	GRN/RED	SHD (SHIFT SOLENOID VALVE D)	Drives shift solenoid valve D	With engine running in D position (in 2nd and 5th gears): battery voltage With engine running in P, R, and N positions, and D position (in 1st, 3rd, and 4th gears): about 0 V
27	RED/YEL	ATFT (ATF TEMPERATURE SENSOR)	Detects ATF temperature signal	With ignition switch ON (II): about 0.2—4.0 V (about 1.8 V at operating temperature) (depending on ATF temperature)
28	BLU/YEL	ATPFWD (TRANSMISSION RANGE SWITCH D/2/1 POSITION)	Detects transmission range switch D, 2, and 1 positions signal	In D, 2, and 1 positions: about 0 V In any other position: battery voltage
29	WHT/BLK	EGRP (EXHAUST GAS RECIRCULATION (EGR) VALVE POSITION SENSOR)	Detects EGR valve position sensor signal	With engine running: 1.2—3.0 V (depending on EGR valve lift)

(cont'd)

System Description (cont'd)

PCM Inputs and Outputs at Connector B (△) (44P)

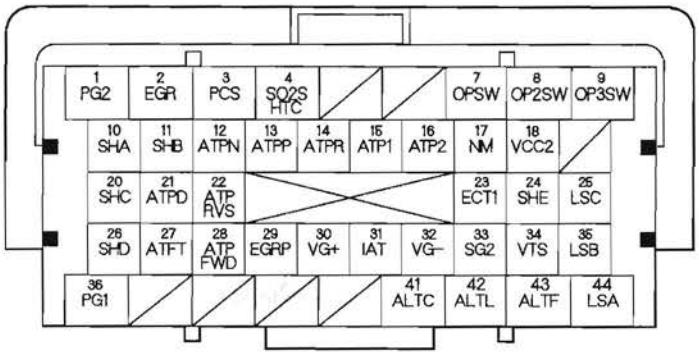

Terminal side of female terminals

NOTE: Standard battery voltage is about 12 V.

Terminal number	Wire color	Terminal name	Description	Signal
30	RED/BLK	VG+ (MASS AIR FLOW (MAF) SENSOR +SIDE)	Detects MAF sensor signal	At idle: about 1.3 V
31	RED/YEL	IAT (INTAKE AIR TEMPERATURE (IAT) SENSOR)	Detects IAT sensor signal	With ignition switch ON (II): about 0.1—4.0 V (about 1.8 V at normal operating temperature)
32	BLK/RED	VG− (MASS AIR FLOW (MAF) SENSOR −SIDE)	Ground for MAF sensor signal	Less than 0.5 V at all times
33	GRN/BLK	SG2 (SENSOR GROUND)	Sensor ground	Less than 0.5 V at all times
34	GRN/YEL	VTS (ROCKER ARM OIL CONTROL SOLENOID)	Drives rocker arm oil control solenoid	At idle: about 0 V
35	BRN	LSB (A/T CLUTCH PRESSURE CONTROL SOLENOID VALVE AB)	Drives A/T clutch pressure control solenoid valve B	With ignition switch ON (II): pulses
36	BLK	PG1 (POWER GROUND)	Ground circuit for PCM circuit	Less than 0.5 V at all times
41	WHT/GRN	ALTC (ALTERNATOR CONTROL)	Sends alternator control signal	With fully warmed up engine running: 5.0 V (depending on electrical load)
42	WHT/BLU	ALTL (ALTERNATOR L SIGNAL)	Detects alternator L signal	With ignition switch ON (II): about 0 V With engine running: battery voltage
43	WHT/RED	ALTF (ALTERNATOR FR SIGNAL)	Detects alternator FR signal	With engine running: about 2.6—3.4 V (depending on electrical load)
44	RED/BLK	LSA (A/T CLUTCH PRESSURE CONTROL SOLENOID VALVE A)	Drives A/T clutch pressure control solenoid valve A	With ignition switch ON (II): pulses

PCM Inputs and Outputs at Connector C (○) (44P)

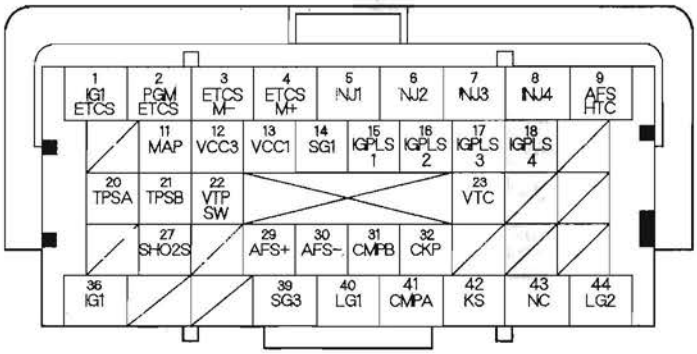

Terminal side of female terminals

NOTE: Standard battery voltage is about 12 V.

Terminal number	Wire color	Terminal name	Description	Signal
1	WHT	IG1ETCS (IGNITION SIGNAL ETCS)	Detects ignition signal	With ignition switch ON (II): battery voltage
2	BLK	PGMETCS (POWER GROUND ETCS)	Ground circuit for PCM circuit	Less than 0.5 V at all times
3	GRN/YEL	ETCSM− (THROTTLE ACTUATOR −SIDE)	Ground for throttle actuator	With ignition switch ON (II): about 0 V
4	BLU/RED	ETCSM+ (THROTTLE ACTUATOR +SIDE)	Drives throttle actuator	With ignition switch ON (II): about 1.5 V
5	BRN	INJ1 (No. 1 INJECTOR)	Drives No. 1 injector	At idle: duty controlled With ignition switch ON (II): battery voltage
6	RED	INJ2 (No. 2 INJECTOR)	Drives No. 2 injector	
7	BLU	INJ3 (No. 3 INJECTOR)	Drives No. 3 injector	
8	YEL	INJ4 (No. 4 INJECTOR)	Drives No. 4 injector	
9	WHT/GRN	AFSHTC (AIR FUEL RATIO (A/F) SENSOR HEATER CONTROL (SENSOR 1))	Drives A/F sensor heater (sensor 1)	With ignition switch ON (II): about 0 V With fully warmed up engine running: pulses
11	GRN/RED	MAP (MANIFOLD ABSOLUTE PRESSURE (MAP) SENSOR)	Detects MAP sensor signal	With ignition switch ON (II): about 3.0 V At idle: about 1.0 V (depending on engine speed)
12	BLU	VCC3 (SENSOR VOLTAGE)	Provides sensor reference voltage	With ignition switch ON (II): about 5.0 V
13	YEL/RED	VCC1 (SENSOR VOLTAGE)	Provides sensor reference voltage	With ignition switch ON (II): about 5.0 V
14	GRN/WHT	SG1 (SENSOR GROUND)	Sensor ground	Less than 0.5 V at all times
15	YEL/GRN	IGPLS1 (No. 1 IGNITION COIL PULSE)	Drives No. 1 ignition coil	With ignition switch ON (II): about 0 V With engine running: pulses
16	BLU/RED	IGPLS2 (No. 2 IGNITION COIL PULSE)	Drives No. 2 ignition coil	
17	WHT/BLU	IGPLS3 (No. 3 IGNITION COIL PULSE)	Drives No. 3 ignition coil	
18	BRN	IGPLS4 (No. 4 IGNITION COIL PULSE)	Drives No. 4 ignition coil	
20	RED/BLK	TPSA (THROTTLE POSITION (TP) SENSOR A)	Detects TP sensor A signal	With throttle fully open: about 3.9 V With throttle fully closed: about 1.0 V
21	RED/BLU	TPSB (THROTTLE POSITION (TP) SENSOR B)	Detects TP sensor B signal	With throttle fully open: about 4.1 V With throttle fully closed: about 1.7 V

(cont'd)

System Description (cont'd)

PCM Inputs and Outputs at Connector C (○) (44P)

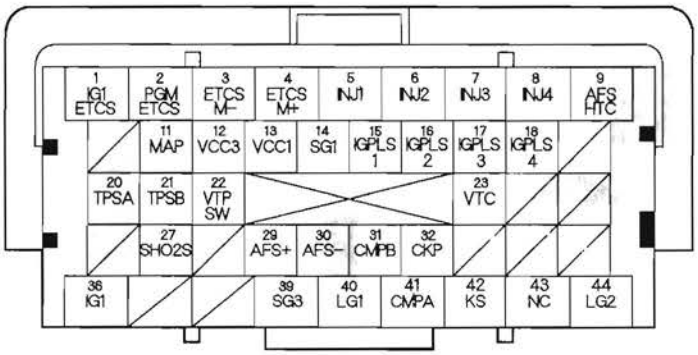

Terminal side of female terminals

NOTE: Standard battery voltage is about 12 V.

Terminal number	Wire color	Terminal name	Description	Signal
22	BLU/BLK	VTPSW (ROCKER ARM OIL PRESSURE SWITCH)	Detects rocker arm oil pressure switch signal	At idle: about 0 V
23	BLU/WHT	VTC (VTC OIL CONTROL SOLENOID VALVE)	Drives VTC oil control solenoid valve	With ignition switch ON (II): about 0 V
27	WHT/RED	SHO2S (SECONDARY HEATED OXYGEN SENSOR (SECONDARY HO2S) (SENSOR 2)	Detects secondary HO2S (sensor 2) signal	With throttle fully opened at idle and fully warmed up engine: about 0.8 V With throttle quickly closed: below 0.1 V
29	RED	AFS+ (AIR FUEL RATIO (A/F) SENSOR (SENSOR 1) +SIDE)	Detects A/F sensor (sensor 1) signal	At idle: about 2.2 V
30	RED/YEL	AFS− (AIR FUEL RATIO (A/F) SENSOR (SENSOR 1) −SIDE)	Detects A/F sensor (sensor 1) signal	At idle: about 1.8 V
31	GRN	CMPB (CAMSHAFT POSITION (CMP) SENSOR B)	Detects CMP sensor B signal	With engine running: pulses
32	BLU/YEL	CKP (CRANKSHAFT POSITION (CKP) SENSOR)	Detects CKP sensor signal	With engine running: pulses
36	BLK/RED	IG1 (IGNITION SIGNAL)	Detects ignition signal	With ignition switch ON (II): battery voltage
39	GRN	SG3 (SENSOR GROUND)	Sensor ground	Less than 0.5 V at all times
40	BRN/YEL	LG1 (LOGIC GROUND)	Ground circuit for PCM circuit	Less than 0.5 V at all times
41	BLU/WHT	CMPA (CAMSHAFT POSITION (CMP) SENSOR A)	Detects CMP sensor A signal	With engine running: pulses
42	RED/BLU	KS (KNOCK SENSOR)	Detects knock sensor signal	With engine knocking: pulses
43	BLK/WHT	NC (OUTPUT SHAFT (COUNTERSHAFT) SPEED SENSOR)	Detects output shaft (countershaft) speed sensor signals	With ignition switch ON (II): 0 V or about 5.0 V With driving: pulses
44	BRN/YEL	LG2 (LOGIC GROUND)	Ground circuit for PCM circuit	Less than 0.5 V at all times

PGM-FI System

The programmed fuel injection (PGM-FI) system is a sequential multiport fuel injection system.

Air Conditioning (A/C) Compressor Clutch Relay
When the PCM receives a demand for cooling from the A/C system, it delays the compressor from being energized, and enriches the mixture to assure smooth transition to the A/C mode.

Air Fuel Ratio (A/F) Sensor
The A/F sensor operates over a wide air/fuel range. The A/F sensor is installed upstream of the TWC, and sends signals to the PCM which varies the duration of fuel injection accordingly.

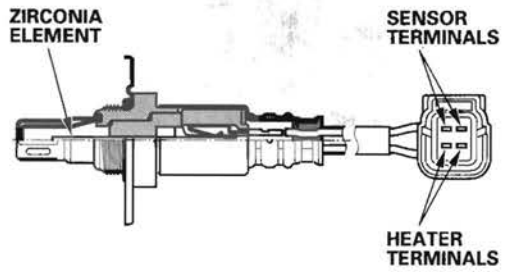

Barometric Pressure (BARO) Sensor
The BARO sensor is inside the PCM. It converts atmospheric pressure into a voltage signal that modifies the basic duration of the fuel injection discharge.

Camshaft Position (CMP) Sensor B
CMP sensor B detects the position of the No. 1 cylinder as a reference for sequential fuel injection to each cylinder.

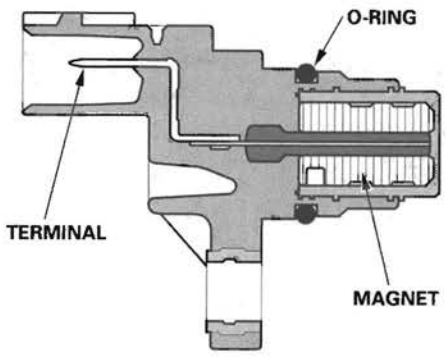

Crankshaft Position (CKP) Sensor
The CKP sensor detects crankshaft speed and is used by the PCM to determine ignition timing and timing for fuel injection of each cylinder as well as detecting engine misfire.

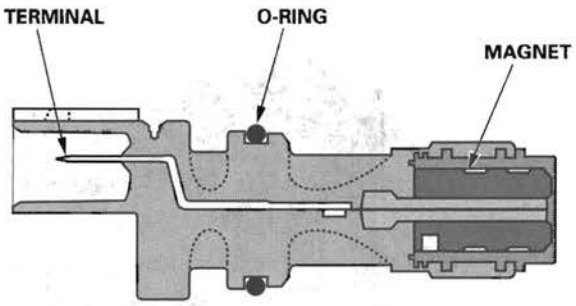

Engine Coolant Temperature (ECT) Sensors 1 and 2
ECT sensors 1 and 2 are temperature dependent resistors (thermistors). The resistance decreases as the engine coolant temperature increases.

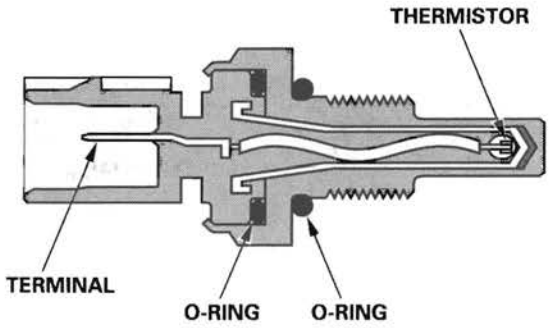

*: This illustration shows ECT sensor 1.

Ignition Timing Control
The PCM contains the memory for basic ignition timing at various engine speeds and manifold absolute pressures. It also adjusts the timing according to engine coolant temperature and intake air temperature.

Injector Timing and Duration
The PCM contains the memory for basic discharge duration at various engine speeds and manifold pressures. The basic discharge duration, after being read out from the memory, is further modified by signals sent from various sensors to obtain the final discharge duration.
By monitoring long term fuel trim, the PCM detects long term malfunctions in the fuel system and sets a diagnostic trouble code (DTC).

(cont'd)

System Description (cont'd)

Knock Sensor
The knock control system adjusts the ignition timing to minimize knock.

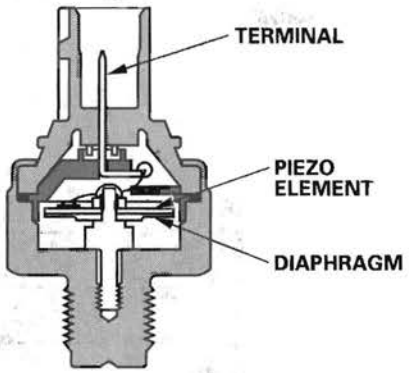

Manifold Absolute Pressure (MAP) Sensor
The MAP sensor converts manifold absolute pressures into electrical signals to the PCM.

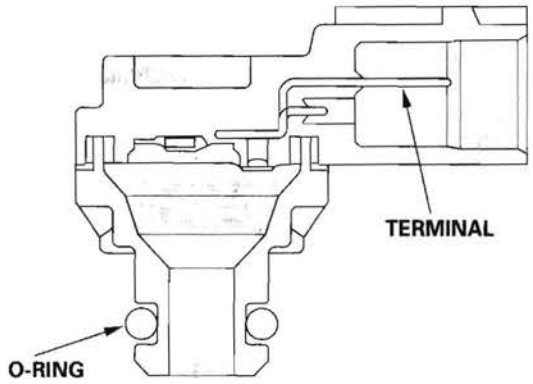

Malfunction Indicator Lamp (MIL) Indication (In relation to Readiness Codes)
The vehicle has certain "readiness codes" that are part of the on-board diagnostics for the emissions systems. If the vehicle's battery has been disconnected or gone dead, if the DTCs have been cleared, or if the PCM has been reset, these codes are reset. In some states, part of the emissions testing is to make sure these codes are set to complete. If all of them are not set to complete, the vehicle may fail the test, or the test cannot be finished.

To check if the readiness codes are set to complete, turn the ignition switch ON (II), but do not start the engine. The MIL will come on for 15—20 seconds. If it then goes off, the readiness codes are complete. If it flashes five times, one or more readiness codes are not complete. To set each code, drive the vehicle or run the engine as described in the procedures (see page 11-57).

Mass Air Flow (MAF) Sensor/Intake Air Temperature (IAT) Sensor
The mass air flow (MAF) sensor/intake air temperature (IAT) sensor contains a hot wire and a thermistor. It is located in the intake air passage. The resistance of the hot wire and thermistor changes due to intake air temperature and air flow. The control circuit in the MAF sensor controls the current to keep the hot wire at a set temperature. The current is converted to voltage in the control circuit, then output to the PCM.

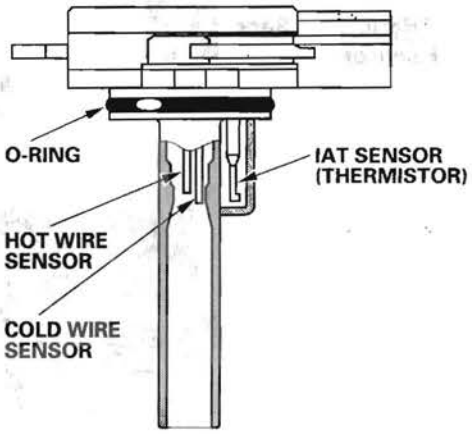

Output Shaft (Countershaft) Speed Sensor
This sensor detects countershaft speed.

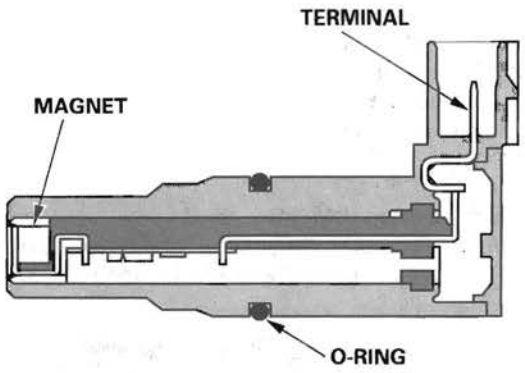

Secondary Heated Oxygen Sensor (Secondary HO2S)
The secondary HO2S detects the oxygen content in the exhaust gas downstream of the three way catalytic converter (TWC), and sends signals to the PCM which varies the duration of fuel injection accordingly. To stabilize its output, the sensor has an internal heater. The PCM compares the HO2S output with the A/F sensor output to determine catalyst efficiency. The secondary HO2S is located on the TWC.

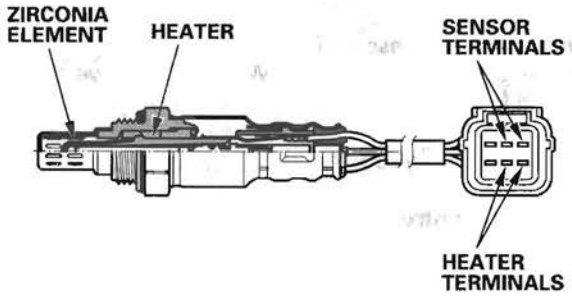

Electronic Throttle Control System

The throttle is electronically controlled by the electronic throttle control system. Refer to the system diagram to see a functional layout of the system.

Idle control: When the engine is idling, the PCM controls the throttle actuator to maintain the proper idle speed according to engine loads.

Acceleration control: When the accelerator pedal is pressed, the PCM opens the throttle valve depending on the accelerator pedal position (APP) sensor signal.

Cruise control: The PCM controls the throttle actuator to maintain set speed when the cruise control is operating. The throttle actuator takes the place of the cruise control actuator.

Accelerator Pedal Position (APP) Sensor
As the accelerator pedal position changes, the sensor varies the signal voltage to the PCM.

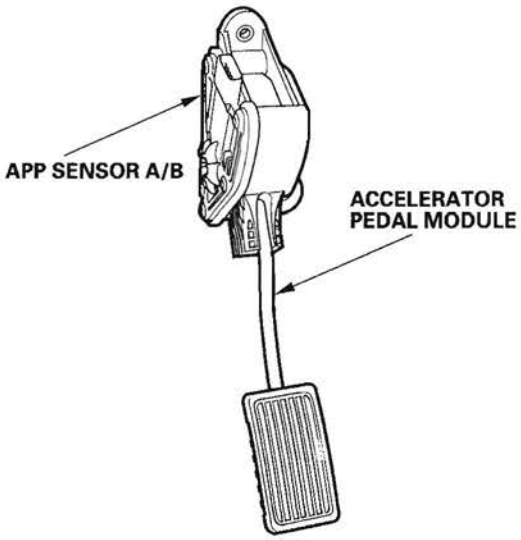

(cont'd)

System Description (cont'd)

Throttle Body
The throttle body is a single-barrel side draft type. The lower portion of the throttle valve is heated by engine coolant from the cylinder head to prevent icing of the throttle plate.

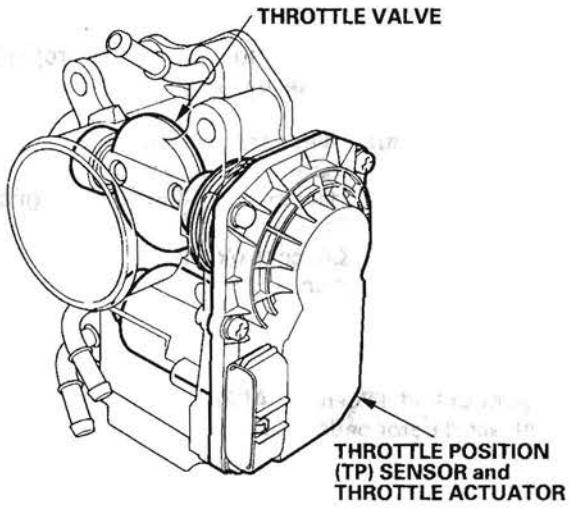

Idle Control System

When the engine is cold, the A/C compressor is on, the transmission is in gear, the brake pedal is pressed, the power steering load is high, or the alternator is charging, the PCM controls current to the throttle actuator to maintain the correct idle speed.

Brake Pedal Position Switch
The brake pedal position switch signals the PCM when the brake pedal is pressed.

Power Steering Pressure (PSP) Switch
The PSP switch signals the PCM when the power steering load is high.

Fuel Supply System

Fuel Cutoff Control
During deceleration with the throttle valve closed, current to the injectors is cut off to improve fuel economy at engine speeds over 850 rpm. Fuel cutoff also occurs when the engine speed exceeds 6,700 rpm, regardless of the position of the throttle valve, to protect the engine from over-revving. When the vehicle is stopped, the PCM cuts the fuel at engine speeds over 5,000 rpm. The engine speed of fuel cut is lower on a cold engine.

Fuel Pump Control
When the ignition is turned on, the PCM grounds PGM-FI main relay 2 (FUEL PUMP) which feeds current to the fuel pump for 2 seconds to pressurize the fuel system. With the engine running, the PCM grounds PGM-FI main relay 2 (FUEL PUMP) and feeds current to the fuel pump. When the engine is not running and the ignition is on, the PCM cuts ground to PGM-FI main relay 2 (FUEL PUMP) which cuts current to the fuel pump.

PGM-FI Main Relay 1 and 2
PGM-FI main relay 1 is energized whenever the ignition switch is ON (II) to supply battery voltage to the PCM, power to the injectors, and power for PGM-FI main relay 2 (FUEL PUMP). PGM-FI main relay 2 (FUEL PUMP) is energized to supply power to the fuel pump for 2 seconds when the ignition switch is turned ON (II), and when the engine is cranking or running.

VTEC/VTC

- The i-VTEC has a variable valve timing control (VTC) mechanism on the intake camshaft in addition to the usual VTEC.
  This mechanism improves fuel efficiency and reduces exhaust emissions at all levels of engine speed, vehicle speed, and engine load.
- The VTEC mechanism changes the valve lift and timing by using more than one cam profile.
- The VTC changes the phase of the intake camshaft via oil pressure. It changes the intake valve timing continuously.

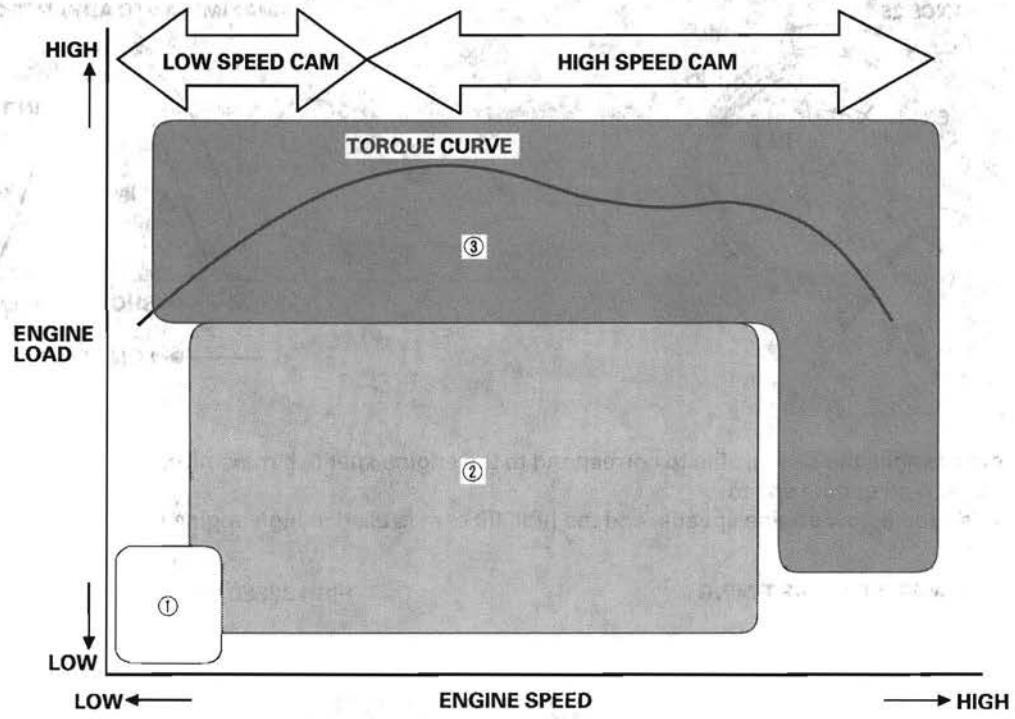

Driving Condition	VTC Control	Description
① Light-load	Base Position	For stable combustion the cam angle is retarded, and reduces the entry of exhaust gas into the cylinder.
② Medium/high-load	Advance Control	Cam phase angle is controlled to optimize valve timing, improving fuel efficiency and reducing emissions.
③ High speed	Advance-Base Position	To reduce the pumping loss, the intake valve is closed quickly. This helps the entry of fuel air mixture by the charging effect, and maximizes engine power.

(cont'd)

System Description (cont'd)

VTC System

- The VTC system makes continuous intake valve timing changes based on operating conditions.
- Intake valve timing is optimized to allow the engine to produce maximum power.
- Cam angle is advanced to obtain the EGR effect and reduce pumping loss. The intake valve is closed quickly to reduce the entry of the air/fuel mixture into the intake port and improve the charging effect.
- The system reduces the cam advance at idle, stabilizes combustion, and reduces engine speed.
- If a malfunction occurs, the VTC system control is disabled and the valve timing is fixed at the fully retarded position.

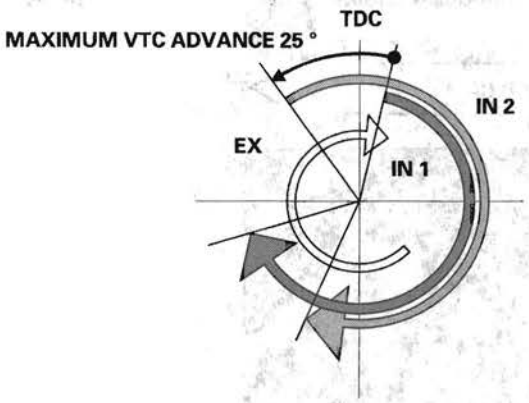

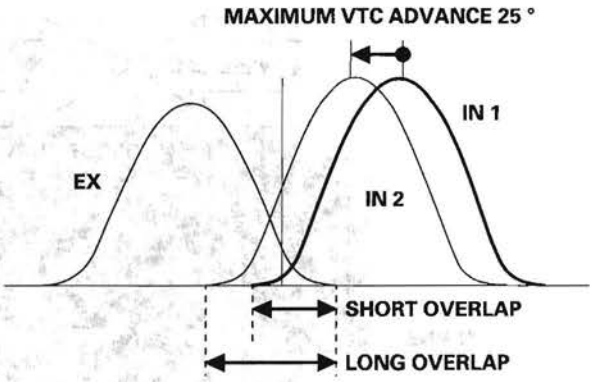

VTEC System

- The VTEC system changes the cam profile to correspond to the engine speed. It maximizes torque at low engine speed and output at high engine speed.
- The low lift cam is used at low engine speeds, and the high lift cam is used at high engine speeds.

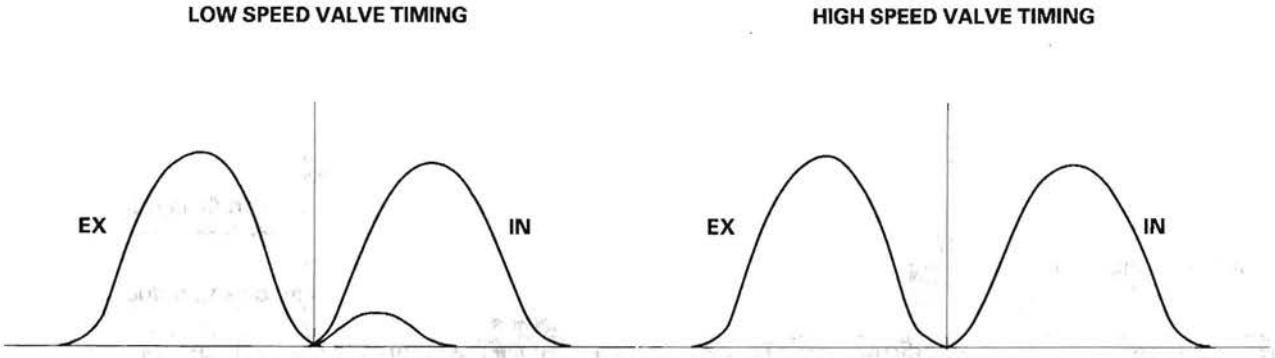

VTEC/VTC

System Diagram

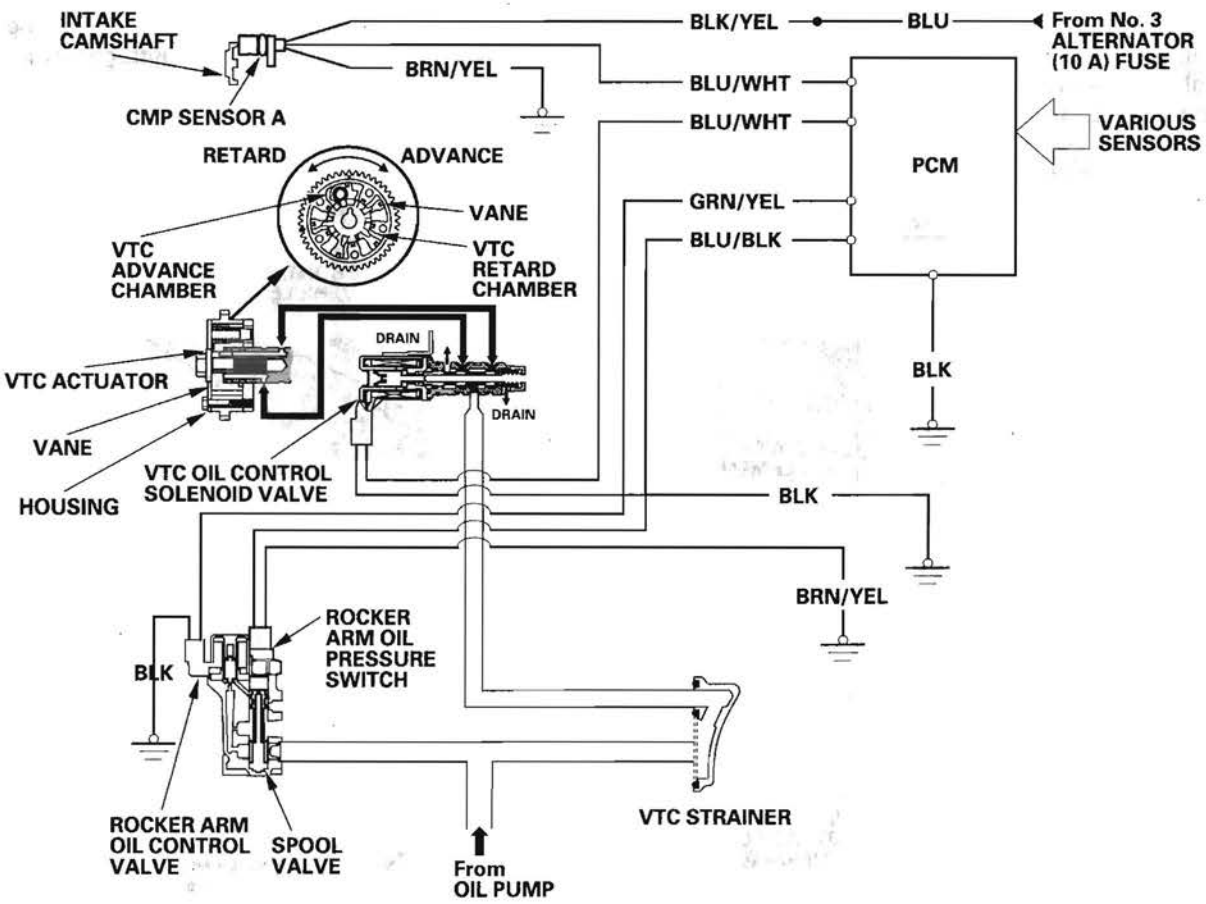

Camshaft Position (CMP) Sensor A

CMP sensor A detects camshaft angle position for the VTC system.

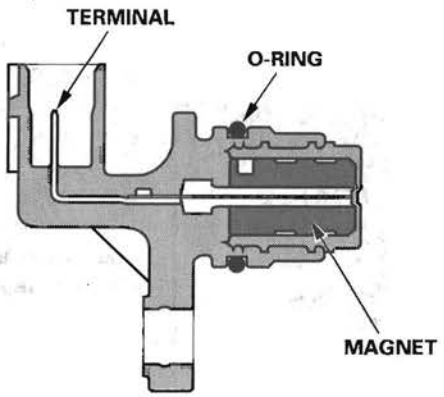

(cont'd)

System Description (cont'd)

Intake Air System

This system supplies air for engine needs.

Intake Air Bypass Control Thermal Valve
When the engine is cold, the intake air bypass control thermal valve sends air to the injector.
The amount of air is regulated by engine coolant temperature. Once the engine is hot, the intake air bypass control thermal valve closes, stopping air to the injector.

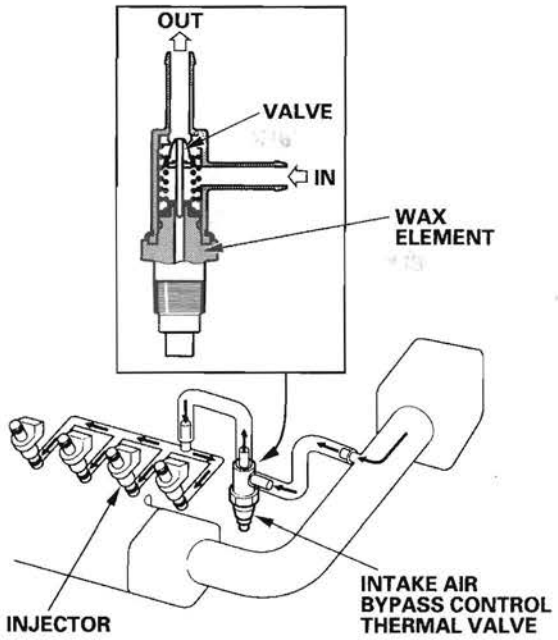

Catalytic Converter System

Three Way Catalytic Converter (TWC)
The TWC converts hydrocarbons (HC), carbon monoxide (CO), and oxides of nitrogen (NOx) in the exhaust gas to carbon dioxide (CO_2), nitrogen (N_2), and water vapor.

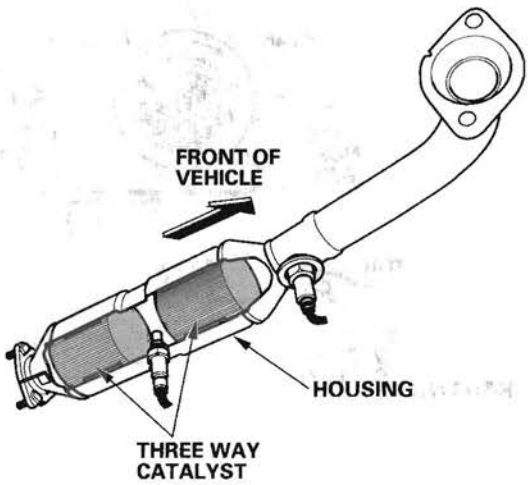

Positive Crankcase Ventilation (PCV) System

The PCV valve prevents blow-by gasses from escaping into the atmosphere by venting them into the intake manifold.

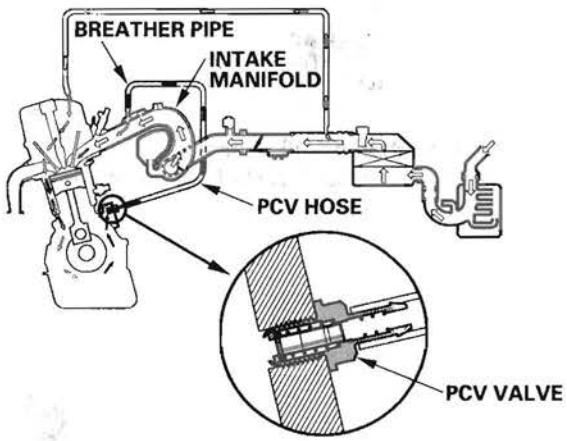

: BLOW-BY VAPOR
: FRESH AIR

Exhaust Gas Recirculation (EGR) System

Refer to the system diagram to see a functional layout of the system.

EGR Valve
The EGR valve lowers peak combustion temperatures and reduces oxides of nitrogen emissions (NOx) by recirculating exhaust gas through the intake manifold and into the combustion chambers.

Evaporative Emission (EVAP) Control System

Refer to the system diagram to see a functional layout of the system.

EVAP Canister
The EVAP canister temporarily stores fuel vapor from the fuel tank until it can be purged back into the engine and burned.

EVAP Canister Purge Valve
When the engine coolant temperature is below 140 °F (60 °C), the PCM turns off the EVAP canister purge valve which cuts vacuum to the EVAP canister.

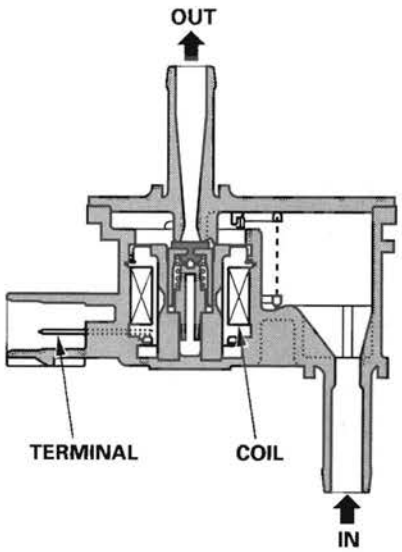

Fuel Tank Pressure (FTP) Sensor
The FTP sensor converts fuel tank absolute pressure into an electrical input to the PCM during the EVAP leak check.

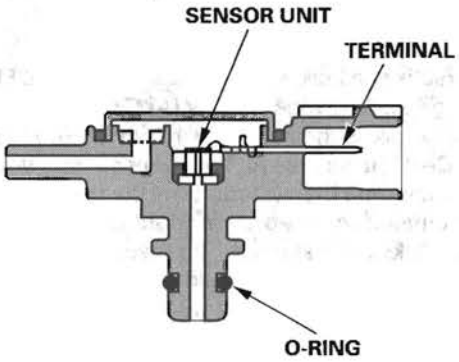

EVAP Canister Vent Shut Valve
The EVAP canister vent shut valve is on the EVAP canister.
The EVAP canister vent shut valve controls the venting of the EVAP canister.

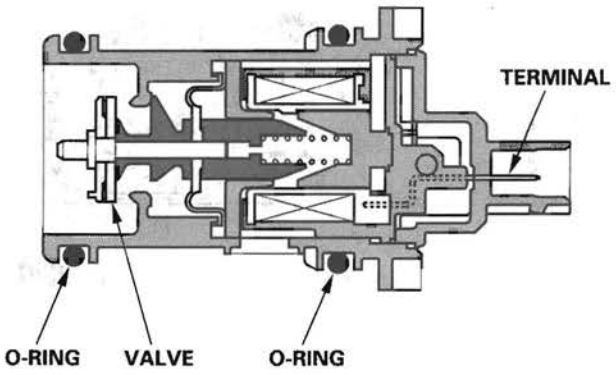

(cont'd)

System Description (cont'd)

Fuel Cap Warning Message

The PCM will detect a loose or missing fuel fill cap as an evaporative system leak and alerts the driver by showing a warning message in the gauge display.

First drive cycle
The first time a leak is detected a "CHECK FUEL CAP" message in the gauge display (A). To scroll to another message, press the select/reset button. The"CHECK FUEL CAP" message will appear each time you restart the engine until the system turns the message off. Turn the engine off then replace or tighten the fuel fill cap until it clicks at least once. The message should go off after several days of normal driving after the fuel fill cap has been tightened or replaced.

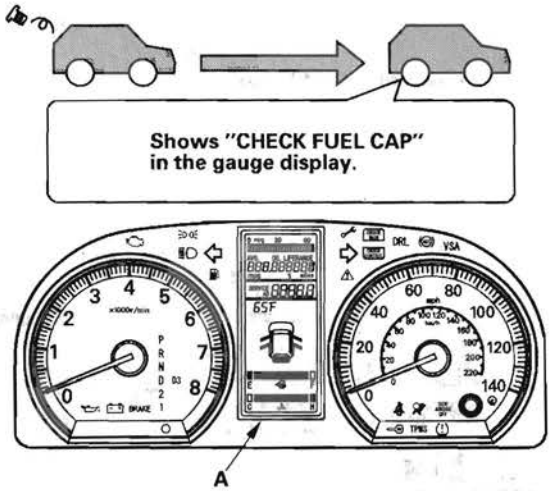

To make the message go off (With the HDS)

Procedure

1. Tighten the fuel fill cap until it clicks.
2. Clear the Temporary DTC with the HDS.
3. Verify there is no leak by doing the EVAP FUNCTION TEST in the INSPECTION MENU with the HDS.

To make the message go off (Without the HDS)

Procedure

1. Tighten the fuel fill cap until it clicks.
2. The message should go off after several days of normal driving.

Electronic Throttle Control System Diagram

The electronic throttle control system consists of the throttle actuator, throttle position (TP) sensor A/B, accelerator pedal position (APP) sensor A/B, electronic throttle control system (ETCS) control relay, and the PCM.

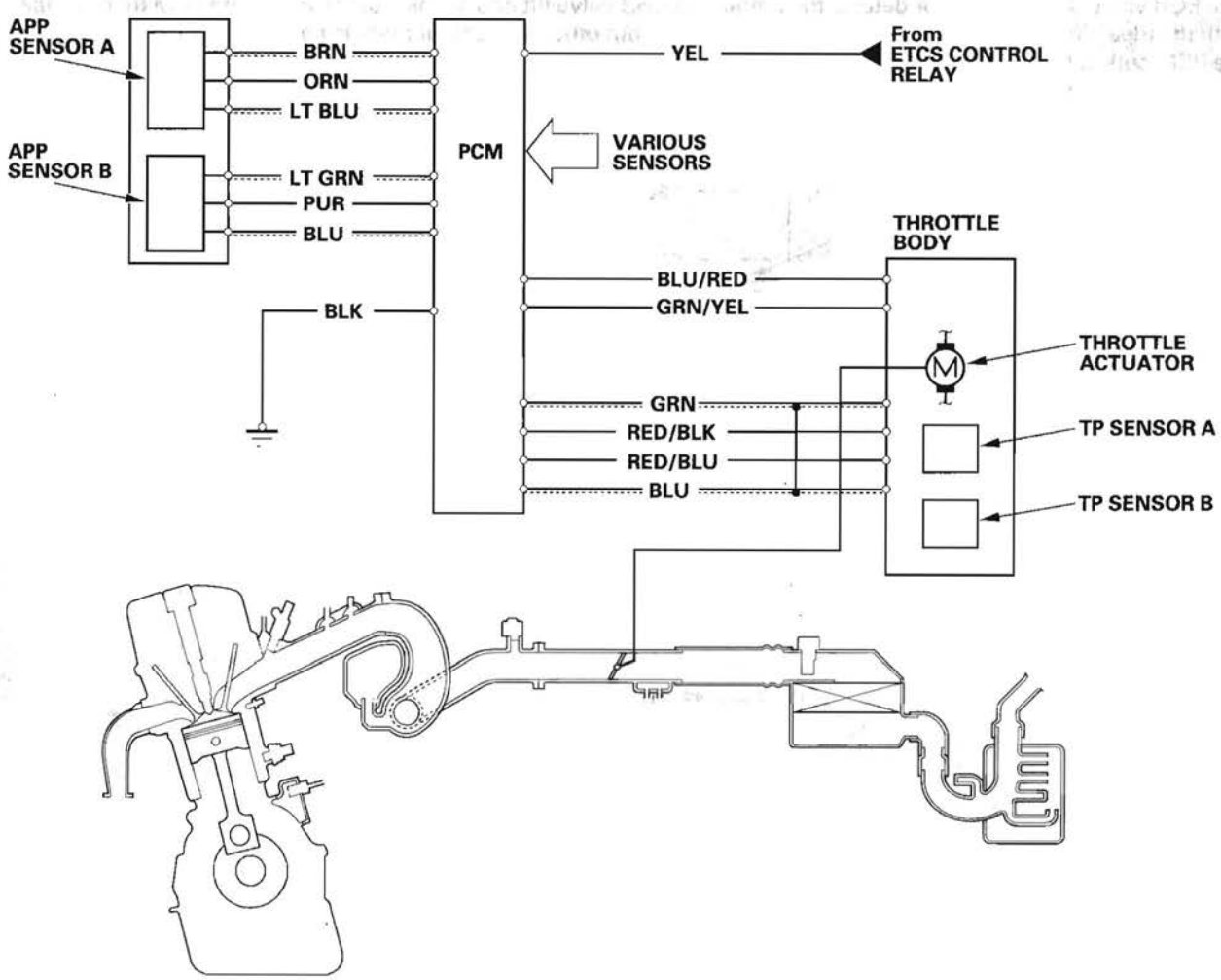

(cont'd)

System Description (cont'd)

Exhaust Gas Recirculation (EGR) System Diagram

The EGR system reduces oxides of nitrogen (NOx) emissions by recirculating exhaust gas through the EGR valve and the intake manifold into the combustion chambers. The PCM memory includes the ideal EGR valve position for varying operating conditions.

The EGR valve position sensor detects the amount of EGR valve lift and sends it to the PCM. The PCM then compares it with the ideal lift in its memory (based on signals sent from other sensors). If there is any difference between the two, the PCM cuts current to the EGR valve.

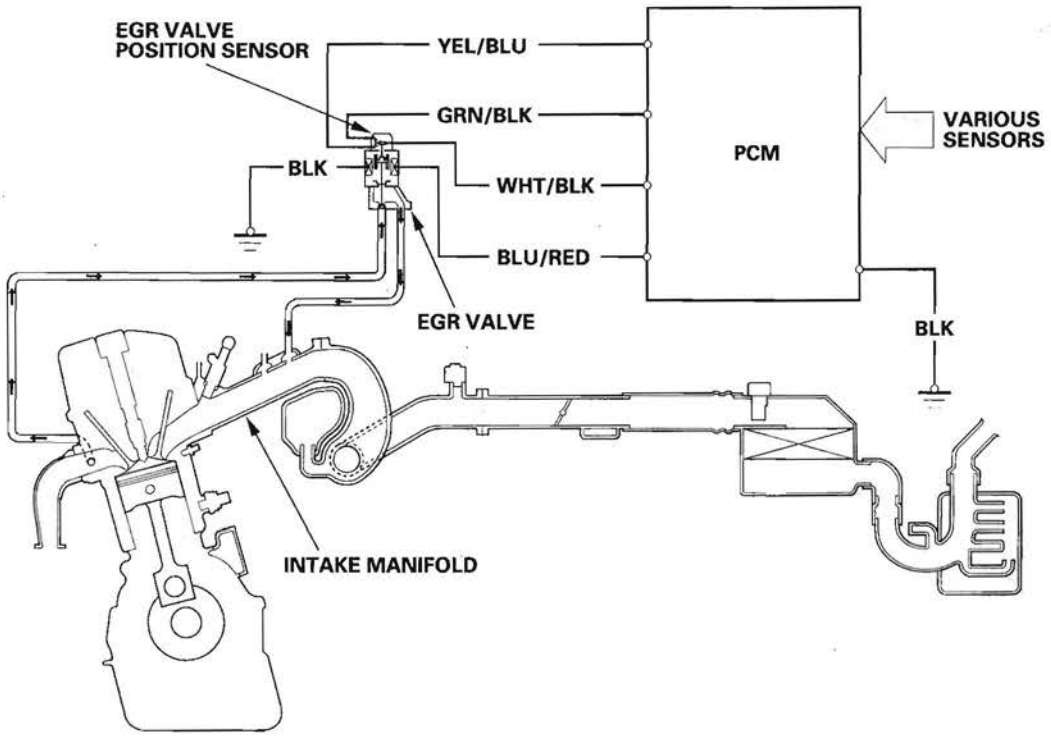

Evaporative Emission (EVAP) Control Diagram

The EVAP controls minimize the amount of fuel vapor escaping to the atmosphere. Vapor from the fuel tank is temporarily stored in the EVAP canister until it can be purged from the canister into the engine and burned.

The EVAP canister is purged by drawing fresh air through it and into a port on the intake manifold. The purging vacuum is controlled by the EVAP canister purge valve, which operates whenever engine coolant temperature is above 140 °F (60 °C).

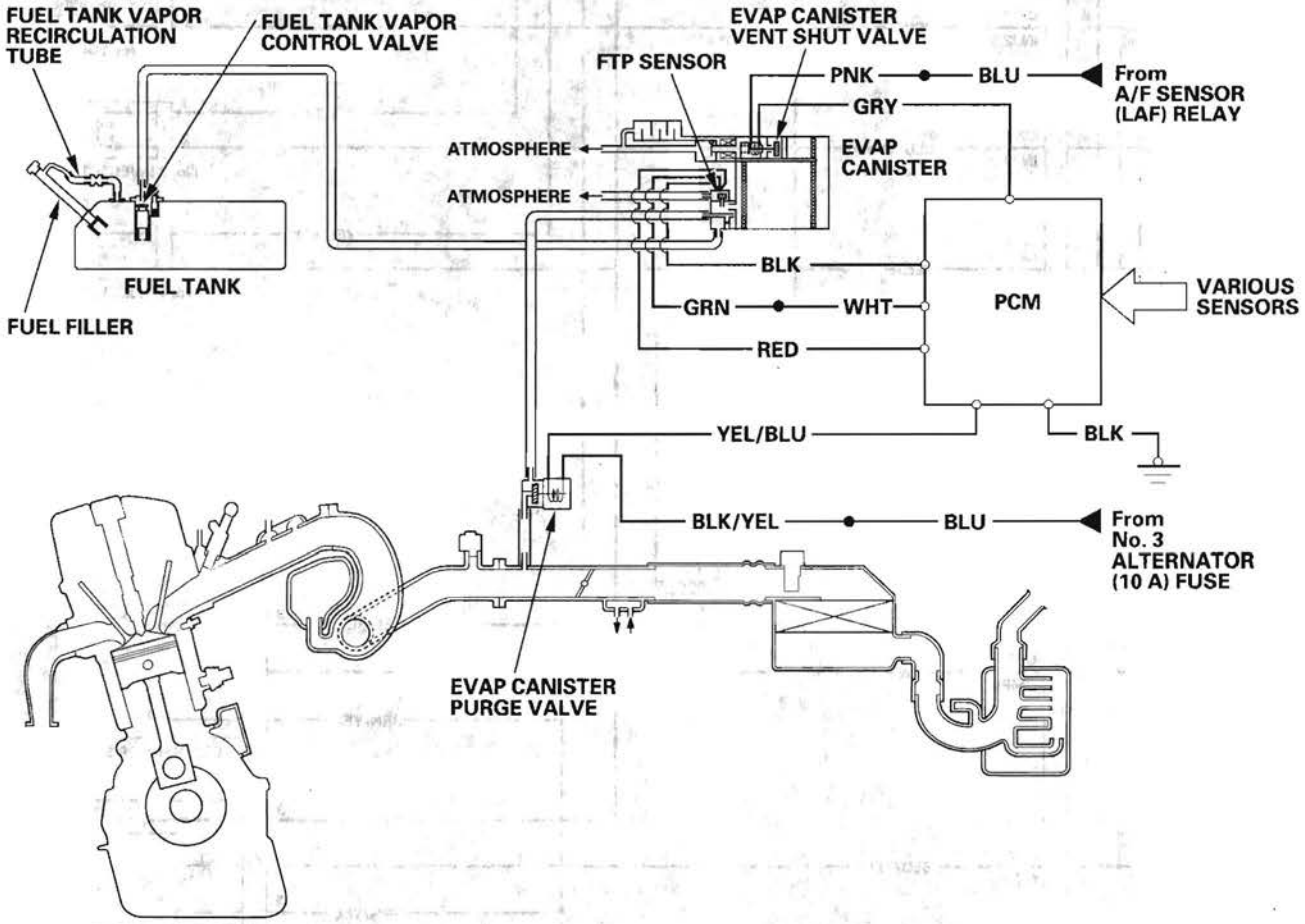

(cont'd)

System Description (cont'd)

PCM Circuit Diagram

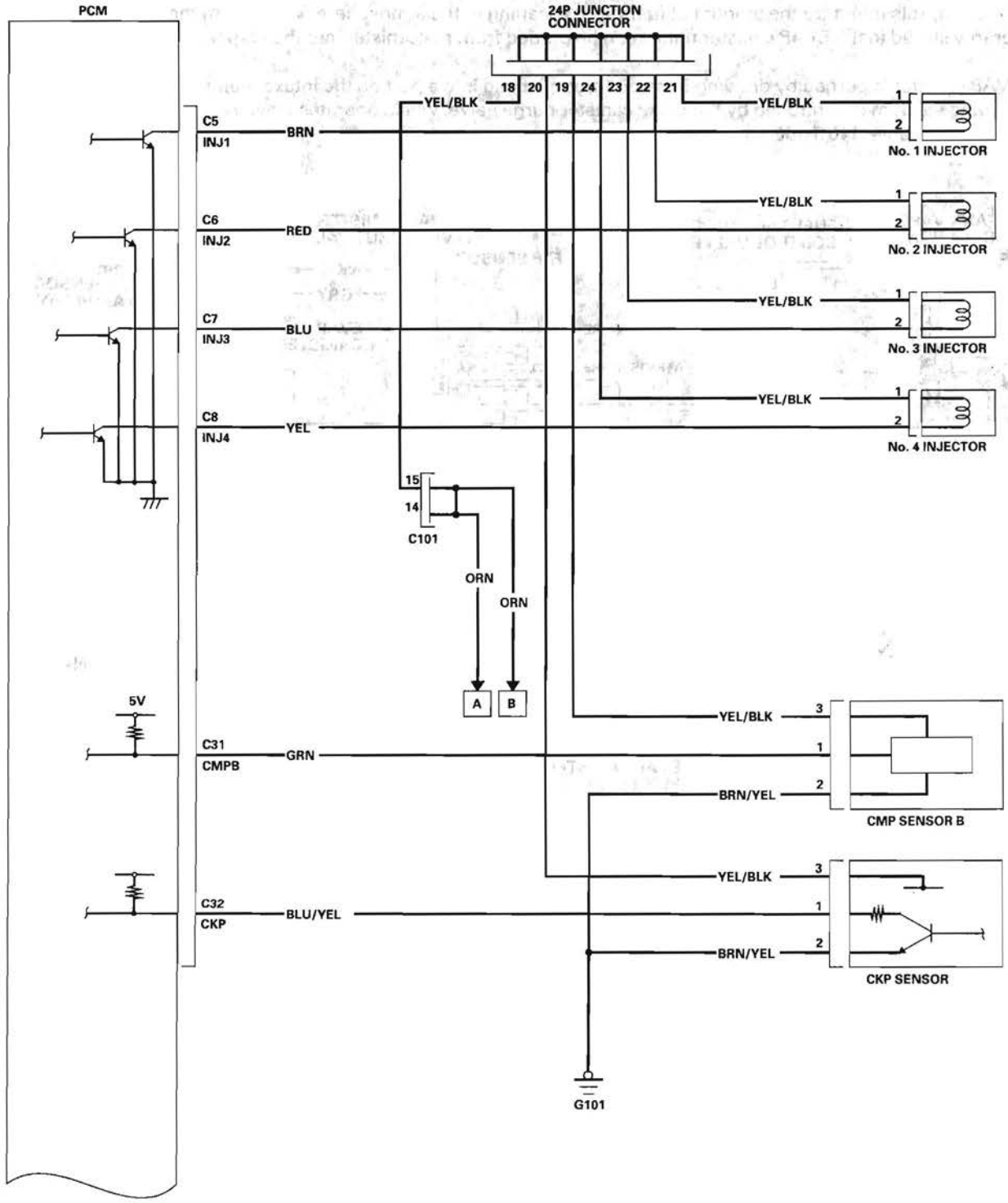

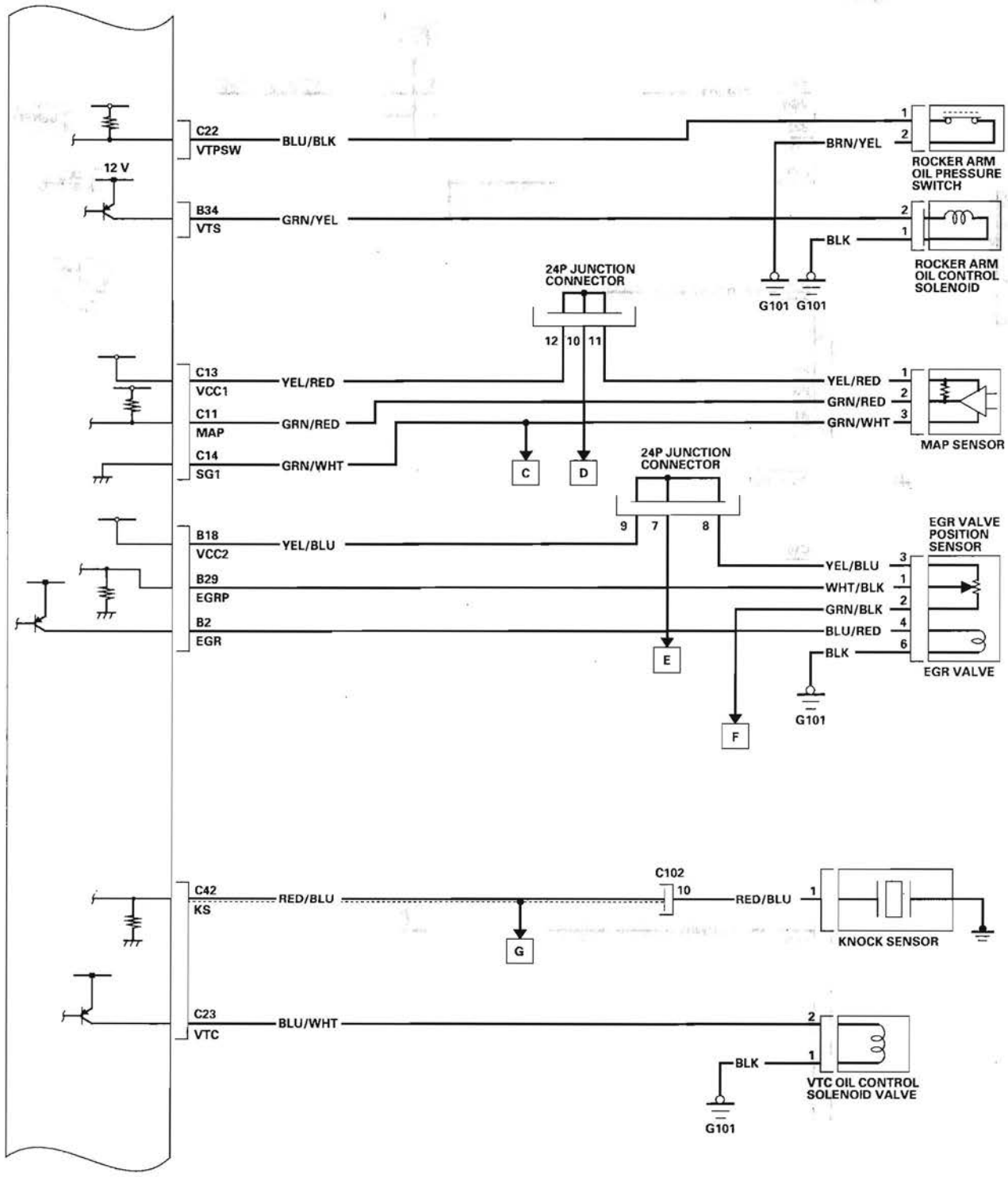
C22
VTPSW
BLU/BLK
12 V
B34
VTS
GRN/YEL
1
2
BRN/YEL
ROCKER ARM OIL PRESSURE SWITCH
2
1
BLK
ROCKER ARM OIL CONTROL SOLENOID
G101
G101
24P JUNCTION CONNECTOR
12
10
11
C13
VCC1
YEL/RED
C11
MAP
GRN/RED
C14
SG1
GRN/WHT
YEL/RED
GRN/RED
GRN/WHT
1
2
3
MAP SENSOR
C
D
24P JUNCTION CONNECTOR
9
7
8
B18
VCC2
YEL/BLU
B29
EGRP
B2
EGR
YEL/BLU
WHT/BLK
GRN/BLK
BLU/RED
BLK
3
1
2
4
6
EGR VALVE POSITION SENSOR
EGR VALVE
E
F
G101
C42
KS
RED/BLU
C102
10
RED/BLU
1
KNOCK SENSOR
G
C23
VTC
BLU/WHT
2
1
BLK
VTC OIL CONTROL SOLENOID VALVE
G101

(cont'd)

System Description (cont'd)

PCM Circuit Diagram (cont'd)

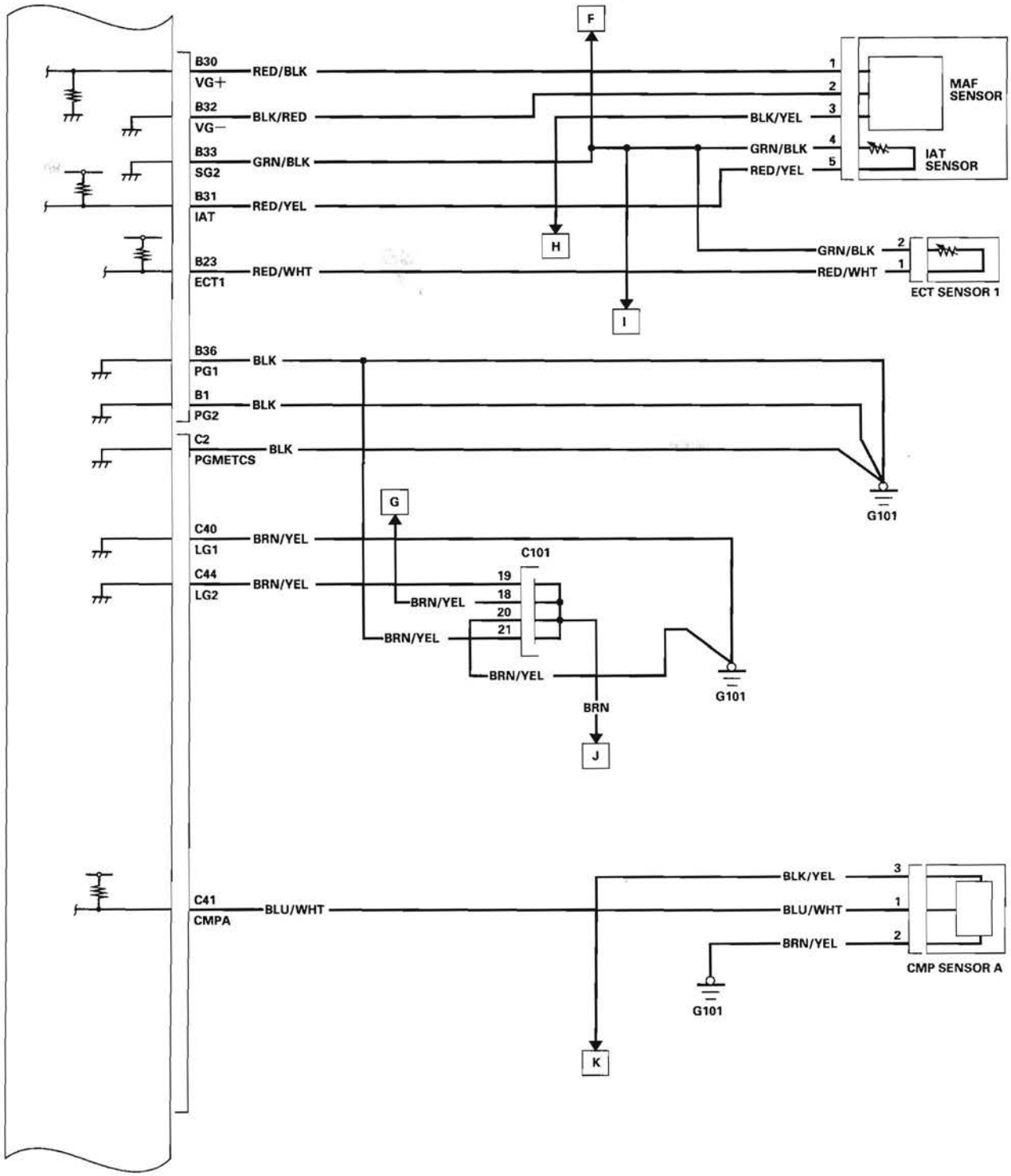

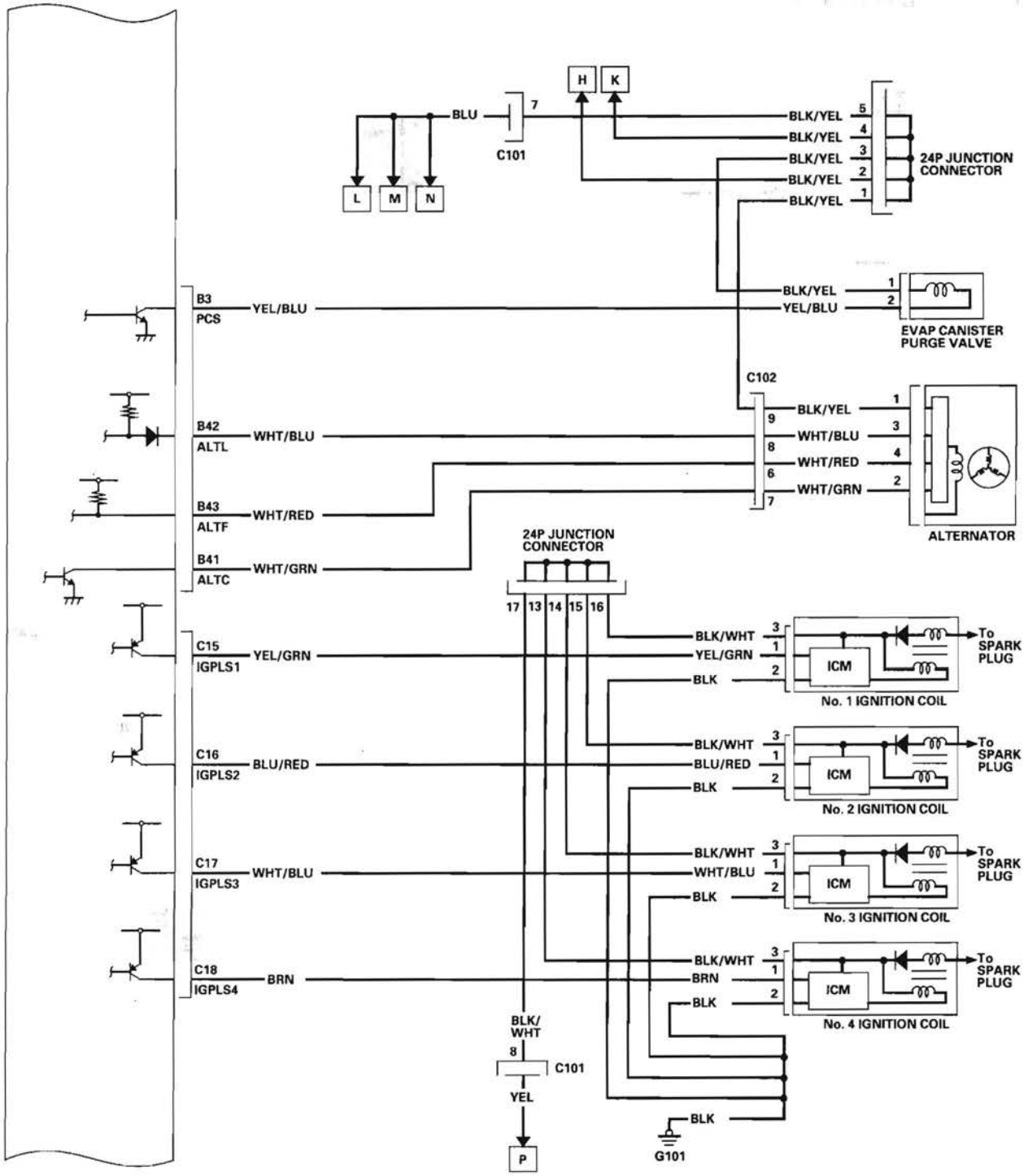
H
K
BLU
7
C101
L
M
N
BLK/YEL
BLK/YEL
BLK/YEL
BLK/YEL
BLK/YEL
5
4
3
2
1
24P JUNCTION CONNECTOR
BLK/YEL
YEL/BLU
1
2
EVAP CANISTER PURGE VALVE
B3
PCS
YEL/BLU
C102
B42
ALTL
WHT/BLU
B43
ALTF
WHT/RED
B41
ALTC
WHT/GRN
9
8
6
7
BLK/YEL
WHT/BLU
WHT/RED
WHT/GRN
1
3
4
2
ALTERNATOR
24P JUNCTION CONNECTOR
17
13
14
15
16
C15
IGPLS1
YEL/GRN
C16
IGPLS2
BLU/RED
C17
IGPLS3
WHT/BLU
C18
IGPLS4
BRN
BLK/WHT
YEL/GRN
BLK
BLU/RED
WHT/BLU
BRN
3
1
2
ICM
To SPARK PLUG
No. 1 IGNITION COIL
No. 2 IGNITION COIL
No. 3 IGNITION COIL
No. 4 IGNITION COIL
BLK/WHT
8
C101
YEL
P
BLK
G101

(cont'd)

System Description (cont'd)

PCM Circuit Diagram (cont'd)

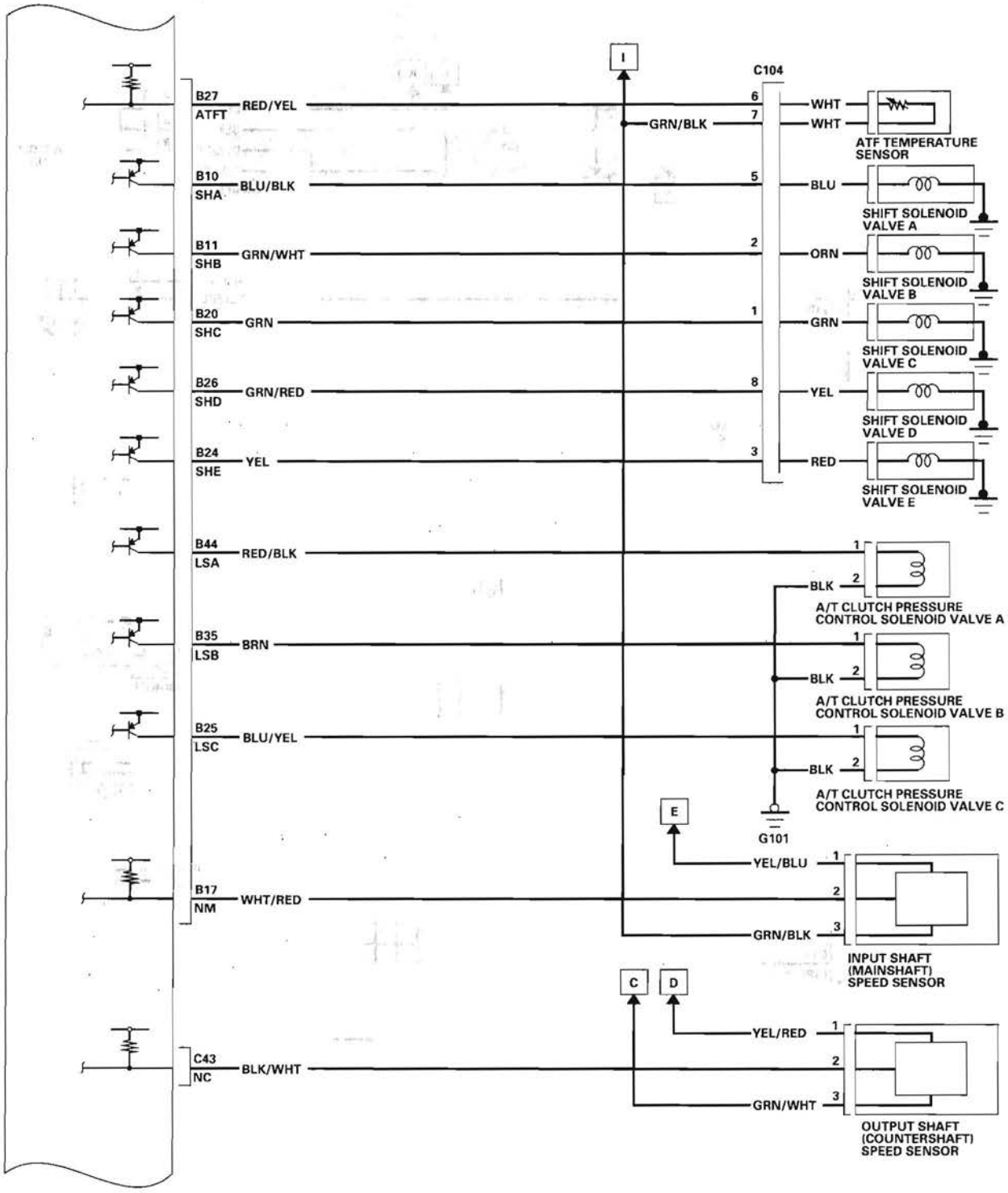

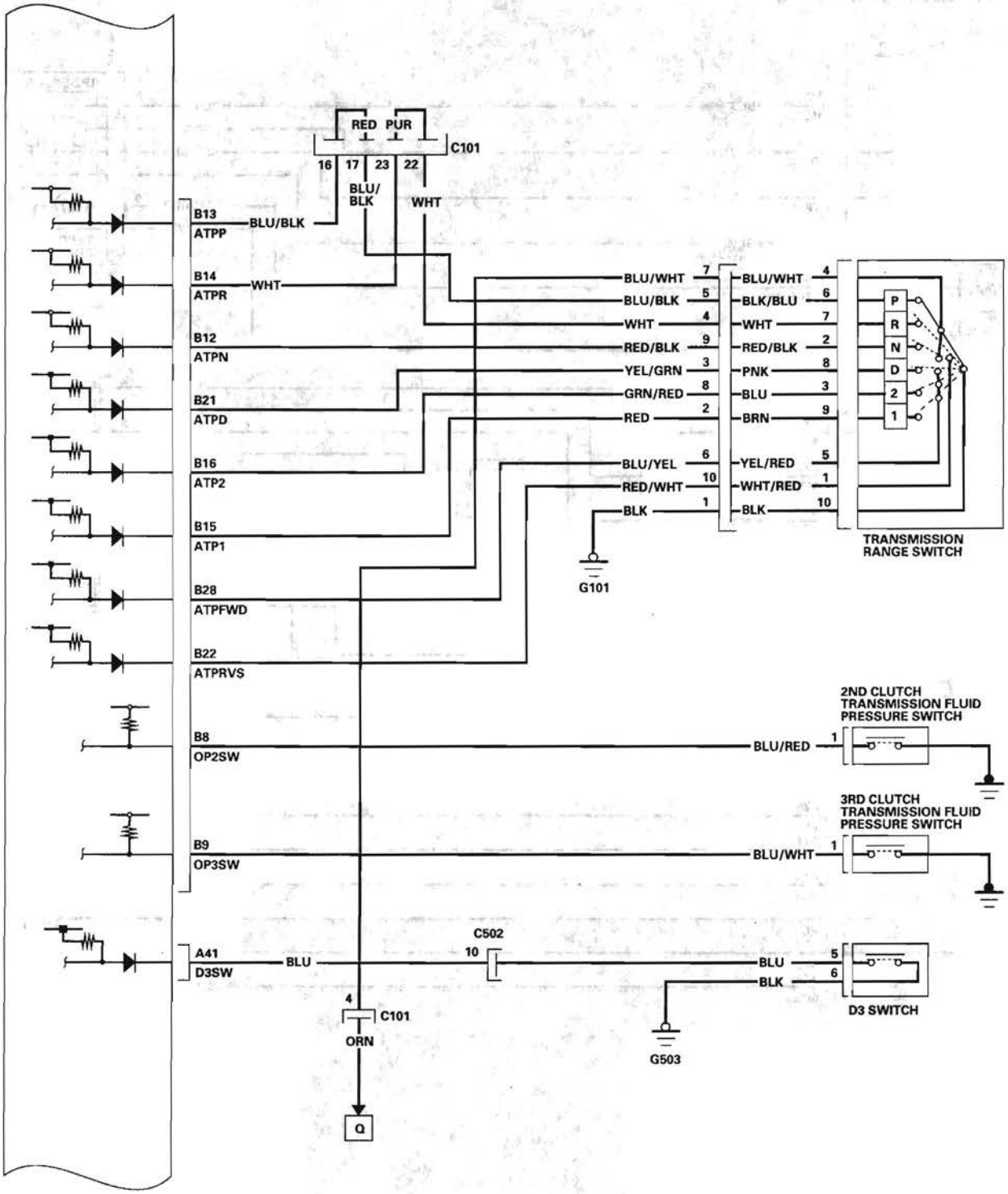
RED
PUR
C101
16
17
23
22
BLU/
BLK
WHT
B13
ATPP
BLU/BLK
B14
ATPR
WHT
B12
ATPN
B21
ATPD
B16
ATP2
B15
ATP1
B28
ATPFWD
B22
ATPRVS
B8
OP2SW
B9
OP3SW
A41
D3SW
BLU
BLU/WHT
BLU/BLK
WHT
RED/BLK
YEL/GRN
GRN/RED
RED
BLU/YEL
RED/WHT
BLK
BLU/WHT
BLK/BLU
WHT
RED/BLK
PNK
BLU
BRN
YEL/RED
WHT/RED
BLK
P
R
N
D
2
1
TRANSMISSION
RANGE SWITCH
G101
2ND CLUTCH
TRANSMISSION FLUID
PRESSURE SWITCH
BLU/RED
3RD CLUTCH
TRANSMISSION FLUID
PRESSURE SWITCH
BLU/WHT
C502
10
BLU
BLK
D3 SWITCH
G503
4
C101
ORN
Q

(cont'd)

System Description (cont'd)

PCM Circuit Diagram (cont'd)

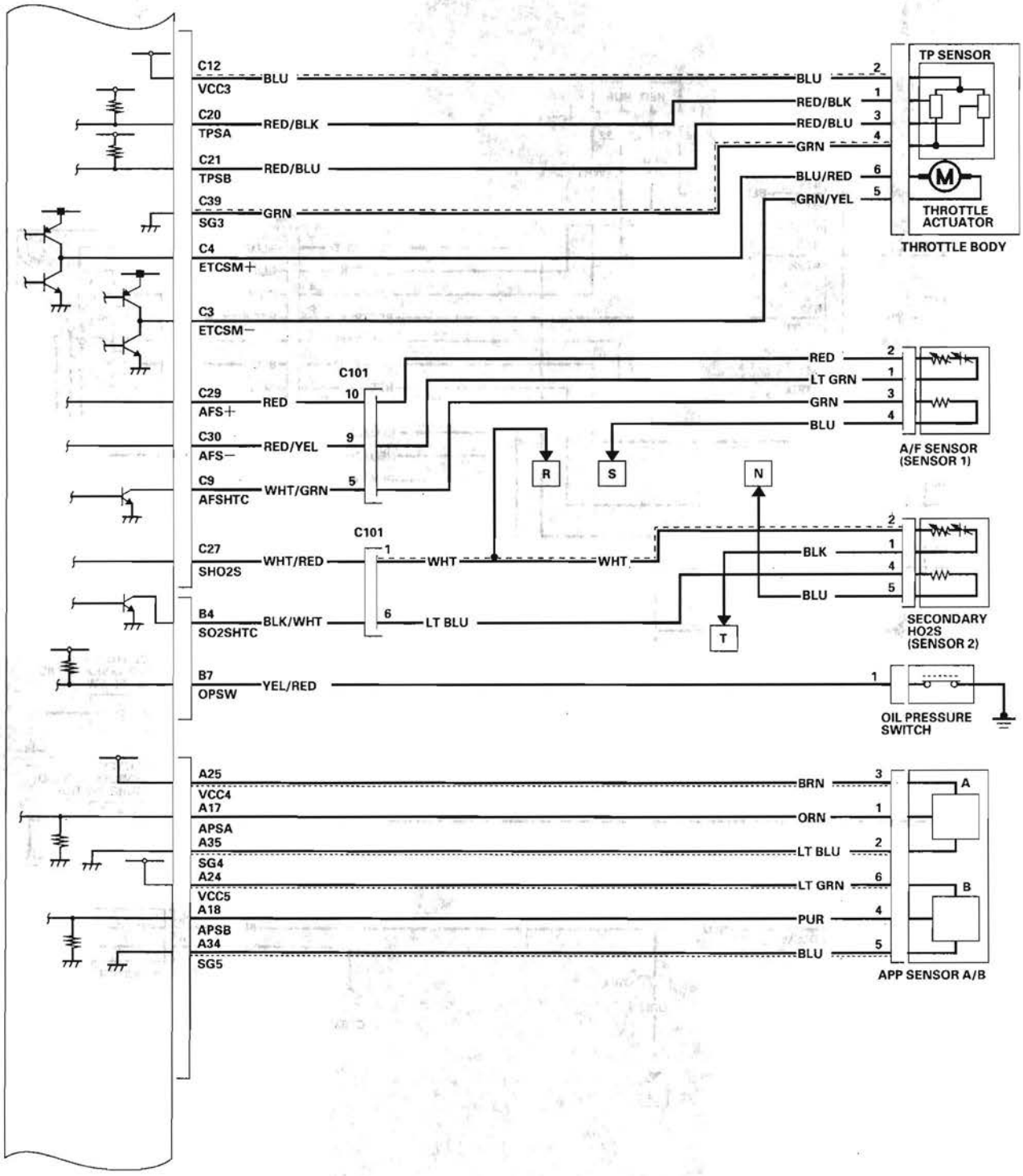

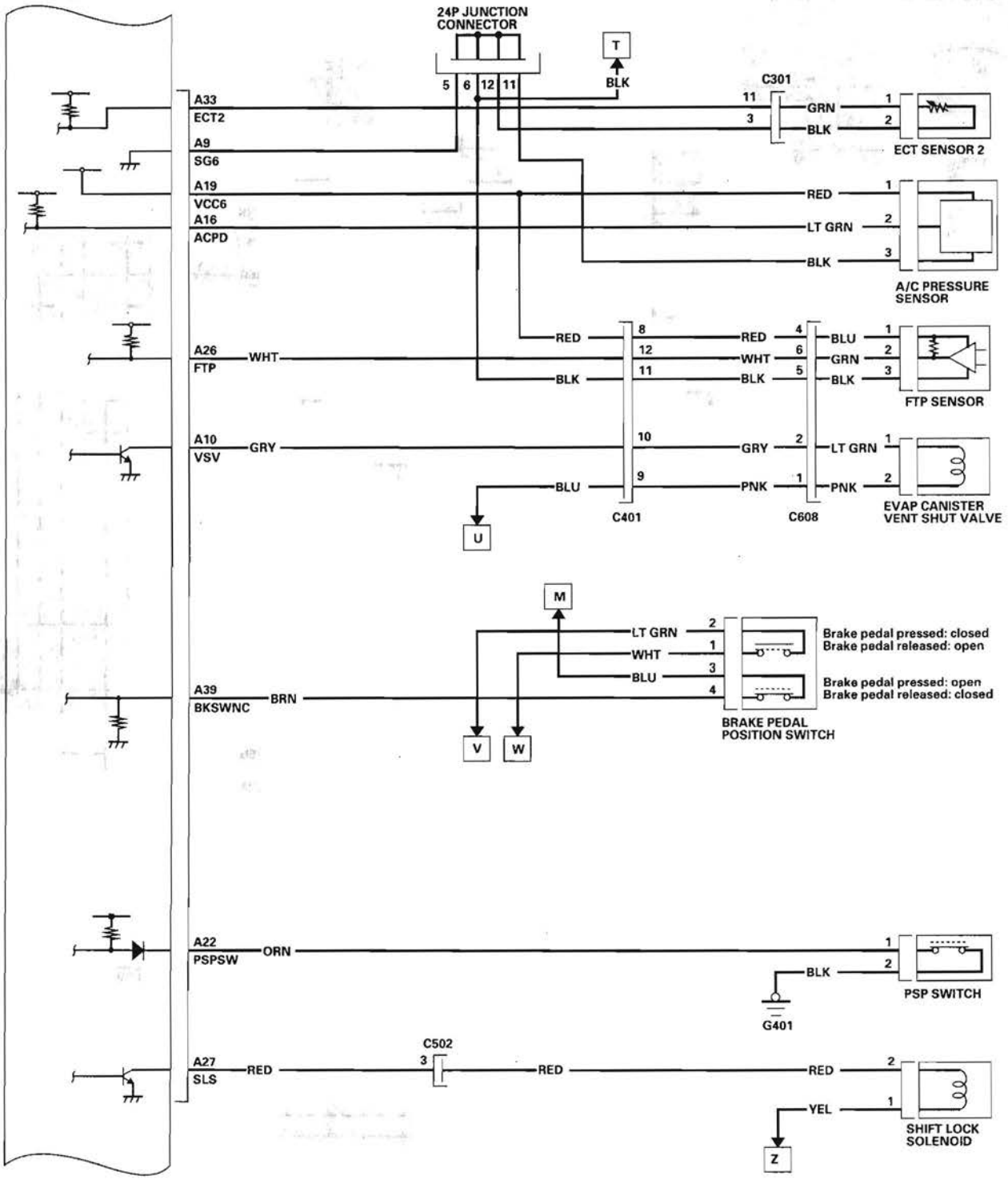
24P JUNCTION CONNECTOR
5 6 12 11
T
BLK
C301
A33
ECT2
A9
SG6
11
3
GRN
BLK
1
2
ECT SENSOR 2
A19
VCC6
A16
ACPD
RED
LT GRN
BLK
1
2
3
A/C PRESSURE SENSOR
A26
FTP
WHT
RED
BLK
8
12
11
RED
WHT
BLK
4
6
5
BLU
GRN
BLK
1
2
3
FTP SENSOR
A10
VSV
GRY
10
9
GRY
PNK
2
1
LT GRN
PNK
1
2
EVAP CANISTER VENT SHUT VALVE
U
C401
C608
M
LT GRN
WHT
BLU
2
1
3
4
Brake pedal pressed: closed
Brake pedal released: open
Brake pedal pressed: open
Brake pedal released: closed
A39
BKSWNC
BRN
V
W
BRAKE PEDAL POSITION SWITCH
A22
PSPSW
ORN
BLK
1
2
PSP SWITCH
G401
C502
A27
SLS
RED
3
RED
RED
YEL
2
1
SHIFT LOCK SOLENOID
Z

(cont'd)

System Description (cont'd)

PCM Circuit Diagram (cont'd)

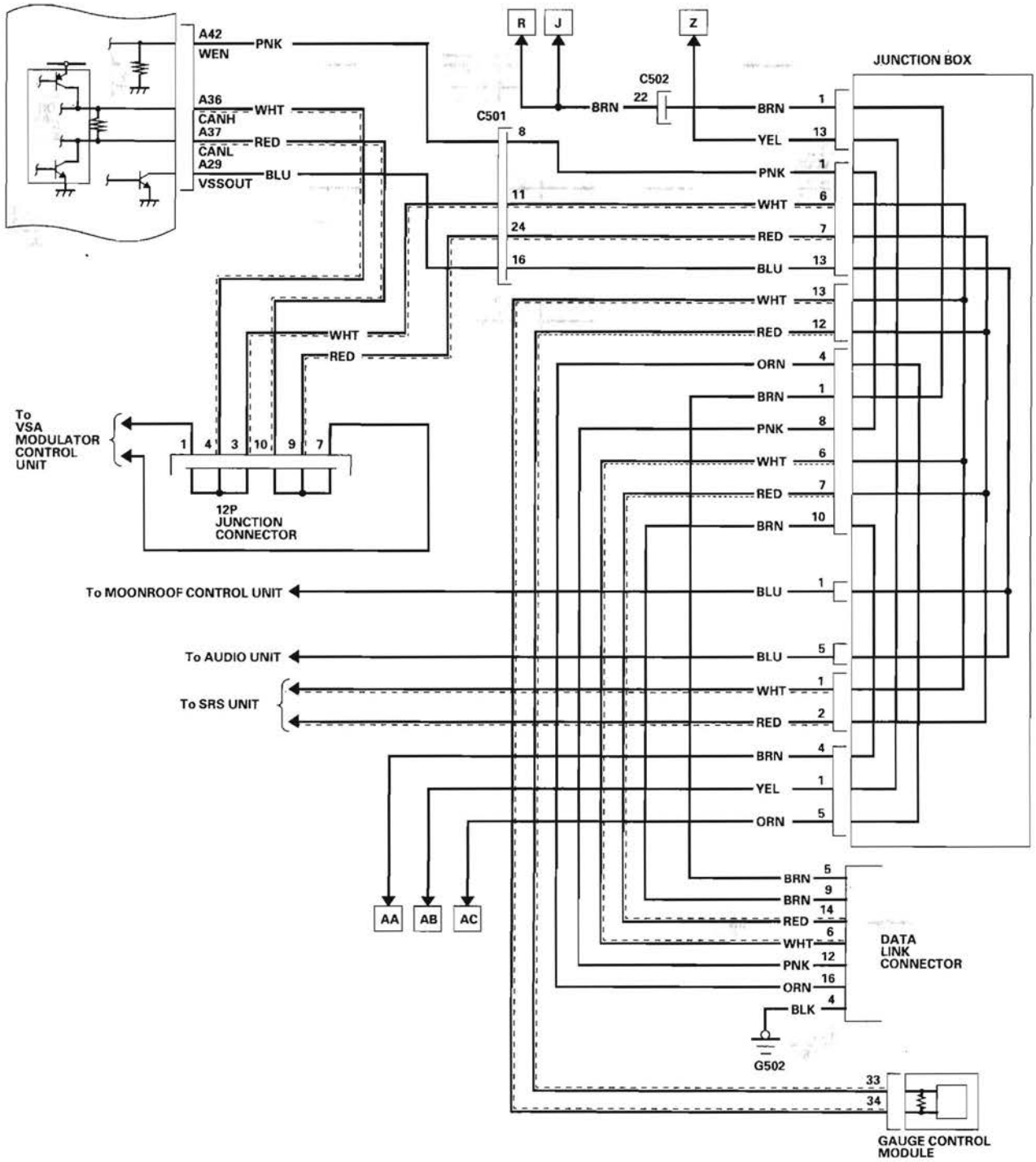

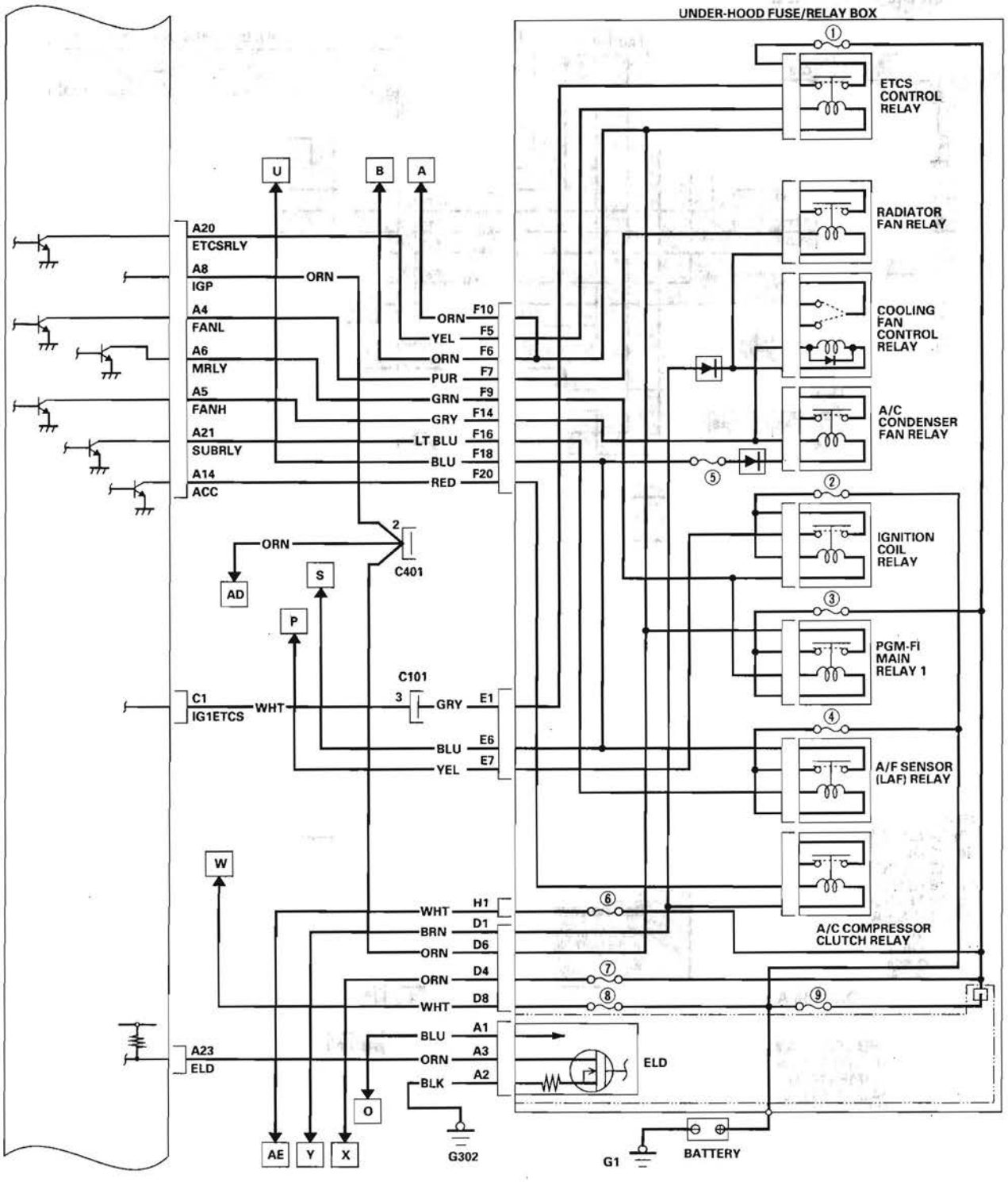
UNDER-HOOD FUSE/RELAY BOX
ETCS CONTROL RELAY
RADIATOR FAN RELAY
COOLING FAN CONTROL RELAY
A/C CONDENSER FAN RELAY
IGNITION COIL RELAY
PGM-FI MAIN RELAY 1
A/F SENSOR (LAF) RELAY
A/C COMPRESSOR CLUTCH RELAY
A20 ETCSRLY
A8 IGP
A4 FANL
A6 MRLY
A5 FANH
A21 SUBRLY
A14 ACC
ORN
ORN F10
YEL F5
ORN F6
PUR F7
GRN F9
GRY F14
LT BLU F16
BLU F18
RED F20
U
B
A
C401
AD
S
P
C101
C1 IG1ETCS
WHT
GRY E1
BLU E6
YEL E7
W
WHT H1
BRN D1
ORN D6
ORN D4
WHT D8
A23 ELD
BLU A1
ORN A3
BLK A2
ELD
O
AE
Y
X
G302
G1
BATTERY

(cont'd)

System Description (cont'd)

PCM Circuit Diagram (cont'd)

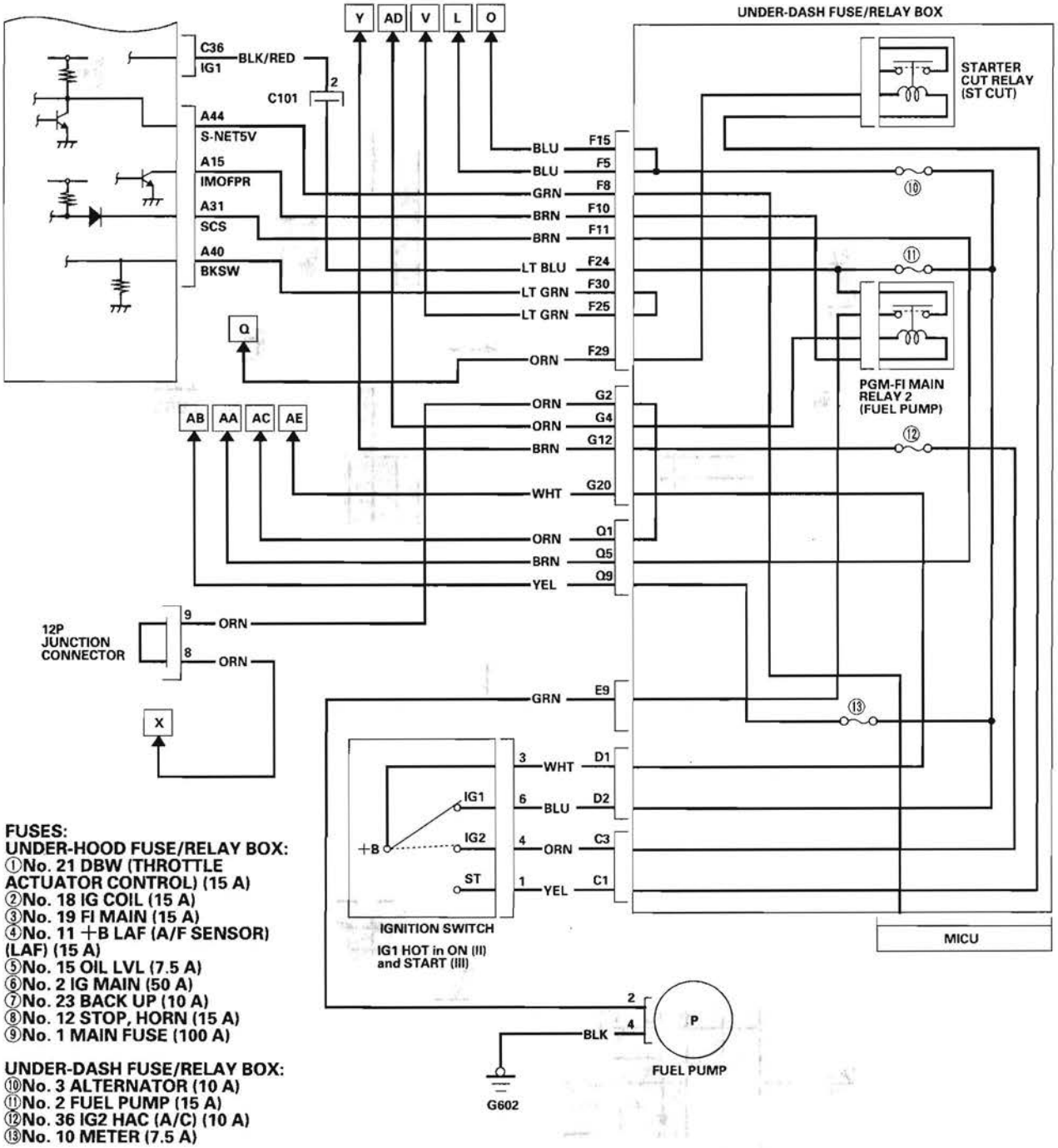

FUSES:
UNDER-HOOD FUSE/RELAY BOX:
①No. 21 DBW (THROTTLE ACTUATOR CONTROL) (15 A)
②No. 18 IG COIL (15 A)
③No. 19 FI MAIN (15 A)
④No. 11 +B LAF (A/F SENSOR) (LAF) (15 A)
⑤No. 15 OIL LVL (7.5 A)
⑥No. 2 IG MAIN (50 A)
⑦No. 23 BACK UP (10 A)
⑧No. 12 STOP, HORN (15 A)
⑨No. 1 MAIN FUSE (100 A)

UNDER-DASH FUSE/RELAY BOX:
⑩No. 3 ALTERNATOR (10 A)
⑪No. 2 FUEL PUMP (15 A)
⑫No. 36 IG2 HAC (A/C) (10 A)
⑬No. 10 METER (7.5 A)

How to Set Readiness Codes

Malfunction Indicator Lamp (MIL) Indication (In relation to Readiness Codes)

The vehicle has certain "readiness codes" that are part of the on-board diagnostics for the emissions systems. If the vehicle's battery has been disconnected or gone dead, if the DTCs have been cleared, or if the PCM has been reset, these readiness codes are reset to incomplete. In some states, part of the emissions testing is to make sure these codes are set to complete. If all of them are not set to complete, the vehicle may fail the emission test, or the test cannot be finished.

To check if the readiness codes are set to complete, turn the ignition switch ON (II), but do not start the engine. The MIL will come on for 15—20 seconds. If it then goes off, the readiness codes are set to complete. If it flashes five times, one or more readiness codes are not set to complete. To set readiness codes from incomplete to complete, do the procedure for the appropriate code.

To check the status of a specific DTC system, check the OBD status in the DTC MENU with the HDS (see page 11-9). This screen displays the code, the current data list of the enable criteria, and the status of the readiness testing.

Catalytic Converter Monitor and Readiness Code

NOTE:
- Do not turn the ignition switch off during the procedure.
- All readiness codes are cleared when the battery is disconnected, if the DTCs have been cleared, or if the PCM is reset with the HDS.
- Low ambient temperatures or excessive stop-and-go traffic may increase the drive time needed to switch the readiness code from incomplete to complete.
- The readiness code will not switch to complete until all the enable criteria are met.
- If a fault in the secondary HO2S system caused the MIL to come on, the readiness code cannot be set to complete until you correct the fault.

Enable Criteria

- ECT SENSOR 1 at 158 °F (70 °C) or more.
- Intake air temperature (IAT SENSOR) at 20 °F (—7 °C) or more.
- Vehicle speed sensor (VSS) above 25 mph (40 km/h).

Procedure

1. Connect the HDS to the vehicle's data link connector (DLC), and bring up the READINESS CODEs screen for Catalyst in the DTCs MENU.
2. Start the engine.
3. Test-drive the vehicle under stop-and-go conditions with short periods of steady cruise. After about 5 miles (8 km), the readiness code should switch to complete.
4. If the readiness code is still not set to complete, check for a Temporary DTC with the HDS. If there is no DTC, one or more of the enable criteria were probably not met; repeat the procedure.

(cont'd)

How to Set Readiness Codes (cont'd)

Evaporative Emission (EVAP) Control System Monitor and Readiness Code

NOTE: All readiness codes are cleared when the battery is disconnected, if the DTCs have been cleared, or if the PCM is reset with the HDS.

Enable Criteria

- Battery voltage is more than 10.5 V.
- Engine at idle.
- ECT SENSOR 1 and 2 between 176 °F (80 °C) and 212 °F (100 °C).
- MAP sensor less than 46.6 kPa (14 in.Hg, 350 mmHg).
- Vehicle speed 0 mph (0 km/h).
- IAT SENSOR between 32 °F (0 °C) and 212 °F (100 °C).

Procedure

1. Connect the HDS to the DLC.
2. Start the engine.
3. Select EVAP TEST in the INSPECTION MENU with the HDS, then select the FUNCTION TEST in the EVAP TEST MENU.
   - If the result is normal, readiness is complete.
   - If the result is not normal, go to the next step.
4. Check for a Temporary DTC. If there is no DTC, one or more of the enable criteria were probably not met; repeat the procedure.

Air Fuel Ratio (A/F) Sensor Monitor and Readiness Code

NOTE:
- Do not turn the ignition switch off during the procedure.
- All readiness codes are cleared when the battery is disconnected, if the DTCs have been cleared, or if the PCM is reset with the HDS.

Enable Criteria

ECT SENSOR 1 at 140 °F (60 °C) or more.

Procedure

1. Start the engine.
2. Test-drive the vehicle under stop-and-go conditions with short periods of steady cruise. During the drive, decelerate (with the throttle fully closed) for 5 seconds. After about 3.5 miles (5.6 km), the readiness code should switch from incomplete to complete.
3. Check the readiness codes screen for the AIR FUEL RATIO (A/F) SENSOR in the DTCs MENU with the HDS.
   - If the screen shows complete, readiness is complete.
   - If the screen shows not complete, go to the next step.
4. Check for a Temporary DTC. If there is no DTC, the enable criteria was probably not met. Select the DATA LIST MENU. Check the ECT SENSOR 2 in the ALL DATA LIST with the HDS. If the ECT SENSOR 2 is less than 140 °F (60 °C), run the engine until it is more than 140 °F (60 °C), then repeat the procedure.

Air Fuel Ratio (A/F) Sensor Heater Monitor Readiness Code

NOTE: All readiness codes are cleared when the battery is disconnected, if the DTCs have been cleared, or if the PCM is reset with the HDS.

Procedure

1. Start the engine, and let it idle for 1 minute. The readiness code should switch from incomplete to complete.
2. If the readiness code is still not set to complete, check for a Temporary DTC. If there is no DTC, repeat the procedure.

Misfire Monitor and Readiness Code

- This readiness code is always set to available because misfiring is continuously monitored.
- Monitoring pauses, and the misfire counter resets, if the vehicle is driven over a rough road.
- Monitoring also pauses, and the misfire counter holds at its current value, if the throttle position changes more than a predetermined value, or if driving conditions fall outside the range of any related enable criteria.

Fuel System Monitor and Readiness Code

- This readiness code is always set to available because the fuel system is continuously monitored during closed loop operation.
- Monitoring pauses when the catalytic converter, EVAP control system, and A/F sensor monitors are active.
- Monitoring also pauses when any related enable criteria are not being met. Monitoring resumes when the enable criteria is again being met.

Comprehensive Component Monitor and Readiness Code

This readiness code is always set to available because the comprehensive component monitor is continuously running whenever the engine is cranking or running.

EGR Monitor and Readiness Code

NOTE:
- Do not turn the ignition switch off during the procedure.
- All readiness codes are cleared when the battery is disconnected, if the DTCs have been cleared, or if the PCM is reset with the HDS.

Enable Criteria

ECT at 176 °F (80 °C) or more.

Procedure

1. Connect the HDS to the DLC.
2. Start the engine.
3. Drive at a steady speed with the transmission in D position, at 50—62 mph (80—100 km/h) or above for more than 10 seconds.
4. With the transmission in D position, decelerate from 62 mph (100 km/h) or above by completely releasing the throttle for at least 5 seconds. If the engine is stopped during this procedure, go to step 3 and do the procedure again.
5. Check the OBD status screen for DTC P0401 in the DTC's MENU with the HDS.
   - If it is passed, readiness is complete.
   - If it is not passed, go to step 3 and retest.

Component Location Index

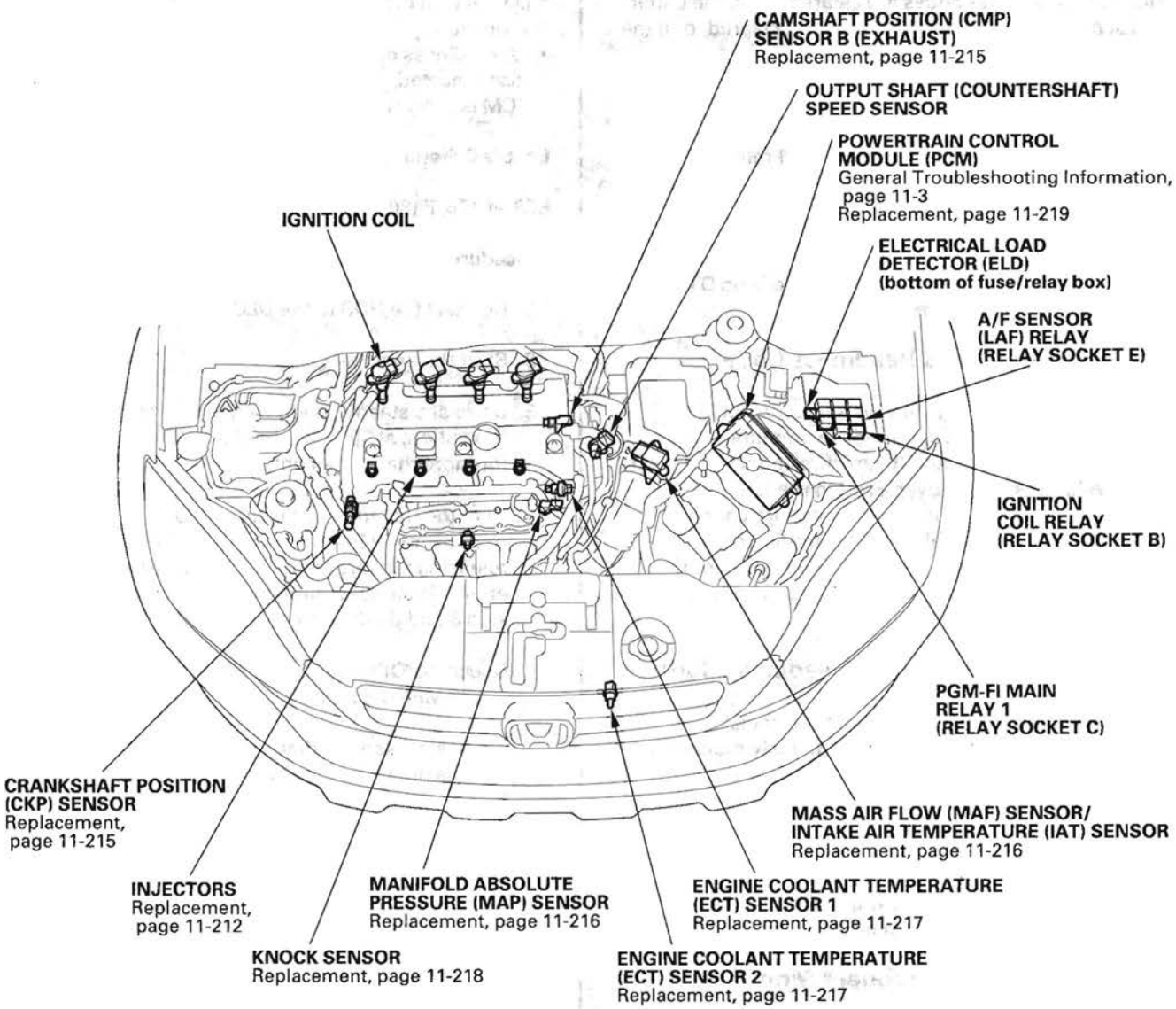

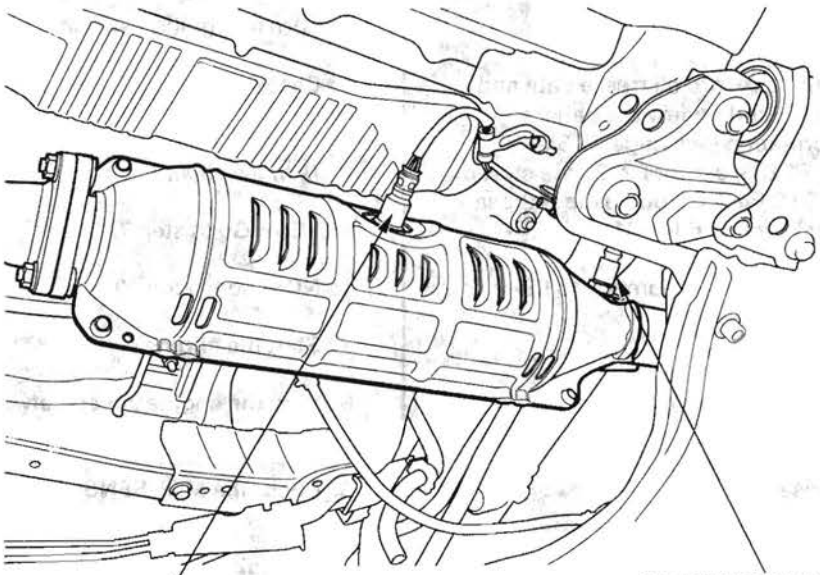

SECONDARY HEATED OXYGEN SENSOR (SECONDARY HO2S) (SENSOR 2)
Replacement, page 11-214

AIR FUEL RATIO (A/F) SENSOR (SENSOR 1)
Replacement, page 11-214

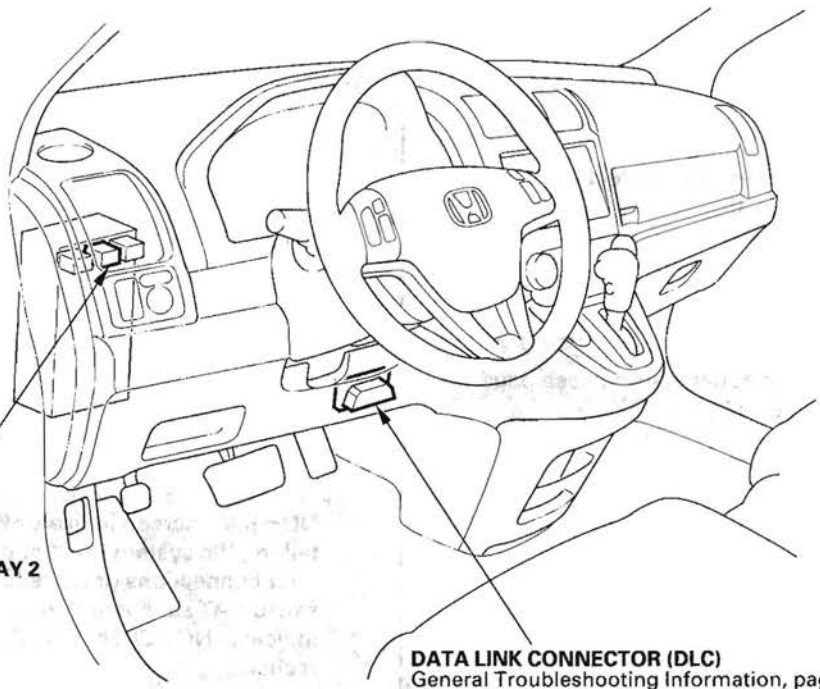

PGM-FI MAIN RELAY 2 (FUEL PUMP)

DATA LINK CONNECTOR (DLC)
General Troubleshooting Information, page 11-3
Circuit Troubleshooting, page 11-197

DTC Troubleshooting

DTC P0101: MAF Sensor Range/Performance Problem

NOTE:
- Before you troubleshoot, record all freeze data and any on-board snapshot, and review the general troubleshooting information (see page 11-3).
- If DTC P1128, P1129, P2228, and/or P2229 are stored at the same time as DTC P0101, troubleshoot those DTCs first, then recheck for DTC P0101.

1. Check for poor connections or damage to these parts:

   - PCV hose
   - Air intake duct
   - Air cleaner
   - Purge (PCS) line
   - Brake booster hose

   Are the parts OK?

   YES—Go to step 2.

   NO—Repair or replace the damaged parts, then go to step 15.

2. Check for damage or looseness at the air duct in the air cleaner.

   Is it OK?

   YES—Go to step 3.

   NO—Reconnect or replace the air duct in the air cleaner, then go to step 15.

3. Check for a dirty air cleaner element.

   Is it dirty?

   YES—Replace the air cleaner element (see page 11-340), then go to step 15.

   NO—Go to step 4.

4. Turn the ignition switch OFF.

5. Turn the ignition switch ON (II).

6. Check the MAF SENSOR in the DATA LIST with the HDS.

   Is there about 0.2 gm/s or 0.5 V?

   YES—Go to step 7.

   NO—Go to step 13.

7. Start the engine.

8. Vary the engine speed between 2,000 rpm and 3,000 rpm.

9. Check the MAF SENSOR in the DATA LIST with the HDS.

   Does the reading change?

   YES—Go to step 10.

   NO—Go to step 13.

10. Hold the engine speed at 3,000 rpm without load (in Park or neutral) until the radiator fan comes on, then let it idle.

11. Test-drive the vehicle for several minutes in the range of these recorded freeze data parameters:

    - ENGINE SPEED
    - VSS
    - MAP SENSOR
    - MAF SENSOR

12. Monitor the OBD STATUS for DTC P0101 in the DTCs MENU with the HDS.

    Does the screen indicate FAILED?

    YES—Go to step 13.

    NO—If the screen indicates PASSED, intermittent failure, the system is OK at this time. Check for poor connections or loose terminals at the MAF sensor/IAT sensor and the PCM. If the screen indicates NOT COMPLETED, go to step 11 and recheck.

13. Turn the ignition switch OFF.

14. Replace the MAF sensor/IAT sensor (see page 11-216).

15. Turn the ignition switch ON (II).

16. Reset the PCM with the HDS.

17. Do the PCM idle learn procedure (see page 11-304).

18. Test-drive the vehicle for several minutes in the range of these recorded freeze data parameters:

    - ENGINE SPEED
    - VSS
    - MAP SENSOR
    - MAF SENSOR

19. Check for Temporary DTCs or DTCs with the HDS.

    Is DTC P0101 indicated?

    YES—Check for poor connections or loose terminals at the MAF sensor/IAT sensor and the PCM, then go to step 1.

    NO—Go to step 20.

20. Monitor the OBD STATUS for DTC P0101 in the DTCs MENU with the HDS.

    Does the screen indicate PASSED?

    YES—Troubleshooting is complete. If any other Temporary DTCs or DTCs were indicated in step 19, go to the indicated DTC's troubleshooting. ■

    NO—If the screen indicates FAILED, check for poor connections or loose terminals at the MAF sensor/IAT sensor and the PCM, then go to step 1. If the screen indicates NOT COMPLETED, go to step 18.

DTC Troubleshooting (cont'd)

DTC P0102: MAF Sensor Circuit Low Voltage

NOTE: Before you troubleshoot, record all freeze data and any on-board snapshot, and review the general troubleshooting information (see page 11-3).

1. Turn the ignition switch ON (II), and wait 2 seconds.
2. Check the MAF SENSOR in the DATA LIST with the HDS.

   Is about 0 gm/s, or 0.1 V or less indicated?

   YES—Go to step 3.

   NO—Intermittent failure, the system is OK at this time. Check for poor connections or loose terminals at the MAF sensor/IAT sensor and the PCM. ■
3. Check the No. 3 ALTERNATOR (10 A) fuse in the under-dash fuse/relay box.

   Is the fuse OK?

   YES—Go to step 4.

   NO—Repair short in the wire between the MAF sensor and the No. 3 ALTERNATOR (10 A) fuse. Also replace the No. 3 ALTERNATOR (10 A) fuse, then go to step 20.
4. Turn the ignition switch OFF.
5. Disconnect the MAF sensor/IAT sensor 5P connector.
6. Turn the ignition switch ON (II).
7. Measure voltage between MAF sensor/IAT sensor 5P connector terminal No. 3 and body ground.

MAF SENSOR/IAT SENSOR 5P CONNECTOR

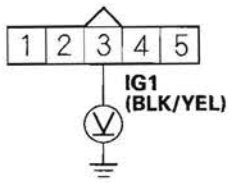

Wire side of female terminals

Is there battery voltage?

YES—Go to step 8.

NO—Repair open in the wire between the No. 3 ALTERNATOR (10 A) fuse and the MAF sensor, then go to step 20.

8. Turn the ignition switch OFF.
9. Measure resistance between MAF sensor/IAT sensor 5P connector terminal No. 1 and body ground.

MAF SENSOR/IAT SENSOR 5P CONNECTOR

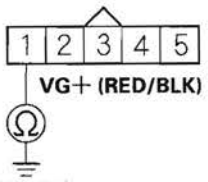

Wire side of female terminals

Is there 190—210 kΩ ?

YES—Go to step 14.

NO—Go to step 10.

10. Jump the SCS line with the HDS.

11. Disconnect PCM connector B (44P).

12. Check for continuity between PCM connector terminal B30 and body ground.

PCM CONNECTOR B (44P)

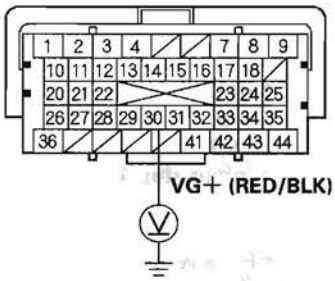

Terminal side of female terminals

Is there continuity?

YES—Repair short in the wire between the PCM (B30) and the MAF sensor, then go to step 21.

NO—Go to step 13.

13. Check for continuity between MAF sensor/IAT sensor 5P connector terminal No. 1 and PCM connector terminal B30.

MAF SENSOR/IAT SENSOR 5P CONNECTOR

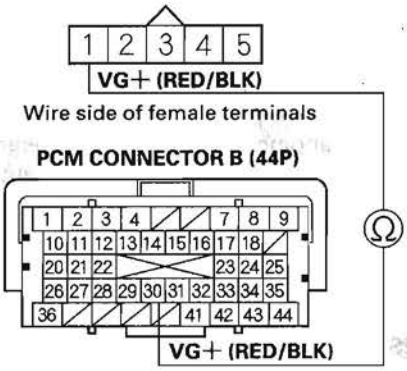

Terminal side of female terminals

Is there continuity?

YES—Go to step 26.

NO—Repair open in the wire between the PCM (B30) and the MAF sensor, then go to step 21.

(cont'd)

DTC Troubleshooting (cont'd)

14. Substitute a known-good MAF sensor/IAT sensor (see page 11-216).
15. Reconnect all connectors.
16. Turn the ignition switch ON (II).
17. Clear the DTC with the HDS.
18. Start the engine. Hold the engine speed at 2,000 rpm without load (in Park or neutral).
19. Check for Temporary DTCs or DTCs with the HDS.

    Is DTC P0102 indicated?

    YES—Go to step 27.

    NO—Replace the original MAF sensor/IAT sensor (see page 11-216), then go to step 20.
20. Turn the ignition switch OFF.
21. Reconnect all connectors.
22. Turn the ignition switch ON (II).
23. Reset the PCM with the HDS.
24. Do the PCM idle learn procedure (see page 11-304).
25. Check for Temporary DTCs or DTCs with the HDS.

    Is DTC P0102 indicated?

    YES—Check for poor connections or loose terminals at the MAF sensor/IAT sensor and the PCM, then go to step 1.

    NO—Troubleshooting is complete. If any other Temporary DTCs or DTCs are indicated, go to the indicated DTC's troubleshooting. ■
26. Reconnect all connectors.
27. Update the PCM if it does not have the latest software (see page 11-7), or substitute a known-good PCM (see page 11-8).
28. Check for Temporary DTCs or DTCs with the HDS.

    Is DTC P0102 indicated?

    YES—Check for poor connections or loose terminals at the MAF sensor/IAT sensor and the PCM. If the PCM was updated, substitute a known-good PCM (see page 11-8), then recheck. If the PCM was substituted, go to step 1.

    NO—If the PCM was updated, troubleshooting is complete. If the PCM was substituted, replace the original PCM (see page 11-219). If any other Temporary DTCs or DTCs are indicated, go to the indicated DTC's troubleshooting. ■

DTC P0103: MAF Sensor Circuit High Voltage

NOTE: Before you troubleshoot, record all freeze data and any on-board snapshot, and review the general troubleshooting information (see page 11-3).

1. Turn the ignition switch ON (II), and wait 2 seconds.
2. Check the MAF SENSOR in the DATA LIST with the HDS.

   Is about 202 gm/s, or 4.89 V or more indicated?

   YES—Go to step 3.

   NO—Intermittent failure, the system is OK at this time. Check for poor connections or loose terminals at the MAF sensor/IAT sensor and the PCM. ■
3. Turn the ignition switch OFF.
4. Jump the SCS line with the HDS.
5. Disconnect the MAF sensor/IAT sensor 5P connector.
6. Disconnect PCM connector B (44P).
7. Check for continuity between MAF sensor/IAT sensor 5P connector terminal No. 2 and PCM connector terminal B32.

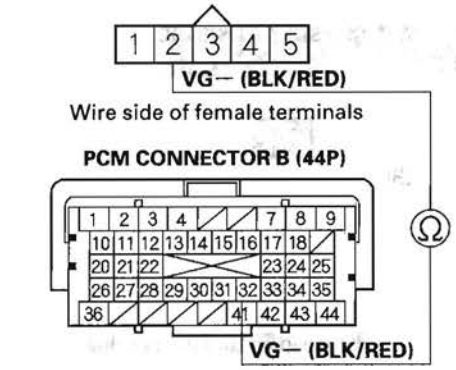

Is there continuity?

YES—Go to step 8.

NO—Repair open in the wire between the PCM (B32) and the MAF sensor, then go to step 15.

(cont'd)

DTC Troubleshooting (cont'd)

8. Reconnect PCM connector B (44P).
9. Connect MAF sensor/IAT sensor 5P connector terminals No. 1 and No. 2 with a jumper wire.

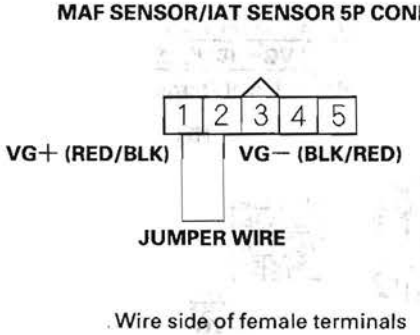

10. Turn the ignition switch ON (II).
11. Clear the DTC with the HDS.
12. Check for Temporary DTCs or DTCs with the HDS.

    Is DTC P0103 indicated?

    YES—Go to step 20.

    NO—Go to step 13.
13. Turn the ignition switch OFF.
14. Replace the MAF sensor/IAT sensor (see page 11-216).
15. Reconnect all connectors.
16. Turn the ignition switch ON (II).
17. Reset the PCM with the HDS.
18. Do the PCM idle learn procedure (see page 11-304).
19. Check for Temporary DTCs or DTCs with the HDS.

    Is DTC P0103 indicated?

    YES—Check for poor connections or loose terminals at the MAF sensor/IAT sensor and the PCM, then go to step 1.

    NO—Troubleshooting is complete. If any other Temporary DTCs or DTCs are indicated, go to the indicated DTC's troubleshooting. ■
20. Reconnect all connectors.
21. Update the PCM if it does not have the latest software (see page 11-7), or substitute a known-good PCM (see page 11-8).
22. Check for Temporary DTCs or DTCs with the HDS.

    Is DTC P0103 indicated?

    YES—Check for poor connections or loose terminals at the MAF sensor/IAT sensor and the PCM. If the PCM was updated, substitute a known-good PCM (see page 11-8), then recheck. If the PCM was substituted, go to step 1.

    NO—If the PCM was updated, troubleshooting is complete. If the PCM was substituted, replace the original PCM (see page 11-219). If any other Temporary DTCs or DTCs are indicated, go to the indicated DTC's troubleshooting. ■

DTC P0107: MAP Sensor Circuit Low Voltage

NOTE: Before you troubleshoot, record all freeze data and any on-board snapshot, and review the general troubleshooting information (see page 11-3).

1. Turn the ignition switch ON (II).
2. Check the MAP SENSOR in the DATA LIST with the HDS.

   Is about 3 kPa (1.0 in.Hg, 26 mmHg), or 0.23 V or less indicated?

   YES—Go to step 3.

   NO—Intermittent failure, the system is OK at this time. Check for poor connections or loose terminals at the MAP sensor and the PCM. ■
3. Turn the ignition switch OFF.
4. Disconnect the MAP sensor 3P connector.
5. Turn the ignition switch ON (II).
6. Check the MAP SENSOR in the DATA LIST with the HDS.

   Is about 3 kPa (1.0 in.Hg, 26 mmHg), or 0.23 V or less indicated?

   YES—Go to step 12.

   NO—Go to step 7.
7. Measure voltage between MAP sensor 3P connector terminals No. 1 and No. 3.

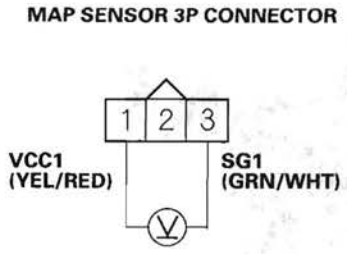

Wire side of female terminals

Is there about 5 V?

YES—Go to step 16.

NO—Go to step 8.

8. Turn the ignition switch OFF.
9. Jump the SCS line with the HDS.
10. Disconnect PCM connector C (44P).
11. Check for continuity between PCM connector terminal C13 and MAP sensor 3P connector terminal No. 1.

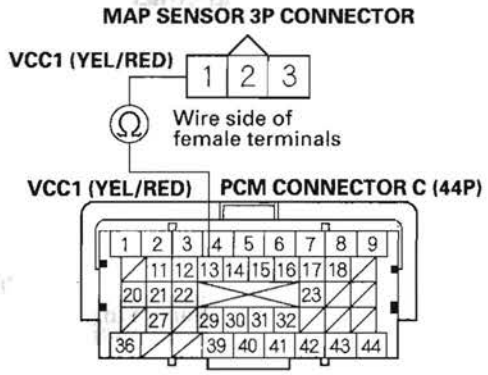

Terminal side of female terminals

Is there continuity?

YES—Go to step 23.

NO—Repair open in the wire between the PCM (C13) and the MAP sensor, then go to step 18.

(cont'd)

DTC Troubleshooting (cont'd)

12. Turn the ignition switch OFF.
13. Jump the SCS line with the HDS.
14. Disconnect PCM connector C (44P).
15. Check for continuity between MAP sensor 3P connector terminal No. 2 and body ground.

MAP SENSOR 3P CONNECTOR

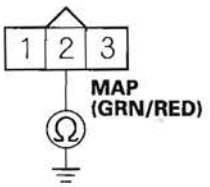

Wire side of female terminals

Is there continuity?

YES—Repair short in the wire between the PCM (C11) and the MAP sensor, then go to step 18.

NO—Go to step 23.

16. Turn the ignition switch OFF.
17. Replace the MAP sensor (see page 11-216).
18. Reconnect all connectors.
19. Turn the ignition switch ON (II).
20. Reset the PCM with the HDS.
21. Do the PCM idle learn procedure (see page 11-304).
22. Check for Temporary DTCs or DTCs with the HDS.

Is DTC P0107 indicated?

YES—Check for poor connections or loose terminals at the MAP sensor and the PCM, then go to step 1.

NO—Troubleshooting is complete. If any other Temporary DTCs or DTCs are indicated, go to the indicated DTC's troubleshooting. ■

23. Reconnect all connectors.
24. Update the PCM if it does not have the latest software (see page 11-7), or substitute a known-good PCM (see page 11-8).
25. Check for Temporary DTCs or DTCs with the HDS.

Is DTC P0107 indicated?

YES—Check for poor connections or loose terminals at the MAP sensor and the PCM. If the PCM was updated, substitute a known-good PCM (see page 11-8), then recheck. If the PCM was substituted, go to step 1.

NO—If the PCM was updated, troubleshooting is complete. If the PCM was substituted, replace the original PCM (see page 11-219). If any other Temporary DTCs or DTCs are indicated, go to the indicated DTC's troubleshooting. ■

DTC P0108: MAP Sensor Circuit High Voltage

NOTE: Before you troubleshoot, record all freeze data and any on-board snapshot, and review the general troubleshooting information (see page 11-3).

1. Turn the ignition switch ON (II).
2. Check the MAP SENSOR in the DATA LIST with the HDS.

   Is about 160 kPa (47.1 in.Hg, 1,197 mmHg), or 4.49 V or more indicated?

   YES—Go to step 3.

   NO—Intermittent failure, the system is OK at this time. Check for poor connections or loose terminals at the MAP sensor and the PCM. ■
3. Turn the ignition switch OFF.
4. Disconnect the MAP sensor 3P connector.
5. Connect MAP sensor 3P connector terminals No. 2 and No. 3 with a jumper wire.

MAP SENSOR 3P CONNECTOR

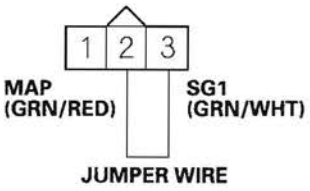

Wire side of female terminals

6. Turn the ignition switch ON (II).
7. Check the MAP SENSOR in the DATA LIST with the HDS.

   Is about 160 kPa (47.1 in.Hg, 1,197 mmHg), or 4.49 V or more indicated?

   YES—Go to step 8.

   NO—Go to step 18.
8. Remove the jumper wire from the MAP sensor 3P connector.
9. Measure voltage between MAP sensor 3P connector terminals No. 1 and No. 3.

MAP SENSOR 3P CONNECTOR

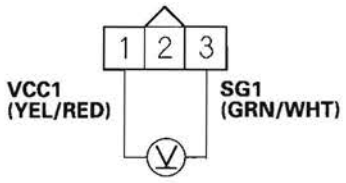

Wire side of female terminals

Is there about 5 V?

YES—Go to step 14.

NO—Go to step 10.

(cont'd)

DTC Troubleshooting (cont'd)

10. Turn the ignition switch OFF.
11. Jump the SCS line with the HDS.
12. Disconnect PCM connector C (44P).
13. Check for continuity between PCM connector terminal C14 and MAP sensor 3P connector terminal No. 3.

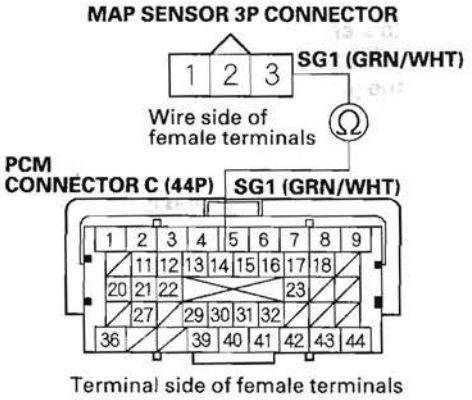

Is there continuity?

YES—Go to step 25.

NO—Repair open in the wire between the PCM (C14) and the MAP sensor, then go to step 20.

14. Turn the ignition switch OFF.
15. Jump the SCS line with the HDS.
16. Disconnect PCM connector C (44P).
17. Check for continuity between PCM connector terminal C11 and MAP sensor 3P connector terminal No. 2.

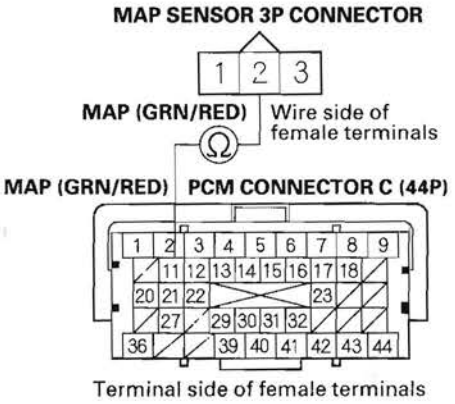

Is there continuity?

YES—Go to step 25.

NO—Repair open in the wire between the PCM (C11) and the MAP sensor, then go to step 20.

18. Turn the ignition switch OFF.
19. Replace the MAP sensor (see page 11-216).
20. Reconnect all connectors.
21. Turn the ignition switch ON (II).
22. Reset the PCM with the HDS.
23. Do the PCM idle learn procedure (see page 11-304).
24. Check for Temporary DTCs or DTCs with the HDS.

    Is DTC P0108 indicated?

    YES—Check for poor connections or loose terminals at the MAP sensor and the PCM, then go to step 1.

    NO—Troubleshooting is complete. If any other Temporary DTCs or DTCs are indicated, go to the indicated DTC's troubleshooting. ■
25. Reconnect all connectors.
26. Update the PCM if it does not have the latest software (see page 11-7), or substitute a known-good PCM (see page 11-8).
27. Check for Temporary DTCs or DTCs with the HDS.

    Is DTC P0108 indicated?

    YES—Check for poor connections or loose terminals at the MAP sensor and the PCM. If the PCM was updated, substitute a known-good PCM (see page 11-8), then recheck. If the PCM was substituted, go to step 1.

    NO—If the PCM was updated, troubleshooting is complete. If the PCM was substituted, replace the original PCM (see page 11-219). If any other Temporary DTCs or DTCs are indicated, go to the indicated DTC's troubleshooting. ■

DTC Troubleshooting (cont'd)

DTC P0111: IAT Sensor Circuit Range/ Performance Problem

NOTE: Before you troubleshoot, record all freeze data and any on-board snapshot, and review the general troubleshooting information (see page 11-3).

1. Check for poor connections or loose terminals at ECT sensor 1/2 and the IAT sensor.

   Are the connections and terminals OK?

   YES—Go to step 2.

   NO—Repair the connectors or terminals, then go to step 15.

2. Remove the MAF sensor/IAT sensor (see page 11-216).

3. Allow the IAT sensor to cool to the ambient temperature.

4. Note the ambient temperature.

5. Connect the MAF sensor/IAT sensor to the 5P connector, but do not install the sensor onto the air cleaner.

6. Turn the ignition switch ON (II).

7. Note the value of the IAT SENSOR quickly in the DATA LIST with the HDS.

8. Compare the value of the IAT SENSOR and the ambient temperature.

   Does the value of the IAT SENSOR differ 5.4 °F (3 °C) or more?

   YES—Go to step 13.

   NO—Go to step 9.

9. Disconnect the MAF sensor/IAT sensor from the 5P connector.

10. Using a heat gun, blow hot air on the MAF sensor/ IAT sensor for a few seconds. Do not apply the heat longer than a few seconds or you will damage the sensor.

11. Connect the MAF sensor/IAT sensor to the 5P connector, but do not install the sensor onto the air cleaner.

12. Check the IAT SENSOR in the DATA LIST with the HDS.

    Does the IAT SENSOR change 58 °F (32 °C) or more?

    YES—Intermittent failure, the system is OK at this time. Check for poor connections or loose terminals at the MAF sensor/IAT sensor and the PCM. ■

    NO—Go to step 13.

13. Turn the ignition switch OFF.

14. Replace the MAF sensor/IAT sensor (see page 11-216).

15. Turn the ignition switch ON (II).

16. Reset the PCM with the HDS.

17. Do the PCM idle learn procedure (see page 11-304).

18. Check for Temporary DTCs or DTCs with the HDS.

    Is DTC P0111 indicated?

    YES—Check for poor connections or loose terminals at the MAF sensor/IAT sensor and the PCM, then go to step 1.

    NO—Troubleshooting is complete. If any other Temporary DTCs or DTCs are indicated, go to the indicated DTC's troubleshooting. ■

DTC P0112: IAT Sensor Circuit Low Voltage

NOTE: Before you troubleshoot, record all freeze data and any on-board snapshot, and review the general troubleshooting information (see page 11-3).

1. Turn the ignition switch ON (II).
2. Check the IAT SENSOR in the DATA LIST with the HDS.

   Is about 356 °F (180 °C) or more, or 0.08 V or less indicated?

   YES—Go to step 3.

   NO—Intermittent failure, the system is OK at this time. Check for poor connections or loose terminals at the MAF sensor/IAT sensor and the PCM. ■
3. Turn the ignition switch OFF.
4. Disconnect the MAF sensor/IAT sensor 5P connector.
5. Turn the ignition switch ON (II).
6. Check the IAT SENSOR in the DATA LIST with the HDS.

   Is about 356 °F (180 °C) or more, or 0.08 V or less indicated?

   YES—Go to step 7.

   NO—Go to step 11.
7. Turn the ignition switch OFF.
8. Jump the SCS line with the HDS.
9. Disconnect PCM connector B (44P).
10. Check for continuity between MAF sensor/IAT sensor 5P connector terminal No. 5 and body ground.

    MAF SENSOR/IAT SENSOR 5P CONNECTOR

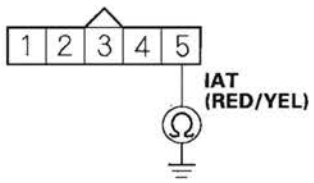

Wire side of female terminals

Is there continuity?

YES—Repair short in the wire between the IAT sensor and the PCM (B31), then go to step 13.

NO—Go to step 18.

11. Turn the ignition switch OFF.
12. Replace the MAF sensor/IAT sensor (see page 11-216).
13. Reconnect all connectors.
14. Turn the ignition switch ON (II).
15. Reset the PCM with the HDS.
16. Do the PCM idle learn procedure (see page 11-304).

(cont'd)

DTC Troubleshooting (cont'd)

17. Check for Temporary DTCs or DTCs with the HDS.

    Is DTC P0112 indicated?

    YES—Check for poor connections or loose terminals at the MAF sensor/IAT sensor and the PCM, then go to step 1.

    NO—Troubleshooting is complete. If any other Temporary DTCs or DTCs are indicated, go to the indicated DTC's troubleshooting. ■

18. Reconnect all connectors.

19. Update the PCM if it does not have the latest software (see page 11-7), or substitute a known-good PCM (see page 11-8).

20. Check for Temporary DTCs or DTCs with the HDS.

    Is DTC P0112 indicated?

    YES—Check for poor connections or loose terminals at the MAF sensor/IAT sensor and the PCM. If the PCM was updated, substitute a known-good PCM (see page 11-8), then recheck. If the PCM was substituted, go to step 1.

    NO—If the PCM was updated, troubleshooting is complete. If the PCM was substituted, replace the original PCM (see page 11-219). If any other Temporary DTCs or DTCs are indicated, go to the indicated DTC's troubleshooting. ■

DTC P0113: IAT Sensor Circuit High Voltage

NOTE: Before you troubleshoot, record all freeze data and any on-board snapshot, and review the general troubleshooting information (see page 11-3).

1. Turn the ignition switch ON (II).
2. Check the IAT SENSOR in the DATA LIST with the HDS.

   Is about −40 °F (−40 °C) or less, or 4.90 V or higher indicated?

   YES—Go to step 3.

   NO—Intermittent failure, the system is OK at this time. Check for poor connections or loose terminals at the MAF sensor/IAT sensor and the PCM. ■
3. Turn the ignition switch OFF.
4. Disconnect the MAF sensor/IAT sensor 5P connector.
5. Connect MAF sensor/IAT sensor 5P connector terminals No. 4 and No. 5 with a jumper wire.

MAF SENSOR/IAT SENSOR 5P CONNECTOR

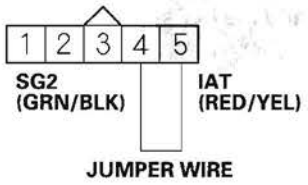

Wire side of female terminals

6. Turn the ignition switch ON (II).
7. Check the IAT SENSOR in the DATA LIST with the HDS.

   Is about −40 °F (−40 °C) or less, or 4.90 V or higher indicated?

   YES—Go to step 8.

   NO—Go to step 20
8. Turn the ignition switch OFF.
9. Remove the jumper wire from the MAF sensor/IAT sensor 5P connector.
10. Turn the ignition switch ON (II).
11. Measure voltage between MAF sensor/IAT sensor 5P connector terminal No. 5 and body ground.

MAF SENSOR/IAT SENSOR 5P CONNECTOR

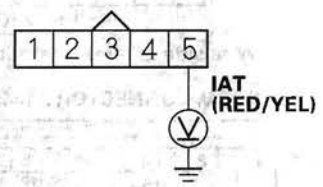

Wire side of female terminals

Is there about 5 V?

YES—Go to step 12.

NO—Go to step 16.

(cont'd)

DTC Troubleshooting (cont'd)

12. Turn the ignition switch OFF.
13. Jump the SCS line with the HDS.
14. Disconnect PCM connector B (44P).
15. Check for continuity between MAF sensor/IAT sensor 5P connector terminal No. 4 and PCM connector terminal B33.

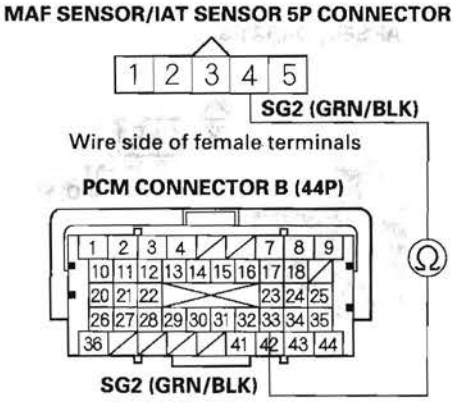

Is there continuity?

YES—Go to step 27.

NO—Repair open in the wire between the PCM (B33) and the IAT sensor, then go to step 22.

16. Turn the ignition switch OFF.
17. Jump the SCS line with the HDS.
18. Disconnect PCM connector B (44P).
19. Check for continuity between MAF sensor/IAT sensor 5P connector terminal No. 5 and PCM connector terminal B31.

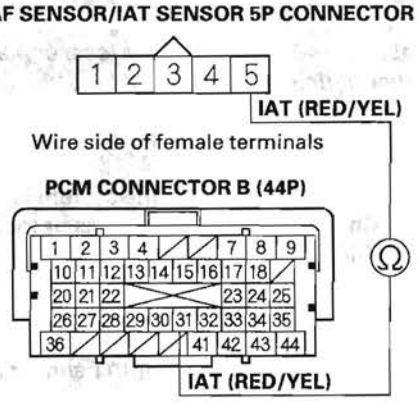

Is there continuity?

YES—Go to step 27.

NO—Repair open in the wire between the PCM (B31) and the IAT sensor, then go to step 22.

20. Turn the ignition switch OFF.

21. Replace the MAF sensor/IAT sensor (see page 11-216).

22. Reconnect all connectors.

23. Turn the ignition switch ON (II).

24. Reset the PCM with the HDS.

25. Do the PCM idle learn procedure (see page 11-304).

26. Check for Temporary DTCs or DTCs with the HDS.

    Is DTC P0113 indicated?

    YES—Check for poor connections or loose terminals at the MAF sensor/IAT sensor and the PCM, then go to step 1.

    NO—Troubleshooting is complete. If any other Temporary DTCs or DTCs are indicated, go to the indicated DTC's troubleshooting. ■

27. Reconnect all connectors.

28. Update the PCM if it does not have the latest software (see page 11-7), or substitute a known-good PCM (see page 11-8).

29. Check for Temporary DTCs or DTCs with the HDS.

    Is DTC P0113 indicated?

    YES—Check for poor connections or loose terminals at the MAF sensor/IAT sensor and the PCM. If the PCM was updated, substitute a known-good PCM (see page 11-8), then recheck. If the PCM was substituted, go to step 1.

    NO—If the PCM was updated, troubleshooting is complete. If the PCM was substituted, replace the original PCM (see page 11-219). If any other Temporary DTCs or DTCs are indicated, go to the indicated DTC's troubleshooting. ■

DTC Troubleshooting (cont'd)

DTC P0116: ECT Sensor 1 Range/ Performance Problem

NOTE: Before you troubleshoot, record all freeze data and any on-board snapshot, and review the general troubleshooting information (see page 11-3).

1. Turn the ignition switch ON (II).
2. Check ECT SENSOR 1 in the DATA LIST with the HDS.

   Is about 176 °F (80 °C) or more, or 0.78 V or less indicated?

   YES—Go to step 6.

   NO—Go to step 3.
3. Note the value of ECT SENSOR 1 in the DATA LIST with the HDS.
4. Start the engine. Hold the engine speed at 3,000 rpm without load (in Park or neutral) until the radiator fan comes on, then let it idle.
5. Check ECT SENSOR 1 in the DATA LIST with the HDS.

   Does ECT SENSOR 1 change 18 °F (10 °C) or more?

   YES—Intermittent failure, the system is OK at this time. Check for poor connections or loose terminals at ECT sensor 1 and the PCM. ■

   NO—Go to step 11.
6. Note the value of ECT SENSOR 1 in the DATA LIST with the HDS.
7. Turn the ignition switch OFF.
8. Open the hood, and let the engine cool for 3 hours.
9. Turn the ignition switch ON (II).
10. Check ECT SENSOR 1 in the DATA LIST with the HDS.

    Does ECT SENSOR 1 change 18 °F (10 °C) or more?

    YES—Intermittent failure, the system is OK at this time. Check for poor connections or loose terminals at ECT sensor 1 and the PCM. ■

    NO—Go to step 11.
11. Turn the ignition switch OFF.
12. Replace ECT sensor 1 (see page 11-217).
13. Turn the ignition switch ON (II).
14. Reset the PCM with the HDS.
15. Do the PCM idle learn procedure (see page 11-304).
16. Check for Temporary DTCs or DTCs with the HDS.

    Is DTC P0116 indicated?

    YES—Check for poor connections or loose terminals at ECT sensor 1 and the PCM, then go to step 1.

    NO—Troubleshooting is complete. If any other Temporary DTCs or DTCs are indicated, go to the indicated DTC's troubleshooting. ■

DTC P0117: ECT Sensor 1 Circuit Low Voltage

NOTE: Before you troubleshoot, record all freeze data and any on-board snapshot, and review the general troubleshooting information (see page 11-3).

1. Turn the ignition switch ON (II).
2. Check ECT SENSOR 1 in the DATA LIST with the HDS.

   Is about 356 °F (180 °C) or more, or 0.08 V or less indicated?

   YES—Go to step 3.

   NO—Intermittent failure, the system is OK at this time. Check for poor connections or loose terminals at ECT sensor 1 and the PCM. ■
3. Turn the ignition switch OFF.
4. Disconnect the ECT sensor 1 2P connector.
5. Turn the ignition switch ON (II).
6. Check ECT SENSOR 1 in the DATA LIST with the HDS.

   Is about 356 °F (180 °C) or more, or 0.08 V or less indicated?

   YES—Go to step 7.

   NO—Go to step 11.
7. Turn the ignition switch OFF.
8. Jump the SCS line with the HDS.
9. Disconnect PCM connector B (44P).
10. Check for continuity between ECT sensor 1 2P connector terminal No. 1 and body ground.

ECT SENSOR 1 2P CONNECTOR

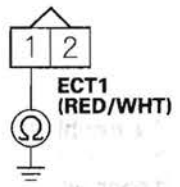

Wire side of female terminals

Is there continuity?

YES—Repair short in the wire between ECT sensor 1 and the PCM (B23), then go to step 13.

NO—Go to step 18.

11. Turn the ignition switch OFF.
12. Replace ECT sensor 1 (see page 11-217).
13. Reconnect all connectors.
14. Turn the ignition switch ON (II).
15. Reset the PCM with the HDS.
16. Do the PCM idle learn procedure (see page 11-304).

(cont'd)

DTC Troubleshooting (cont'd)

17. Check for Temporary DTCs or DTCs with the HDS.

    Is DTC P0117 indicated?

    YES—Check for poor connections or loose terminals at ECT sensor 1 and the PCM, then go to step 1.

    NO—Troubleshooting is complete. If any other Temporary DTCs or DTCs are indicated, go to the indicated DTC's troubleshooting.■

18. Reconnect all connectors.

19. Update the PCM if it does not have the latest software (see page 11-7), or substitute a known-good PCM (see page 11-8).

20. Check for Temporary DTCs or DTCs with the HDS.

    Is DTC P0117 indicated?

    YES—Check for poor connections or loose terminals at ECT sensor 1 and the PCM. If the PCM was updated, substitute a known-good PCM (see page 11-8), then recheck. If the PCM was substituted, go to step 1.

    NO—If the PCM was updated, troubleshooting is complete. If the PCM was substituted, replace the original PCM (see page 11-219). If any other Temporary DTCs or DTCs are indicated, go to the indicated DTC's troubleshooting.■

DTC P0118: ECT Sensor 1 Circuit High Voltage

NOTE: Before you troubleshoot, record all freeze data and any on-board snapshot, and review the general troubleshooting information (see page 11-3).

1. Turn the ignition switch ON (II).
2. Check ECT SENSOR 1 in the DATA LIST with the HDS.

   Is about −40 °F (−40 °C) or less, or 4.90 V or higher indicated?

   YES—Go to step 3.

   NO—Intermittent failure, the system is OK at this time. Check for poor connections or loose terminals at ECT sensor 1 and the PCM. ■
3. Turn the ignition switch OFF.
4. Disconnect the ECT sensor 1 2P connector.
5. Connect ECT sensor 1 2P connector terminals No. 1 and No. 2 with a jumper wire.

ECT SENSOR 1 2P CONNECTOR

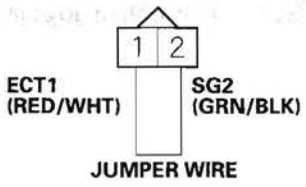

Wire side of female terminals

6. Turn the ignition switch ON (II).
7. Check ECT SENSOR 1 in the DATA LIST with the HDS.

   Is about −40 °F (−40 °C) or less, or 4.90 V or higher indicated?

   YES—Go to step 8.

   NO—Go to step 20
8. Turn the ignition switch OFF.
9. Remove the jumper wire from the ECT sensor 1 2P connector.
10. Turn the ignition switch ON (II).
11. Measure voltage between ECT sensor 1 2P connector terminal No. 1 and body ground.

ECT SENSOR 1 2P CONNECTOR

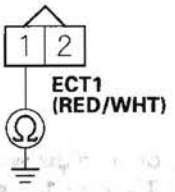

Wire side of female terminals

Is there about 5 V?

YES—Go to step 12.

NO—Go to step 16.

(cont'd)

DTC Troubleshooting (cont'd)

12. Turn the ignition switch OFF.
13. Jump the SCS line with the HDS.
14. Disconnect PCM connector B (44P).
15. Check for continuity between ECT sensor 1 2P connector terminal No. 2 and PCM connector terminal B33.

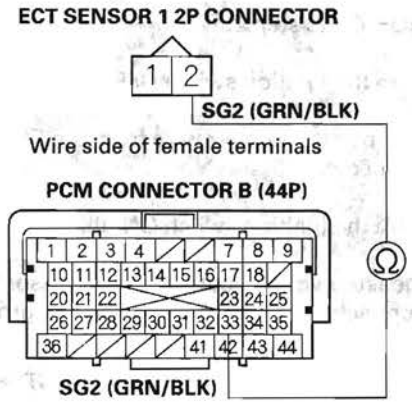

Is there continuity?

YES—Go to step 27.

NO—Repair open in the wire between the PCM (B33) and ECT sensor 1, then go to step 22.

16. Turn the ignition switch OFF.
17. Jump the SCS line with the HDS.
18. Disconnect PCM connector B (44P).
19. Check for continuity between ECT sensor 1 2P connector terminal No. 1 and PCM connector terminal B23.

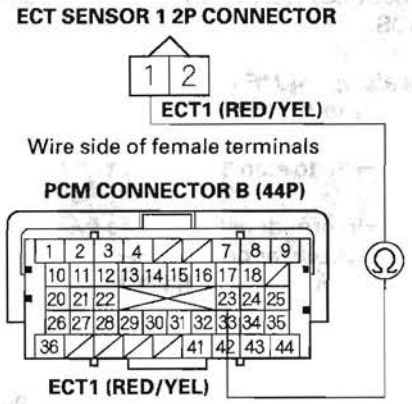

Is there continuity?

YES—Go to step 27.

NO—Repair open in the wire between the PCM (B23) and ECT sensor 1, then go to step 22.

20. Turn the ignition switch OFF.
21. Replace ECT sensor 1 (see page 11-217).
22. Reconnect all connectors.
23. Turn the ignition switch ON (II).
24. Reset the PCM with the HDS.
25. Do the PCM idle learn procedure (see page 11-304).
26. Check for Temporary DTCs or DTCs with the HDS.

    Is DTC P0118 indicated?

    YES—Check for poor connections or loose terminals at ECT sensor 1 and the PCM, then go to step 1.

    NO—Troubleshooting is complete. If any other Temporary DTCs or DTCs are indicated, go to the indicated DTC's troubleshooting.■
27. Reconnect all connectors.
28. Update the PCM if it does not have the latest software (see page 11-7), or substitute a known-good PCM (see page 11-8).
29. Check for Temporary DTCs or DTCs with the HDS.

    Is DTC P0118 indicated?

    YES—Check for poor connections or loose terminals at ECT sensor 1 and the PCM. If the PCM was updated, substitute a known-good PCM (see page 11-8), then recheck. If the PCM was substituted, go to step 1.

    NO—If the PCM was updated, troubleshooting is complete. If the PCM was substituted, replace the original PCM (see page 11-219). If any other Temporary DTCs or DTCs are indicated, go to the indicated DTC's troubleshooting.■

DTC Troubleshooting (cont'd)

DTC P0125: ECT Sensor 1 Malfunction/Slow Response

NOTE: Before you troubleshoot, record all freeze data and any on-board snapshot, and review the general troubleshooting information (see page 11-3).

1. Start the engine, and let it idle for 5 minutes or more.
2. Check ECT SENSOR 1 in the DATA LIST with the HDS.

   Is about 10 °F (−12 °C) or less, or 4.45 V or more indicated?

   YES—Go to step 9.

   NO—Go to step 3.
3. Allow the engine to cool to 104 °F (40 °C) or less.
4. Note the value of ECT SENSOR 1 and ECT SENSOR 2 in the DATA LIST with the HDS.
5. Start the engine, and let it idle.
6. Let the engine idle until ECT SENSOR 1 goes up 49 °F (27 °C) or more from the recorded temperature.
7. Note the value of ECT SENSOR 2 in the DATA LIST with the HDS.
8. Compare ECT SENSOR 2 and the recorded temperature.

   Did ECT SENSOR 2 change 17 °F (9.5 °C) or more?

   YES—Intermittent failure, the system is OK at this time. Check for poor connections or loose terminals at ECT sensor 1, ECT sensor 2, and the PCM. ■

   NO—Check the thermostat (see page 10-4). If the thermostat is OK, go to step 9. If the thermostat is faulty, replace it (see page 10-8), then go to step 11.
9. Turn the ignition switch OFF.
10. Replace ECT sensor 1 (see page 11-217).
11. Turn the ignition switch ON (II).
12. Reset the PCM with the HDS.
13. Do the PCM idle learn procedure (see page 11-304).
14. Allow the engine to cool to ambient temperature.
15. Start the engine, and let it idle for 20 minutes.
16. Check for Temporary DTCs or DTCs with the HDS.

    Is DTC P0125 indicated?

    YES—Check for poor connections or loose terminals at the ECT sensor 2 and the PCM, then go to step 1.

    NO—Go to step 17.
17. Monitor the OBD STATUS for DTC P0125 in the DTCs MENU with the HDS.

    Does the screen indicate PASSED?

    YES—Troubleshooting is complete. If any other Temporary DTCs or DTCs were indicated in step 16, go to the indicated DTC's troubleshooting. ■

    NO—If the screen indicates FAILED, check for poor connections or loose terminals at the ECT sensor 2 and the PCM, then go to step 1. If the screen indicates NOT COMPLETED, go to step 14.

DTC P0128: Cooling System Malfunction

NOTE: Before you troubleshoot, record all freeze data and any on-board snapshot, and review the general troubleshooting information (see page 11-3).

1. Turn the ignition switch ON (II).
2. Clear the DTC with the HDS.
3. Turn the blower switch OFF.
4. Check the FAN CTRL in the DATA LIST with the HDS.

   Is it OFF?

   YES—Go to step 5.

   NO—Wait until the FAN CTRL is off, then go to step 5.

5. Check the radiator fan operation.

   Does the radiator fan keep running?

   YES—Check the radiator fan circuit (see page 10-28), and the radiator fan relay (see page 22-66). If the circuits and the relay are OK, go to step 19.

   NO—Go to step 6.

6. Let the engine cool until the coolant temperature is 104 °F (40 °C) or less.
7. Note the value of ECT SENSOR 1 and ECT SENSOR 2 in the DATA LIST with the HDS.
8. Start the engine, and let it idle.
9. Let the engine idle until ECT SENSOR 1 goes up 49 °F (27 °C) or more from the recorded temperature.
10. Check ECT SENSOR 2 in the DATA LIST with the HDS.
11. Compare the value of recorded ECT SENSOR 2 and the present value of ECT SENSOR 2.

    Did the temperature rise 17 °F (9.5 °C) or more?

    YES—Intermittent failure, the system is OK at this time. Check for poor connections or loose terminals at ECT sensor 1, ECT sensor 2, and the PCM. ■

    NO—Test the thermostat (see page 10-4), then go to step 12.

12. Turn the ignition switch ON (II).
13. Reset the PCM with the HDS.
14. Let the engine cool until the coolant temperature is between 21 °F (−6 °C) and 104 °F (40 °C).
15. Do the PCM idle learn procedure (see page 11-304).
16. Test-drive at a steady speed between 15—75 mph (24—120 km/h) for 10 minutes.
17. Check for Temporary DTCs or DTCs with the HDS.

    Is DTC P0128 indicated?

    YES—Check the cooling system, then go to step 1.

    NO—Go to step 18.

18. Monitor the OBD STATUS for DTC P0128 in the DTCs MENU with the HDS.

    Does the screen indicate PASSED?

    YES—Troubleshooting is complete. If any other Temporary DTCs or DTCs were indicated in step 17, go to the indicated DTC's troubleshooting. ■

    NO—If the screen indicates FAILED, check the cooling system, then go to step 1. If the screen indicates NOT COMPLETED, go to step 14.

(cont'd)

DTC Troubleshooting (cont'd)

19. Update the PCM if it does not have the latest software (see page 11-7), or substitute a known-good PCM (see page 11-8).

20. Let the engine cool until the coolant temperature is between 21 °F (−6 °C) and 104 °F (40 °C).

21. Start the engine. Hold the engine speed at 3,000 rpm without load (in Park or neutral) until the radiator fan comes on, then let it idle.

22. Test-drive at a steady speed between 15—75 mph (24—120 km/h) for 10 minutes.

23. Check for Temporary DTCs or DTCs with the HDS.

    Is DTC P0128 indicated?

    YES—Check for poor connections or loose terminals at ECT sensor 1, ECT sensor 2, and the PCM. If the PCM was updated, substitute a known-good PCM (see page 11-8), then go to step 20. If the PCM was substituted, go to step 1.

    NO—Go to step 24.

24. Monitor the OBD STATUS for DTC P0128 in the DTCs MENU with the HDS.

    Does the screen indicate PASSED?

    YES—If the PCM was updated, troubleshooting is complete. If the PCM was substituted, replace the original PCM (see page 11-219). If any other Temporary DTCs or DTCs were indicated in step 23, go to the indicated DTC's troubleshooting. ■

    NO—If the screen indicates FAILED, check for poor connections or loose terminals at ECT sensor 1, ECT sensor 2, and the PCM. If the PCM was updated, substitute a known-good PCM (see page 11-8), then go to step 20. If the PCM was substituted, go to step 1. If the screen indicates NOT COMPLETED, go to step 20.

DTC P0133: A/F Sensor (Sensor 1) Response Malfunction/Slow Response

NOTE: Before you troubleshoot, record all freeze data and any on-board snapshot, and review the general troubleshooting information (see page 11-3).

1. Turn the ignition switch ON (II).
2. Clear the DTC with the HDS.
3. Start the engine. Hold the engine speed at 3,000 rpm without load (in Park or neutral) until the radiator fan comes on, then let it idle.
4. Test-drive under these conditions:
   - Engine coolant temperature (ECT SENSOR 1) above 176 °F (80 °C)
   - Transmission in D position
   - Drive the vehicle at 25 mph (40 km/h) or less for 5 minutes, then drive at a steady speed between 26—81 mph (41—130 km/h).
5. Monitor the OBD STATUS for DTC P0133 in the DTCs MENU with the HDS.

   Does the screen indicate FAILED?

   YES—Go to step 6.

   NO—If the screen indicates PASSED, intermittent failure, the system is OK at this time. Check for poor connections or loose terminals at the A/F sensor (Sensor 1) and the PCM. If the screen indicates EXECUTING, keep driving until a result comes on. If the screen indicates OUT OF CONDITION, go to step 3 and recheck.
6. Turn the ignition switch OFF.
7. Replace the A/F sensor (Sensor 1) (see page 11-214).
8. Turn the ignition switch ON (II).
9. Reset the PCM with the HDS.
10. Do the PCM idle learn procedure (see page 11-304).
11. Start the engine. Hold the engine speed at 3,000 rpm without load (in Park or neutral) until the radiator fan comes on, then let it idle.
12. Test-drive under these conditions:
    - Engine coolant temperature (ECT SENSOR 1) above 176 °F (80 °C)
    - Transmission in D position
    - Drive the vehicle at 25 mph (40 km/h) or less for 5 minutes, then drive at a steady speed between 26—81 mph (41—130 km/h).
13. Check for Temporary DTCs or DTCs with the HDS.

    Is DTC P0133 indicated?

    YES—Check for poor connections or loose terminals at the A/F sensor (Sensor 1) and the PCM, then go to step 1.

    NO—Go to step 14.
14. Monitor the OBD STATUS for DTC P0133 in the DTCs MENU with the HDS.

    Does the screen indicate PASSED?

    YES—Troubleshooting is complete. If any other Temporary DTCs or DTCs were indicated in step 13, go to the indicated DTC's troubleshooting. ■

    NO—If the screen indicates FAILED, check for poor connections or loose terminals at the A/F sensor (Sensor 1) and the PCM, then go to step 1. If the screen indicates EXECUTING, keep driving until a result comes on. If the screen indicates OUT OF CONDITION, go to step 11.

DTC Troubleshooting (cont'd)

DTC P0134: A/F Sensor (Sensor 1) Heater System Malfunction

NOTE:
- Before you troubleshoot, record all freeze data and any on-board snapshot, and review the general troubleshooting information (see page 11-3).
- If the vehicle was out of fuel and the engine stalled before this DTC was stored, refuel and clear the DTC with the HDS.
- If DTC P0135 is stored at the same time as DTC P0134, troubleshoot DTC P0135 first, then recheck for DTC P0134.

1. Turn the ignition switch ON (II).
2. Clear the DTC with the HDS.
3. Start the engine, and let it idle without load (in Park or neutral) until the radiator fan comes on.
4. Check for Temporary DTCs or DTCs with the HDS.

   Is DTC P0134 indicated?

   YES—Go to step 5.

   NO—Intermittent failure, the system is OK at this time. Check for poor connections or loose terminals at the A/F sensor (Sensor 1), the A/F sensor relay (LAF), and the PCM. ■
5. Turn the ignition switch OFF.
6. Replace the A/F sensor (Sensor 1) (see page 11-214).
7. Turn the ignition switch ON (II).
8. Reset the PCM with the HDS.
9. Do the PCM idle learn procedure (see page 11-304).
10. Check for Temporary DTCs or DTCs with the HDS.

    Is DTC P0134 indicated?

    YES—Check for poor connections or loose terminals at the A/F sensor (Sensor 1), the A/F sensor relay (LAF), and the PCM, then go to step 1.

    NO—Go to step 11.
11. Monitor the OBD STATUS for DTC P0134 in the DTCs MENU with the HDS.

    Does the screen indicate PASSED?

    YES—Troubleshooting is complete. If any other Temporary DTCs or DTCs were indicated in step 10, go to the indicated DTC's troubleshooting. ■

    NO—If the screen indicates FAILED, check for poor connections or loose terminals at the A/F sensor (Sensor 1), the A/F sensor relay (LAF), and the PCM, then go to step 1. If the screen indicates NOT COMPLETED, go to step 8.

DTC P0135: A/F Sensor (Sensor 1) Heater Circuit Malfunction

NOTE: Before you troubleshoot, record all freeze data and any on-board snapshot, and review the general troubleshooting information (see page 11-3).

1. Turn the ignition switch ON (II).
2. Clear the DTC with the HDS.
3. Start the engine. Hold the engine speed at 3,000 rpm without load (in Park or neutral) until the radiator fan comes on, then let it idle.
4. Check for Temporary DTCs or DTCs with the HDS.

   Is DTC P0135 indicated?

   YES—Go to step 5.

   NO—Intermittent failure, the system is OK at this time. Check for poor connections or loose terminals at the A/F sensor (Sensor 1), the A/F sensor relay (LAF), and the PCM. ■
5. Turn the ignition switch OFF.
6. Check the No. 11 +B LAF (A/F SENSOR) (15 A) fuse in the under-hood fuse/relay box.

   Is the fuse OK?

   YES—Go to step 7.

   NO—Go to step 20.
7. Test the A/F sensor relay (LAF) (E) in the under-hood fuse/relay box (see page 22-66).

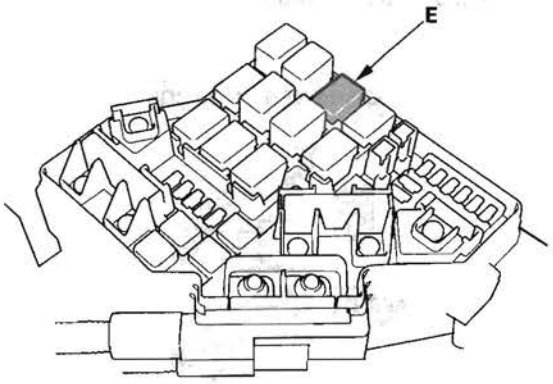

   Is the A/F sensor relay (LAF) OK?

   YES—Go to step 8.

   NO—Replace the A/F sensor relay (LAF), then go to step 24.
8. Disconnect the A/F sensor (Sensor 1) 4P connector.
9. At the sensor side, measure resistance between A/F sensor (Sensor 1) 4P connector terminals No. 3 and No. 4.

A/F SENSOR (SENSOR 1) 4P CONNECTOR

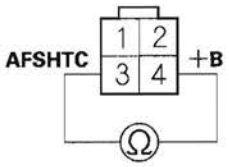

Wire side of female terminals

Is there 1.98 – 2.42 Ω at room temperature?

YES—Go to step 10.

NO—Go to step 24.

(cont'd)

DTC Troubleshooting (cont'd)

10. At the sensor side, check for continuity between A/F sensor (Sensor 1) 4P connector terminals No. 1 and No. 3, and between terminals No. 1 and No. 4 individually.

A/F SENSOR (SENSOR 1) 4P CONNECTOR

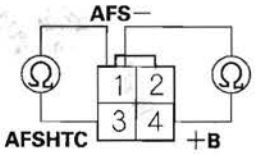

Wire side of female terminals

Is there continuity?

YES—Go to step 24.

NO—Go to step 11.

11. Jump the SCS line with the HDS.
12. Disconnect PCM connector C (44P).
13. Connect A/F sensor (Sensor 1) 4P connector terminal No. 3 to body ground with a jumper wire.

A/F SENSOR (SENSOR 1) 4P CONNECTOR

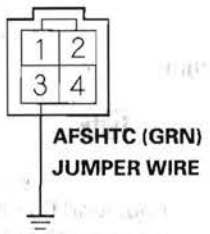

Terminal side of male terminals

14. Check for continuity between PCM connector terminal C9 and body ground.

PCM CONNECTOR C (44P)

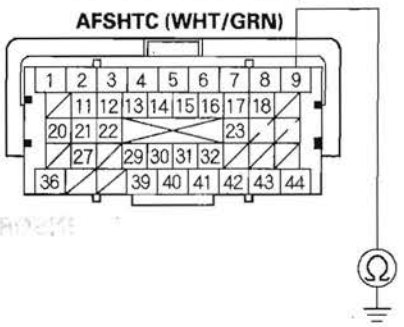

Terminal side of female terminals

Is there continuity?

YES—Go to step 15.

NO—Repair open in the wire between the PCM (C9) and the A/F sensor (Sensor 1), then go to step 25.

15. Remove the A/F sensor relay (LAF) (E) from the under-hood fuse/relay box.

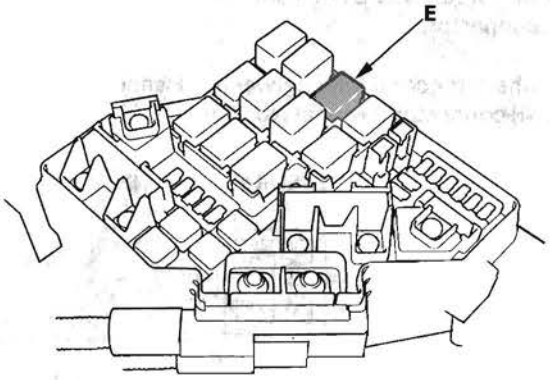

16. Connect A/F sensor (Sensor 1) 4P connector terminal No. 4 to body ground with a jumper wire.

A/F SENSOR (SENSOR 1) 4P CONNECTOR

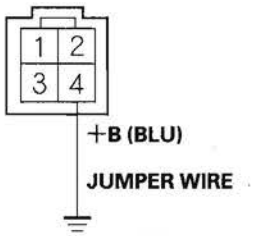

Terminal side of male terminals

17. Check for continuity between A/F sensor relay (LAF) 4P connector terminal No. 2 and body ground.

A/F SENSOR RELAY (LAF) 4P CONNECTOR

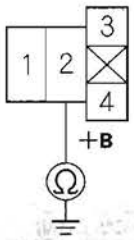

Terminal side of female terminals

Is there continuity?

YES—Go to step 18.

NO—Repair open in the wire between the A/F sensor (Sensor 1) and the A/F sensor relay (LAF), then go to step 25.

(cont'd)

DTC Troubleshooting (cont'd)

18. Disconnect PCM connector A (44P).

19. Check for continuity between A/F sensor relay (LAF) 4P connector terminal No. 3 and PCM connector terminal A21.

A/F SESOR RELAY (LAF) 4P CONNECTOR

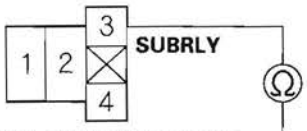

Terminal side of female terminals

SUBRLY (LT BLU) **PCM CONNECTOR A (44P)**

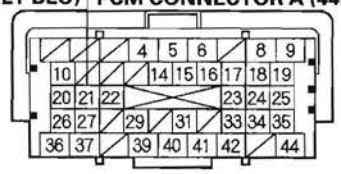

Terminal side of female terminals

Is there continuity?

YES—Go to step 31.

NO—Repair open in the wire between the PCM (A21) and the A/F sensor relay (LAF), then go to step 25.

20. Remove the A/F sensor relay (LAF) (E) from the under-hood fuse/relay box.

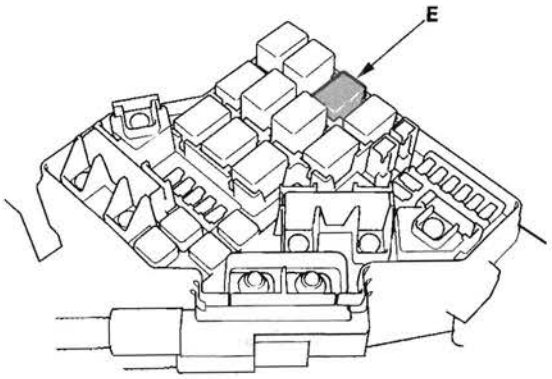

21. Disconnect the A/F sensor (Sensor 1) 4P connector.

22. Disconnect the EVAP canister vent shut valve 2P connector.

23. Check for continuity between A/F sensor (Sensor 1) 4P connector terminal No. 4 and body ground.

A/F SENSOR (SENSOR 1) 4P CONNECTOR

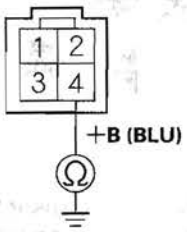

Terminal side of male terminals

Is there continuity?

YES—Repair short in the wire between the A/F sensor relay (LAF), the EVAP canister vent shut valve, and the A/F sensor (Sensor 1). Also replace the No. 11 +B LAF (A/F SENSOR) (15 A) fuse, then go to step 25.

NO—Replace the under-hood fuse/relay box (see page 22-63), then go to step 25.

24. Replace the A/F sensor (Sensor 1) (see page 11-214).

25. Reconnect all connectors.

26. Turn the ignition switch ON (II).

27. Reset the PCM with the HDS.

28. Do the PCM idle learn procedure (see page 11-304).

29. Check for Temporary DTCs or DTCs with the HDS.

    Is DTC P0135 indicated?

    YES—Check for poor connections or loose terminals at the A/F sensor (Sensor 1), the A/F sensor relay (LAF), and the PCM, then go to step 1.

    NO—Go to step 30.

30. Monitor the OBD STATUS for DTC P0135 in the DTCs MENU with the HDS.

    Does the screen indicate PASSED?

    YES—Troubleshooting is complete. If any other Temporary DTCs or DTCs were indicated in step 29, go to the indicated DTC's troubleshooting. ■

    NO—If the screen indicates FAILED, check for poor connections or loose terminals at the A/F sensor (Sensor 1), the A/F sensor relay (LAF), and the PCM, then go to step 1. If the screen indicates NOT COMPLETED, go to step 28.

31. Reconnect all connectors.

32. Update the PCM if it does not have the latest software (see page 11-7), or substitute a known-good PCM (see page 11-8).

33. Start the engine.

34. Check for Temporary DTCs or DTCs with the HDS.

    Is DTC P0135 indicated?

    YES—Check for poor connections or loose terminals at the A/F sensor (Sensor 1), the A/F sensor relay (LAF), and the PCM. If the PCM was updated, substitute a known-good PCM (see page 11-8), then go to step 33. If the PCM was substituted, go to step 1.

    NO—Go to step 35.

35. Monitor the OBD STATUS for DTC P0135 in the DTCs MENU with the HDS.

    Does the screen indicate PASSED?

    YES—If the PCM was updated, troubleshooting is complete. If the PCM was substituted, replace the original PCM (see page 11-219). If any other Temporary DTCs or DTCs were indicated in step 34, go to the indicated DTC's troubleshooting. ■

    NO—If the screen indicates FAILED, check for poor connections or loose terminals at the A/F sensor (Sensor 1), the A/F sensor relay (LAF), and the PCM. If the PCM was updated, substitute a known-good PCM (see page 11-8), then go to step 34. If the PCM was substituted, go to step 1. If the screen indicates NOT COMPLETED, keep idling until a result comes on.

DTC Troubleshooting (cont'd)

DTC P0137: Secondary HO2S (Sensor 2) Circuit Low Voltage

NOTE: Before you troubleshoot, record all freeze data and any on-board snapshot, and review the general troubleshooting information (see page 11-3).

1. Turn the ignition switch ON (II).
2. Clear the DTC with the HDS.
3. Start the engine. Hold the engine speed at 3,000 rpm without load (in Park or neutral) until the radiator fan comes on, then let it idle.
4. Check the HO2S S2 in the DATA LIST with the HDS.

   Does the voltage stay at 0.29 V or less?

   YES—Go to step 5.

   NO—Intermittent failure, the system is OK at this time. Check for poor connections or loose terminals at the secondary HO2S (Sensor 2) and the PCM. ■
5. Turn the ignition switch OFF.
6. Disconnect the secondary HO2S (Sensor 2) 6P connector.
7. Turn the ignition switch ON (II).
8. Check the HO2S S2 in the DATA LIST with the HDS.

   Does the voltage stay at 0.29 V or less?

   YES—Go to step 9.

   NO—Go to step 13.
9. Turn the ignition switch OFF.
10. Jump the SCS line with the HDS.
11. Disconnect PCM connector C (44P).
12. Check for continuity between secondary HO2S (Sensor 2) 6P connector terminal No. 2 and body ground.

SECONDARY HO2S (SENSOR 2) 6P CONNECTOR

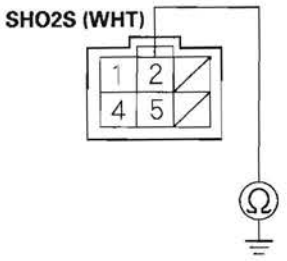

Terminal side of male terminals

Is there continuity?

YES—Repair short in the wire between the PCM (C27) and the secondary HO2S (Sensor 2), then go to step 15.

NO—Go to step 23.

13. Turn the ignition switch OFF.
14. Replace the secondary HO2S (Sensor 2) (see page 11-214).
15. Reconnect all connectors.
16. Turn the ignition switch ON (II).
17. Reset the PCM with the HDS.
18. Do the PCM idle learn procedure (see page 11-304).
19. Start the engine. Hold the engine speed at 3,000 rpm without load (in Park or neutral) until the radiator fan comes on, then let it idle.

20. Test-drive under these conditions:

    - Engine coolant temperature (ECT SENSOR 1) above 176 °F (80 °C)
    - Transmission in D position
    - Engine speed between 1,500—3,000 rpm
    - Drive about 1 minute or more

21. Check for Temporary DTCs or DTCs with the HDS.

    Is DTC P0137 indicated?

    YES—Check for poor connections or loose terminals at the secondary HO2S (Sensor 2) and the PCM, then go to step 1.

    NO—Go to step 22.

22. Monitor the OBD STATUS for DTC P0137 in the DTCs MENU with the HDS.

    Does the screen indicate PASSED?

    YES—Troubleshooting is complete. If any other Temporary DTCs or DTCs were indicated in step 21, go to the indicated DTC's troubleshooting. ■

    NO—If the screen indicates FAILED, check for poor connections or loose terminals at the secondary HO2S (Sensor 2) and the PCM, then go to step 1. If the screen indicates EXECUTING, keep driving until a result comes on. If the screen indicates OUT OF CONDITION, go to step 19.

23. Reconnect all connectors.

24. Update the PCM if it does not have the latest software (see page 11-7), or substitute a known-good PCM (see page 11-8).

25. Start the engine, Hold the engine speed at 3,000 rpm without load (in Park or neutral) until the radiator fan comes on, then let it idle.

26. Test-drive under these conditions:

    - Engine coolant temperature (ECT SENSOR 1) above 176 °F (80 °C)
    - Engine speed between 1,500—3,000 rpm
    - Drive 1 minute or more

27. Check for Temporary DTCs or DTCs with the HDS.

    Is DTC P0137 indicated?

    YES—Check for poor connections or loose terminals at the secondary HO2S (Sensor 2) and the PCM. If the PCM was updated, substitute a known-good PCM (see page 11-8), then go to step 25. If the PCM was substituted, go to step 1.

    NO—Go to step 28.

28. Monitor the OBD STATUS for DTC P0137 in the DTCs MENU with the HDS.

    Does the screen indicate PASSED?

    YES—If the PCM was updated, troubleshooting is complete. If the PCM was substituted, replace the original PCM (see page 11-219). If any other Temporary DTCs or DTCs were indicated in step 26, go to the indicated DTC's troubleshooting. ■

    NO—If the screen indicates FAILED, check for poor connections or loose terminals at the secondary HO2S (Sensor 2) and the PCM. If the PCM was updated, substitute a known-good PCM (see page 11-8), then go to step 25. If the PCM was substituted, go to step 1. If the screen indicates EXECUTING, keep driving until a result comes on. If the screen indicates OUT OF CONDITION, go to step 25.

DTC Troubleshooting (cont'd)

DTC P0138: Secondary HO2S (Sensor 2) Circuit High Voltage

NOTE: Before you troubleshoot, record all freeze data and any on-board snapshot, and review the general troubleshooting information (see page 11-3).

1. Turn the ignition switch ON (II).
2. Clear the DTC with the HDS.
3. Start the engine. Hold the engine speed at 3,000 rpm without load (in Park or neutral) until the radiator fan comes on, then let it idle.
4. Check the HO2S S2 in the DATA LIST with the HDS.

   Does the voltage stay at 1.25 V or more?

   YES—Go to step 5.

   NO—Intermittent failure, the system is OK at this time. Check for poor connections or loose terminals at the secondary HO2S (Sensor 2) and the PCM. ■
5. Turn the ignition switch OFF.
6. Disconnect the secondary HO2S (Sensor 2) 6P connector.
7. Connect secondary HO2S (Sensor 2) 6P connector terminals No. 1 and No. 2 with a jumper wire.

SECONDARY HO2S (SENSOR 2) 6P CONNECTOR

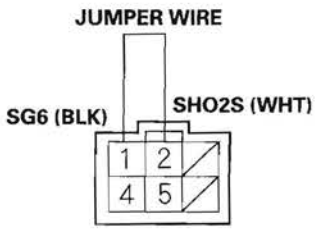

Terminal side of male terminals

8. Turn the ignition switch ON (II).
9. Check the HO2S S2 in the DATA LIST with the HDS.

   Does the voltage stay at 1.25 V or more?

   YES—Go to step 10.

   NO—Go to step 19.
10. Turn the ignition switch OFF.
11. Remove the jumper wire from the secondary HO2S (Sensor 2) 6P connector.
12. Connect secondary HO2S (Sensor 2) 6P connector terminal No. 2 to body ground with a jumper wire.

SECONDARY HO2S (SENSOR 2) 6P CONNECTOR

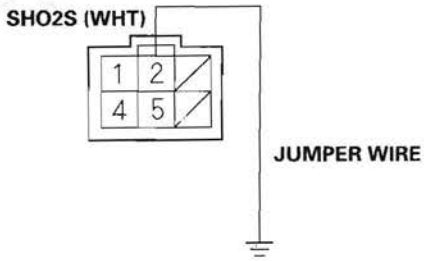

Terminal side of male terminals

13. Turn the ignition switch ON (II).
14. Check the HO2S S2 in the DATA LIST with the HDS.

    Does the voltage stay at 1.25 V or more?

    YES—Go to step 15.

    NO—Repair open in the wire between the PCM (B33) and the secondary HO2S (Sensor 2), then go to step 21.

15. Turn the ignition switch OFF.

16. Jump the SCS line with the HDS.

17. Disconnect PCM connector C (44P).

18. Check for continuity between PCM connector terminal C27 and body ground.

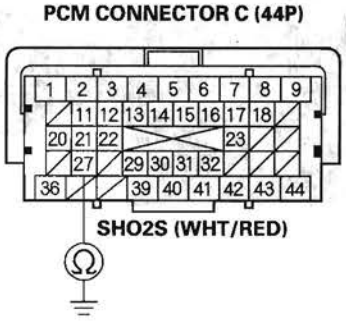

Terminal side of female terminals

Is there continuity?

YES—Go to step 29.

NO—Repair open in the wire between the PCM (C27) and the secondary HO2S (Sensor 2), then go to step 21.

19. Turn the ignition switch OFF.

20. Replace the secondary HO2S (Sensor 2) (see page 11-214).

21. Reconnect all connectors.

22. Turn the ignition switch ON (II).

23. Reset the PCM with the HDS.

24. Do the PCM idle learn procedure (see page 11-304).

25. Start the engine. Hold the engine speed at 3,000 rpm without load (in Park or neutral) until the radiator fan comes on, then let it idle.

26. Test-drive under these conditions:

- Engine coolant temperature (ECT SENSOR 1) above 176 °F (80 °C)
- Transmission in D position
- Engine speed between 1,500—3,000 rpm
- Drive about 1 minute or more

27. Check for Temporary DTCs or DTCs with the HDS.

Is DTC P0138 indicated?

YES—Check for poor connections or loose terminals at the secondary HO2S (Sensor 2) and the PCM, then go step 1.

NO—Go to step 28.

28. Monitor the OBD STATUS for DTC P0138 in the DTCs MENU with the HDS.

Does the screen indicate PASSED?

YES—Troubleshooting is complete. If any other Temporary DTCs or DTCs were indicated in step 27, go to the indicated DTC's troubleshooting.■

NO—If the screen indicates FAILED, check for poor connections or loose terminals at the secondary HO2S (Sensor 2) and the PCM, then go to step 1. If the screen indicates EXECUTING, keep driving until a result comes on. If the screen indicates OUT OF CONDITION, go to step 25.

(cont'd)

DTC Troubleshooting (cont'd)

29. Reconnect all connectors.

30. Update the PCM if it does not have the latest software (see page 11-7), or substitute a known-good PCM (see page 11-8).

31. Start the engine. Hold the engine speed at 3,000 rpm without load (in Park or neutral) until the radiator fan comes on, then let it idle.

32. Test-drive under these conditions:

    - Engine coolant temperature (ECT SENSOR 1) above 176 °F (80 °C)
    - Transmission in D position
    - Engine speed between 1,500—3,000 rpm
    - Drive about 1 minute or more

33. Check for Temporary DTCs or DTCs with the HDS.

    Is DTC P0138 indicated?

    YES—Check for poor connections or loose terminals at the secondary HO2S (Sensor 2) and the PCM. If the PCM was updated, substitute a known-good PCM (see page 11-8), then go to step 31. If the PCM was substituted, go to step 1.

    NO—Go to step 34.

34. Monitor the OBD STATUS for DTC P0138 in the DTCs MENU with the HDS.

    Does the screen indicate PASSED?

    YES—If the PCM was updated, troubleshooting is complete. If the PCM was substituted, replace the original PCM (see page 11-219). If any other Temporary DTCs or DTCs were indicated in step 33, go to the indicated DTC's troubleshooting. ■

    NO—If the screen indicates FAILED, check for poor connections or loose terminals at the secondary HO2S (Sensor 2) and the PCM. If the PCM was updated, substitute a known-good PCM (see page 11-8), then go to step 31. If the PCM was substituted, go to step 1. If the screen indicates EXECUTING, keep driving until a result comes on. If the screen indicates OUT OF CONDITION, go to step 31.

DTC P0139: Secondary HO2S (Sensor 2) Slow Response

NOTE: Before you troubleshoot, record all freeze data and any on-board snapshot, and review the general troubleshooting information (see page 11-3).

1. Turn the ignition switch ON (II).
2. Clear the DTC with the HDS.
3. Start the engine. Hold the engine speed at 3,000 rpm without load (in Park or neutral) until the radiator fan comes on, then let it idle.
4. Test-drive under these conditions:
   - Engine coolant temperature (ECT SENSOR 1) above 176 °F (80 °C)
   - Transmission in D position
   - Vehicle speed between 35—55 mph (56—88 km/h)
   - Drive 5 minutes or more
5. Monitor the OBD STATUS for DTC P0139 in the DTCs MENU with the HDS.

   Does the screen indicate FAILED?

   YES—Go to step 6.

   NO—If the screen indicates PASSED, intermittent failure, the system is OK at this time. Check for poor connections or loose terminals at the secondary HO2S (Sensor 2) and the PCM. If the screen indicates EXECUTING, keep driving until a result comes on. If the screen indicates OUT OF CONDITION, go to step 3 and recheck.
6. Turn the ignition switch OFF.
7. Replace the secondary HO2S (Sensor 2) (see page 11-214).
8. Turn the ignition switch ON (II).
9. Reset the PCM with the HDS.
10. Do the PCM idle learn procedure (see page 11-304).
11. Start the engine. Hold the engine speed at 3,000 rpm without load (in Park or neutral) until the radiator fan comes on, then let it idle.
12. Test-drive under these conditions:
    - Engine coolant temperature (ECT SENSOR 1) above 176 °F (80 °C)
    - Transmission in D position
    - Vehicle speed between 35—55 mph (56—88 km/h)
    - Drive 5 minutes or more
13. Check for Temporary DTCs or DTCs with the HDS.

    Is DTC P0139 indicated?

    YES—Check for poor connections or loose terminals at the secondary HO2S (Sensor 2) and the PCM, then go to step 1.

    NO—Go to step 14.
14. Monitor the OBD STATUS for DTC P0139 in the DTCs MENU with the HDS.

    Does the screen indicate PASSED?

    YES—Troubleshooting is complete. If any other Temporary DTCs or DTCs were indicated in step 13, go to the indicated DTC's troubleshooting. ■

    NO—If the screen indicates FAILED, check for poor connections or loose terminals at the secondary HO2S (Sensor 2) and the PCM, then go to step 1. If the screen indicates EXECUTING, keep driving until a result comes on. If the screen indicates OUT OF CONDITION, go to step 11.

DTC Troubleshooting (cont'd)

DTC P0141: Secondary HO2S (Sensor 2) Heater Circuit Malfunction

NOTE: Before you troubleshoot, record all freeze data and any on-board snapshot, and review the general troubleshooting information (see page 11-3).

1. Turn the ignition switch ON (II).
2. Clear the DTC with the HDS.
3. Start the engine.
4. Check for Temporary DTCs or DTCs with the HDS.

   Is DTC P0141 indicated?

   YES—Go to step 5.

   NO—Intermittent failure, the system is OK at this time. Check for poor connections or loose terminals at the secondary HO2S (Sensor 2) and the PCM. ■
5. Turn the ignition switch OFF.
6. Check the No. 3 ALTERNATOR (10 A) fuse in the under-dash fuse/relay box.

   Is the fuse OK?

   YES—Go to step 7.

   NO—Repair short in the wire between the secondary HO2S (Sensor 2) and the No. 3 ALTERNATOR (10 A) fuse. Also replace the No. 3 ALTERNATOR (10 A) fuse, then go to step 23.
7. Disconnect the secondary HO2S (Sensor 2) 6P connector.
8. At the secondary HO2S (Sensor 2) side, measure resistance between secondary HO2S (Sensor 2) 6P connector terminals No. 4 and No. 5.

   SECONDARY HO2S (SENSOR 2) 6P CONNECTOR

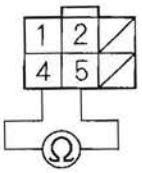

   Wire side of female terminals

   Is there 5.4—6.6 Ω at room temperature?

   YES—Go to step 9.

   NO—Go to step 22.
9. At the secondary HO2S (Sensor 2) side, check for continuity between body ground and secondary HO2S (Sensor 2) 6P connector terminals No. 4 and No. 5 individually.

   SECONDARY HO2S (SENSOR 2) 6P CONNECTOR

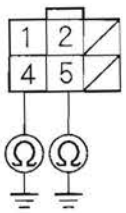

   Wire side of female terminals

   Is there continuity?

   YES—Go to step 22.

   NO—Go to step 10.

10. Turn the ignition switch ON (II).

11. Measure voltage between secondary HO2S (Sensor 2) 6P connector terminals No. 4 and No. 5.

SECONDARY HO2S (SENSOR 2) 6P CONNECTOR

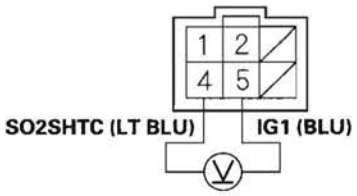

Terminal side of male terminals

Is there battery voltage?

YES—Go to step 12.

NO—Go to step 16.

12. Turn the ignition switch OFF.

13. Jump the SCS line with the HDS.

14. Disconnect PCM connector B (44P).

15. Check for continuity between PCM connector terminal B4 and body ground.

PCM CONNECTOR B (44P)

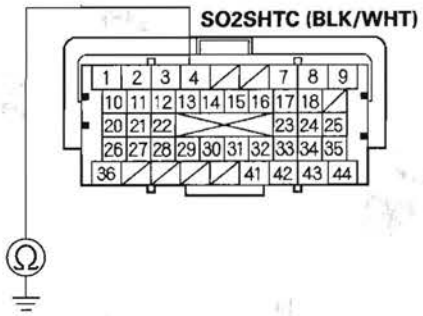

Terminal side of female terminals

Is there continuity?

YES—Repair short in the wire between the PCM (B4) and the secondary HO2S (Sensor 2), then go to step 23.

NO—Go to step 29.

16. Measure voltage between secondary HO2S (Sensor 2) 6P connector terminal No. 5 and body ground.

SECONDARY HO2S (SENSOR 2) 6P CONNECTOR

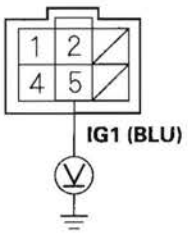

Terminal side of male terminals

Is there battery voltage?

YES—Go to step 17.

NO—Repair open in the wire between the secondary HO2S (Sensor 2) and the No. 3 ALTERNATOR (10 A) fuse, then go to step 23.

(cont'd)

DTC Troubleshooting (cont'd)

17. Turn the ignition switch OFF.
18. Jump the SCS line with the HDS.
19. Disconnect PCM connector B (44P).
20. Connect secondary HO2S (Sensor 2) 6P connector terminal No. 4 to body ground with a jumper wire.

SECONDARY HO2S (SENSOR 2) 6P CONNECTOR

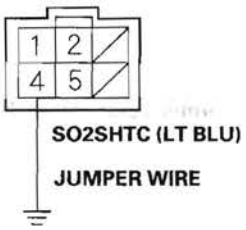

Terminal side of male terminals

21. Check for continuity between PCM connector terminal B4 and body ground.

PCM CONNECTOR B (44P)

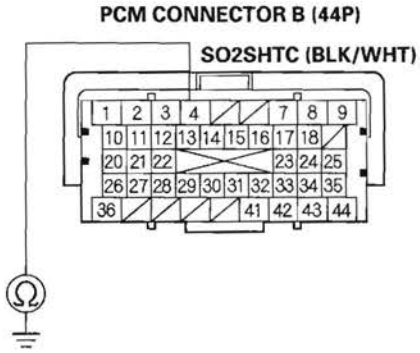

Terminal side of female terminals

Is there continuity?

YES—Go to step 29.

NO—Repair open in the wire between the PCM (B4) and the secondary HO2S (Sensor 2), then go to step 23.

22. Replace the secondary HO2S (Sensor 2) (see page 11-214).
23. Reconnect all connectors.
24. Turn the ignition switch ON (II).
25. Reset the PCM with the HDS.
26. Do the PCM idle learn procedure (see page 11-304).
27. Check for Temporary DTCs or DTCs with the HDS.

Is DTC P0141 indicated?

YES—Check for poor connections or loose terminals at the secondary HO2S (Sensor 2) and the PCM, then go to step 1.

NO—Go to step 28.

28. Monitor the OBD STATUS for DTC P0141 in the DTCs MENU with the HDS.

Does the screen indicate PASSED?

YES—Troubleshooting is complete. If any other Temporary DTCs or DTCs were indicated in step 27, go to the indicated DTC's troubleshooting. ■

NO—If the screen indicates FAILED, check for poor connections or loose terminals at the secondary HO2S (Sensor 2) and the PCM, then go to step 1. If the screen indicates NOT COMPLETED, go to step 26.

29. Reconnect all connectors.

30. Update the PCM if it does not have the latest software (see page 11-7), or substitute a known-good PCM (see page 11-8).

31. Start the engine.

32. Check for Temporary DTCs or DTCs with the HDS.

    Is DTC P0141 indicated?

    YES—Check for poor connections or loose terminals at the secondary HO2S (Sensor 2) and the PCM. If the PCM was updated, substitute a known-good PCM (see page 11-8), then go to step 31. If the PCM was substituted, go to step 1.

    NO—Go to step 33.

33. Monitor the OBD STATUS for DTC P0141 in the DTCs MENU with the HDS.

    Does the screen indicate PASSED?

    YES—If the PCM was updated, troubleshooting is complete. If the PCM was substituted, replace the original PCM (see page 11-219). If any other Temporary DTCs or DTCs were indicated in step 32, go to the indicated DTC's troubleshooting. ■

    NO—If the screen indicates FAILED, check for poor connections or loose terminals at the secondary HO2S (Sensor 2) and the PCM. If the PCM was updated, substitute a known-good PCM (see page 11-8), then go to step 31. If the PCM was substituted, go to step 1. If the screen indicates NOT COMPLETED, keep idling until a result comes on.

DTC Troubleshooting (cont'd)

DTC P0171: Fuel System Too Lean

DTC P0172: Fuel System Too Rich

NOTE:
- Before you troubleshoot, record all freeze data and any on-board snapshot, and review the general troubleshooting information (see page 11-3).
- If any of the DTCs listed below are indicated at the same time as DTC P0171 and/or P0172, troubleshoot those DTCs first, then recheck for P0171 and/or P0172.

P0101, P0102, P0103: Mass air flow (MAF) sensor
P0107, P0108, P1128, P1129: Manifold absolute pressure (MAP) sensor
P0133, P1172, P1157, P2195, P2238, P2252, P2A00: Air fuel ratio (A/F) sensor (Sensor 1)
P0134, P0135: Air fuel ratio (A/F) sensor (Sensor 1) heater
P0137, P0138, P0139, P2270, P2271: Secondary HO2S (Sensor 2)
P0141: Secondary HO2S (Sensor 2) heater
P2646, P2647, P2648, P2649: VTEC system
P0401, P0404, P0406, P2413: Exhaust gas recirculation (EGR) system
P0443, P0496: EVAP canister purge valve

1. Check the fuel pressure (see page 11-319).

   Is the fuel pressure OK?

   YES—Go to step 2.

   NO—
   - If the pressure is too high, replace the fuel pressure regulator (see page 11-331), then go to step 7.
   - If the pressure is too low, check the fuel pump, the fuel feed pipe and the fuel filter. If they are OK, replace the fuel pressure regulator (see page 11-331), then go to step 7.

2. Check for vacuum leaks at these parts:

   - PCV valve
   - PCV hose
   - EVAP canister purge valve
   - Throttle body
   - Intake manifold
   - Brake booster
   - Brake booster hose
   - Air Intake duct

   Are the parts OK?

   YES—Go to step 3.

   NO—Repair or replace parts with leaks, then go to step 7.

3. Start the engine. Hold the engine speed at 3,000 rpm without load (in Park or neutral) until the radiator fan comes on, then let it idle.

4. Check for these conditions:

   - Engine coolant temperature (ECT SENSOR 1) above 176 °F (80 °C)
   - Transmission in Park or neutral
   - All electrical loads off

5. Monitor the ENGINE SPEED in the DATA LIST with the HDS, and hold the engine speed at 4,500 rpm. Once the engine speed is met, hold the accelerator pedal steady for more than 10 seconds.

   Did the engine speed vary more than 100 rpm from 4,500 rpm?

   YES—Repeat step 5.

   NO—Go to step 6.

6. While holding the engine speed at 4,500 rpm, check the MAF SENSOR in the DATA LIST with the HDS.

   Is there about 14–20 gm/s?

   YES—Check the engine valve clearances and adjust if necessary (see page 6-9). If the valve clearances are OK, replace the injectors (see page 11-212), then go to step 7.

   NO—Replace the MAF sensor/IAT sensor (see page 11-216), then go to step 7.

7. Turn the ignition switch ON (II).

8. Reset the PCM with the HDS.

9. Do the PCM idle learn procedure (see page 11-304).

10. Start the engine. Hold the engine speed at 3,000 rpm without load (in Park or neutral) until the radiator fan comes on, then let it idle.

11. Test-drive under these conditions:

    - Engine coolant temperature (ECT SENSOR 1) above 176 °F (80 °C)
    - Transmission in Park or neutral
    - All electrical loads off

    NOTE: DTC P0171 and/or P0172 may take up to 80 minutes of test driving to set. Using the HDS, monitor the long term fuel trim (LT FUEL TRIM) or the air fuel feed back average (AF FB AVE). If the long term fuel trim/air fuel feed back average stays within 0.80—1.25, there is no problem at this time.

12. Check for Temporary DTCs or DTCs with the HDS.

    Is DTC P0171 or P0172 indicated?

    YES—Go to step 1 and recheck.

    NO—Troubleshooting is complete. If any other Temporary DTCs or DTCs are indicated, go to the indicated DTC's troubleshooting. ■

DTC Troubleshooting (cont'd)

DTC P0300: Random Misfire and Any Combination of the Following:

DTC P0301: No. 1 Cylinder Misfire Detected

DTC P0302: No. 2 Cylinder Misfire Detected

DTC P0303: No. 3 Cylinder Misfire Detected

DTC P0304: No. 4 Cylinder Misfire Detected

Special Tools Required
- Pressure gauge adapter 07NAJ-P07010A
- A/T low pressure gauge w/panel 07406-0070301
- A/T pressure hose 07406-0020201
- A/T pressure hose, 2,210 mm 07MAJ-PY4011A
- A/T pressure adapter 07MAJ-PY40120
- Oil pressure hose 07ZAJ-S5AA200

NOTE:
- Before you troubleshoot, record all freeze data and any on-board snapshot, and review the general troubleshooting information (see page 11-3).
- If the misfire is frequent enough to trigger detection of increased emissions during two consecutive driving cycles, the MIL will come on, and DTC P0300 (and some of the combination of P0301 through P0304) will be stored.
- If the misfire is frequent enough to damage the catalyst, the MIL will flash whenever the misfire occurs, and DTC P0300 (and some of the combination of P0301 through P0304) will be stored. When the misfire stops, the MIL will remain on.
- If any of the DTCs listed below are indicated at the same time as the random misfire DTCs, troubleshoot those DTCs first, then recheck for random misfire DTCs:

  P0101, P0102, P0103: Mass air flow (MAF) sensor
  P0107, P0108: Manifold absolute pressure (MAP) sensor
  P0171, P0172: Fuel system
  P0335, P0339: Crankshaft position (CKP) sensor
  P0365, P0369: Camshaft position (CMP) sensor B
  P0506, P507: Idle control system
  P2646, P2647, P2648, P2649: VTEC system
  P0401, P0404, P0416, P2413: Exhaust gas recirculation (EGR) system

1. Turn the ignition switch ON (II).
2. Clear the DTC with the HDS.
3. Start the engine, and let it idle without load (in Park or neutral).
4. Monitor the OBD STATUS for DTC P0301, P0302, P0303, or P0304 in the DTCs MENU with the HDS.

   Does the screen indicate FAILED?

   YES—Go to step 9.

   NO—If the screen indicates PASSED, go to step 5. If the screen indicates EXECUTING, let the engine idle until a result comes on. If the screen indicates OUT OF CONDITION, wait for several minutes, then recheck.
5. Check the CYL1 MISFIRE, CYL2 MISFIRE, CYL3 MISFIRE, and/or CYL4 MISFIRE in the DATA LIST for 10 minutes with the HDS.

   Does the CYL1 MISFIRE, CYL2 MISFIRE, CYL3 MISFIRE, and/or CYL4 MISFIRE show misfire counts?

   YES—Go to step 9.

   NO—Go to step 6.
6. Test-drive the vehicle for several minutes in the range of these recorded freeze data parameters:

   - ENGINE SPEED
   - VSS
   - REL TP SENSOR
   - CLV (calculated load value)
   - APP SENSOR
7. Monitor the OBD STATUS for DTC P0301, P0302, P0303, or P0304 in the DTCs MENU with the HDS.

   Does the screen indicate FAILED?

   YES—Go to step 9.

   NO—If the screen indicates PASSED, go to step 8. If the screen indicates EXECUTING, keep driving until a result comes on. if the screen indicates OUT OF CONDITION, go to step 6 and recheck.

8. Check the CYL1 MISFIRE, CYL2 MISFIRE, CYL3 MISFIRE, and/or CYL4 MISFIRE in the DATA LIST for 10 minutes with the HDS.

   Does the CYL1 MISFIRE, CYL2 MISFIRE, CYL3 MISFIRE, and/or CYL4 MISFIRE show misfire counts?

   YES—Go to step 9.

   NO—Intermittent failure, the system is OK at this time.■

9. Turn the ignition switch OFF.

10. Check the fuel quality.

    Is the quality good?

    YES—Go to step 11.

    NO—Drain the tank and fill with a known-good fuel, then go to step 24.

11. Inspect the spark plugs (see page 4-20). If the spark plugs are fouled or worn, replace them.

12. Test-drive the vehicle for several minutes in the range of these recorded freeze data parameters:

    - ENGINE SPEED
    - VSS
    - REL TP SENSOR
    - CLV (calculated load value)
    - APP SENSOR

13. Check the CYL1 MISFIRE, CYL2 MISFIRE, CYL3 MISFIRE, and/or CYL4 MISFIRE in the DATA LIST for 10 minutes with the HDS.

    Does the CYL1 MISFIRE, CYL2 MISFIRE, CYL3 MISFIRE, and/or CYL4 MISFIRE show misfire counts?

    YES—Go to step 14.

    NO—Go to step 24.

14. Check the fuel pressure (see page 11-319).

    Is the fuel pressure OK?

    YES—Go to step 15.

    NO—
    - If the fuel pressure is too high, replace the fuel pressure regulator (see page 11-331), then go to step 24.
    - If the fuel pressure is too low, check the fuel pump, the fuel feed pipe, and the fuel filter. If they are OK, replace the fuel pressure regulator (see page 11-331), then go to step 24.

15. Start the engine. Hold the engine speed at 3,000 rpm without load (in Park or neutral) until the radiator fan comes on, then let it idle.

16. Check for these conditions:

    - Engine coolant temperature (ECT SENSOR 1) above 176 °F (80 °C)
    - Transmission in Park or neutral
    - All electrical loads off

17. Monitor the ENGINE SPEED in the DATA LIST with the HDS, and hold the engine speed at 4,500 rpm. Once the engine speed is met, hold the accelerator pedal steady for more than 10 seconds.

    Did the engine speed vary more than 100 rpm from 4,500 rpm?

    YES—Repeat step 17.

    NO—Go to step 18.

18. While holding the engine speed at 4,500 rpm, check the MAF SENSOR in the DATA LIST with the HDS.

    Is there about 14–20 gm/s?

    YES—Go to step 19.

    NO—Replace the MAF sensor/IAT sensor (see page 11-216), then go to step 24.

(cont'd)

DTC Troubleshooting (cont'd)

19. Turn the ignition switch OFF.

20. Remove the rocker arm oil pressure switch (A), and install the special tools as shown, then install the rocker arm oil pressure switch in the pressure gauge attachment (B).

    NOTE: Install the parts in the reverse order of removal with a new O-ring.

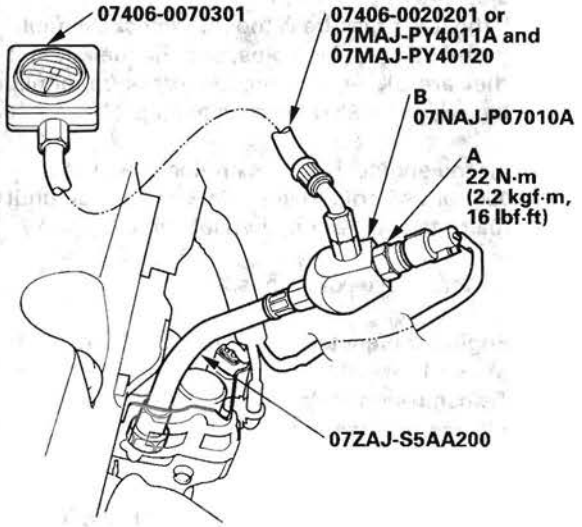

21. Reconnect the rocker arm oil pressure switch 2P connector.

22. Start the engine. Hold the engine speed at 3,000 rpm without load (in Park or neutral) until the radiator fan comes on, then let it idle.

23. Check the oil pressure at engine speeds of 1,000 rpm and 2,000 rpm.

    Is the oil pressure below 49 kPa (0.5 kgf/cm², 7 psi)?

    YES—Check for air in the fuel line, then go to step 24.

    NO—Inspect the VTEC system, then go to step 24.

24. Turn the ignition switch ON (II).

25. Reset the PCM with the HDS.

26. Clear the CKP pattern with the HDS.

27. Do the PCM idle learn procedure (see page 11-304).

28. Do the CKP pattern learn procedure (see page 11-4).

29. Test-drive the vehicle for several minutes in the range of these recorded freeze data parameters:

    - ENGINE SPEED
    - VSS
    - REL TP SENSOR
    - CLV (calculated load value)
    - APP SENSOR

30. Check for Temporary DTCs or DTCs with the HDS.

    Are DTC P0300, P0301, P0302, P0303, or P0304 indicated?

    YES—Check for a poor connection or loose terminals at the ignition coil, the injector, and the PCM, then go to troubleshooting DTC P0301, P0302, P0303, or P0304 (see page 11-111).■

    NO—Go to step 31.

31. Monitor the OBD STATUS for DTC P0301, P0302, P0303, or P0304 in the DTCs MENU with the HDS.

    Does the screen indicate PASSED?

    YES—Troubleshooting is complete. If any other Temporary DTCs or DTCs were indicated in step 30, go to the indicated DTC's troubleshooting.■

    NO—If the screen indicates FAILED, check for poor connections or loose terminals at the ignition coil, the injector, and the PCM, then go to step 1. If the screen indicates EXECUTING, keep driving until a result comes on. If the screen indicates OUT OF CONDITION, go to step 29.

DTC P0301: No. 1 Cylinder Misfire Detected

DTC P0302: No. 2 Cylinder Misfire Detected

DTC P0303: No. 3 Cylinder Misfire Detected

DTC P0304: No. 4 Cylinder Misfire Detected

NOTE: Before you troubleshoot, record all freeze data and any on-board snapshot, and review the general troubleshooting information (see page 11-3).

1. Turn the ignition switch ON (II).
2. Clear the DTC with the HDS.
3. Start the engine, and let it idle without load (in Park or neutral).
4. Monitor the OBD STATUS for DTC P0301, P0302, P0303, or P0304 in the DTCs MENU with the HDS.

   Does the screen indicate FAILED?

   YES—Go to step 9.

   NO—If the screen indicates PASSED, go to step 5. If the screen indicates EXECUTING, let the engine idle until a result comes on. If the screen indicates OUT OF CONDITION, wait for several minutes, and recheck.

5. Check the CYL1 MISFIRE, CYL2 MISFIRE, CYL3 MISFIRE, and/or CYL4 MISFIRE in the DATA LIST for 10 minutes with the HDS.

   Does the CYL1 MISFIRE, CYL2 MISFIRE, CYL3 MISFIRE, and/or CYL4 MISFIRE show misfire counts?

   YES—Go to step 9.

   NO—Go to step 6.

6. Test-drive the vehicle for several minutes in the range of these recorded freeze data parameters:

   - ENGINE SPEED
   - VSS
   - REL TP SENSOR
   - CLV (calculated load value)
   - APP SENSOR

7. Monitor the OBD STATUS for DTC P0301, P0302, P0303, or P0304 in the DTCs MENU with the HDS.

   Does the screen indicate FAILED?

   YES—Go to step 9.

   NO—If the screen indicates PASSED, go to step 8. If the screen indicates EXECUTING, keep driving until a result comes on. If the screen indicates OUT OF CONDITION, go to step 6 and recheck.

8. Check the CYL1 MISFIRE, CYL2 MISFIRE, CYL3 MISFIRE, and/or CYL4 MISFIRE in the DATA LIST for 10 minutes with the HDS.

   Does the CYL1 MISFIRE, CYL2 MISFIRE, CYL3 MISFIRE, and/or CYL4 MISFIRE show misfire counts?

   YES—Go to step 9.

   NO—Intermittent failure, the system is OK at this time. Check for loose wires or poor connections in the fuel system circuit. ■

9. Turn the ignition switch OFF.
10. Remove the intake manifold cover (see step 5 on page 9-3).
11. Start the engine, and listen for a clicking sound at the injector of the problem cylinder.

    Does the injector click?

    YES—Go to step 12.

    NO—Go to step 42.

(cont'd)

DTC Troubleshooting (cont'd)

12. Turn the ignition switch OFF.
13. Exchange the ignition coil from the problem cylinder with one from another cylinder.
14. Test-drive the vehicle for several minutes in the range of these recorded freeze data parameters:

    • ENGINE SPEED
    • VSS
    • REL TP SENSOR
    • CLV (calculated load value)
    • APP SENSOR

15. Check the CYL1 MISFIRE, CYL2 MISFIRE, CYL3 MISFIRE, and/or CYL4 MISFIRE in the DATA LIST for 10 minutes with the HDS.

    Does the CYL1 MISFIRE, CYL2 MISFIRE, CYL3 MISFIRE, and/or CYL4 MISFIRE show misfire counts?

    YES—Go to step 16.

    NO—Intermittent misfire due to poor contact at the ignition coil connector or poor quality fuel (no misfire at this time). Make sure the coil connections are secure.■

16. Determine which cylinder had the misfire.

    Does the misfire occur in the cylinder where the ignition coil was exchanged?

    YES—Replace the faulty ignition coil (see page 4-19), then go to step 60.

    NO—Go to step 17.

17. Turn the ignition switch OFF.
18. Exchange the spark plug from the problem cylinder with one from another cylinder.
19. Test-drive the vehicle for several minutes in the range of these recorded freeze data parameters:

    • ENGINE SPEED
    • VSS
    • REL TP SENSOR
    • CLV (calculated load value)
    • APP SENSOR

20. Check the CYL1 MISFIRE, CYL2 MISFIRE, CYL3 MISFIRE, and/or CYL4 MISFIRE in the DATA LIST for 10 minutes with the HDS.

    Does the CYL1 MISFIRE, CYL2 MISFIRE, CYL3 MISFIRE, and/or CYL4 MISFIRE show misfire counts?

    YES—Go to step 21.

    NO—Intermittent misfire due to spark plug fouling (no misfire at this time).■

21. Determine which cylinder had the misfire.

    Does the misfire occur in the cylinder where the spark plug was exchanged?

    YES—Replace the faulty spark plug, then go to step 60.

    NO—Go to step 22.

22. Turn the ignition switch OFF.
23. Exchange the injector from the problem cylinder with one from the another cylinder.
24. Start the engine, and let it idle for 2 minutes.
25. Test-drive the vehicle for several minutes in the range of these recorded freeze data parameters:

    • ENGINE SPEED
    • VSS
    • REL TP SENSOR
    • CLV (calculated load value)
    • APP SENSOR

26. Check the CYL1 MISFIRE, CYL2 MISFIRE, CYL3 MISFIRE, and/or CYL4 MISFIRE in the DATA LIST for 10 minutes with the HDS.

    Does the CYL1 MISFIRE, CYL2 MISFIRE, CYL3 MISFIRE, and/or CYL4 MISFIRE show misfire counts?

    YES—Go to step 27.

    NO—Intermittent misfire due to bad contact at the injector connector (no misfire at this time). Check for poor connections or loose terminals at the injector.■

27. Determine which cylinder had the misfire.

Does the misfire occur in the cylinder where the injector was exchanged?

YES—Replace the faulty injector (see page 11-212), then go to step 60.

NO—Go to step 28.

28. Turn the ignition switch OFF.

29. Disconnect the ignition coil 3P connector from the problem cylinder.

30. Turn the ignition switch ON (II).

31. Measure voltage between ignition coil 3P connector terminal No. 3 and body ground.

IGNITION COIL 3P CONNECTOR

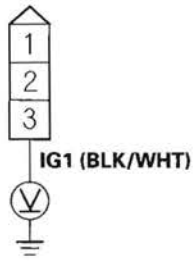

Wire side of female terminals

Is there battery voltage?

YES—Go to step 32.

NO—Repair open in the wire between the ignition coil and the ignition coil relay, then go to step 60.

32. Turn the ignition switch OFF.

33. Check for continuity between ignition coil 3P connector terminal No. 2 and body ground.

IGNITION COIL 3P CONNECTOR

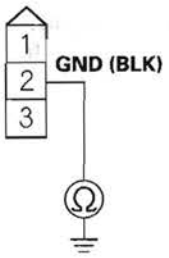

Wire side of female terminals

Is there continuity?

YES—Go to step 34.

NO—Repair open in the wire between the ignition coil and G101 (see page 22-16), then go to step 60.

(cont'd)

DTC Troubleshooting (cont'd)

34. Turn the ignition switch OFF.

35. Jump the SCS line with the HDS.

36. Disconnect PCM connector C (44P).

37. Check for continuity between body ground and the appropriate PCM connector terminal of the problem cylinder (see table).

PROBLEM CYLINDER	DTC	PCM TERMINAL	WIRE COLOR
No. 1	P0301	C15	YEL/GRN
No. 2	P0302	C16	BLU/RED
No. 3	P0303	C17	WHT/BLU
No. 4	P0304	C18	BRN

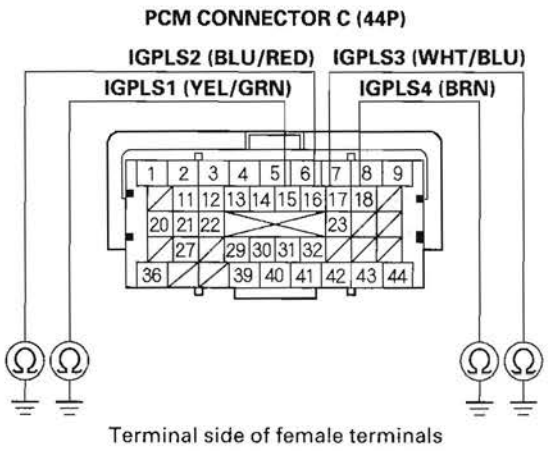

Terminal side of female terminals

Is there continuity?

YES—Repair short in the wire between the PCM and the ignition coil, then go to step 60.

NO—Go to step 38.

38. Check for continuity between appropriate ignition coil 3P connector terminal No. 1 and the appropriate PCM connector terminal of the problem cylinder (see table).

PROBLEM CYLINDER	DTC	PCM TERMINAL	WIRE COLOR
No. 1	P0301	C15	YEL/GRN
No. 2	P0302	C16	BLU/RED
No. 3	P0303	C17	WHT/BLU
No. 4	P0304	C18	BRN

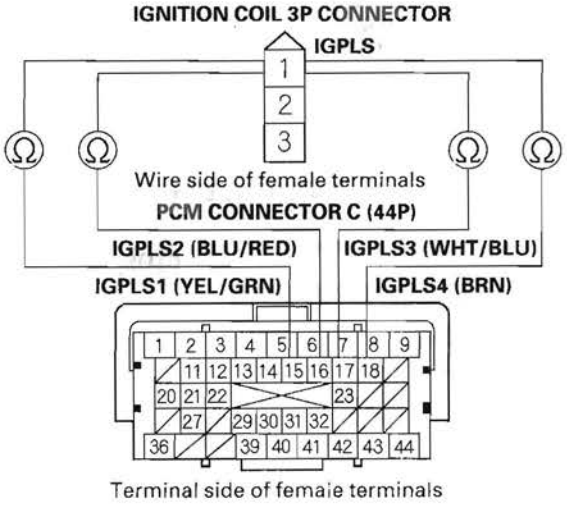

Terminal side of female terminals

Is there continuity?

YES—Go to step 39.

NO—Repair open in the wire between the PCM and the ignition coil, then go to step 60.

39. Reconnect all connectors.

40. Do an engine compression and a cylinder leakdown test (see page 6-6).

    Did the engine pass both tests?

    YES—Go to step 41.

    NO—Repair the engine, then go to step 60.

41. Do the VTEC rocker arm test (see page 6-7).

    Did the engine pass the test?

    YES—Go to step 70.

    NO—Repair the VTEC rocker arm (see page 6-38), then go to step 60.

42. Turn the ignition switch OFF.

43. Jump the SCS line with the HDS.

44. Disconnect PCM connector C (44P).

45. Turn the ignition switch ON (II).

46. Measure voltage between body ground and the appropriate PCM connector terminal of the problem cylinder (see table).

PROBLEM CYLINDER	DTC	PCM TERMINAL	WIRE COLOR
No. 1	P0301	C5	BRN
No. 2	P0302	C6	RED
No. 3	P0303	C7	BLU
No. 4	P0304	C8	YEL

PCM CONNECTOR C (44P)

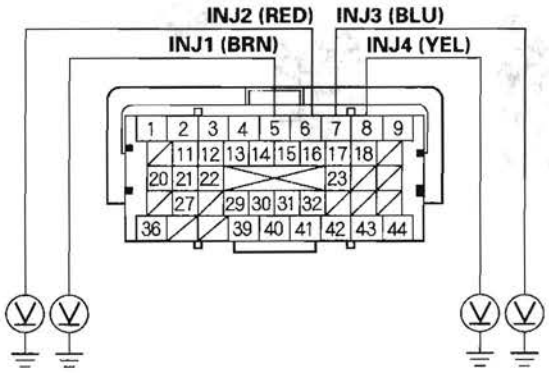

Terminal side of female terminals

Is there battery voltage?

YES—Go to step 54.

NO—Go to step 47.

(cont'd)

DTC Troubleshooting (cont'd)

47. Turn the ignition switch OFF.
48. Disconnect the injector 2P connector from the problem cylinder.
49. Turn the ignition switch ON (II).
50. Measure voltage between injector 2P connector terminal No. 1 and body ground.

INJECTOR 2P CONNECTOR

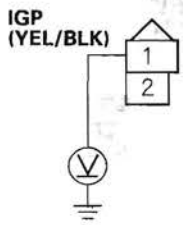

Wire side of female terminals

Is there battery voltage?

YES—Go to step 51.

NO—Repair open in the wire between the injector and PGM-FI main relay 1, then go to step 60.

51. Turn the ignition switch OFF.
52. Check for continuity between body ground and the appropriate PCM connector terminal of the problem cylinder (see table).

PROBLEM CYLINDER	DTC	PCM TERMINAL	WIRE COLOR
No. 1	P0301	C5	BRN
No. 2	P0302	C6	RED
No. 3	P0303	C7	BLU
No. 4	P0304	C8	YEL

PCM CONNECTOR C (44P)

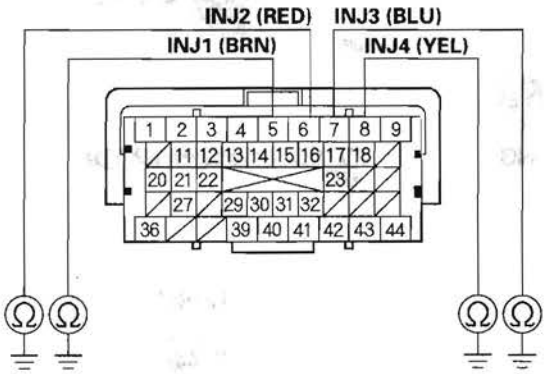

Terminal side of female terminals

Is there continuity?

YES—Repair short in the wire between the PCM and the injector, then go to step 60.

NO—Go to step 53.

53. Check for continuity between appropriate injector 2P connector terminal No. 2 and the appropriate PCM connector terminal of the problem cylinder (see table).

PROBLEM CYLINDER	DTC	PCM TERMINAL	WIRE COLOR
No. 1	P0301	C5	BRN
No. 2	P0302	C6	RED
No. 3	P0303	C7	BLU
No. 4	P0304	C8	YEL

INJECTOR 2P CONNECTOR

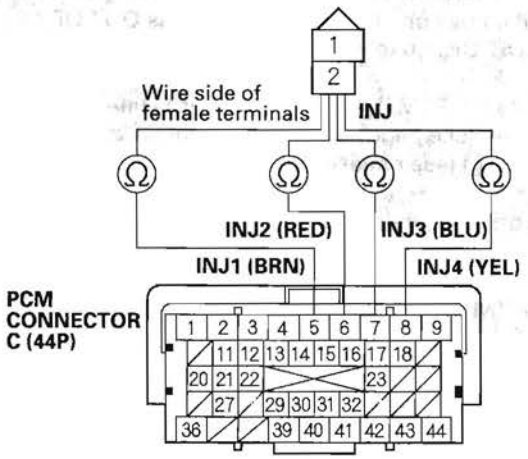

Terminal side of female terminals

Is there continuity?

YES—Go to step 54.

NO—Repair open in the wire between the PCM and the injector, then go to step 60.

54. At the injector side, measure resistance between injector 2P connector terminals No. 1 and No. 2.

INJECTOR 2P CONNECTOR

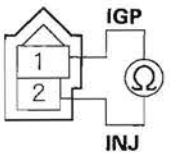

Terminal side of male terminals

Is there 10— 13 Ω ?

YES—Go to step 55.

NO—Replace the injector (see page 11-212), then go to step 60.

55. Substitute a known-good injector into the problem cylinder.

56. Reconnect all connectors.

57. Start the engine, and let it idle for 2 minutes.

58. Test-drive the vehicle for several minutes in the range of these recorded freeze data parameters:

- ENGINE SPEED
- VSS
- REL TP SENSOR
- CLV (calculated load value)
- APP SENSOR

(cont'd)

DTC Troubleshooting (cont'd)

59. Check the CYL1 MISFIRE, CYL2 MISFIRE, CYL3 MISFIRE, and/or CYL4 MISFIRE in the DATA LIST for 10 minutes with the HDS.

    Does the CYL1 MISFIRE, CYL2 MISFIRE, CYL3 MISFIRE, and/or CYL4 MISFIRE show misfire counts?

    YES—Go to step 70.

    NO—Replace the original injector (see page 11-212), then go to step 60.

60. Turn the ignition switch OFF.

61. Reconnect all connectors.

62. Turn the ignition switch ON (II).

63. Reset the PCM with the HDS.

64. Clear the CKP pattern with the HDS.

65. Do the PCM idle learn procedure (see page 11-304).

66. Do the CKP pattern learn procedure (see page 11-4).

67. Test-drive the vehicle for several minutes in the range of these recorded freeze data parameters:

    - ENGINE SPEED
    - VSS
    - REL TP SENSOR
    - CLV (calculated load value)
    - APP SENSOR

68. Check for Temporary DTCs or DTCs with the HDS.

    Is DTC P0301, P0302, P0303, or P0304 indicated?

    YES—Check for poor connections or loose terminals at the ignition coil, the injector, and the PCM, then go to troubleshooting DTC P0300, P0301, P0302, P0303, or P0304 (see page 11-108). ■

    NO—Go to step 69.

69. Monitor the OBD STATUS for DTC P0301, P0302, P0303, or P0304 in the DTCs MENU with the HDS.

    Does the screen indicate PASSED?

    YES—Troubleshooting is complete. If any other Temporary DTCs or DTCs were indicated in step 68, go to the indicated DTC's troubleshooting. ■

    NO—If the screen indicates FAILED, check for poor connections or loose terminals at the ignition coil, the injector, and the PCM, then go to step 1. If the screen indicates EXECUTING, keep driving until a result comes on. If the screen indicates OUT OF CONDITION, go to step 67.

70. Update the PCM if it does not have the latest software (see page 11-7), or substitute a known-good PCM (see page 11-8).

71. Test-drive the vehicle for several minutes in the range of these recorded freeze data parameters:

    - ENGINE SPEED
    - VSS
    - REL TP SENSOR
    - CLV (calculated load value)
    - APP SENSOR

72. Check for Temporary DTCs or DTCs with the HDS.

Is DTC P0301, P0302, P0303, or P0304 indicated?

YES—Check for poor connections or loose terminals at the ignition coil, the injector, and the PCM. If the PCM was updated, substitute a known-good PCM (see page 11-8), then go to step 71. If the PCM was substituted, go to step 1.

NO—Go to step 73.

73. Monitor the OBD STATUS for DTC P0301, P0302, P0303, or P0304 in the DTCs MENU with the HDS.

Does the screen indicate PASSED?

YES—If the PCM was updated, troubleshooting is complete. If the PCM was substituted, replace the original PCM (see page 11-219). If any other Temporary DTCs or DTCs were indicated in step 72, go to the indicated DTC's troubleshooting. ■

NO—If the screen indicates FAILED, check for poor connections or loose terminals at the ignition coil, the injector, and the PCM. If the PCM was updated, substitute a known-good PCM (see page 11-8), then go to step 71. If the PCM was substituted, go to step 1. If the screen indicates EXECUTING, keep driving until a result comes on. If the screen indicates OUT OF CONDITION, go to step 71.

DTC Troubleshooting (cont'd)

DTC P0325: Knock Sensor Circuit Malfunction

NOTE: Before you troubleshoot, record all freeze data and any on-board snapshot, and review the general troubleshooting information (see page 11-3).

1. Turn the ignition switch ON (II).
2. Clear the DTC with the HDS.
3. Start the engine. Hold the engine speed between 3,000 rpm without load (in Park or neutral) until the radiator fan comes on, then let it idle.
4. Hold the engine speed between 3,000—4,000 rpm for at least 10 seconds.
5. Check for Temporary DTCs or DTCs with the HDS.

   Is DTC P0325 indicated?

   YES—Go to step 6.

   NO—Intermittent failure, the system is OK at this time. Check for poor connections or loose terminals at the knock sensor and the PCM. ■
6. Turn the ignition switch OFF.
7. Jump the SCS line with the HDS.
8. Disconnect the knock sensor 1P connector (see page 11-218).
9. Disconnect PCM connector C (44P).
10. Check for continuity between PCM connector terminal C42 and body ground.

PCM CONNECTOR C (44P)

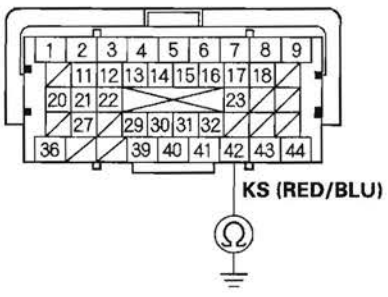

Terminal side of female terminals

Is there continuity?

YES—Repair short in the wire between the PCM (C42) and the knock sensor, then go to step 14.

NO—Go to step 11.

11. Connect the knock sensor 1P connector terminal to body ground with a jumper wire.

KNOCK SENSOR 1P CONNECTOR

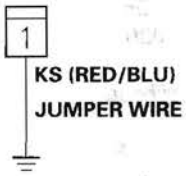

Wire side of female terminals

12. Check for continuity between PCM connector terminal C42 and body ground.

PCM CONNECTOR C (44P)

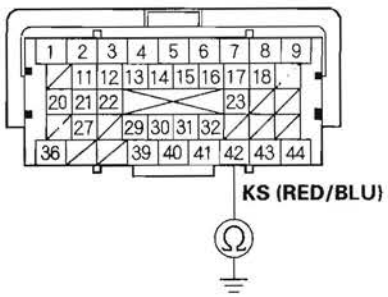

Terminal side of female terminals

Is there continuity?

YES—Go to step 13.

NO—Repair open in the wire between the PCM (C42) and the knock sensor, then go to step 14.

13. Replace the knock sensor (see page 11-218).

14. Reconnect all connectors.

15. Turn the ignition switch ON (II).

16. Reset the PCM with the HDS.

17. Do the PCM idle learn procedure (see page 11-304).

18. Hold the engine speed between 3,000—4,000 rpm for at least 10 seconds.

19. Check for Temporary DTCs or DTCs with the HDS.

    Is DTC P0325 indicated?

    YES—Go to step 21.

    NO—Go to step 20.

20. Monitor the OBD STATUS for DTC P0325 in the DTCs MENU with the HDS.

    Does the screen indicate PASSED?

    YES—Troubleshooting is complete. If any other Temporary DTCs or DTCs were indicated in step 19, go to the indicated DTC's troubleshooting. ■

    NO—If the screen indicates FAILED, check for poor connections or loose terminals at the knock sensor and the PCM, then go to step 1. If the screen indicates NOT COMPLETED, go to step 17.

21. Update the PCM if it does not have the latest software (see page 11-7), or substitute a known-good PCM (see page 11-8).

22. Hold the engine speed between 3,000—4,000 rpm for at least 10 seconds.

23. Check for Temporary DTCs or DTCs with the HDS.

    Is DTC P0325 indicated?

    YES—Check for poor connections or loose terminals at the knock sensor and the PCM. If the PCM was updated, substitute a known-good PCM (see page 11-8), then go to step 22. If the PCM was substituted, go to step 1.

    NO—Go to step 24.

24. Monitor the OBD STATUS for DTC P0325 in the DTCs MENU with the HDS.

    Does the screen indicate PASSED?

    YES—If the PCM was updated, troubleshooting is complete. If the PCM was substituted, replace the original PCM (see page 11-219). If any other Temporary DTCs or DTCs were indicated in step 23, go to the indicated DTC's troubleshooting. ■

    NO—If the screen indicates FAILED, check for poor connections or loose terminals at the knock sensor and the PCM. If the PCM was updated, substitute a known-good PCM (see page 11-8), then go to step 22. If the PCM was substituted, go to step 1. If the screen indicates NOT COMPLETED, go to step 22.

DTC Troubleshooting (cont'd)

DTC P0335: CKP Sensor No Signal

NOTE: Before you troubleshoot, record all freeze data and any on-board snapshot, and review the general troubleshooting information (see page 11-3).

1. Turn the ignition switch ON (II).
2. Clear the DTC with the HDS.
3. Start the engine.
4. Check for Temporary DTCs or DTCs with the HDS.

Is DTC P0335 indicated?

YES—Go to step 5.

NO—Intermittent failure, the system is OK at this time. Check for poor connections or loose terminals at the CKP sensor and the PCM.■

5. Turn the ignition switch OFF.
6. Disconnect the CKP sensor 3P connector.
7. Turn the ignition switch ON (II).
8. Measure voltage between CKP sensor 3P connector terminal No. 3 and body ground.

CKP SENSOR 3P CONNECTOR

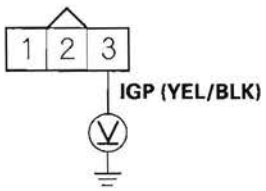

Wire side of female terminals

Is there battery voltage?

YES—Go to step 9.

NO—Repair open in the wire between the CKP sensor and PGM-FI main relay 1, then go to step 19.

9. Measure voltage between CKP sensor 3P connector terminal No. 1 and body ground.

CKP SENSOR 3P CONNECTOR

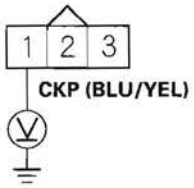

Wire side of female terminals

Is there about 5 V?

YES—Go to step 10.

NO—Go to step 11.

10. Measure voltage between CKP sensor 3P connector terminals No. 2 and No. 3.

CKP SENSOR 3P CONNECTOR

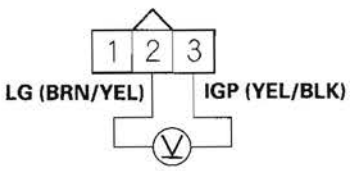

Wire side of female terminals

Is there battery voltage?

YES—Go to step 17.

NO—Repair open in the wire between the CKP sensor and G101 (see page 22-16), then go to step 19.

11. Turn the ignition switch OFF.

12. Jump the SCS line with the HDS.

13. Disconnect PCM connector C (44P).

14. Check for continuity between PCM connector terminal C32 and body ground.

PCM CONNECTOR C (44P)

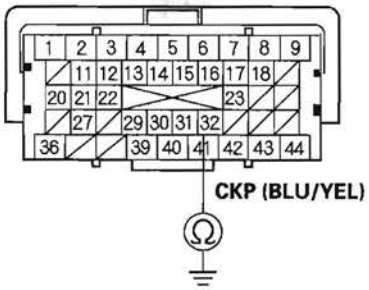

Terminal side of female terminals

Is there continuity?

YES—Repair short in the wire between the PCM (C32) and the CKP sensor, then go to step 19.

NO—Go to step 15.

15. Connect CKP sensor 3P connector terminal No. 1 to body ground with a jumper wire.

CKP SENSOR 3P CONNECTOR

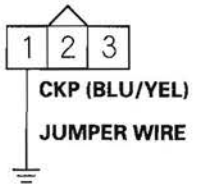

Wire side of female terminals

16. Check for continuity between PCM connector terminal C32 and body ground.

PCM CONNECTOR C (44P)

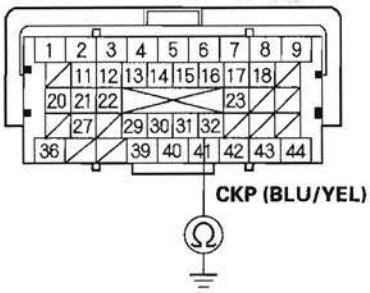

Terminal side of female terminals

Is there continuity?

YES—Go to step 26.

NO—Repair open in the wire between the PCM (C32) and the CKP sensor, then go to step 19.

17. Turn the ignition switch OFF.

18. Replace the CKP sensor (see page 11-215).

19. Reconnect all connectors.

20. Turn the ignition switch ON (II).

21. Reset the PCM with the HDS.

22. Clear the CKP pattern with the HDS.

23. Do the PCM idle learn procedure (see page 11-304).

24. Do the CKP pattern learn procedure (see page 11-4).

25. Check for Temporary DTCs or DTCs with the HDS.

Is DTC P0335 indicated?

YES—Check for poor connections or loose terminals at the CKP sensor and the PCM, then go to step 1.

NO—Troubleshooting is complete. If any other Temporary DTCs or DTCs are indicated, go to the indicated DTC's troubleshooting.■

(cont'd)

DTC Troubleshooting (cont'd)

26. Reconnect all connectors.

27. Update the PCM if it does not have the latest software (see page 11-7), or substitute a known-good PCM (see page 11-8).

28. Check for Temporary DTCs or DTCs with the HDS.

    Is DTC P0335 indicated?

    YES—Check for poor connections or loose terminals at the CKP sensor and the PCM. If the PCM was updated, substitute a known-good PCM (see page 11-8), then recheck. If the PCM was substituted, go to step 1.

    NO—If the PCM was updated, troubleshooting is complete. If the PCM was substituted, replace the original PCM (see page 11-219). If any other Temporary DTCs or DTCs are indicated, go to the indicated DTC's troubleshooting. ■

DTC P0339: CKP Sensor Intermittent Interruption

NOTE: Before you troubleshoot, record all freeze data and any on-board snapshot, and review the general troubleshooting information (see page 11-3).

1. Turn the ignition switch ON (II).
2. Clear the DTC with the HDS.
3. Start the engine, and let it idle for 10 seconds.
4. Check the CKP NOISE COUNT in the DATA LIST with the HDS.

   Are 0 counts indicated?

   YES—Go to step 7.

   NO—Go to step 5.

5. Test-drive the vehicle for several minutes in the range of these recorded freeze data parameters:

   - ENGINE SPEED
   - VSS

6. Check the CKP NOISE COUNT in the DATA LIST with the HDS.

   Are 0 counts indicated?

   YES—Go to step 7.

   NO—Intermittent failure, the system is OK at this time. Check for poor connections or loose terminals at the CKP sensor and the PCM. ■

7. Check for poor or loose connections and terminals at these locations:

   - CKP sensor
   - PCM
   - Engine ground
   - Body ground

   Are the connections and terminals OK?

   YES—Go to step 8.

   NO—Repair the connectors or terminals, then go to step 11.

8. Remove the cam chain case (see step 13 on page 6-14), and check for damage on the CKP sensor pulser plate.

   Is the pulser plate damaged?

   YES—Replace the CKP sensor pulser plate (see page 6-27), then go to step 11.

   NO—Go to step 9.

9. Turn the ignition switch OFF.
10. Replace the CKP sensor (see page 11-215).
11. Turn the ignition switch ON (II).
12. Reset the PCM with the HDS.
13. Clear the CKP pattern with the HDS.
14. Do the PCM idle learn procedure (see page 11-304).
15. Do the CKP pattern learn procedure (see page 11-4).
16. Start the engine, and let it idle for 10 seconds.
17. Check for Temporary DTCs or DTCs with the HDS.

    Is DTC P0339 indicated?

    YES—Check for poor connections or loose terminals at the CKP sensor and the PCM, then go to step 1.

    NO—Troubleshooting is complete. If any other Temporary DTCs or DTCs are indicated, go to the indicated DTC's troubleshooting. ■

DTC Troubleshooting (cont'd)

DTC P0365: CMP Sensor B No Signal

NOTE: Before you troubleshoot, record all freeze data and any on-board snapshot, and review the general troubleshooting information (see page 11-3).

1. Turn the ignition switch ON (II).
2. Clear the DTC with the HDS.
3. Start the engine.
4. Check for Temporary DTCs or DTCs with the HDS.

   Is DTC P0365 indicated?

   YES—Go to step 5.

   NO—Intermittent failure, the system is OK at this time. Check for poor connections or loose terminals at CMP sensor B and the PCM. ■
5. Turn the ignition switch OFF.
6. Disconnect the CMP sensor B 3P connector.
7. Turn the ignition switch ON (II).
8. Measure voltage between CMP sensor B 3P connector terminal No. 3 and body ground.

CMP SENSOR B 3P CONNECTOR

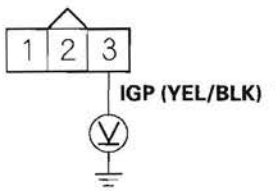

Wire side of female terminals

Is there battery voltage?

YES—Go to step 9.

NO—Repair open in the wire between CMP sensor B and PGM-FI main relay 1, then go to step 18.

9. Measure voltage between CMP sensor B 3P connector terminal No. 1 and body ground.

CMP SENSOR B 3P CONNECTOR

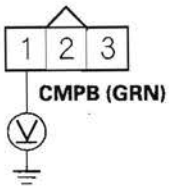

Wire side of female terminals

Is there about 5 V?

YES—Go to step 10.

NO—Go to step 11.

10. Measure voltage between CMP sensor 3P connector terminals No. 2 and No. 3.

CMP SENSOR B 3P CONNECTOR

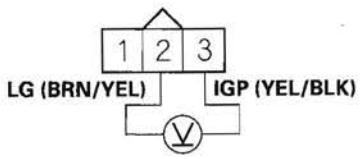

Wire side of female terminals

Is there battery voltage?

YES—Go to step 16.

NO—Repair open in the wire between CMP sensor B and G101 (see page 22-16), then go to step 18.

11. Turn the ignition switch OFF.

12. Jump the SCS line with the HDS.

13. Disconnect PCM connector C (44P).

14. Check for continuity between PCM connector terminal C31 and body ground.

PCM CONNECTOR C (44P)

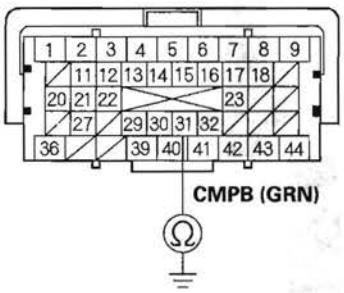

Terminal side of female terminals

Is there continuity?

YES—Repair short in the wire between the PCM (C31) and CMP sensor B, then go to step 18.

NO—Go to step 15.

15. Check for continuity between CMP sensor B 3P connector terminal No. 1 and PCM connector terminal C31.

CMP SENSOR B 3P CONNECTOR

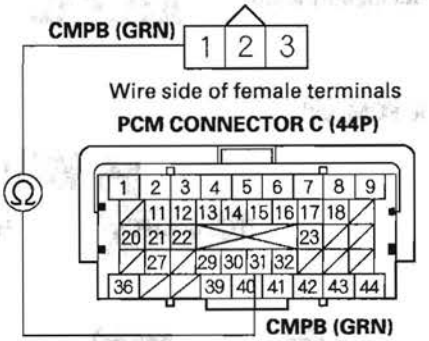

Terminal side of female terminals

Is there continuity?

YES—Go to step 23.

NO—Repair open in the wire between the PCM (C31) and CMP sensor B, then go to step 18.

(cont'd)

DTC Troubleshooting (cont'd)

16. Turn the ignition switch OFF.
17. Replace CMP sensor B (see page 11-215).
18. Reconnect all connectors.
19. Turn the ignition switch ON (II).
20. Reset the PCM with the HDS.
21. Do the PCM idle learn procedure (see page 11-304).
22. Check for Temporary DTCs or DTCs with the HDS.

    Is DTC P0365 indicated?

    YES—Check for poor connections or loose terminals at CMP sensor B and the PCM, then go to step 1.

    NO—Troubleshooting is complete. If any other Temporary DTCs or DTCs are indicated, go to the indicated DTC's troubleshooting. ■
23. Reconnect all connectors.
24. Update the PCM if it does not have the latest software (see page 11-7), or substitute a known-good PCM (see page 11-8).
25. Check for Temporary DTCs or DTCs with the HDS.

    Is DTC P0365 indicated?

    YES—Check for poor connections or loose terminals at CMP sensor B and the PCM. If the PCM was updated, substitute a known-good PCM (see page 11-8), then recheck. If the PCM was substituted, go to step 1.

    NO—If the PCM was updated, troubleshooting is complete. If the PCM was substituted, replace the original PCM (see page 11-219). If any other Temporary DTCs or DTCs are indicated, go to the indicated DTC's troubleshooting. ■

DTC P0369: CMP Sensor B Intermittent Interruption

NOTE: Before you troubleshoot, record all freeze data and any on-board snapshot, and review the general troubleshooting information (see page 11-3).

1. Turn the ignition switch ON (II).
2. Clear the DTC with the HDS.
3. Start the engine, and let it idle for 10 seconds.
4. Check the CMP NOISE B COUNT in the DATA LIST with the HDS.

   Are 0 counts indicated?

   YES—Go to step 7.

   NO—Go to step 5.

5. Test-drive the vehicle for several minutes in the range of these recorded freeze data parameters:

   - ENGINE SPEED
   - VSS

6. Check the CMP NOISE B COUNT in the DATA LIST with the HDS.

   Are 0 counts indicated?

   YES—Go to step 7.

   NO—Intermittent failure, the system is OK at this time. Check for poor connections or loose terminals at CMP sensor B and the PCM. ■

7. Check for poor or loose connections and terminals at these locations:

   - CMP sensor B
   - PCM
   - Engine ground
   - Body ground

   Are the connections and terminals OK?

   YES—Go to step 8.

   NO—Repair the connectors or terminals, then go to step 11.

8. Check for damage on the CMP sensor B pulser plate (see page 6-34).

   Is the pulser plate damaged?

   YES—Replace the CMP sensor B pulser plate (see page 6-34), then go to step 11.

   NO—Go to step 9.

9. Turn the ignition switch OFF.
10. Replace CMP sensor B (see page 11-215).
11. Turn the ignition switch ON (II).
12. Reset the PCM with the HDS.
13. Do the PCM idle learn procedure (see page 11-304).
14. Start the engine, and let it idle for 10 seconds.
15. Check for Temporary DTCs or DTCs with the HDS.

    Is DTC P0369 indicated?

    YES—Check for poor connections or loose terminals at CMP sensor B and the PCM, then go to step 1.

    NO—Troubleshooting is complete. If any other Temporary DTCs or DTCs are indicated, go to the indicated DTC's troubleshooting. ■

DTC Troubleshooting (cont'd)

DTC P050A: Cold Start Idle Air Control System Performance Problem

NOTE: Before you troubleshoot, record all freeze data and any on-board snapshot, and review the general troubleshooting information (see page 11-3).

1. Turn the ignition switch ON (II).
2. Check for Temporary DTCs or DTCs with the HDS.

   Are any Temporary DTCs or DTCs other than P050A indicated?

   YES—Go to the indicated DTC's troubleshooting. ■

   NO—Go to step 3.
3. Check for poor connections or blockage at the air intake duct.

   Is it OK?

   YES—Go to step 4.

   NO—Reconnect or repair the air intake duct, then go to step 20.
4. Check for damage at the air cleaner housing.

   Is it OK?

   YES—Go to step 5.

   NO—Replace the air cleaner housing (see page 11-340), then go to step 20.
5. Check for dirt or debris in the air cleaner element.

   Is it dirty?

   YES—Replace the air cleaner element or remove the debris (see page 11-340), then go to step 20.

   NO—Go to step 6.
6. Let the engine cool until the value of ECT SENSOR 1 is 122 °F (50 °C) or less.
7. Clear the DTC with the HDS.
8. Start the engine, and let it idle 10 seconds or more.
9. Monitor the OBD STATUS for DTC P050A in the DTCs MENU with the HDS.

   Does the screen indicate FAILED?

   YES—Go to step 10.

   NO—If the screen indicates PASSED, intermittent failure, the system is OK at this time. If the screen indicates EXECUTING, let the engine idle until a result comes on. If the screen indicates OUT OF CONDITION, go to step 6 and recheck.
10. Do the ETCS TEST in the INSPECTION MENU with the HDS.

    Is the THROTTLE ACTUATOR CONTROL VALVE normal?

    YES—Go to step 11.

    NO—Replace the throttle body (see page 11-342), then go to step 20.
11. Start the engine. Hold the engine speed at 3,000 rpm without load (in Park or neutral) until the radiator fan comes on, then let it idle.

12. Monitor the ENGINE SPEED in the DATA LIST with the HDS, and hold the engine speed at 2,500 rpm for at least 30 seconds.

13. While holding the engine speed at 2,500 rpm, check the MAF SENSOR in the DATA LIST with the HDS.

    Is there about 6.0– 8.6 gm/s?

    YES—Go to step 14.

    NO—Replace the MAF sensor/IAT sensor (see page 11-216), then go to step 20.

14. Turn the ignition switch OFF.

15. Allow the engine to cool to ambient temperature.

16. Note the ambient temperature.

17. Turn the ignition switch ON (II).

18. Note the value of IAT SENSOR quickly in the DATA LIST with the HDS.

19. Compare the value of the IAT SENSOR and the ambient temperature.

    Does the value of the IAT SENSOR differ 5.4 °F (3 °C) or more?

    YES—Replace the MAF sensor/IAT sensor (see page 11-216), then go to step 20.

    NO—Check for dirt, carbon, or damage in the throttle bore. If there is dirt or carbon, clean the throttle body (see page 11-338), then go to step 20. If there is damage in the throttle bore, replace the throttle body (see page 11-342), then go to step 20.

20. Turn the ignition switch ON (II).

21. Reset the PCM with the HDS.

22. Let the engine cool until the value of ECT SENSOR 1 is 122 °F (50 °C) or less.

23. Do the PCM idle learn procedure (see page 11-304).

24. Check for Temporary DTCs or DTCs with the HDS.

    Is DTC P050A indicated?

    YES—Check for poor connections or loose terminals at the throttle body, the MAF sensor/IAT sensor, and the PCM, then go to step 1.

    NO—Go to step 25.

25. Monitor the OBD STATUS for DTC P050A in the DTCs MENU with the HDS.

    Does the screen indicate PASSED?

    YES—Troubleshooting is complete. If any other Temporary DTCs or DTCs were indicated in step 24, go to the indicated DTC's troubleshooting. ■

    NO—If the screen indicates FAILED, check for poor connections or loose terminals at the throttle body, the MAF sensor/IAT sensor, and the PCM, then go to step 1. If the screen indicates EXECUTING, keep idling until a result comes on. If the screen indicates OUT OF CONDITION, go to step 20.

DTC Troubleshooting (cont'd)

DTC P050B: Cold Start Ignition Timing Performance

NOTE: Before you troubleshoot, record all freeze data and any on-board snapshot, and review the general troubleshooting information (see page 11-3).

1. Turn the ignition switch ON (II).
2. Check for Temporary DTCs or DTCs with the HDS.

   Are any Temporary DTCs or DTCs other than P050B indicated?

   YES—Go to the indicated DTC's troubleshooting. ■

   NO—Go to step 3.
3. Check for poor connections or blockage at the air intake duct.

   Is it OK?

   YES—Go to step 4.

   NO—Reconnect or repair the air intake duct, then go to step 26.
4. Check for damage at the air cleaner housing.

   Is it OK?

   YES—Go to step 5.

   NO—Replace the air cleaner housing (see page 11-340), then go to step 26.
5. Check for dirt or debris in the air cleaner element.

   Is it dirty?

   YES—Replace the air cleaner element or remove the debris (see page 11-340), then go to step 26.

   NO—Go to step 6.
6. Let the engine cool until the value of ECT SENSOR 1 is 122 °F (50 °C) or less.
7. Clear the DTC with the HDS.
8. Start the engine, and let it idle 10 seconds or more.
9. Monitor the OBD STATUS for DTC P050B in the DTCs MENU with the HDS.

   Does the screen indicate FAILED?

   YES—Go to step 10.

   NO—If the screen indicates PASSED, intermittent failure, the system is OK at this time. If the screen indicates EXECUTING, let the engine idle until a result comes on. If the screen indicates OUT OF CONDITION, go to step 6 and recheck.
10. Inspect the ignition timing (see page 4-18).

    Is the ignition timing OK?

    YES—Go to step 12.

    NO—Go to step 11.
11. Check for damage at the CKP sensor (see page 11-215) and the CKP sensor pulser plate (see page 6-27).

    Is the CKP sensor and/or the CKP sensor pulser plate damaged?

    YES—Replace the CKP sensor (see page 11-215) and/or the CKP sensor pulser plate (see page 6-27), then go to step 6.

    NO—Go to step 32.

12. Do the ETCS TEST in the INSPECTION MENU with the HDS.

    Is the THROTTLE ACTUATOR CONTROL VALVE normal?

    YES—Go to step 13.

    NO—Replace the throttle body (see page 11-342), then go to step 25.

13. Start the engine. Hold the engine speed at 3,000 rpm without load (in Park or neutral) until the radiator fan comes on, then let it idle.

14. Monitor the ENGINE SPEED in the DATA LIST with the HDS, and hold the engine speed at 2,500 rpm for at least 30 seconds.

15. While holding the engine speed at 2,500 rpm, check the MAF SENSOR in the DATA LIST with the HDS.

    Is there about 6.0—8.6 gm/s?

    YES—Go to step 16.

    NO—Replace the MAF sensor/IAT sensor (see page 11-216), then go to step 26.

16. Turn the ignition switch OFF.

17. Drain the coolant (see page 10-6).

18. Remove ECT sensor 1 (see page 11-217), and ECT sensor 2 (see page 11-217).

19. Allow the sensors to cool to ambient temperature.

20. Note the ambient temperature.

21. Connect ECT sensor 1 to its 2P connector, and ECT sensor 2 to its 2P connector, but do not install them on the engine.

22. Turn the ignition switch ON (II).

23. Note the value of ECT SENSOR 1 and ECT SENSOR 2 quickly in the DATA LIST with the HDS.

24. Compare the value of ECT SENSOR 1 and the ambient temperature, and the value of ECT SENSOR 2 and the ambient temperature individually.

    Does either sensor differ more than 5.4 °F (3 °C) from the ambient temperature?

    YES—Replace the sensor that differed more than 5.4 °F (3 °C) from the ambient temperature, then go to step 25.

    NO—Check and repair any problems with the following items, then go to step 25.

    - Engine compression and cylinder leakdown
    - VTEC system
    - Engine oil
    - A/C system
    - Power steering

25. Refill the engine coolant (see page 10-6).

26. Turn the ignition switch ON (II).

27. Reset the PCM with the HDS.

28. Let the engine cool until the value of ECT SENSOR 1 is 122 °F (50 °C) or less.

29. Do the PCM idle learn procedure (see page 11-304).

30. Check for Temporary DTCs or DTCs with the HDS.

    Is DTC P050B indicated?

    YES—Check for poor connections or loose terminals at the CKP sensor, the throttle body, the MAF sensor/IAT sensor, ECT sensor 1, ECT sensor 2, and the PCM, then go to step 1.

    NO—Go to step 31.

(cont'd)

DTC Troubleshooting (cont'd)

31. Monitor the OBD STATUS for DTC P050B in the DTCs MENU with the HDS.

    Does the screen indicate PASSED?

    YES—Troubleshooting is complete. If any other Temporary DTCs or DTCs were indicated in step 30, go to the indicated DTC's troubleshooting. ■

    NO—If the screen indicates FAILED, check for poor connections or loose terminals at the CKP sensor, the throttle body, the MAF sensor/IAT sensor, ECT sensor 1, ECT sensor 2, and the PCM, then go to step 1. If the screen indicates EXECUTING, keep idling until a result comes on. If the screen indicates OUT OF CONDITION, go to step 28.

32. Update the PCM if it does not have the latest software (see page 11-7), or substitute a known-good PCM (see page 11-8).

33. Let the engine cool until the value of ECT SENSOR 1 is 122 °F (50 °C) or less.

34. Do the PCM idle learn procedure (see page 11-304).

35. Check for Temporary DTCs or DTCs with the HDS.

    Is DTC P050B indicated?

    YES—Check for poor connections or loose terminals at the CKP sensor, the throttle body, the MAF sensor/IAT sensor, ECT sensor 1, ECT sensor 2, and the PCM. If the PCM was updated, substitute a known-good PCM (see page 11-8), then go to step 33. If the PCM was substituted, go to step 1.

    NO—Go to step 36.

36. Monitor the OBD STATUS for DTC P050B in the DTCs MENU with the HDS.

    Does the screen indicate PASSED?

    YES—If the PCM was updated, troubleshooting is complete. If the PCM was substituted, replace the original PCM (see page 11-219). If any other Temporary DTCs or DTCs were indicated in step 35, go to the indicated DTC's troubleshooting. ■

    NO—If the screen indicates FAILED, check for poor connections or loose terminals at the CKP sensor, the throttle body, the MAF sensor/IAT sensor, ECT sensor 1, ECT sensor 2, and the PCM. If the PCM was updated, substitute a known-good PCM (see page 11-8), then go to step 33. If the PCM was substituted, go to step 1. If the screen indicates EXECUTING, keep idling until a result comes on. If the screen indicates OUT OF CONDITION, go to step 33.

DTC P0562: Charging System Low Voltage

NOTE:
- Before you troubleshoot, record all freeze data and any on-board snapshot, and review the general troubleshooting information (see page 11-3).
- If any high current load accessories are installed, this DTC can be set.
- If DTC P16BB and/or P16BC is stored at the same time as DTC P0562, troubleshoot DTC P16BB and/or P16BC first, then recheck for DTC P0562.

1. Turn the ignition switch ON (II).
2. Clear the DTC with the HDS.
3. Start the engine.
4. Check under these conditions:
   - A/C on
   - Temperature control at maximum cool
   - Blower fan at maximum speed
   - Rear window defogger on
   - Headlights on high beam
5. Hold the engine speed at 2,000 rpm (in Park or neutral) for 1 minute.
6. Check for Temporary DTCs or DTCs with the HDS.

   Is DTC P0562 indicated?

   YES—
   - Check for poor connections or loose terminals at the alternator and the under-hood fuse/relay box, then go to step 7.
   - Replace the alternator (see page 4-32), then go to step 7.

   NO—Intermittent failure, the system is OK at this time. Check for poor connections or loose terminals at the alternator and the under-hood fuse/relay box, and check the battery performance (see page 22-65). ■
7. Turn the ignition switch ON (II).
8. Reset the PCM with the HDS.
9. Do the PCM idle learn procedure (see page 11-304).
10. Start the engine.
11. Check under these conditions:
    - A/C on
    - Temperature control at maximum cool
    - Blower fan at maximum speed
    - Rear window defogger on
    - Headlights on high beam
12. Hold the engine speed at 2,000 rpm (in Park or neutral) for 1 minute.
13. Check for Temporary DTCs or DTCs with the HDS.

    Is DTC P0562 indicated?

    YES—Check for poor connections or loose terminals at the alternator and the under-hood fuse/relay box, then go to step 1.

    NO—Troubleshooting is complete. If any other Temporary DTCs or DTCs are indicated, go to the indicated DTC's troubleshooting. ■

DTC Troubleshooting (cont'd)

DTC P0563: PCM Power Source Circuit Unexpected Voltage

NOTE: Before you troubleshoot, record all freeze data and any on-board snapshot, and review the general troubleshooting information (see page 11-3).

1. Turn the ignition switch ON (II).
2. Clear the DTC with the HDS.
3. Turn the ignition switch OFF.
4. Wait 10 seconds.
5. Turn the ignition switch ON (II).
6. Check for Temporary DTCs or DTCs with the HDS.

   Is DTC P0563 indicated?

   YES—Go to step 7.

   NO—Intermittent failure, the system is OK at this time. Check for poor connections or loose terminals at PGM-FI main relay 1 and the PCM. ■
7. Turn the ignition switch OFF.
8. Jump the SCS line with the HDS.
9. Disconnect PCM connector A (44P).
10. Measure voltage between PCM connector terminal A6 and body ground.

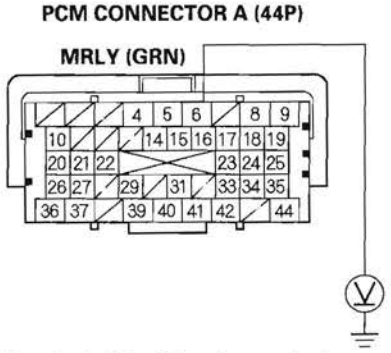

Terminal side of female terminals

Is there battery voltage?

YES—Go to step 13.

NO—Go to step 11.

11. Remove PGM-FI main relay 1 (C) from the under-hood fuse/relay box.

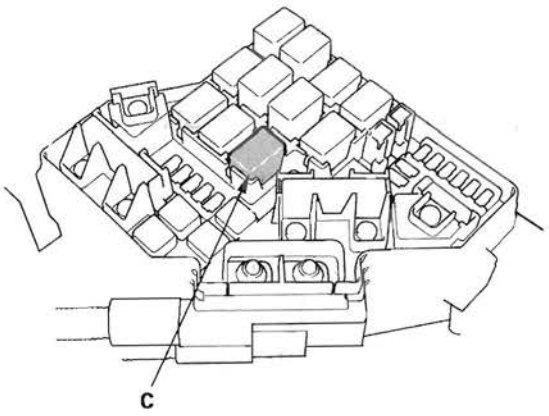

12. Check for continuity between PCM connector terminal A6 and body ground.

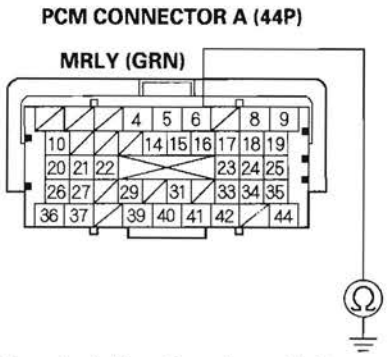

Terminal side of female terminals

Is there continuity?

YES—Repair short in the wire between the PCM (A6) and PGM-FI main relay 1, then go to step 16.

NO—Go to step 15.

13. Remove PGM-FI main relay 1 (C) from the under-hood fuse/relay box.

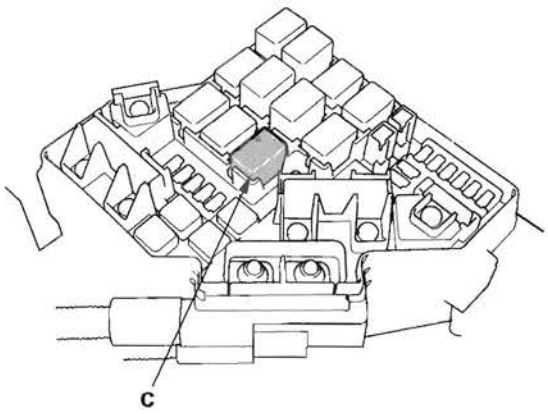

14. Measure voltage between PCM connector terminal A8 and body ground.

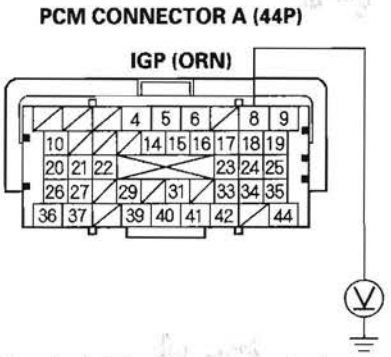

Terminal side of female terminals

Is there battery voltage?

YES—Repair short to power in the wire between the PCM (A8) and PGM-FI main relay 1, then go to step 16.

NO—Go to step 15.

15. Test PGM-FI main relay 1 (see page 22-66).

Is PGM-FI main relay 1 OK?

YES—Go to step 23.

NO—Replace PGM-FI main relay 1, then go to step 16.

(cont'd)

DTC Troubleshooting (cont'd)

16. Reconnect all connectors.
17. Turn the ignition switch ON (II).
18. Reset the PCM with the HDS.
19. Do the PCM idle learn procedure (see page 11-304).
20. Turn the ignition switch OFF.
21. Wait 10 seconds.
22. Check for Temporary DTCs or DTCs with the HDS.

    Is DTC P0563 indicated?

    YES—Check for poor connections or loose terminals at PGM-FI main relay 1 and the PCM, then go to step 1.

    NO—Troubleshooting is complete. If any other Temporary DTCs or DTCs are indicated, go to the indicated DTC's troubleshooting.■
23. Reconnect all connectors.
24. Update the PCM if it does not have the latest software (see page 11-7), or substitute a known-good PCM (see page 11-8).
25. Check for Temporary DTCs or DTCs with the HDS.

    Is DTC P0563 indicated?

    YES—Check for poor connections or loose terminals at PGM-FI main relay 1 and the PCM. If the PCM was updated, substitute a known-good PCM (see page 11-8), then recheck. If the PCM was substituted, go to step 1.

    NO—If the PCM was updated, troubleshooting is complete. If the PCM was substituted, replace the original PCM (see page 11-219). If any other Temporary DTCs or DTCs are indicated, go to the indicated DTC's troubleshooting.■

DTC P0602: PCM Programming Error

NOTE:
- Before you troubleshoot, record all freeze data and any on-board snapshot, and review the general troubleshooting information (see page 11-3).
- This DTC is indicated when a PCM update is not completed.
- Do not turn the ignition switch OFF while updating the PCM. If you turn the ignition switch OFF before completion, the PCM can be damaged.

1. Do the PCM update procedure (see page 11-7).
2. Check for Temporary DTCs or DTCs with the HDS.

   Is DTC P0602 indicated?

   YES—Replace the original PCM (see page 11-219). ■

   NO—Update is complete. If any other Temporary DTCs or DTCs are indicated, go to the indicated DTC's troubleshooting. ■

DTC P0606: PCM Processor Malfunction

NOTE: Before you troubleshoot, record all freeze data and any on-board snapshot, and review the general troubleshooting information (see page 11-3).

1. Turn the ignition switch ON (II).
2. Clear the DTC with the HDS.
3. Turn the ignition switch OFF.
4. Turn the ignition switch ON (II).
5. Wait 40 seconds.
6. Check for Temporary DTCs or DTCs with the HDS.

   Is DTC P0606 indicated?

   YES—Go to step 7.

   NO—Intermittent failure, the system is OK at this time. ■
7. Update the PCM if it does not have the latest software (see page 11-7), or substitute a known-good PCM (see page 11-8).
8. Turn the ignition switch OFF.
9. Turn the ignition switch ON (II).
10. Wait 40 seconds.
11. Check for Temporary DTCs or DTCs with the HDS.

    Is DTC P0606 indicated?

    YES—If the PCM was updated, substitute a known-good PCM (see page 11-8), then go to step 8. If the PCM was substituted, go to step 1.

    NO—If the PCM was updated, troubleshooting is complete. If the PCM was substituted, replace the original PCM (see page 11-219). If any other Temporary DTCs or DTCs are indicated, go to the indicated DTC's troubleshooting. ■

DTC Troubleshooting (cont'd)

DTC P060A: PCM (A/T system) Internal Control Module Malfunction

NOTE: Before you troubleshoot, record all freeze data and any on-board snapshot, and review the general troubleshooting information (see page 11-3).

1. Turn the ignition switch ON (II).
2. Clear the DTC with the HDS.
3. Check for Temporary DTCs or DTCs with the HDS.

   Is DTC P060A indicated?

   YES—Go to step 4.

   NO—Intermittent failure, the system is OK at this time. ■
4. Update the PCM if it does not have the latest software (see page 11-7), or substitute a known-good PCM (see page 11-8).
5. Check for Temporary DTCs or DTCs with the HDS.

   Is DTC P060A indicated?

   YES—If the PCM was updated, substitute a known-good PCM (see page 11-8), then recheck. If the PCM was substituted, go to step 1.

   NO—If the PCM was updated, troubleshooting is complete. If the PCM was substituted, replace the original PCM (see page 11-219). If any other Temporary DTCs or DTCs are indicated, go to the indicated DTC's troubleshooting. ■

DTC P062F: PCM Internal Control Module Keep Alive Memory (KAM) Error

NOTE: Before you troubleshoot, record all freeze data and any on-board snapshot, and review the general troubleshooting information (see page 11-3).

1. Turn the ignition switch ON (II).
2. Clear the DTC with the HDS.
3. Check for Temporary DTCs or DTCs with the HDS.

   Is DTC P062F indicated?

   YES—Go to step 4.

   NO—Intermittent failure, the system is OK at this time. ■
4. Update the PCM if it does not have the latest software (see page 11-7), or substitute a known-good PCM (see page 11-8).
5. Check for Temporary DTCs or DTCs with the HDS.

   Is DTC P062F indicated?

   YES—If the PCM was updated, substitute a known-good PCM (see page 11-8), then recheck. If the PCM was substituted, go to step 1.

   NO—If the PCM was updated, troubleshooting is complete. If the PCM was substituted, replace the original PCM (see page 11-219). If any other Temporary DTCs or DTCs are indicated, go to the indicated DTC's troubleshooting. ■

DTC P0630: VIN Not Programmed or Mismatch

NOTE:
- Before you troubleshoot, record all freeze data and any on-board snapshot, and review the general troubleshooting information (see page 11-3).
- This DTC is stored only when the PCM does not have the VIN information of the vehicle. Use the HDS to input the missing VIN information.

1. Turn the ignition switch ON (II).
2. Check the VIN with the HDS.

   Does the HDS show the vehicle's VIN?

   YES—Go to step 5.

   NO—Go to step 3.
3. Input the VIN to the PCM with the HDS.

   Does the screen show COMPLETE?

   YES—Go to step 5.

   NO—Go to step 4.
4. Check for DTCs with the HDS.

   Is DTC P062F indicated?

   YES—Go to the DTC P062F troubleshooting (see page 11-140).■

   NO—Go to step 9.
5. Clear the DTC with the HDS.
6. Turn the ignition switch OFF.
7. Turn the ignition switch ON (II), and wait for 5 seconds.
8. Check for Temporary DTCs or DTCs with the HDS.

   Is DTC P0630 indicated?

   YES—Go to step 9.

   NO—Intermittent failure, the system is OK at this time.■
9. Update the PCM if it does not have the latest software (see page 11-7), or substitute a known-good PCM (see page 11-8).
10. Check for Temporary DTCs or DTCs with the HDS.

    Is DTC P0630 indicated?

    YES—If the PCM was updated, substitute a known-good PCM (see page 11-8), then recheck. If the PCM was substituted, go to step 1.

    NO—If the PCM was updated, troubleshooting is complete. If the PCM was substituted, replace the original PCM (see page 11-219). If any other Temporary DTCs or DTCs are indicated, go to the indicated DTC's troubleshooting.■

DTC Troubleshooting (cont'd)

DTC P0685: PCM Power Control Circuit/ Internal Circuit Malfunction

NOTE:
- Before you troubleshoot, record all freeze data and any on-board snapshot, and review the general troubleshooting information (see page 11-3).
- If the problem doesn't return after you clear the DTC, or it this DTC is stored intermittently, check for loose terminals at the IGP line connectors before replacing the PCM.

1. Turn the ignition switch ON (II).
2. Clear the DTC with the HDS.
3. Start the engine, then let it idle for 30 seconds.
4. Turn the ignition switch OFF.
5. Start the engine, then let it idle for 30 seconds.
6. Turn the ignition switch OFF.
7. Turn the ignition switch ON (II).
8. Check for Temporary DTCs or DTCs with the HDS.

   Is DTC P0685 indicated?

   YES—Go to step 9.

   NO—Intermittent failure, the system is OK at this time.■
9. Update the PCM if it does not have the latest software (see page 11-7), or substitute a known-good PCM (see page 11-8).
10. Start the engine, then let it idle for 30 seconds.
11. Turn the ignition switch OFF.
12. Start the engine, then let it idle for 30 seconds.
13. Turn the ignition switch OFF.
14. Turn the ignition switch ON (II).
15. Check for Temporary DTCs or DTCs with the HDS.

    Is DTC P0685 indicated?

    YES—If the PCM was updated, substitute a known-good PCM (see page 11-8), then go to step 10. If the PCM was substituted, go to step 1.

    NO—If the PCM was updated, troubleshooting is complete. If the PCM was substituted, replace the original PCM (see page 11-219). If any other Temporary DTCs or DTCs are indicated, go to the indicated DTC's troubleshooting.■

DTC P0720: Output Shaft (Countershaft) Speed Sensor Circuit Malfunction

NOTE: Before you troubleshoot, record all freeze data and any on-board snapshot, and review the general troubleshooting information (see page 11-3).

1. Turn the ignition switch ON (II).
2. Clear the DTC with the HDS.
3. Turn the ignition switch OFF.
4. Start the engine.
5. Test-drive under these conditions:
   - Transmission in D position
   - Vehicle speed at 12.5 mph (20 km/h) or more for at least 10 seconds
   - During the drive, decelerate (with the throttle fully closed) from an engine speed of 4,500 rpm without applying brakes
6. Check for Temporary DTCs or DTCs with the HDS.

   Is DTC P0720 indicated?

   YES—Go to troubleshooting for DTC P0722 in the A/T system (see page 14-110), then go to step 8 in this troubleshooting.

   NO—Go to step 7.
7. Check for DTCs in the A/T system with the HDS.

   Is DTC P0722 indicated?

   YES—Go to troubleshooting for DTC P0722 in the A/T system (see page 14-110), then go to step 8 in this troubleshooting.

   NO—Intermittent failure, the system is OK at this time. Check for poor connections or loose terminals at the output shaft (countershaft) speed sensor and the PCM. ■
8. Turn the ignition switch OFF.
9. Start the engine.
10. Test-drive under these conditions:
    - Transmission in D position
    - Vehicle speed at 12.5 mph (20 km/h) or more for at least 10 seconds
    - During the drive, decelerate (with the throttle fully closed) from an engine speed of 4,500 rpm without applying brakes

(cont'd)

DTC Troubleshooting (cont'd)

11. Check for Temporary DTCs or DTCs with the HDS.

    Is DTC P0720 indicated?

    YES—Check for poor connections or loose terminals at the output shaft (countershaft) speed sensor and the PCM, then go to step 1. If the connector and terminal fits are OK, go to step 13.

    NO—Go to step 12.

12. Monitor the OBD STATUS for DTC P0720 in the DTCs MENU with the HDS.

    Does the screen indicate PASSED?

    YES—Troubleshooting is complete. If any other Temporary DTCs or DTCs were indicated in step 11, go to the indicated DTC's troubleshooting. ■

    NO—If the screen indicates FAILED, check for poor connections or loose terminals at the output shaft (countershaft) speed sensor and the PCM, then go to step 1. If the screen indicates NOT COMPLETED, go to step 9.

13. Update the PCM if it does not have the latest software (see page 11-7), or substitute a known-good PCM (see page 11-8).

14. Turn the ignition switch OFF.

15. Start the engine.

16. Test-drive under these conditions:

    - Transmission in D position
    - Vehicle speed at 12.5 mph (20 km/h) or more for at least 10 seconds
    - During the drive, decelerate (with the throttle fully closed) from an engine speed of 4,500 rpm without applying brakes

17. Check for Temporary DTCs or DTCs with the HDS.

    Is DTC P0720 indicated?

    YES—Check for poor connections or loose terminals at the output shaft (countershaft) speed sensor and the PCM. If the PCM was updated, substitute a known-good PCM (see page 11-8), then go to step 15. If the PCM was substituted, go to step 1.

    NO—Go to step 18.

18. Monitor the OBD STATUS for DTC P0720 in the DTCs MENU with the HDS.

    Does the screen indicate PASSED?

    YES—If the PCM was updated, troubleshooting is complete. If the PCM was substituted, replace the original PCM (see page 11-219). If any other Temporary DTCs or DTCs were indicated in step 17, go to the indicated DTC's troubleshooting. ■

    NO—If the screen indicates FAILED, check for poor connections or loose terminals at the output shaft (countershaft) speed sensor and the PCM. If the PCM was updated, substitute a known-good PCM (see page 11-8), then go to step 15. If the PCM was substituted, go to step 1. If the screen indicates NOT COMPLETED, go to step 15.

DTC P1109: BARO Sensor Circuit Out of Range High

NOTE: Before you troubleshoot, record all freeze data and any on-board snapshot, and review the general troubleshooting information (see page 11-3).

1. Reset the PCM with the HDS.
2. Start the engine.
3. Check for Temporary DTCs or DTCs with the HDS.

   Is DTC P1109 indicated?

   YES—Go to step 4.

   NO—Intermittent failure, the system is OK at this time. ■
4. Update the PCM if it does not have the latest software (see page 11-7), or substitute a known-good PCM (see page 11-8).
5. Check for Temporary DTCs or DTCs with the HDS.

   Is DTC P1109 indicated?

   YES—If the PCM was updated, substitute a known-good PCM (see page 11-8), then recheck. If the PCM was substituted, go to step 1.

   NO—If the PCM was updated, troubleshooting is complete. If the PCM was substituted, replace the original PCM (see page 11-219). If any other Temporary DTCs or DTCs are indicated, go to the indicated DTC's troubleshooting. ■

DTC Troubleshooting (cont'd)

DTC P1116: ECT Sensor 1 Performance Problem

NOTE:
- Before you troubleshoot, record all freeze data and any on-board snapshot, and review the general troubleshooting information (see page 11-3).
- If DTC P0111 is stored at the same time as DTC P1116, troubleshoot DTC P0111 first, then recheck for DTC P1116.

1. Check for poor connections or loose terminals at ECT sensor 1 and ECT sensor 2.

   Are the connections and terminals OK?

   YES—Go to step 2.

   NO—Repair the connectors or terminals, then go to step 27.

2. Turn the ignition switch ON (II).

3. Check for Temporary DTCs or DTCs with the HDS.

   Are DTC P1116 and P2183 indicated at the same time?

   YES—Go to step 15.

   NO—Go to step 4.

4. Start the engine, and let it idle 10 minutes.

5. Check ECT SENSOR 1 in the DATA LIST with the HDS.

   Is about 129 °F (54 °C) or less, or 1.54 V or more indicated?

   YES—Replace ECT sensor 1 (see page 11-217), then go to step 27.

   NO—Go to step 6.

6. Turn the ignition switch OFF.

7. Drain the coolant (see page 10-6).

8. Remove ECT sensor 1 (see page 11-217).

9. Allow ECT sensor 1 to cool to ambient temperature.

10. Note the ambient temperature.

11. Connect ECT sensor 1 to the 2P connector, but do not install sensor on the engine.

12. Turn the ignition switch ON (II).

13. Note the value of ECT SENSOR 1 quickly in the DATA LIST with the HDS.

14. Compare the value of ECT SENSOR 1 and the ambient temperature.

    Does the value of ECT SENSOR 1 differ 5.4 °F (3 °C) or more?

    YES—Replace ECT sensor 1 (see page 11-217), then go to step 27.

    NO—Intermittent failure, the system is OK at this time. Check for poor connections or loose terminals at ECT sensor 1, ECT sensor 2, and the PCM. ■

15. Start the engine, and let it idle 10 minutes.

16. Check ECT SENSOR 1 in the DATA LIST with the HDS.

    Is about 118 °F (48 °C) or less, or 1.75 V or more indicated?

    YES—Replace ECT sensor 1 (see page 11-217), then go to step 27.

    NO—Go to step 17.

17. Let the engine idle 10 minutes.

18. Check ECT SENSOR 2 in the DATA LIST with the HDS.

    Is about 131 °F (55 °C) or less, or 1.50 V or more indicated?

    YES—Replace ECT sensor 2 (see page 11-217), then go to step 27.

    NO—Go to step 19.

19. Turn the ignition switch OFF.

20. Drain the coolant (see page 10-6).

21. Remove ECT sensor 1 (see page 11-217) and the ECT sensor 2 (see page 11-217).

22. Allow the sensors to cool to ambient temperature.

23. Note the ambient temperature.

24. Connect ECT sensor 1 to the 2P connector, and ECT sensor 2 to the 2P connector, but do not install them on the engine.

25. Note the value of ECT SENSOR 1 and ECT SENSOR 2 quickly in the DATA LIST with the HDS.

26. Compare the value of ECT SENSOR 1 and the ambient temperature, and the value of ECT SENSOR 2 and the ambient temperature individually.

    Does one of the sensors differ more than 5.4 °F (3 °C) from the ambient temperature?

    YES—Replace the sensor that differed more than 5.4 °F (3 °C) from the ambient temperature, then go to step 27.

    NO—Intermittent failure, the system is OK at this time. Check for poor connections or loose terminals at ECT sensor 1, ECT sensor 2, and the PCM. ■

27. Refill the engine coolant (see page 10-6).

28. Turn the ignition switch ON (II).

29. Reset the PCM with the HDS.

30. Do the PCM idle learn procedure (see page 11-304).

31. Check for Temporary DTCs or DTCs with the HDS.

    Is DTC P1116 indicated?

    YES—Check for poor connections or loose terminals at ECT sensor 1, ECT sensor 2, and the PCM, then go to step 1.

    NO—Troubleshooting is complete. If any other Temporary DTCs or DTCs are indicated, go to the indicated DTC's troubleshooting. ■

DTC Troubleshooting (cont'd)

DTC P1128: MAP Sensor Signal Lower Than Expected

NOTE:
- Before you troubleshoot, record all freeze data and any on-board snapshot, and review the general troubleshooting information (see page 11-3).
- Before starting this troubleshooting check for poor connections or blockage at the air intake duct.

1. Turn the ignition switch ON (II).
2. Check the MAP SENSOR in the DATA LIST with the HDS.

   Is less than 54.1 kPa (16.0 in.Hg, 406 mmHg) or 1.61 V held for more than 5 seconds?

   YES—Go to step 7.

   NO—Go to step 3.
3. Clear the DTC with the HDS.
4. Start the engine. Hold the engine speed at 3,000 rpm without load (in Park or neutral) until the radiator fan comes on, then let it idle.
5. Test-drive under these conditions:

   - Engine coolant temperature (ECT SENSOR 1) above 158 °F (70 °C)
   - Engine speed between 1,200—5,400 rpm
   - Transmission in D position
   - Vehicle speed accelerated from 16—31 mph (25—50 km/h) under half throttle
6. Monitor the OBD STATUS for DTC P1128 in the DTCs MENU with the HDS.

   Does the screen indicate FAILED?

   YES—Go to step 7.

   NO—If the screen indicates PASSED, intermittent failure, the system is OK at this time. Check for poor connections or loose terminals at the MAP sensor and the PCM. If the screen indicates NOT COMPLETED, go to step 4 and recheck.
7. Turn the ignition switch OFF.
8. Replace the MAP sensor (see page 11-216).
9. Turn the ignition switch ON (II).
10. Reset the PCM with the HDS.
11. Do the PCM idle learn procedure (see page 11-304).
12. Start the engine. Hold the engine speed at 3,000 rpm without load (in Park or neutral) until the radiator fan comes on, then let it idle.
13. Test-drive under these conditions:

    - Engine coolant temperature (ECT SENSOR 1) above 158 °F (70 °C)
    - Engine speed between 1,200—5,400 rpm
    - Transmission in D position
    - Vehicle speed accelerated from 16—31 mph (25—50 km/h) under half throttle
14. Check for Temporary DTCs or DTCs with the HDS.

    Is DTC P1128 indicated?

    YES—Check for poor connections or loose terminals at the MAP sensor and the PCM, then go to step 1.

    NO—Go to step 15.
15. Monitor the OBD STATUS for DTC P1128 in the DTCs MENU with the HDS.

    Does the screen indicate PASSED?

    YES—Troubleshooting is complete. If any other Temporary DTCs or DTCs were indicated in step 14, go to the indicated DTC's troubleshooting. ■

    NO—If the screen indicates FAILED, check for poor connections or loose terminals at the MAP sensor and the PCM, then go to step 1. If the screen indicates NOT COMPLETED, go to step 12.

DTC P1129: MAP Sensor Signal Higher Than Expected

NOTE: Before you troubleshoot, record all freeze data and any on-board snapshot, and review the general troubleshooting information (see page 11-3).

1. Check for vacuum leaks in these parts:

   - PCV valve
   - PCV hose
   - EVAP canister purge valve
   - Throttle body
   - Intake manifold
   - Brake booster
   - Brake booster hose

   Are there any vacuum leaks?

   YES—Repair or replace parts with vacuum leaks, then go to step 9.

   NO—Go to step 2.

2. Start the engine. Hold the engine speed at 3,000 rpm without load (in Park or neutral) until the radiator fan comes on, then let it idle.

3. Check the MAP SENSOR in the DATA LIST with the HDS.

   Is more than 36.9 kPa (11.0 in.Hg, 277 mmHg) or 1.1 V held for more than for 5 seconds?

   YES—Go to step 7.

   NO—Go to step 4.

4. Clear the DTC with the HDS.

5. Test-drive under these conditions:

   - Engine coolant temperature (ECT SENSOR 1) above 158 °F (70 °C)
   - Engine speed between 1,200—5,400 rpm
   - Transmission in D position
   - Vehicle speed decelerated from more than 31 mph (50 km/h) with the throttle fully closed for at least 5 seconds

6. Monitor the OBD STATUS for DTC P1129 in the DTCs MENU with the HDS.

   Does the screen indicate FAILED?

   YES—Go to step 7.

   NO—If the screen indicates PASSED, intermittent failure, the system is OK at this time. Check for poor connections or loose terminals at the MAP sensor and the PCM. If the screen indicates NOT COMPLETED, go to step 5 and recheck.

7. Turn the ignition switch OFF.

8. Replace the MAP sensor (see page 11-216).

9. Turn the ignition switch ON (II).

10. Reset the PCM with the HDS.

11. Do the PCM idle learn procedure (see page 11-304).

12. Start the engine. Hold the engine speed at 3,000 rpm without load (in Park or neutral) until the radiator fan comes on, then let it idle.

(cont'd)

DTC Troubleshooting (cont'd)

13. Test-drive under these conditions:

    - Engine coolant temperature (ECT SENSOR 1) above 158 °F (70 °C)
    - Engine speed between 1,200—5,400 rpm
    - Transmission in D position
    - Vehicle speed decelerated from more than 31 mph (50 km/h) with the throttle fully closed for at least 5 seconds

14. Check for Temporary DTCs or DTCs with the HDS.

    Is DTC P1129 indicated?

    YES—Check for poor connections or loose terminals at the MAP sensor and the PCM, then go to step 1.

    NO—Go to step 15.

15. Monitor the OBD STATUS for DTC P1129 in the DTCs MENU with the HDS.

    Does the screen indicate PASSED?

    YES—Troubleshooting is complete. If any other Temporary DTCs or DTCs were indicated in step 14, go to the indicated DTC's troubleshooting. ■

    NO—If the screen indicates FAILED, check for poor connections or loose terminals at the MAP sensor and the PCM, then go to step 1. If the screen indicates NOT COMPLETED, go to step 12.

DTC P1157: A/F Sensor (Sensor 1) AFS Circuit High Voltage

NOTE: Before you troubleshoot, record all freeze data and any on-board snapshot, and review the general troubleshooting information (see page 11-3).

1. Turn the ignition switch ON (II).
2. Clear the DTC with the HDS.
3. Start the engine, and wait 1 minute.
4. Check for Temporary DTCs or DTCs with the HDS.

   Is DTC P1157 indicated?

   YES—Go to step 5.

   NO—Intermittent failure, the system is OK at this time. Check for poor connections or loose terminals at the A/F sensor (Sensor 1) and the PCM. ■
5. Turn the ignition switch OFF.
6. Jump the SCS line with the HDS.
7. Disconnect the A/F sensor (Sensor 1) 4P connector.
8. Disconnect PCM connector C (44P).
9. Connect A/F sensor (Sensor 1) 4P connector terminals No. 1 and No. 2 with a jumper wire.

A/F SENSOR (SENSOR 1) 4P CONNECTOR

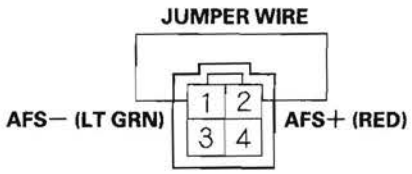

Terminal side of male terminals

10. Check for continuity between PCM connector terminals C29 and C30.

PCM CONNECTOR C (44P)

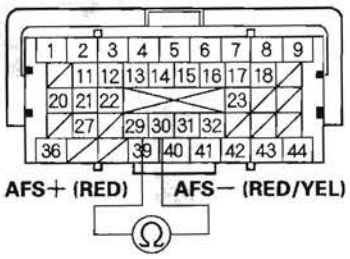

Terminal side of female terminals

Is there continuity?

YES—Go to step 14.

NO—Go to step 11.

11. Remove the jumper wire from the A/F sensor (Sensor 1) 4P connector.
12. Connect A/F sensor (Sensor 1) 4P connector terminal No. 2 to body ground with a jumper wire.

A/F SENSOR (SENSOR 1) 4P CONNECTOR

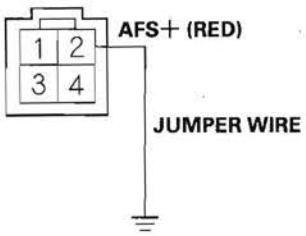

Terminal side of male terminals

(cont'd)

DTC Troubleshooting (cont'd)

13. Check for continuity between PCM connector terminal C29 and body ground.

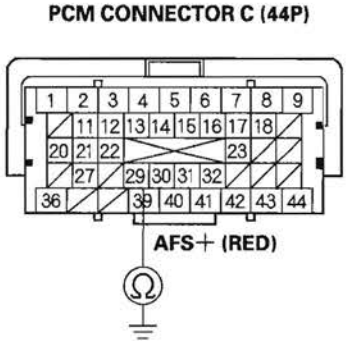

Terminal side of female terminals

Is there continuity?

YES—Repair open in the wire between the PCM (C30) and the A/F sensor (Sensor 1), then go to step 15.

NO—Repair open in the wire between the PCM (C29) and the A/F sensor (Sensor 1), then go to step 15.

14. Replace the A/F sensor (Sensor 1) (see page 11-214).

15. Reconnect all connectors.

16. Turn the ignition switch ON (II).

17. Reset the PCM with the HDS.

18. Do the PCM idle learn procedure (see page 11-304).

19. Check for Temporary DTCs or DTCs with the HDS.

Is DTC P1157 indicated?

YES—Check for poor connections or loose terminals at the A/F sensor (Sensor 1) and the PCM, then go to step 1. If the connector and terminal fits are OK, go to step 21.

NO—Go to step 20.

20. Monitor the OBD STATUS for DTC P1157 in the DTCs MENU with the HDS.

Does the screen indicate PASSED?

YES—Troubleshooting is complete. If any other Temporary DTCs or DTCs were indicated in step 19, go to the indicated DTC's troubleshooting. ■

NO—If the screen indicates FAILED, check for poor connections or loose terminals at the A/F sensor (Sensor 1) and the PCM, then go to step 1. If the screen indicates NOT COMPLETED, go to step 18.

21. Update the PCM if it does not have the latest software (see page 11-7), or substitute a known-good PCM (see page 11-8).

22. Start the engine.

23. Check for Temporary DTCs or DTCs with the HDS.

Is DTC P1157 indicated?

YES—If the PCM was updated, substitute a known-good PCM (see page 11-8), then go to step 22. If the PCM was substituted, go to step 1.

NO—Go to step 24.

24. Monitor the OBD STATUS for DTC P1157 in the DTCs MENU with the HDS.

Does the screen indicate PASSED?

YES—If the PCM was updated, troubleshooting is complete. If the PCM was substituted, replace the original PCM (see page 11-219). If any other Temporary DTCs or DTCs were indicated in step 23, go to the indicated DTC's troubleshooting. ■

NO—If the screen indicates FAILED, go to step 1. If the PCM was updated, substitute a known-good PCM (see page 11-8), then go to step 22. If the PCM was substituted, go to step 1. If the screen indicates NOT COMPLETED, keep idling until a result comes on.

DTC P1172: A/F Sensor (Sensor 1) Circuit Out of Range High

NOTE: Before you troubleshoot, record all freeze data and any on-board snapshot, and review the general troubleshooting information (see page 11-3).

1. Turn the ignition switch ON (II).
2. Clear the DTC with the HDS.
3. Start the engine. Hold the engine speed at 3,000 rpm without load (in Park or neutral) until the radiator fan comes on, then let it idle.
4. Monitor the OBD STATUS for DTC P1172 in the DTCs MENU with the HDS.

   Does the screen indicate FAILED?

   YES—Go to step 5.

   NO—If the screen indicates PASSED, intermittent failure, the system is OK at this time. Check for poor connections or loose terminals at the A/F sensor (Sensor 1) and the PCM. If the screen indicates EXECUTING, keep driving until a result comes on. If the screen indicates OUT OF CONDITION, go to step 3 and recheck.
5. Turn the ignition switch OFF.
6. Replace the A/F sensor (Sensor 1) (see page 11-214).
7. Turn the ignition switch ON (II).
8. Reset the PCM with the HDS.
9. Do the PCM idle learn procedure (see page 11-304).
10. Start the engine. Hold the engine speed at 3,000 rpm without load (in Park or neutral) until the radiator fan comes on, then let it idle.
11. Check for Temporary DTCs or DTCs with the HDS.

    Is DTC P1172 indicated?

    YES—Check for poor connections or loose terminals at the A/F sensor (Sensor 1) and the PCM, then go to step 1.

    NO—Go to step 12.
12. Monitor the OBD STATUS for DTC P1172 in the DTCs MENU with the HDS.

    Does the screen indicate PASSED?

    YES—Troubleshooting is complete. If any other Temporary DTCs or DTCs were indicated in step 11, go to the indicated DTC's troubleshooting. ■

    NO—If the screen indicates FAILED, check for poor connections or loose terminals at the A/F sensor (Sensor 1) and the PCM, then go to step 1. If the screen indicates EXECUTING, keep idling until a result comes on. If the screen indicates OUT OF CONDITION, go to step 10.

DTC Troubleshooting (cont'd)

DTC P1297: ELD Circuit Low Voltage

NOTE: Before you troubleshoot, record all freeze data and any on-board snapshot, and review the general troubleshooting information (see page 11-3).

1. Turn the ignition switch ON (II).
2. Check the ELD in the DATA LIST with the HDS.

   Is 72 A or more indicated?

   YES—Go to step 3.

   NO—Intermittent failure, the system is OK at this time. Check for poor connections or loose terminals at the ELD and the PCM. ■
3. Turn the ignition switch OFF.
4. Disconnect the ELD 3P connector.
5. Turn the ignition switch ON (II).
6. Check the ELD in the DATA LIST with the HDS.

   Is 72 A or more indicated?

   YES—Go to step 7.

   NO—Go to step 11.
7. Turn the ignition switch OFF.
8. Jump the SCS line with the HDS.
9. Disconnect PCM connector A (44P).
10. Check for continuity between PCM connector terminal A23 and body ground.

PCM CONNECTOR A (44P)

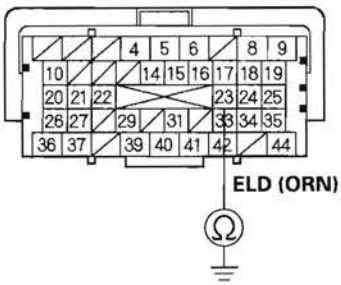

Terminal side of female terminals

Is there continuity?

YES—Repair short in the wire between the PCM (A23) and the ELD, then go to step 13.

NO—Go to step 20.

11. Turn the ignition switch OFF.
12. Replace the under-hood fuse/relay box (see page 22-63).
13. Reconnect all connectors.
14. Turn the ignition switch ON (II).
15. Reset the PCM with the HDS.
16. Do the PCM idle learn procedure (see page 11-304).
17. Start the engine.
18. Turn on the headlights.

19. Check for Temporary DTCs or DTCs with the HDS.

    Is DTC P1297 indicated?

    YES—Check for poor connections or loose terminals at the ELD and the PCM, then go to step 1.

    NO—Troubleshooting is complete. If any other Temporary DTCs or DTCs are indicated, go to the indicated DTC's troubleshooting.■

20. Reconnect all connectors.

21. Update the PCM if it does not have the latest software (see page 11-7), or substitute a known-good PCM (see page 11-8).

22. Start the engine.

23. Turn on the headlights.

24. Check for Temporary DTCs or DTCs with the HDS.

    Is DTC P1297 indicated?

    YES—Check for poor connections or loose terminals at the ELD and the PCM. If the PCM was updated, substitute a known-good PCM (see page 11-8), then go to step 22. If the PCM was substituted, go to step 1.

    NO—If the PCM was updated, troubleshooting is complete. If the PCM was substituted, replace the original PCM (see page 11-219). If any other Temporary DTCs or DTCs are indicated, go to the indicated DTC's troubleshooting.■

DTC Troubleshooting (cont'd)

DTC P1298: ELD Circuit High Voltage

NOTE: Before you troubleshoot, record all freeze data and any on-board snapshot, and review the general troubleshooting information (see page 11-3).

1. Turn the ignition switch ON (II).
2. Check the ELD in the DATA LIST with the HDS.

   Is 0.2 A or less indicated?

   YES—Go to step 3.

   NO—Intermittent failure, the system is OK at this time. Check for poor connections or loose terminals at the ELD and the PCM. ■
3. Turn the ignition switch OFF.
4. Disconnect the ELD 3P connector.
5. Turn the ignition switch ON (II).
6. Measure voltage between ELD 3P connector terminal No. 1 and body ground.

ELD 3P CONNECTOR

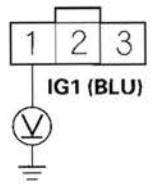

Wire side of female terminals

Is there battery voltage?

YES—Go to step 7.

NO—Check the No. 3 ALTERNATOR (10 A) fuse in the under-dash fuse/relay box. If the fuse is OK, repair open in the wire between the No. 3 ALTERNATOR (10 A) fuse and the ELD, then go to step 12.

7. Jump the SCS line with the HDS.
8. Disconnect PCM connector A (44P).
9. Check for continuity between ELD 3P connector terminal No. 3 and PCM connector terminal A23.

ELD 3P CONNECTOR

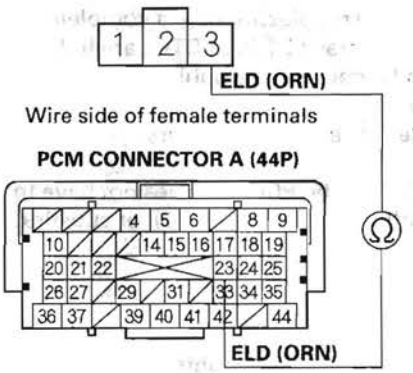

Is there continuity?

YES—Go to step 10.

NO—Repair open in the wire between the PCM (A23) and the ELD, then go to step 12.

10. Check for continuity between ELD 3P connector terminal No. 2 and body ground.

ELD 3P CONNECTOR

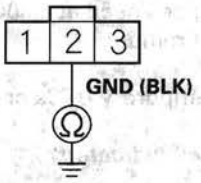

Wire side of female terminals

Is there continuity?

YES—Go to step 11.

NO—Repair open in the wire between the ELD and G302 (see page 22-22), then go to step 12.

11. Replace the under-hood fuse/relay box (see page 22-63).

12. Reconnect all connectors.

13. Turn the ignition switch ON (II).

14. Reset the PCM with the HDS.

15. Do the PCM idle learn procedure (see page 11-304).

16. Check for Temporary DTCs or DTCs with the HDS.

Is DTC P1298 indicated?

YES—Go to step 17.

NO—Troubleshooting is complete. If any other Temporary DTCs or DTCs are indicated, go to the indicated DTC's troubleshooting.■

17. Update the PCM if it does not have the latest software (see page 11-7), or substitute a known-good PCM (see page 11-8).

18. Check for Temporary DTCs or DTCs with the HDS.

Is DTC P1298 indicated?

YES—Check for poor connections or loose terminals at the ELD and the PCM. If the PCM was updated, substitute a known-good PCM (see page 11-8), then recheck. If the PCM was substituted, go to step 1.

NO—If the PCM was updated, troubleshooting is complete. If the PCM was substituted, replace the original PCM (see page 11-219). If any other Temporary DTCs or DTCs are indicated, go to the indicated DTC's troubleshooting.■

DTC Troubleshooting (cont'd)

DTC P1549: Charging System High Voltage

NOTE:
- Before you troubleshoot, record all freeze data and any on-board snapshot, and review the general troubleshooting information (see page 11-3).
- If a high voltage battery (24 V, etc.) is connected to the vehicle, this DTC can be stored.

1. Turn the ignition switch ON (II).
2. Clear the DTC with the HDS.
3. Start the engine.
4. Check under these conditions:
   - A/C off
   - Headlights off
   - Rear window defogger off
5. Hold the engine speed at 2,000 rpm (in Park or neutral) for 1 minute.
6. Check for Temporary DTCs or DTCs with the HDS.

   Is DTC P1549 indicated?

   YES—Replace the alternator (see page 4-32), then go to step 7.

   NO—Intermittent failure, the system is OK at this time. Check for poor connections or loose terminals at the alternator and the under-hood fuse/relay box. ■
7. Turn the ignition switch ON (II).
8. Reset the PCM with the HDS.
9. Do the PCM idle learn procedure (see page 11-304).
10. Start the engine.
11. Check under these conditions:
    - A/C off
    - Headlights off
    - Rear window defogger off
12. Hold the engine speed at 2,000 rpm (in Park or neutral) for 1 minute.
13. Check for Temporary DTCs or DTCs with the HDS.

    Is DTC P1549 indicated?

    YES—Check for poor connections or loose terminals at the alternator and the under-hood fuse/relay box, then go to step 1.

    NO—Troubleshooting is complete. If any other Temporary DTCs or DTCs are indicated, go to the indicated DTC's troubleshooting. ■

DTC P16BB: Alternator B Terminal Circuit Low Voltage

NOTE: Before you troubleshoot, record all freeze data and any on-board snapshot, and review the general troubleshooting information (see page 11-3).

1. Turn the ignition switch ON (II).
2. Clear the DTC with HDS.
3. Start the engine.
4. Check under these conditions:
   - A/C on
   - Temperature control at maximum cool
   - Blower fan at maximum speed
   - Rear window defogger on
   - Headlights on high beam
5. Hold the engine speed at 2,000 rpm (in Park or neutral) for 1 minute.
6. Check for Temporary DTCs or DTCs with the HDS.

   Is DTC P16BB indicated?

   YES—Go to step 7.

   NO—Intermittent failure, the system is OK at this time. Check for poor connections or loose terminals at the alternator and the under-hood fuse/relay box, and check the battery performance (see page 22-65).■
7. Check for poor connections or loose terminals at the alternator and the under-hood fuse/relay box (+B line).

   Are the connections and terminals OK?

   YES—Go to step 8.

   NO—Repair the connectors or terminals, then go to step 9.
8. Check for an open in the wire between the alternator and under-hood fuse/relay box at the starter subharness.

   Is the harness OK?

   YES—Replace the alternator (see page 4-32), then go to step 9.

   NO—Repair open in the wire between the alternator and the under-hood fuse/relay box, then go to step 9.
9. Turn the ignition switch ON (II).
10. Reset the PCM with the HDS.
11. Do the PCM idle learn procedure (see page 11-304).
12. Start the engine.
13. Check under these conditions:
    - A/C on
    - Temperature control at maximum cool
    - Blower fan at maximum speed
    - Rear window defogger on
    - Headlights on high beam
14. Hold the engine speed at 2,000 rpm (in Park or neutral) for 1 minute.
15. Check for Temporary DTCs or DTCs with the HDS.

    Is DTC P16BB indicated?

    YES—Check for poor connections or loose terminals at the alternator and the under-hood fuse/relay box, then go to step 1.

    NO—Troubleshooting is complete. If any other Temporary DTCs or DTCs are indicated, go to the indicated DTC's troubleshooting.■

DTC Troubleshooting (cont'd)

DTC P16BC: Alternator FR Terminal Circuit/ IGP Circuit Low Voltage

NOTE: Before you troubleshoot, record all freeze data and any on-board snapshot, and review the general troubleshooting information (see page 11-3).

1. Check for poor connections or loose terminals at the alternator 4P connector.

   Are the connections and terminals OK?

   YES—Go to step 2.

   NO—Repair the connector or terminals, then go to step 18.

2. Check the alternator mounting surface for corrosion.

   Is the mounting surface corroded?

   YES—Remove the alternator (see page 4-32). Clean all mounting surfaces, reinstall the alternator, then go to step 18.

   NO—Go to step 3.

3. Turn the ignition switch ON (II).

4. Clear the DTC with the HDS.

5. Start the engine.

6. Check under these conditions:

   - A/C on
   - Temperature control at maximum cool
   - Blower fan at maximum speed
   - Rear window defogger on
   - Headlights on high beam

7. Hold the engine speed 2,000 rpm (in Park or neutral) for 1 minute.

8. Check for Temporary DTCs or DTCs with the HDS.

   Is DTC P16BC indicated?

   YES—Go to step 9.

   NO—Intermittent failure, the system is OK at this time. Check for poor connections or loose terminals at the alternator. ■

9. Turn the ignition switch OFF.

10. Disconnect the alternator 4P connector.

11. Turn the ignition switch ON (II).

12. Measure voltage between alternator 4P connector terminal No. 1 and body ground.

ALTERNATOR 4P CONNECTOR

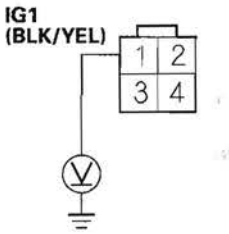

Wire side of female terminals

Is there battery voltage?

YES—Go to step 13.

NO—Repair open in the wire between the alternator (IG1 line) and the No. 3 ALTERNATOR (10 A) fuse in the under-dash fuse/relay box, then go to step 18.

13. Measure voltage between alternator 4P connector terminal No. 4 and body ground.

ALTERNATOR 4P CONNECTOR

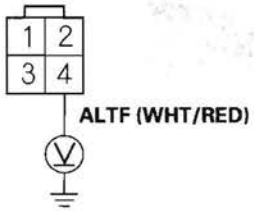

Wire side of female terminals

Is there about 5 V?

YES—Replace the alternator (see page 4-32), then go to step 18.

NO—Go to step 14.

14. Turn the ignition switch OFF.
15. Jump the SCS line with the HDS.
16. Disconnect PCM connector B (44P).
17. Check for continuity between alternator 4P connector terminal No. 4 and PCM connector terminal B43.

ALTERNATOR 4P CONNECTOR

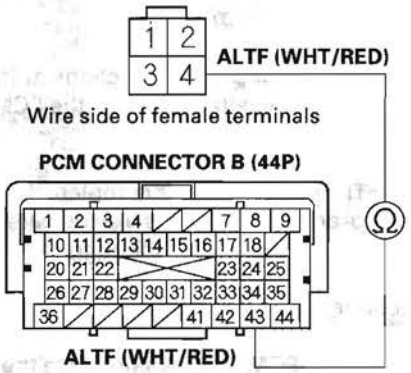

Is there continuity?

YES—Go to step 27.

NO—Repair open in the wire between the PCM (B43) and the alternator, then go to step 18.

18. Turn the ignition switch OFF.
19. Reconnect all connectors.
20. Turn the ignition switch ON (II).
21. Reset the PCM with the HDS.
22. Do the PCM idle learn procedure (see page 11-304).
23. Start the engine.
24. Check under these conditions:
    - A/C on
    - Temperature control at maximum cool
    - Blower fan at maximum speed
    - Rear window defogger on
    - Headlights on high beam

(cont'd)

DTC Troubleshooting (cont'd)

25. Hold the engine speed 2,000 rpm (in Park or neutral) for 1 minute.

26. Check for Temporary DTCs or DTCs with the HDS.

    Is DTC P16BC indicated?

    YES—Check for poor connections or loose terminals at the alternator and the PCM, then go to step 1.

    NO—Troubleshooting is complete. If any other Temporary DTCs or DTCs are indicated, go to the indicated DTC's troubleshooting. ■

27. Reconnect all connectors.

28. Update the PCM if it does not have the latest software (see page 11-7), or substitute a known-good PCM (see page 11-8).

29. Start the engine.

30. Check under these conditions:

    - A/C on
    - Temperature control at maximum cool
    - Blower fan at maximum speed
    - Rear window defogger on
    - Headlights on high beam

31. Hold the engine speed 2,000 rpm (in Park or neutral) for 1 minute.

32. Check for Temporary DTCs or DTCs with the HDS.

    Is DTC P16BC indicated?

    YES—Check for poor connections or loose terminals at the alternator and the PCM. If the PCM was updated, substitute a known-good PCM (see page 11-8), then go to step 29. If the PCM was substituted, go to step 1.

    NO—If the PCM was updated, troubleshooting is complete. If the PCM was substituted, replace the original PCM (see page 11-219). If any other Temporary DTCs or DTCs are indicated, go to the indicated DTC's troubleshooting. ■

DTC P2183: ECT Sensor 2 Range/ Performance Problem

NOTE:
- Before you troubleshoot, record all freeze data and any on-board snapshot, and review the general troubleshooting information (see page 11-3).
- If DTC P0111 is stored at the same time as DTC P2183, troubleshoot DTC P0111 first, then recheck for DTC P2183.

1. Check for poor connections or loose terminals at ECT sensor 1 and ECT sensor 2.

   Are the connections and terminals OK?

   YES—Go to step 2.

   NO—Repair the connectors or terminals, then go to step 27.

2. Turn the ignition switch ON (II).

3. Check for Temporary DTCs or DTCs with the HDS.

   Are DTC P1116 and P2183 indicated at the same time?

   YES—Go to step 15.

   NO—Go to step 4.

4. Start the engine, and let it idle 10 minutes.

5. Check ECT SENSOR 2 in the DATA LIST with the HDS.

   Is about 131 °F (55 °C) or less, or 1.50 V or more indicated?

   YES—Replace ECT sensor 2 (see page 11-217), then go to step 27.

   NO—Go to step 6.

6. Turn the ignition switch OFF.

7. Drain the coolant (see page 10-6).

8. Remove ECT sensor 2 (see page 11-217).

9. Allow ECT sensor 2 to cool to ambient temperature.

10. Note the ambient temperature.

11. Connect ECT sensor 2 to its 2P connector, but do not install it on the engine.

12. Turn the ignition switch ON (II).

13. Note the value of ECT SENSOR 2 quickly in the DATA LIST with the HDS.

14. Compare the value of ECT SENSOR 2 and the ambient temperature.

    Does ECT SENSOR 2 differ 5.4 °F (3 °C) or more?

    YES—Replace ECT sensor 2 (see page 11-217), then go to step 27.

    NO—Intermittent failure, the system is OK at this time. Check for poor connections or loose terminals at ECT sensor 1, ECT sensor 2, and the PCM. ■

15. Start the engine, and let it idle 10 minutes.

16. Check ECT SENSOR 1 in the DATA LIST with the HDS.

    Is about 118 °F (48 °C) or less, or 1.75 V or more indicated?

    YES—Replace ECT sensor 1 (see page 11-217), then go to step 27.

    NO—Go to step 17.

17. Let the engine idle 10 minutes.

18. Check ECT SENSOR 2 in the DATA LIST with the HDS.

    Is about 131 °F (55 °C) or less, or 1.50 V or more indicated?

    YES—Replace ECT sensor 2 (see page 11-217), then go to step 27.

    NO—Go to step 19.

(cont'd)

DTC Troubleshooting (cont'd)

19. Turn the ignition switch OFF.
20. Drain the coolant (see page 10-6).
21. Remove ECT sensor 1 (see page 11-217) and ECT sensor 2 (see page 11-217).
22. Allow the sensors to cool to ambient temperature.
23. Note the ambient temperature.
24. Connect ECT sensor 1 to its 2P connector, and ECT sensor 2 to its 2P connector, but do not install them on the engine.
25. Note the value of ECT SENSOR 1 and ECT SENSOR 2 quickly in the DATA LIST with the HDS.
26. Compare the value of ECT SENSOR 1 and the ambient temperature, and the value of ECT SENSOR 2 and the ambient temperature individually.

    Does one of the sensors differ more than 5.4 °F (3 °C) from the ambient temperature?

    YES—Replace the sensor that differed more than 5.4 °F (3 °C) from the ambient temperature, then go to step 27.

    NO—Intermittent failure, the system is OK at this time. Check for poor connections or loose terminals at ECT sensor 1, ECT sensor 2, and the PCM. ■
27. Turn the ignition switch ON (II).
28. Reset the PCM with the HDS.
29. Do the PCM idle learn procedure (see page 11-304).
30. Check for Temporary DTCs or DTCs with the HDS.

    Is DTC P2183 indicated?

    YES—Check for poor connections or loose terminals at ECT sensor 1, ECT sensor 2, and the PCM, then go to step 1.

    NO—Troubleshooting is complete. If any other Temporary DTCs or DTCs are indicated, go to the indicated DTC's troubleshooting. ■

DTC P2184: ECT Sensor 2 Circuit Low Voltage

NOTE: Before you troubleshoot, record all freeze data and any on-board snapshot, and review the general troubleshooting information (see page 11-3).

1. Turn the ignition switch ON (II).
2. Check ECT SENSOR 2 in the DATA LIST with the HDS.

   Is about 356 °F (180 °C) or more, or 0.08 V or less indicated?

   YES—Go to step 3.

   NO—Intermittent failure, the system is OK at this time. Check for poor connections or loose terminals at ECT sensor 2 and the PCM. ■
3. Turn the ignition switch OFF.
4. Disconnect the ECT sensor 2 2P connector.
5. Turn the ignition switch ON (II).
6. Check ECT SENSOR 2 in the DATA LIST with the HDS.

   Is about 356 °F (180 °C) or more, or 0.08 V or less indicated?

   YES—Go to step 7.

   NO—Go to step 11.
7. Turn the ignition switch OFF.
8. Jump the SCS line with the HDS.
9. Disconnect PCM connector A (44P).
10. Check for continuity between ECT sensor 2 2P connector terminal No. 1 and body ground.

ECT SENSOR 2 2P CONNECTOR

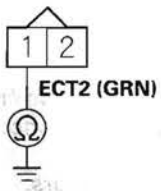

Wire side of female terminals

Is there continuity?

YES—Repair short in the wire between ECT sensor 2 and the PCM (A33), then go to step 13.

NO—Go to step 18.

11. Turn the ignition switch OFF.
12. Replace ECT sensor 2 (see page 11-217).
13. Reconnect all connectors.
14. Turn the ignition switch ON (II).
15. Reset the PCM with the HDS.
16. Do the PCM idle learn procedure (see page 11-304).

(cont'd)

DTC Troubleshooting (cont'd)

17. Check for Temporary DTCs or DTCs with the HDS.

    Is DTC P2184 indicated?

    YES—Check for poor connections or loose terminals at ECT sensor 2 and the PCM, then go to step 1.

    NO—Troubleshooting is complete. If any other Temporary DTCs or DTCs are indicated, go to the indicated DTC's troubleshooting.■

18. Reconnect all connectors.

19. Update the PCM if it does not have the latest software (see page 11-7), or substitute a known-good PCM (see page 11-8).

20. Check for Temporary DTCs or DTCs with the HDS.

    Is DTC P2184 indicated?

    YES—Check for poor connections or loose terminals at ECT sensor 2 and the PCM. If the PCM was updated, substitute a known-good PCM (see page 11-8), then recheck. If the PCM was substituted, go to step 1.

    NO—If the PCM was updated, troubleshooting is complete. If the PCM was substituted, replace the original PCM (see page 11-219). If any other Temporary DTCs or DTCs are indicated, go to the indicated DTC's troubleshooting.■

DTC P2185: ECT Sensor 2 Circuit High Voltage

NOTE: Before you troubleshoot, record all freeze data and any on-board snapshot, and review the general troubleshooting information (see page 11-3).

1. Turn the ignition switch ON (II).
2. Check ECT SENSOR 2 in the DATA LIST with the HDS.

   Is about −40 °F (−40 °C) or less, or 4.90 V or more indicated?

   YES—Go to step 3.

   NO—Intermittent failure, the system is OK at this time. Check for poor connections or loose terminals at ECT sensor 2 and the PCM. ■
3. Turn the ignition switch OFF.
4. Disconnect the ECT sensor 2 2P connector.
5. Connect ECT sensor 2 2P connector terminals No. 1 and No. 2 with a jumper wire.

ECT SENSOR 2 2P CONNECTOR

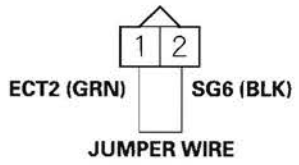

Wire side of female terminals

6. Turn the ignition switch ON (II).
7. Check ECT SENSOR 2 in the DATA LIST with the HDS.

   Is about −40 °F (−40 °C) or less, or 4.90 V or more indicated?

   YES—Go to step 8.

   NO—Go to step 20.
8. Turn the ignition switch OFF.
9. Remove the jumper wire from the ECT sensor 2 2P connector.
10. Turn the ignition switch ON (II).
11. Measure voltage between ECT sensor 2 2P connector terminal No. 1 and body ground.

ECT SENSOR 2 2P CONNECTOR

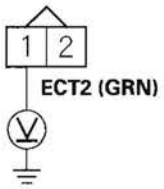

Wire side of female terminals

Is there about 5 V?

YES—Go to step 12.

NO—Go to step 16.

(cont'd)

DTC Troubleshooting (cont'd)

12. Turn the ignition switch OFF.
13. Jump the SCS line with the HDS.
14. Disconnect PCM connector A (44P).
15. Check for continuity between ECT sensor 2 2P connector terminal No. 2 and PCM connector terminal A9.

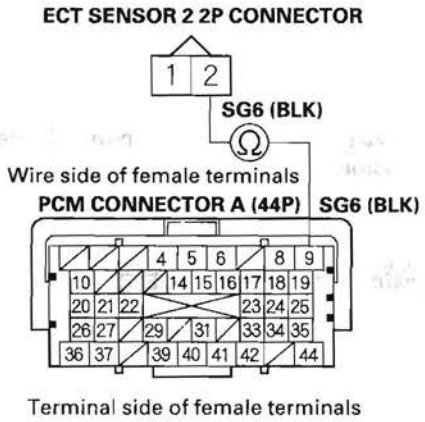

Is there continuity?

YES—Go to step 27.

NO—Repair open in the wire between the PCM (A9) and ECT sensor 2, then go to step 22.

16. Turn the ignition switch OFF.
17. Jump the SCS line with the HDS.
18. Disconnect PCM connector A (44P).
19. Check for continuity between ECT sensor 2 2P connector terminal No. 1 and PCM connector terminal A33.

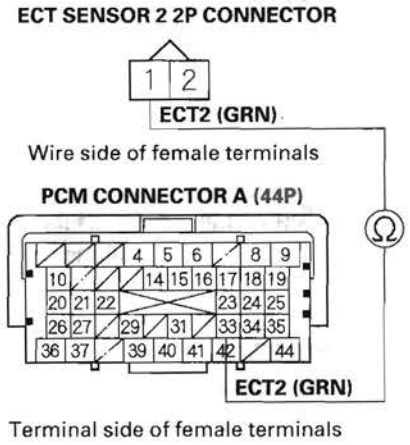

Is there continuity?

YES—Go to step 27.

NO—Repair open in the wire between the PCM (A33) and ECT sensor 2, then go to step 22.

20. Turn the ignition switch OFF.
21. Replace ECT sensor 2 (see page 11-217).
22. Reconnect all connectors.
23. Turn the ignition switch ON (II).
24. Reset the PCM with the HDS.
25. Do the PCM idle learn procedure (see page 11-304).
26. Check for Temporary DTCs or DTCs with the HDS.

    Is DTC P2185 indicated?

    YES—Check for poor connections or loose terminals at ECT sensor 2 and the PCM, then go to step 1.

    NO—Troubleshooting is complete. If any other Temporary DTCs or DTCs are indicated, go to the indicated DTC's troubleshooting.■
27. Reconnect all connectors.
28. Update the PCM if it does not have the latest software (see page 11-7), or substitute a known-good PCM (see page 11-8).
29. Check for Temporary DTCs or DTCs with the HDS.

    Is DTC P2185 indicated?

    YES—Check for poor connections or loose terminals at ECT sensor 2 and the PCM. If the PCM was updated, substitute a known-good PCM (see page 11-8), then recheck. If the PCM was substituted, go to step 1.

    NO—If the PCM was updated, troubleshooting is complete. If the PCM was substituted, replace the original PCM (see page 11-219). If any other Temporary DTCs or DTCs are indicated, go to the indicated DTC's troubleshooting.■

DTC Troubleshooting (cont'd)

DTC P2195: A/F Sensor (Sensor 1) Signal Stuck Lean

NOTE:
- Before you troubleshoot, record all freeze data and any on-board snapshot, and review the general troubleshooting information (see page 11-3).
- If the vehicle was out of fuel and the engine stalled before this DTC was stored, refuel and clear the DTC with the HDS.
- If DTC P2101, P2118, P2135, P2138, P2176, or a combination of P2122 and P2127, P2122, and P2138, or P2127 and P2138 is stored at the same time, troubleshoot them first, then recheck for DTC P2195.

1. Check the installation of the A/F sensor (Sensor 1).

   Is the A/F sensor loose or disconnected from the exhaust pipe?

   YES—Go to step 6.

   NO—Go to step 2.

2. Turn the ignition switch ON (II).

3. Clear the DTC with the HDS.

4. Start the engine. Hold the engine speed at 3,000 rpm without load (in Park or neutral) until the radiator fan comes on, then let it idle.

5. Check for Temporary DTCs or DTCs with the HDS.

   Are any Temporary DTCs or DTCs indicated?

   YES—If DTC P2195 is indicated, check for poor connections or loose terminals at the A/F sensor (Sensor 1) and the PCM, then go to step 13. If any other Temporary DTCs or DTCs are indicated, go to the indicated DTC's troubleshooting.

   NO—Intermittent failure, the system is OK at this time. Check for poor connections or loose terminals at the A/F sensor (Sensor 1) and the PCM. ■

6. Turn the ignition switch OFF.

7. Reinstall the A/F sensor (Sensor 1) (see page 11-214).

8. Turn the ignition switch ON (II).

9. Reset the PCM with the HDS.

10. Do the PCM idle learn procedure (see page 11-304).

11. Check for Temporary DTCs or DTCs with the HDS.

    Is DTC P2195 indicated?

    YES—Check for poor connections or loose terminals at the A/F sensor (Sensor 1) and the PCM, then go to step 1.

    NO—Go to step 12.

12. Monitor the OBD STATUS for DTC P2195 in the DTCs MENU with the HDS.

    Does the screen indicate PASSED?

    YES—Troubleshooting is complete. If any other Temporary DTCs or DTCs were indicated in step 11, go to the indicated DTC's troubleshooting. ■

    NO—If the screen indicates FAILED, check for poor connections or loose terminals at the A/F sensor (Sensor 1) and the PCM, then go to step 1. If the screen indicated NOT COMPLETED, go to step 10.

13. Update the PCM if it does not have the latest software (see page 11-7), or substitute a known-good PCM (see page 11-8).

14. Start the engine. Hold the engine speed at 3,000 rpm without load (in Park or neutral) until the radiator fan comes on, then let it idle.

15. Check for Temporary DTCs or DTCs with the HDS.

    Is DTC P2195 indicated?

    YES—Check for poor connections or loose terminals at the A/F sensor (Sensor 1) and the PCM. If the PCM was updated, substitute a known-good PCM (see page 11-8), then go to step 14. If the PCM was substituted, go to step 1.

    NO—Go to step 16.

16. Monitor the OBD STATUS for DTC P2195 in the DTCs MENU with the HDS.

    Does the screen indicate PASSED?

    YES—If the PCM was updated, troubleshooting is complete. If the PCM was substituted, replace the original PCM (see page 11-219).■

    NO—If the screen indicates FAILED, check for poor connections or loose terminals at the A/F sensor (Sensor 1) and the PCM. If the PCM was updated, substitute a known-good PCM (see page 11-8), then go to step 14. If the PCM was substituted, go to step 1. If the screen indicates NOT COMPLETED, go to step 14.

DTC Troubleshooting (cont'd)

DTC P2227: BARO Sensor Range/ Performance Problem

NOTE:
- Before you troubleshoot, record all freeze data and any on-board snapshot, and review the general troubleshooting information (see page 11-3).
- If DTC P0107, P0108, P1128, and/or P1129 are stored at the same time as DTC P2227, troubleshoot those DTCs first, then recheck for DTC P2227.

1. Turn the ignition switch ON (II), and wait 2 seconds.
2. Check the BARO SENSOR in the DATA LIST with the HDS.

   Is about 101 kPa (29.9 in.Hg, 760 mmHg), or about 2.9 V at sea level indicated?

   YES—Go to step 3.

   NO—Go to step 7.
3. Clear the DTC with the HDS.
4. Start the engine. Hold the engine speed at 3,000 rpm without load (in Park or neutral) until the radiator fan comes on, then let it idle.
5. Test-drive under these conditions:

   - Engine coolant temperature (ECT SENSOR 1) above 158 °F (70 °C)
   - Transmission in D position
   - REL TP SENSOR between 12 degrees and 20 degrees for 3 seconds
6. Monitor the OBD STATUS for DTC P2227 in the DTCs MENU with the HDS.

   Does the screen indicate FAILED?

   YES—Go to step 7.

   NO—If the screen indicates PASSED, intermittent failure, the system is OK at this time. If the screen indicates NOT COMPLETED, go to step 4 and recheck.
7. Update the PCM if it does not have the latest software (see page 11-7), or substitute a known-good PCM (see page 11-8).
8. Start the engine. Hold the engine speed at 3,000 rpm without load (in Park or neutral) until the radiator fan comes on, then let it idle.
9. Test-drive under these conditions:

   - Engine coolant temperature (ECT SENSOR 1) above 158 °F (70 °C)
   - Transmission in D position
   - REL TP SENSOR between 12 degrees and 20 degrees for 3 seconds
10. Check for Temporary DTCs or DTCs with the HDS.

    Is DTC P2227 indicated?

    YES—Check for poor connections or loose terminals at the PCM. If the PCM was updated, substitute a known-good PCM (see page 11-8), then go to step 8. If the PCM was substituted, go to step 1.

    NO—Go to step 11.
11. Monitor the OBD STATUS for DTC P2227 in the DTCs MENU with the HDS.

    Does the screen indicate PASSED?

    YES—If the PCM was updated, troubleshooting is complete. If the PCM was substituted, replace the original PCM (see page 11-219). If any other Temporary DTCs or DTCs were indicated in step 10, go to the indicated DTC's troubleshooting. ■

    NO—If the screen indicates FAILED, check for poor connections or loose terminals at the PCM. If the PCM was updated, substitute a known-good PCM (see page 11-8), then go to step 8. If the PCM was substituted, go to step 1. If the screen indicates NOT COMPLETED, go to step 8 and recheck.

DTC P2228: BARO Sensor Circuit Low Voltage

NOTE: Before you troubleshoot, record all freeze data and any on-board snapshot, and review the general troubleshooting information (see page 11-3).

1. Turn the ignition switch ON (II).
2. Check the BARO SENSOR in the DATA LIST with the HDS.

   Is about 43 kPa (12.7 in.Hg, 323 mmHg), or 1.31 V or less indicated?

   YES—Go to step 3.

   NO—Intermittent failure, the system is OK at this time.■
3. Update the PCM if it does not have the latest software (see page 11-7), or substitute a known-good PCM (see page 11-8).
4. Check for Temporary DTCs or DTCs with the HDS.

   Is DTC P2228 indicated?

   YES—Check for poor connections or loose terminals at the PCM. If the PCM was updated, substitute a known-good PCM (see page 11-8), then recheck. If the PCM was substituted, go to step 1.

   NO—If the PCM was updated, troubleshooting is complete. If the PCM was substituted, replace the original PCM (see page 11-219). If any other Temporary DTCs or DTCs are indicated, go to the indicated DTC's troubleshooting.■

DTC P2229: BARO Sensor Circuit High Voltage

NOTE: Before you troubleshoot, record all freeze data and any on-board snapshot, and review the general troubleshooting information (see page 11-3).

1. Turn the ignition switch ON (II).
2. Check the BARO SENSOR in the DATA LIST with the HDS.

   Is about 160 kPa (47.2 in.Hg, 1,200 mmHg), or 4.49 V or more indicated?

   YES—Go to step 3.

   NO—Intermittent failure, the system is OK at this time.■
3. Update the PCM if it does not have the latest software (see page 11-7), or substitute a known-good PCM (see page 11-8).
4. Check for Temporary DTCs or DTCs with the HDS.

   Is DTC P2229 indicated?

   YES—Check for poor connections or loose terminals at the PCM. If the PCM was updated, substitute a known-good PCM (see page 11-8), then recheck. If the PCM was substituted, go to step 1.

   NO—If the PCM was updated, troubleshooting is complete. If the PCM was substituted, replace the original PCM (see page 11-219). If any other Temporary DTCs or DTCs are indicated, go to the indicated DTC's troubleshooting.■

DTC Troubleshooting (cont'd)

DTC P2238: A/F Sensor (Sensor 1) AFS+ Line Low Voltage

NOTE: Before you troubleshoot, record all freeze data and any on-board snapshot, and review the general troubleshooting information (see page 11-3).

1. Turn the ignition switch ON (II).
2. Clear the DTC with the HDS.
3. Check for Temporary DTCs or DTCs with the HDS.

   Is DTC P2238 indicated?

   YES—Go to step 4.

   NO—Intermittent failure, the system is OK at this time. Check for poor connections or loose terminals at the A/F sensor (Sensor 1) and the PCM. ■
4. Turn the ignition switch OFF.
5. Jump the SCS line with the HDS.
6. Disconnect the A/F sensor (Sensor 1) 4P connector.
7. Disconnect PCM connector C (44P).
8. Check for continuity between PCM connector terminal C29 and body ground.

PCM CONNECTOR C (44P)

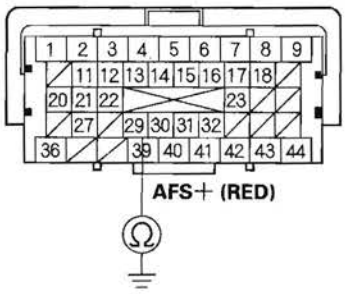

Terminal side of female terminals

Is there continuity?

YES—Repair short in the wire between the PCM (C29) and the A/F sensor (Sensor 1), then go to step 10.

NO—Go to step 9.

9. Replace the A/F sensor (Sensor 1) (see page 11-214).
10. Reconnect all connectors.
11. Turn the ignition switch ON (II).
12. Reset the PCM with the HDS.
13. Do the PCM idle learn procedure (see page 11-304).
14. Check for Temporary DTCs or DTCs with the HDS.

    Is DTC P2238 indicated?

    YES—Check for poor connections or loose terminals at the A/F sensor (Sensor 1) and the PCM, then go to step 1. If the connector and terminal fits are OK, go to step 16.

    NO—Go to step 15.
15. Monitor the OBD STATUS for DTC P2238 in the DTCs MENU with the HDS.

    Does the screen indicate PASSED?

    YES—Troubleshooting is complete. If any other Temporary DTCs or DTCs were indicated in step 14, go to the indicated DTC's troubleshooting. ■

    NO—If the screen indicates FAILED, check for poor connections or loose terminals at the A/F sensor (Sensor 1) and the PCM, then go to step 1. If the screen indicates NOT COMPLETED, go to step 12.

16. Update the PCM if it does not have the latest software (see page 11-7), or substitute a known-good PCM (see page 11-8).

17. Start the engine.

18. Check for Temporary DTCs or DTCs with the HDS.

    Is DTC P2238 indicated?

    YES—If the PCM was updated, substitute a known-good PCM (see page 11-8), then go to step 17. If the PCM was substituted, go to step 1.

    NO—Go to step 19.

19. Monitor the OBD STATUS for DTC P2238 in the DTCs MENU with the HDS.

    Does the screen indicate PASSED?

    YES—If the PCM was updated, troubleshooting is complete. If the PCM was substituted, replace the original PCM (see page 11-219). If any other Temporary DTCs or DTCs were indicated in step 18, go to the indicated DTC's troubleshooting.■

    NO—If the screen indicates FAILED, go to step 1. If the PCM was updated, substitute a known-good PCM (see page 11-8), then go to step 17. If the PCM was substituted, go to step 1. If the screen indicates NOT COMPLETED, keep idling until a result comes on.

DTC Troubleshooting (cont'd)

DTC P2252: A/F Sensor (Sensor 1) AFS— Line Low Voltage

NOTE: Before you troubleshoot, record all freeze data and any on-board snapshot, and review the general troubleshooting information (see page 11-3).

1. Turn the ignition switch ON (II).
2. Clear the DTC with the HDS.
3. Start the engine.
4. Check for Temporary DTCs or DTCs with the HDS.

   Is DTC P2252 indicated?

   YES—Go to step 5.

   NO—Intermittent failure, the system is OK at this time. Check for poor connections or loose terminals at the A/F sensor (Sensor 1) and the PCM. ■
5. Turn the ignition switch OFF.
6. Jump the SCS line with the HDS.
7. Disconnect the A/F sensor (Sensor 1) 4P connector.
8. Disconnect PCM connector C (44P).
9. Check for continuity between PCM connector terminal C30 and body ground.

PCM CONNECTOR C (44P)

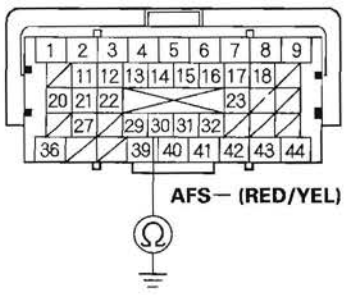

Terminal side of female terminals

Is there continuity?

YES—Repair short in the wire between the PCM (C30) and the A/F sensor (Sensor 1), then go to step 11.

NO—Go to step 10.

10. Replace the A/F sensor (Sensor 1) (see page 11-214).
11. Reconnect all connectors.
12. Turn the ignition switch ON (II).
13. Reset the PCM with the HDS.
14. Do the PCM idle learn procedure (see page 11-304).
15. Check for Temporary DTCs or DTCs with the HDS.

    Is DTC P2252 indicated?

    YES—Check for poor connections or loose terminals at the A/F sensor (Sensor 1) and the PCM, then go to step 1. If the connector and terminal fits are OK, go to step 17.

    NO—Go to step 16.

16. Monitor the OBD STATUS for DTC P2252 in the DTCs MENU with the HDS.

    Does the screen indicate PASSED?

    YES—Troubleshooting is complete. If any other Temporary DTCs or DTCs were indicated in step 15, go to the indicated DTC's troubleshooting. ■

    NO—If the screen indicates FAILED, check for poor connections or loose terminals at the A/F sensor (Sensor 1) and the PCM, then go to step 1. If the screen indicates NOT COMPLETED, go to step 13.

17. Update the PCM if it does not have the latest software (see page 11-7), or substitute a known-good PCM (see page 11-8).

18. Start the engine.

19. Check for Temporary DTCs or DTCs with the HDS.

    Is DTC P2252 indicated?

    YES—If the PCM was updated, substitute a known-good PCM (see page 11-8), then go to step 18. If the PCM was substituted, go to step 1.

    NO—Go to step 20.

20. Monitor the OBD STATUS for DTC P2252 in the DTCs MENU with the HDS.

    Does the screen indicate PASSED?

    YES—If the PCM was updated, troubleshooting is complete. If the PCM was substituted, replace the original PCM (see page 11-219). If any other Temporary DTCs or DTCs were indicated in step 19, go to the indicated DTC's troubleshooting. ■

    NO—If the screen indicates FAILED, go to step 1. If the PCM was updated, substitute a known-good PCM (see page 11-8), then go to step 18. If the PCM was substituted, go to step 1. If the screen indicates NOT COMPLETED, keep idling until a result comes on.

DTC Troubleshooting (cont'd)

DTC P2270: Secondary HO2S (Sensor 2) Circuit Signal Stuck Lean

DTC P2271: Secondary HO2S (Sensor 2) Circuit Signal Stuck Rich

NOTE: Before you troubleshoot, record all freeze data and any on-board snapshot, and review the general troubleshooting information (see page 11-3).

1. Turn the ignition switch ON (II).
2. Clear the DTC with the HDS.
3. Start the engine. Hold the engine speed at 3,000 rpm without load (in Park or neutral) until the radiator fan comes on, then let it idle.
4. Test-drive under these conditions:
   - Engine coolant temperature (ECT SENSOR 1) above 176 °F (80 °C)
   - Vehicle speed between 35—55 mph (56—88 km/h)
   - Drive 1 minute or more
5. Monitor the OBD STATUS for DTC P2270 or P2271 in the DTCs MENU with the HDS.

   Does the screen indicate FAILED?

   YES—Go to step 6.

   NO—If the screen indicates PASSED, intermittent failure, the system is OK at this time. Check for poor connections or loose terminals at the secondary HO2S (Sensor 2) and the PCM. If the screen indicates EXECUTING, keep driving until a result comes on. If the screen indicates OUT OF CONDITION, go to step 3 and recheck.
6. Turn the ignition switch OFF.
7. Replace the secondary HO2S (Sensor 2) (see page 11-214).
8. Turn the ignition switch ON (II).
9. Reset the PCM with the HDS.
10. Do the PCM idle learn procedure (see page 11-304).
11. Start the engine. Hold the engine speed at 3,000 rpm without load (in Park or neutral) until the radiator fan comes on, then let it idle.
12. Test-drive under these conditions:
    - Engine coolant temperature (ECT SENSOR 1) above 176 °F (80 °C)
    - Vehicle speed between 35—55 mph (56—88 km/h)
    - Drive 1 minute or more
13. Check for Temporary DTCs or DTCs with the HDS.

    Is DTC P2270 or P2271 indicated?

    YES—Check for poor connections or loose terminals at the secondary HO2S (Sensor 2) and the PCM, then go to step 1.

    NO—Go to step 14.
14. Monitor the OBD STATUS for DTC P2270 or P2271 in the DTCs MENU with the HDS.

    Does the screen indicate PASSED?

    YES—Troubleshooting is complete. If any other Temporary DTCs or DTCs were indicated in step 13, go to the indicated DTC's troubleshooting. ■

    NO—If the screen indicates FAILED, check for poor connections or loose terminals at the secondary HO2S (Sensor 2) and the PCM, then go to step 1. If the screen indicates EXECUTING, keep driving until a result comes on. If the screen indicates OUT OF CONDITION, go to step 11.

DTC P2610: PCM Ignition Off Internal Timer Performance Problem

NOTE: Before you troubleshoot, record all freeze data and any on-board snapshot, and review the general troubleshooting information (see page 11-3).

1. Turn the ignition switch ON (II).
2. Clear the DTC with the HDS.
3. Check for Temporary DTCs or DTCs with the HDS.

   Is DTC P2610 indicated?

   YES—Go to step 4.

   NO—Intermittent failure, the system is OK at this time. ■
4. Update the PCM if it does not have the latest software (see page 11-7), or substitute a known-good PCM (see page 11-8).
5. Check for Temporary DTCs or DTCs with the HDS.

   Is DTC P2610 indicated?

   YES—If the PCM was updated, substitute a known-good PCM (see page 11-8), then recheck. If the PCM was substituted, go to step 1.

   NO—If the PCM was updated, troubleshooting is complete. If the PCM was substituted, replace the original PCM (see page 11-219). If any other Temporary DTCs or DTCs are indicated, go to the indicated DTC's troubleshooting. ■

DTC Troubleshooting (cont'd)

DTC P2A00: A/F Sensor (Sensor 1) Range/ Performance Problem

NOTE: Before you troubleshoot, record all freeze data and any on-board snapshot, and review the general troubleshooting information (see page 11-3).

1. Turn the ignition switch ON (II).
2. Clear the DTC with the HDS.
3. Start the engine. Hold the engine speed at 3,000 rpm without load (in Park or neutral) until the radiator fan comes on, then let it idle.
4. Test-drive under these conditions:
   - Engine coolant temperature (ECT SENSOR 1) above 158 °F (70 °C)
   - Transmission in D position
   - Vehicle speed at 26 mph (41 km/h) or more, and engine speed at 3,250 rpm or less
   - Drive with the throttle fully opened for 5 seconds from an engine speed of 1,600 rpm, then slow down with the throttle completely closed.
5. Monitor the OBD STATUS for DTC P2A00 in the DTCs MENU with the HDS.

   Does the screen indicate FAILED?

   YES—Go to step 6.

   NO—If the screen indicates PASSED, intermittent failure, the system is OK at this time. Check for poor connections or loose terminals at the A/F sensor (Sensor 1) and the PCM. If the screen indicates EXECUTING, keep driving until a result comes on. If the screen indicates OUT OF CONDITION, go to step 3 and recheck.
6. Turn the ignition switch OFF.
7. Replace the A/F sensor (Sensor 1) (see page 11-214).
8. Turn the ignition switch ON (II).
9. Reset the PCM with the HDS.
10. Do the PCM idle learn procedure (see page 11-304).
11. Test-drive under these conditions:
    - Engine coolant temperature (ECT SENSOR 1) above 158 °F (70 °C)
    - Transmission in D position
    - Vehicle speed at 26 mph (41 km/h) or more, and engine speed at 3,250 rpm or less
    - Drive with the throttle fully opened for 5 seconds from an engine speed of 1,600 rpm, then slow down with the throttle completely closed.
12. Check for Temporary DTCs or DTCs with the HDS.

    Is DTC P2A00 indicated?

    YES—Check for poor connections or loose terminals at the A/F sensor (Sensor 1) and the PCM, then go to step 1.

    NO—Go to step 13.
13. Monitor the OBD STATUS for DTC P2A00 in the DTCs MENU with the HDS.

    Does the screen indicate PASSED?

    YES—Troubleshooting is complete. If any other Temporary DTCs or DTCs were indicated in step 12, go to the indicated DTC's troubleshooting. ■

    NO—If the screen indicates FAILED, check for poor connections or loose terminals at the A/F sensor (Sensor 1) and the PCM, then go to step 1. If the screen indicates EXECUTING, keep driving until a result comes on. If the screen indicates OUT OF CONDITION, go to step 10.

DTC U0028: F-CAN Malfunction (BUS-OFF (PCM))

NOTE: Before you troubleshoot, record all freeze data and any on-board snapshot, and review the general troubleshooting information (see page 11-3).

1. Turn the ignition switch ON (II).
2. Clear the DTC with the HDS.
3. Check for Temporary DTCs or DTCs with the HDS.

   Is DTC U0028 indicated?

   YES—Update the PCM if it does not have the latest software (see page 11-7), or substitute a known-good PCM (see page 11-8), then recheck. If the symptom/indication goes away with a known-good PCM, replace the original PCM (see page 11-219).■

   NO—Intermittent failure, the system is OK at this time.■

DTC Troubleshooting (cont'd)

DTC U0122: F-CAN Malfunction (PCM-VSA Modulator-Control Unit)

NOTE: Before you troubleshoot, record all freeze data and any on-board snapshot, and review the general troubleshooting information (see page 11-3).

1. Turn the ignition switch ON (II).
2. Check for Temporary DTCs or DTCs with the HDS.

   Are DTC U0028 and U0122 indicated at the same time?

   YES—Go to troubleshooting for DTC U0028. ■

   NO—Go to step 3.
3. Clear the DTC with the HDS.
4. Check for Temporary DTCs or DTCs with the HDS.

   Is DTC U0122 indicated?

   YES—Go to step 5.

   NO—Intermittent failure, the system is OK at this time. Check for poor connections or loose terminals at the gauge control module, the VSA modulator-control unit, and the PCM. ■
5. Check for communication to the VSA system with the HDS.

   Does the HDS communicate with the VSA modulator-control unit?

   YES—Go to step 6.

   NO—Go to the DLC circuit troubleshooting (see page 11-197). ■
6. Turn the ignition switch OFF.
7. Jump the SCS line with the HDS.
8. Disconnect the VSA modulator-control unit 46P connector.
9. Disconnect PCM connector A (44P).
10. Check for continuity between PCM connector terminal A36 and VSA modulator-control unit 46P connector terminal No. 39.

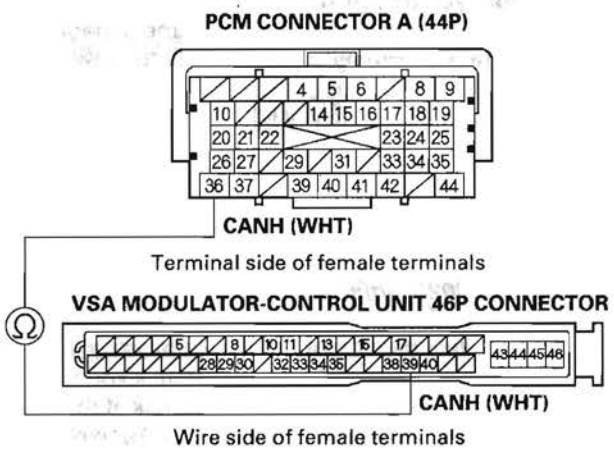

Is there continuity?

YES—Go to step 11.

NO—Repair open in the wire between the PCM (A36) and the VSA modulator-control unit, then go to step 12.

11. Check for continuity between PCM connector terminal A37 and VSA modulator-control unit 46P connector terminal No. 38.

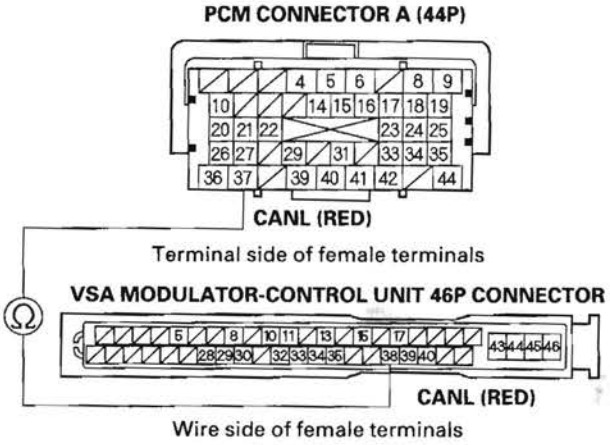

Is there continuity?

YES—Substitute a known-good VSA modulator-control unit (see page 19-97), then go to step 12 and recheck. If DTC U0122 is not indicated, replace the original VSA modulator-control unit (see page 19-97), then go to step 12.

NO—Repair open in the wire between the PCM (A37) and the VSA modulator-control unit, then go to step 12.

12. Reconnect all connectors.

13. Turn the ignition switch ON (II).

14. Reset the PCM with the HDS.

15. Do the PCM idle learn procedure (see page 11-304).

16. Check for Temporary DTCs or DTCs with the HDS.

Is DTC U0122 indicated?

YES—Check for poor connections or loose terminals at the gauge control module, the VSA modulator unit, and the PCM, then go to step 1.

NO—Troubleshooting is complete. If any other Temporary DTCs or DTCs are indicated, go to the indicated DTC's troubleshooting. ■

DTC Troubleshooting (cont'd)

DTC U0155: F-CAN Malfunction (PCM-Gauge Control Module)

NOTE: Before you troubleshoot, record all freeze data and any on-board snapshot, and review the general troubleshooting information (see page 11-3).

1. Turn the ignition switch ON (II).
2. Clear the DTC with the HDS.
3. Check for Temporary DTCs or DTCs with the HDS.

   Is DTC U0155 indicated?

   YES—Go to step 4.

   NO—Intermittent failure, the system is OK at this time. Check for poor connections or loose terminals at the gauge control module and the PCM.■
4. Check for body electrical DTCs in the DTCs MENU with the HDS.

   Is DTC B1168, B1169, and/or B1178 indicated?

   YES—Go to step 5.

   NO—Do the gauge control module input test (see page 22-245).■
5. Turn the ignition switch OFF.
6. Jump the SCS line with the HDS.
7. Remove the gauge control module (see page 22-248).
8. Disconnect the gauge control module 36P connector.
9. Disconnect PCM connector A (44P).
10. Connect gauge control module 36P connector terminal No. 34 to body ground with a jumper wire.

GAUGE CONTROL MODULE 36P CONNECTOR

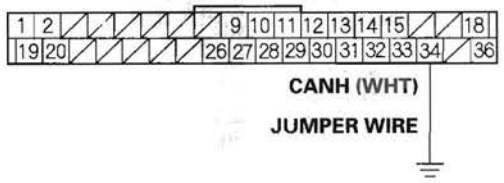

Wire side of female terminals

11. Check for continuity between PCM connector terminal A36 and body ground.

PCM CONNECTOR A (44P)

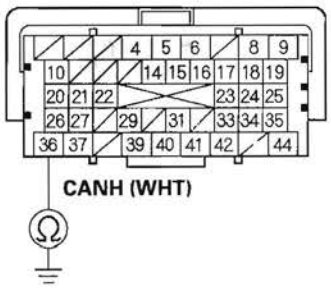

Terminal side of female terminals

Is there continuity?

YES—Go to step 12.

NO—Repair open in the wire between the PCM (A36) and the gauge control module, then go to step 14.

12. Connect gauge control module 36P connector terminal No. 33 to body ground with a jumper wire.

GAUGE CONTROL MODULE 36P CONNECTOR

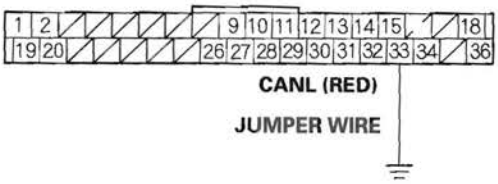

Wire side of female terminals

13. Check for continuity between PCM connector terminal A37 and body ground.

PCM CONNECTOR A (44P)

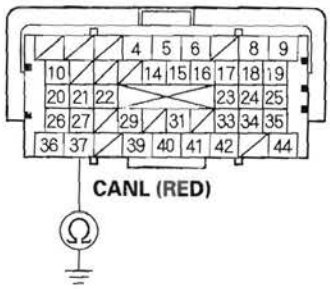

Terminal side of female terminals

Is there continuity?

YES—Substitute a known-good gauge control module (see page 22-248), then go to step 14 and recheck. If no DTCs are indicated, replace the original gauge control module (see page 22-248), then go to step 14.

NO—Repair open in the wire between the PCM (A37) and the gauge control module, then go to step 14.

14. Reconnect all connectors.

15. Turn the ignition switch ON (II).

16. Reset the PCM with the HDS.

17. Do the PCM idle learn procedure (see page 11-304).

18. Check for Temporary DTCs or DTCs with the HDS.

Is DTC U0155 indicated?

YES—Check for poor connections or loose terminals at the gauge control module and the PCM, then go to step 1.

NO—Troubleshooting is complete. If any other Temporary DTCs or DTCs are indicated, go to the indicated DTC's troubleshooting. ■

DTC Troubleshooting (cont'd)

DTC U0300: PGM-FI System and A/T System Program Version Mismatch

NOTE:
- Before you troubleshoot, record all freeze data and any on-board snapshot, and review the general troubleshooting information (see page 11-3).
- Do not turn the ignition switch OFF while updating the PCM. If you turn the ignition switch OFF before completion, the PCM will be damaged.

1. Do the PCM update procedure (PGM-FI system) (see page 11-7).
2. Do the PCM update procedure (A/T system) (see page 14-9).
3. Check for Temporary DTCs or DTCs with the HDS.

   Is DTC U0300 indicated?

   YES—Replace the original PCM (see page 11-219). ■

   NO—Troubleshooting is complete. If any other Temporary DTCs or DTCs are indicated, go to the indicated DTC's troubleshooting. ■

F-CAN Circuit Troubleshooting

NOTE: Information marked with an asterisk (*) applies to the CANL line.

1. Turn the ignition switch OFF.
2. Jump the SCS line with the HDS.
3. Disconnect PCM connector A (44P), then disconnect the HDS.
4. Measure resistance between PCM connector terminals A36 and A37.

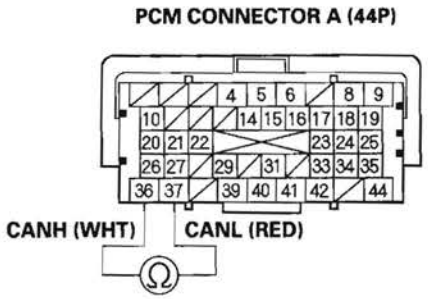

Terminal side of female terminals

Is there about 95—116 Ω ?

YES—Go to step 33.

NO—Go to step 5.

5. Disconnect the gauge control module 36P connector (see page 22-248).
6. Disconnect the VSA modulator-control unit 46P connector (see page 19-97), and the yaw rate/lateral acceleration sensor 4P connector (see page 19-95).
7. Disconnect SRS unit connector A (28P) (see step 9 on page 24-24).
8. Disconnect the TPMS unit 20P connector (see page 18-75).
9. Check for continuity between PCM connector terminals A36 and A37.

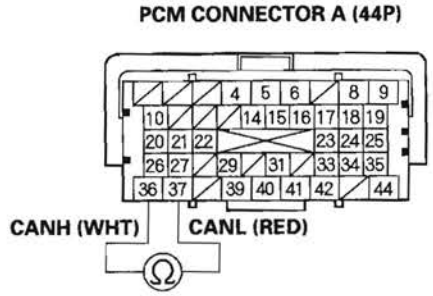

Terminal side of female terminals

Is there continuity?

YES—Repair short in the wires between PCM connector terminals A36 and A37*.■

NO—Go to step 10.

(cont'd)

F-CAN Circuit Troubleshooting (cont'd)

10. Connect PCM connector terminal A36 to body ground with a jumper wire.

PCM CONNECTOR A (44P)

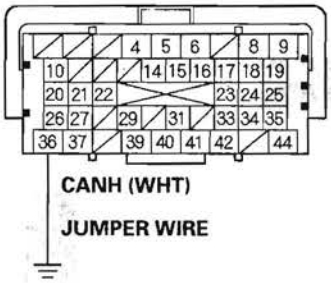

Terminal side of female terminals

11. Check for continuity between gauge control module 36P connector terminal No. 34 and body ground.

GAUGE CONTROL MODULE 36P CONNECTOR

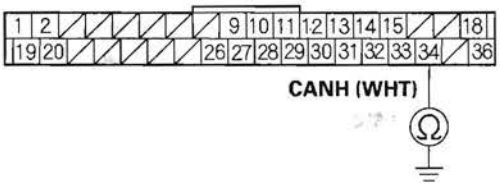

Wire side of female terminals

Is there continuity?

YES—Go to step 12.

NO—Repair open in the wire between the PCM (A36) and the gauge control module. ■

12. Check for continuity between VSA modulator-control unit 46P connector terminal No. 39 and body ground.

VSA MODULATOR-CONTROL UNIT 46P CONNECTOR

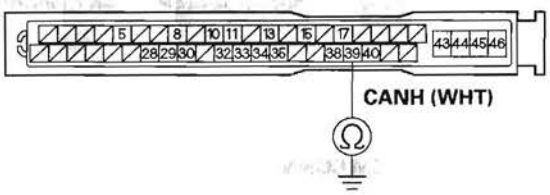

Wire side of female terminals

Is there continuity?

YES—Go to step 13.

NO—Repair open in the wire between the PCM (A36) and the VSA modulator-control unit. ■

13. Check for continuity between SRS unit connector A (28P) terminal No. 11 and body ground.

SRS UNIT CONNECTOR A (28P)

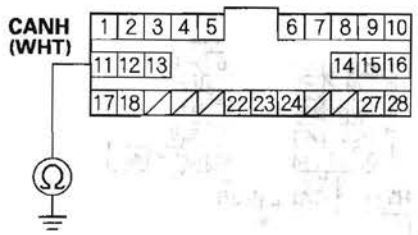

Wire side of female terminals

Is there continuity?

YES—Go to step 14.

NO—Repair open in the wire between the PCM (A36) and the SRS unit. ■

14. Remove the jumper wire from PCM connector A (44P).

15. Connect PCM connector terminal A37 to body ground with a jumper wire.

PCM CONNECTOR A (44P)

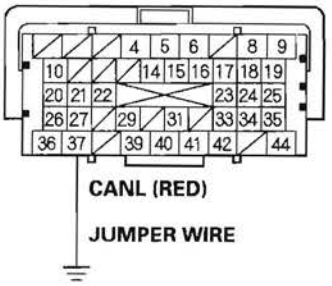

Terminal side of female terminals

16. Check for continuity between gauge control module 36P connector terminal No. 33 and body ground.

GAUGE CONTROL MODULE 36P CONNECTOR

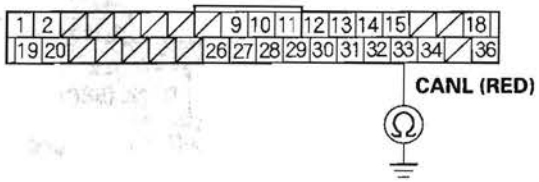

Wire side of female terminals

Is there continuity?

YES—Go to step 17.

NO—Repair open in the wire between the PCM (A37) and the gauge control module. ■

(cont'd)

F-CAN Circuit Troubleshooting (cont'd)

17. Check for continuity between VSA modulator-control unit 46P connector terminal No. 38 and body ground.

VSA MODULATOR-CONTROL UNIT 46P CONNECTOR

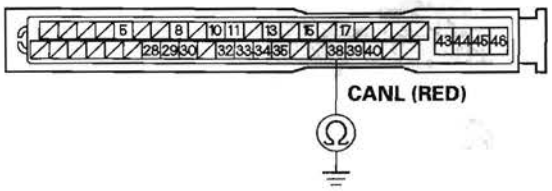

Wire side of female terminals

Is there continuity?

YES—Go to step 18.

NO—Repair open in the wire between the PCM (A37) and the VSA modulator-control unit. ■

18. Check for continuity between SRS unit connector A (28P) terminal No. 12 and body ground.

SRS UNIT CONNECTOR A (28P)

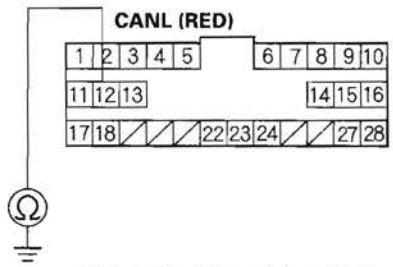

Wire side of female terminals

Is there continuity?

YES—Go to step 19.

NO—Repair open in the wire between the PCM (A37) and the SRS unit. ■

19. Reconnect the gauge control module 36P connector.

20. Measure resistance between PCM connector terminals A36 and A37.

PCM CONNECTOR A (44P)

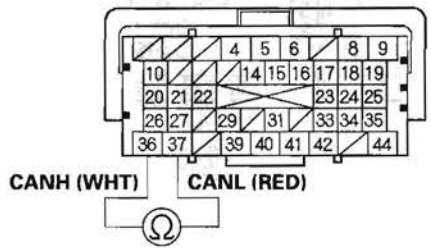

Terminal side of female terminals

Is there about 108– 132 Ω ?

YES—Go to step 21.

NO—Substitute a known-good gauge control module (see page 22-248). If the HDS identifies the vehicle, replace the original gauge control module (see page 22-248). ■

21. Disconnect the gauge control module 36P connector.

22. Reconnect the VSA modulator-control unit 46P connector.

23. Measure resistance between PCM connector terminals A36 and A37.

PCM CONNECTOR A (44P)

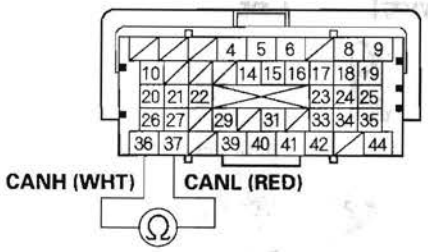

Terminal side of female terminals

Is there about 2.34–2.86 kΩ ?

YES—Go to step 24.

NO—Substitute a known-good VSA modulator-control unit (see page 19-97). If the HDS identifies the vehicle, replace the original VSA modulator-control unit (see page 19-97). ■

24. Disconnect the VSA modulator-control unit 46P connector.

25. Reconnect the yaw rate/lateral acceleration sensor 4P connector.

26. Measure resistance between PCM connector terminals A36 and A37.

PCM CONNECTOR A (44P)

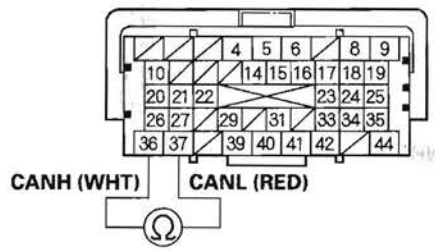

Terminal side of female terminals

Is there about 2.34–2.86 kΩ ?

YES—Go to step 27.

NO—Substitute a known-good yaw rate/lateral acceleration sensor (see page 19-95). If the HDS identifies the vehicle, replace the original yaw rate/lateral acceleration sensor (see page 19-95). ■

(cont'd)

F-CAN Circuit Troubleshooting (cont'd)

27. Disconnect the yaw rate/lateral acceleration connector.

28. Reconnect SRS unit connector A (28P).

29. Measure resistance between PCM connector terminals A36 and A37.

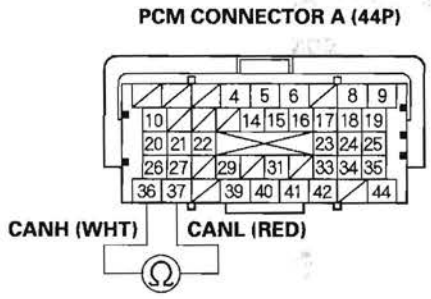

Terminal side of female terminals

Is there about 2.34–2.86 kΩ ?

YES—Go to step 30.

NO—Substitute a known-good SRS unit (see page 24-176). If the HDS identifies the vehicle, replace the original SRS unit (see page 24-176). ■

30. Disconnect SRS unit connector A (28P).

31. Reconnect the TPMS unit 20P connector.

32. Measure resistance between PCM connector terminals A36 and A37.

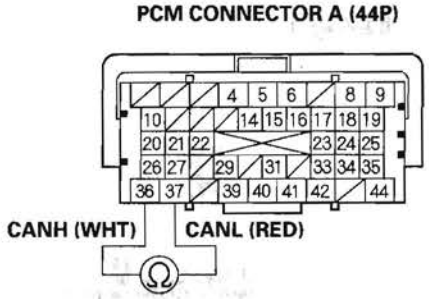

Terminal side of female terminals

Is there about 2.34–2.86 kΩ ?

YES—Update the PCM if it does not have the latest software (see page 11-7), or substitute a known-good PCM (see page 11-8), then recheck. If the symptom/indication goes away with a known-good PCM, replace the original PCM (see page 11-219). ■

NO—Substitute a known-good TPMS unit (see page 18-75). If the HDS identifies the vehicle, replace the original TPMS unit (see page 18-75). ■

33. Disconnect the gauge control module 36P connector (see page 22-248).

34. Disconnect the VSA modulator-control unit 46P connector (see page 19-97), and the yaw rate/lateral acceleration sensor 4P connector (see page 19-95).

35. Disconnect SRS unit connector A (28P) (see step 9 on page 24-24).

36. Disconnect the TPMS unit 20P connector (see page 18-75).

37. Check for continuity between PCM connector terminal A36 and body ground.

PCM CONNECTOR A (44P)

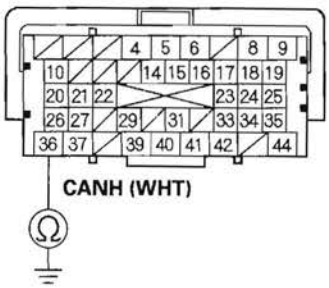

Terminal side of female terminals

Is there continuity?

YES—Repair short in the wire between the PCM connector terminal A36 and the gauge control module, the VSA modulator-control unit, the yaw late/lateral acceleration sensor, the SRS unit, the TPMS unit or the DLC. ■

NO—Go to step 38.

38. Check for continuity between PCM connector terminal A37 and body ground.

PCM CONNECTOR A (44P)

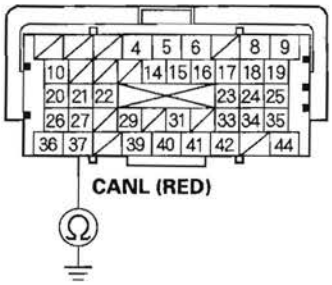

Terminal side of female terminals

Is there continuity?

YES—Repair short in the wire between PCM connector terminal A37 and the gauge control module, the VSA modulator-control unit, the yaw rate/lateral acceleration sensor, the SRS unit, the TPMS unit, or the DLC. ■

NO—Go to step 39.

(cont'd)

F-CAN Circuit Troubleshooting (cont'd)

39. Reconnect all connectors.
40. Connect the HDS to the DLC (see page 11-3).
41. Disconnect the gauge control module 36P connector.
42. Turn the ignition switch ON (II), and read the HDS.

    Does the HDS identify the vehicle?

    YES—Replace the gauge control module (see page 22-248). ■

    NO—Go to step 43.
43. Turn the ignition switch OFF.
44. Reconnect the gauge control module 36P connector.
45. Disconnect the VSA modulator-control unit 46P connector.
46. Turn the ignition switch ON (II), and read the HDS.

    Does the HDS identify the vehicle?

    YES—Replace the VSA modulator-control unit (see page 19-97). ■

    NO—Go to step 47.
47. Turn the ignition switch OFF.
48. Reconnect the VSA modulator-control unit 46P connector.
49. Disconnect the yaw rate/lateral acceleration sensor 4P connector.
50. Turn the ignition switch ON (II), and read the HDS.

    Does the HDS identify the vehicle?

    YES—Replace the yaw rate/lateral acceleration sensor (see page 19-95). ■

    NO—Go to step 51.
51. Turn the ignition switch OFF.
52. Reconnect the yaw rate/lateral acceleration sensor 4P connector.
53. Disconnect SRS unit connector A (28P).

54. Turn the ignition switch ON (II), and read the HDS.

Does the HDS identify the vehicle?

YES—Replace the SRS unit (see page 24-176). ■

NO—Go to step 55.

55. Turn the ignition switch OFF.

56. Reconnect SRS unit connector A (28P).

57. Disconnect the TPMS unit 20P connector.

58. Turn the ignition switch ON (II), and read the HDS.

Does the HDS identify the vehicle?

YES—Replace the TPMS unit (see page 18-75). ■

NO—Update the PCM if it does not have the latest software (see page 11-7), or substitute a known-good PCM (see page 11-8), then recheck. If the symptom/indication goes away with a known-good PCM, replace the original PCM (see page 11-219). ■

MIL Circuit Troubleshooting

1. Turn the ignition switch ON (II).
2. Do the gauge self-diagnostic function (see page 22-229).

   Does the MIL indicator flash?

   YES—Go to step 3.

   NO—Substitute a known-good gauge control module, and recheck. If the MIL circuit is OK, replace the original gauge control module (see page 22-248). ■
3. Connect the HDS to the DLC (see page 11-3).
4. Check the SCS in the DATA LIST with the HDS.

   Is a short indicated?

   YES—Go to step 5.

   NO—Update the PCM if it does not have the latest software (see page 11-7), or substitute a known-good PCM (see page 11-8), then recheck. If the symptom/indication goes away with a known-good PCM, replace the original PCM (see page 11-219). ■
5. Turn the ignition switch OFF.
6. Disconnect PCM connector A (44P), then disconnect the HDS.
7. Check for continuity between PCM connector terminal A31 and body ground.

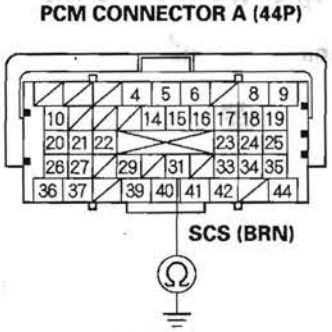

Terminal side of female terminals

Is there continuity?

YES—Repair short in the wire between the PCM (A31) and the SRS unit, the DLC. ■

NO—Update the PCM if it does not have the latest software (see page 11-7), or substitute a known-good PCM (see page 11-8), then recheck. If the symptom/indication goes away with a known-good PCM, replace the original PCM (see page 11-219). ■

DLC Circuit Troubleshooting

NOTE: Make sure the HDS and the DLC cable of the HDS is not defective.

1. Turn the ignition switch OFF.
2. Connect the HDS to the DLC (see page 11-3).

   NOTE: Make sure the HDS is properly connected to the DLC.
3. Turn the ignition switch ON (II), and read the HDS.

   Does the HDS identify the vehicle?

   YES—Go to step 4.

   NO—Go to step 21.
4. Check for Temporary DTCs or DTCs in the PGM-FI system with the HDS.

   Are any Temporary DTCs or DTCs indicated?

   YES—Go to the indicated DTC's troubleshooting. ■

   NO—Go to step 5.
5. Turn the ignition switch OFF.
6. Turn the ignition switch ON (II), and watch the SRS indicator.

   Does the SRS indicator stay on?

   YES—Go to the SRS system's general troubleshooting information (see page 24-25). ■

   NO—Go to step 7.
7. Turn the ignition switch OFF.
8. Turn the ignition switch ON (II), and watch the VSA indicator.

   Does the VSA indicator stay on?

   YES—Go to the VSA system's general troubleshooting information (see page 19-41). ■

   NO—Go to step 9.
9. Turn the ignition switch OFF.
10. Turn the ignition switch ON (II), and watch the TPMS indicator.

    Does the TPMS indicator stay on?

    YES—Go to the TPMS system's general troubleshooting information (see page 18-47). ■

    NO—Go to step 11.

(cont'd)

DLC Circuit Troubleshooting (cont'd)

11. Turn the ignition switch OFF.

12. Turn the ignition switch ON (II), and watch the immobilizer indicator.

    Does the immobilizer indicator stay on or flash?

    YES—Go to the immobilizer system's troubleshooting (see page 22-292).■

    NO—Go to step 13.

13. Do the gauge self-diagnostic function (see page 22-229).

14. Check for B-CAN system DTCs without the HDS (see page 22-229).

    Are any B-CAN DTCs indicated?

    YES—Go to the indicated DTC's troubleshooting.■

    NO—Go to step 15.

15. Turn the ignition switch OFF.

16. Disconnect the HDS from the DLC.

17. Check for continuity between DLC terminal No. 7 and body ground.

DATA LINK CONNECTOR (DLC)

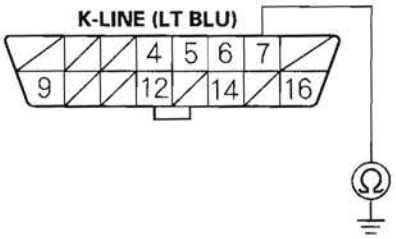

Terminal side of female terminals

Is there 5 Ω or less?

YES—Go to step 18.

NO—Go to step 19.

18. Continue to check for continuity between DLC terminal No. 7 and body ground, while disconnecting these parts, one at a time:

    - SRS unit connector A (28P)
    - VSA modulator-control unit 46P connector
    - TPMS unit 20P connector
    - Immobilizer-keyless control unit 7P connector
    - Audio unit 17P connector
    - Under-dash fuse/relay box (Q) (16P) connector

    Does continuity go away when one of the above components is disconnected?

    YES—Replace the part that caused an open when it was disconnected.■

    NO—Repair short in the wire between the DLC (K-line) and the VSA modulator-control unit, the SRS unit, the TPMS unit, the immobilizer-keyless control unit, the audio unit, or the under-dash fuse/relay box.■

19. Connect DLC terminal No. 7 to body ground with a jumper wire.

DATA LINK CONNECTOR (DLC)

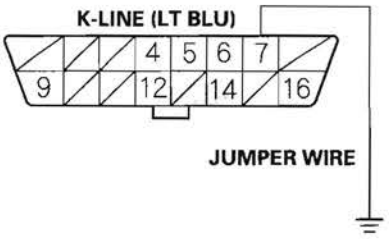

Terminal side of female terminals

20. Check for continuity between body ground and these connector terminals:

Connector	Terminal
SRS unit A (28P)	No. 24 (LT BLU)
VSA modulator-control unit 46P	No. 15 (LT BLU)
TPMS unit 20P	No. 7 (LT BLU)
Immobilizer-keyless control unit 7P	No. 5 (LT BLU)
Audio unit 17P	No. 6 (LT BLU)
Under-dash fuse/relay box (Q) (16P)	No. 8 (LT BLU)

Is there continuity between the DLC terminal and each of the terminals in the chart?

YES—Replace the part that does not communicate with the HDS.■

NO—Repair open in the wire between the DLC (K-line) and the appropriate connector.■

21. Do the gauge self-diagnostic function (see page 22-229).

22. Check for B-CAN system DTCs without the HDS (see page 22-70).

Is DTC B1168, B1169, and/or B1178 indicated?

YES—Go to step 35.

NO—Go to step 23.

23. Turn the ignition switch OFF.

24. Disconnect the HDS from the DLC.

25. Measure voltage between DLC terminal No. 16 and body ground.

DATA LINK CONNECTOR (DLC)

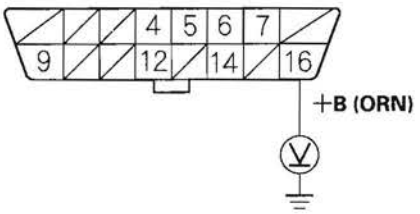

Terminal side of female terminals

Is there battery voltage?

YES—Go to step 26.

NO—Repair open in the wire between DLC terminal No. 16 and the No. 23 BACK UP (10 A) fuse in the under-hood fuse/relay box.■

(cont'd)

DLC Circuit Troubleshooting (cont'd)

26. Measure voltage between DLC terminals No. 4 and No. 16.

DATA LINK CONNECTOR (DLC)

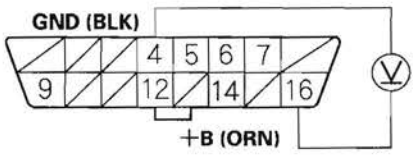

Terminal side of female terminals

Is there battery voltage?

YES—Go to step 27.

NO—Repair open in the wire between DLC terminal No. 4 and body ground (G502) (see page 22-30). ■

27. Connect the HDS to the DLC (see page 11-3).
28. Jump the SCS line with the HDS.
29. Disconnect PCM connector A (44P).
30. Disconnect the HDS from the DLC.
31. Connect DLC terminal No. 6 to body ground with a jumper wire.

DATA LINK CONNECTOR (DLC)

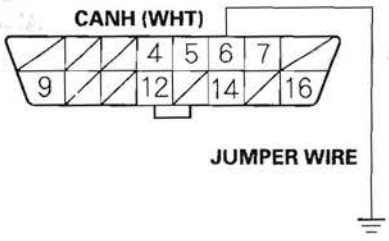

Terminal side of female terminals

32. Check for continuity between PCM connector terminal A36 and body ground.

PCM CONNECTOR A (44P)

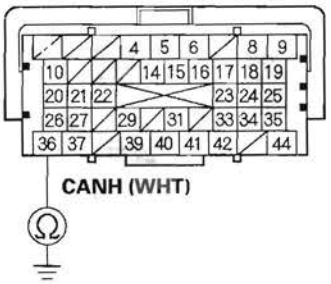

Terminal side of female terminals

Is there continuity?

YES—Go to step 33.

NO—Repair open in the wire between the PCM (A36) and DLC terminal No. 6. ■

33. Connect DLC terminal No. 14 to body ground with a jumper wire.

DATA LINK CONNECTOR (DLC)

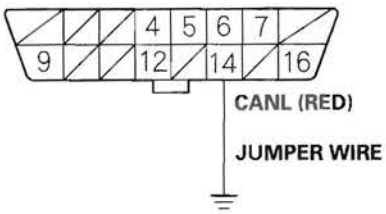

Terminal side of female terminals

34. Check for continuity between PCM connector terminal A37 and body ground.

PCM CONNECTOR A (44P)

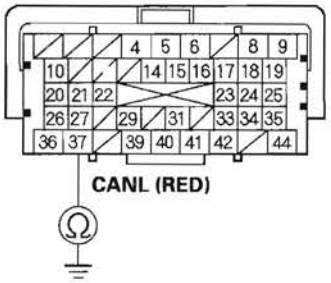

Terminal side of female terminals

Is there continuity?

YES—Update the PCM if it does not have the latest software (see page 11-7), or substitute a known-good PCM (see page 11-8), then recheck. If the symptom/indication goes away with a known-good PCM, replace the original PCM (see page 11-219). ■

NO—Repair open in the wire between the PCM (A37) and DLC terminal No. 14. ■

35. Try to start the engine.

Does the engine start and idle smoothly?

YES—Go to F-CAN circuit troubleshooting (see page 11-187). ■

NO—Go to step 36.

36. Turn the ignition switch OFF.

37. Check the No. 2 IG MAIN (50 A) fuse in the under-hood fuse/relay box.

Is the fuse OK?

YES—Repair open in the wire between the No. 2 IG MAIN (50 A) fuse and the ignition switch. If the wire is OK, go to step 38.

NO—Repair short in the wire between the No. 2 IG MAIN (50 A) fuse and the under-hood fuse/relay box. Also replace the No. 2 IG MAIN (50 A) fuse. ■

(cont'd)

DLC Circuit Troubleshooting (cont'd)

38. Inspect the No. 19 FI MAIN (15 A) fuse in the under-hood fuse/relay box.

    Is the fuse OK?

    YES—Go to step 45.

    NO—Go to step 39.

39. Remove the blown No. 19 FI MAIN (15 A) fuse from the under-hood fuse/relay box.

40. Remove PGM-FI main relay 1 (C) from the under-hood fuse/relay box.

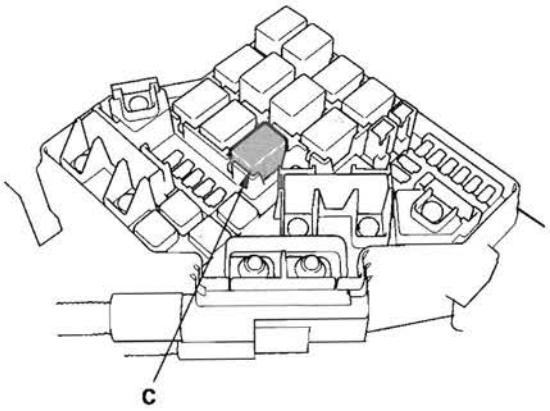

41. Check for continuity between body ground and PGM-FI main relay 1 4P connector terminals No. 1 and No. 3 individually.

PGM-FI MAIN RELAY 1 4P CONNECTOR

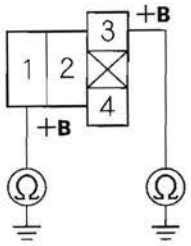

Terminal side of female terminals

Is there continuity?

YES—Replace the under-hood fuse/relay box (see page 22-63). Also replace the No. 19 FI MAIN (15 A) fuse.■

NO—Go to step 42.

42. Disconnect each of the components or connectors from these components, one at a time, and check for continuity between PGM-FI main relay 1 4P connector terminal No. 2 and body ground.

- PGM-FI main relay 2 (FUEL PUMP)
- PCM connector A (44P)
- Each injector 2P connector
- Camshaft position (CMP) sensor B 3P connector
- Crankshaft position (CKP) sensor 3P connector
- Electronic throttle control system (ETCS) control relay

PGM-FI MAIN RELAY 1 4P CONNECTOR

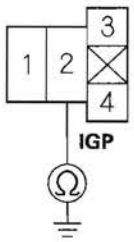

Terminal side of female terminals

Does continuity go away when one of the above components is disconnected?

YES—Replace the component that made the short to body ground go away when disconnected. If the item is the PCM, update the PCM if it does not have the latest software (see page 11-7), or substitute a known-good PCM (see page 11-8), then recheck. If the symptom/indication goes away with a known-good PCM, replace the original PCM (see page 11-219). Also replace the No. 19 FI MAIN (15 A) fuse. ■

NO—Go to step 43.

43. Disconnect the connectors from these components:

- PGM-FI main relay 2 (FUEL PUMP)
- PCM connector A (44P)
- Injectors
- Camshaft position (CMP) sensor B
- Crankshaft position (CKP) sensor
- Electronic throttle control system (ETCS) control relay

44. Check for continuity between PGM-FI main relay 1 4P connector terminal No. 2 and body ground.

PGM-FI MAIN RELAY 1 4P CONNECTOR

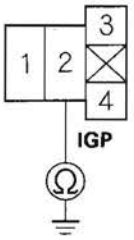

Terminal side of female terminals

Is there continuity?

YES—Repair short in the wire between PGM-FI main relay 1 and each item. Also replace the No. 19 FI MAIN (15 A) fuse. ■

NO—Replace PGM-FI main relay 1. Also replace the No. 19 FI MAIN (15 A) fuse. ■

45. Inspect the No. 2 FUEL PUMP (15 A) fuse in the under-dash fuse/relay box.

Is the fuse OK?

YES—Go to step 58.

NO—Go to step 46.

46. Remove the blown No. 2 FUEL PUMP (15 A) fuse in the under-dash fuse/relay box.

47. Jump the SCS line with the HDS.

48. Disconnect PCM connector C (44P).

(cont'd)

DLC Circuit Troubleshooting (cont'd)

49. Check for continuity between PCM connector terminal C36 and body ground.

PCM CONNECTOR C (44P)

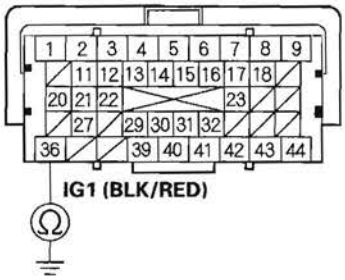

Terminal side of female terminals

Is there continuity?

YES—Go to step 50.

NO—Replace the No. 2 FUEL PUMP (15 A) fuse, and update the PCM if it does not have the latest software (see page 11-7), or substitute a known-good PCM (see page 11-8), then recheck. If the symptom/indication goes away with a known-good PCM, replace the original PCM (see page 11-219). ■

50. Remove PGM-FI main relay 2 (FUEL PUMP) (A) from the under-dash fuse/relay box.

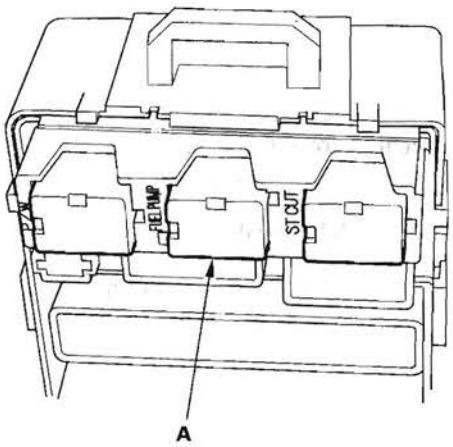

51. Check for continuity between PCM connector terminal C36 and body ground.

PCM CONNECTOR C (44P)

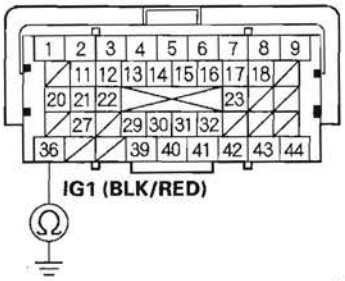

Terminal side of female terminals

Is there continuity?

YES—Repair short in the wire between the No. 2 FUEL PUMP (15 A) fuse and the PCM (C36), between the No. 2 FUEL PUMP (15 A) fuse and PGM-FI main relay 2 (FUEL PUMP), or between the No. 2 FUEL PUMP (15 A) fuse and the immobilizer control unit. Also replace the No. 2 FUEL PUMP (15 A) fuse. ■

NO—Go to step 52.

52. Fold the left side rear seat forward, and pull back the carpet to expose the access panel.

53. Remove the access panel from the floor.

54. Disconnect the fuel pump 4P connector.

55. Check for continuity between fuel pump 4P connector terminal No. 2 and body ground.

FUEL PUMP 4P CONNECTOR

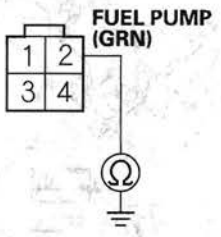

Wire side of female terminals

Is there continuity?

YES—Repair short in the wire between the fuel pump and PGM-FI main relay 2 (FUEL PUMP). Also replace the No. 2 FUEL PUMP (15 A) fuse. ■

NO—Go to step 56.

56. Reinstall PGM-FI main relay 2 (FUEL PUMP) (A).

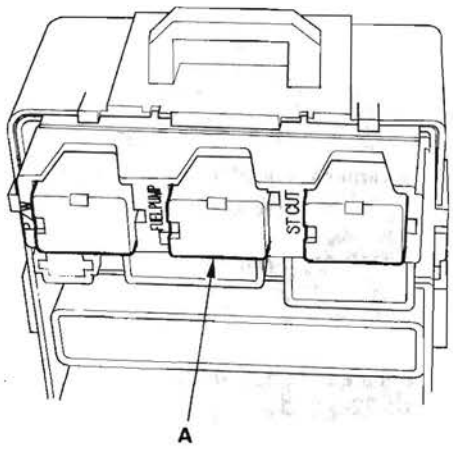

57. Check for continuity between fuel pump 4P connector terminal No. 2 and body ground.

FUEL PUMP 4P CONNECTOR

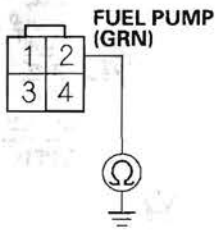

Wire side of female terminals

Is there continuity?

YES—Replace PGM-FI main relay 2 (FUEL PUMP). Also replace the No. 2 FUEL PUMP (15 A) fuse. ■

NO—Check the fuel pump, and replace it if necessary (see page 11-313). Also replace the No. 2 FUEL PUMP (15 A) fuse. ■

58. Jump the SCS line with the HDS.

59. Disconnect PCM connectors A (44P) and C (44P).

60. Turn the ignition switch ON (II).

(cont'd)

DLC Circuit Troubleshooting (cont'd)

61. Measure voltage between PCM connector terminal C36 and body ground.

PCM CONNECTOR C (44P)

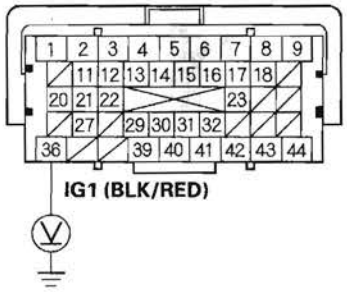

Terminal side of female terminals

Is there battery voltage?

YES—Go to step 62.

NO—Repair open in the wire between the No. 2 FUEL PUMP (15 A) fuse and the PCM (C36). ■

62. Measure voltage between PCM connector terminal A6 and body ground.

PCM CONNECTOR A (44P)

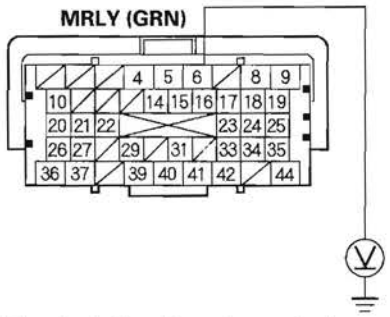

Terminal side of female terminals

Is there battery voltage?

YES—Go to step 67.

NO—Go to step 63.

63. Turn the ignition switch OFF.

64. Remove PGM-FI main relay 1 (C) from the under-hood fuse/relay box.

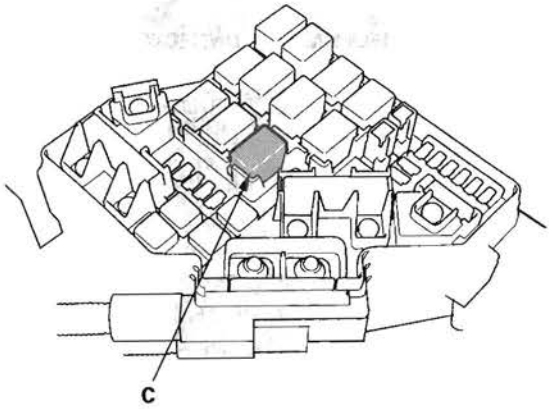

65. Measure voltage between PGM-FI main relay 1 4P connector terminal No. 3 and body ground.

PGM-FI MAIN RELAY 1 4P CONNECTOR

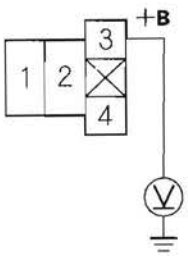

Terminal side of female terminals

Is there battery voltage?

YES—Go to step 66.

NO—Replace the under-hood fuse/relay box (see page 22-63). ■

66. Check for continuity between PGM-FI main relay 1 4P connector terminal No. 4 and PCM connector terminal A6.

PGM-FI MAIN RELAY 1 4P CONNECTOR

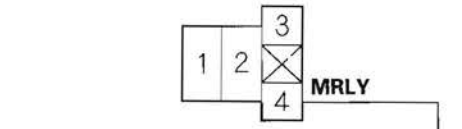

Terminal side of female terminals

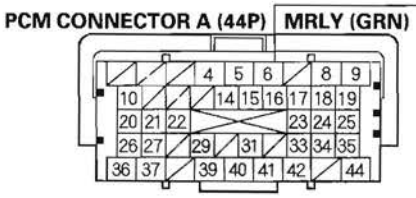

Terminal side of female terminals

Is there continuity?

YES—Test PGM-FI main relay 1 (see page 22-66). If the relay is OK, update the PCM if it does not have the latest software (see page 11-7), or substitute a known-good PCM (see page 11-8), then recheck. If the symptom/indication goes away with a known-good PCM, replace the original PCM (see page 11-219).■

NO—Repair open in the wire between the PCM (A6) and PGM-FI main relay 1.■

67. Turn the ignition switch OFF.

68. Remove PGM-FI main relay 1 (C) from the under-hood fuse/relay box.

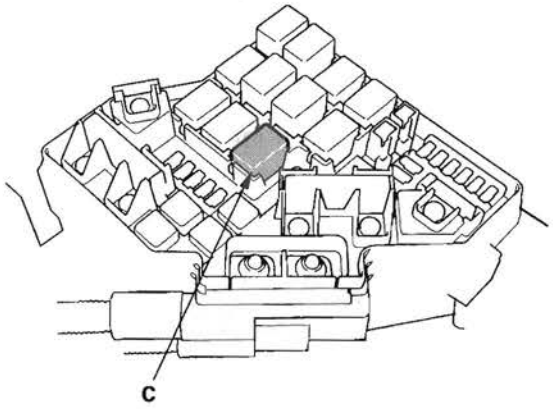

69. Measure voltage between PGM-FI main relay 1 4P connector terminal No. 1 and body ground.

PGM-FI MAIN RELAY 1 4P CONNECTOR

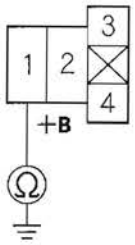

Terminal side of female terminals

Is there battery voltage?

YES—Go to step 70.

NO—Replace the under-hood fuse/relay box (see page 22-63).■

(cont'd)

DLC Circuit Troubleshooting (cont'd)

70. Check for continuity between PGM-FI main relay 1 4P connector terminal No. 2 and PCM connector terminal A8.

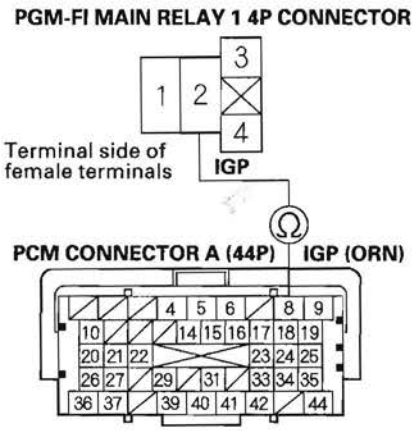

Terminal side of female terminals

Is there continuity?

YES—Go to step 71.

NO—Repair open in the wire between the PCM (A8) and PGM-FI main relay 1.■

71. Test PGM-FI main relay 1 (see page 22-66).

Is PGM-FI main relay 1 OK?

YES—Go to step 72.

NO—Replace PGM-FI main relay 1.■

72. Disconnect PCM connector B (44P).

73. Check for continuity between body ground and PCM connector terminals B1, B36, C2, C40, and C44 individually.

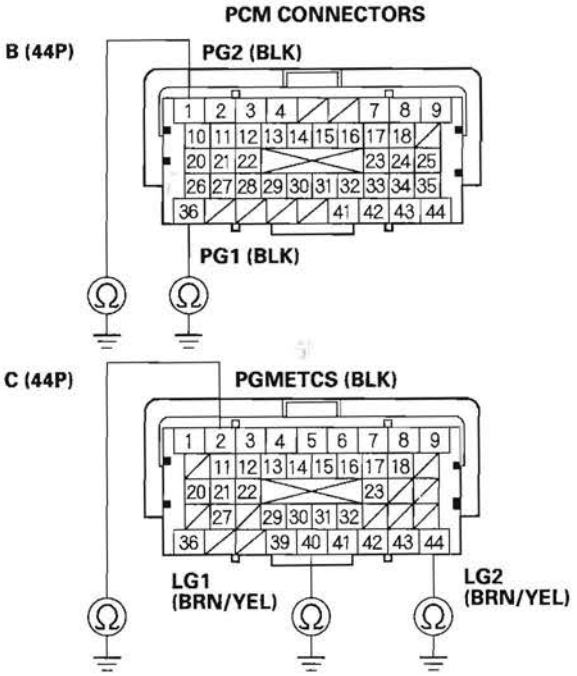

Terminal side of female terminals

Is there continuity?

YES—Go to step 74.

NO—Repair open in the wire between the PCM (B1, B36, C2, C40, C44) and G101 (see page 22-16).■

74. Check for continuity between PCM connector terminal C13 and body ground.

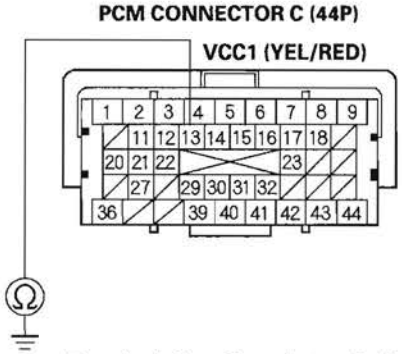

Terminal side of female terminals

Is there continuity?

YES—Go to step 75.

NO—Go to step 76.

75. Continue to check for continuity between PCM connector terminal C13 and body ground, while disconnecting these parts, one at a time:

- MAP sensor 3P connector
- Output shaft (countershaft) speed sensor 3P connector.

Does continuity go away when one of the above components is disconnected?

YES—Repair the part that caused an open when it was disconnected. ■

NO—Repair short in the between the PCM (C13) and the MAP sensor or the output shaft (countershaft) speed sensor. ■

76. Check for continuity between PCM connector terminal B18 and body ground.

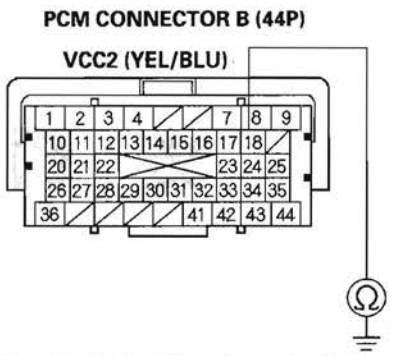

Terminal side of female terminals

Is there continuity?

YES—Go to step 77.

NO—Go to step 78.

77. Continue to check for continuity between PCM connector terminal B18 and body ground, while disconnecting these parts, one at a time:

- EGR valve 6P connector
- Input shaft (mainshaft) speed sensor 3P connector

Does continuity go away when one of the above components is disconnected?

YES—Repair the part that caused an open when it was disconnected. ■

NO—Repair short in the between the PCM (B18) and the EGR valve or the input shaft (mainshaft) speed sensor. ■

(cont'd)

DLC Circuit Troubleshooting (cont'd)

78. Check for continuity between PCM connector terminal C12 and body ground.

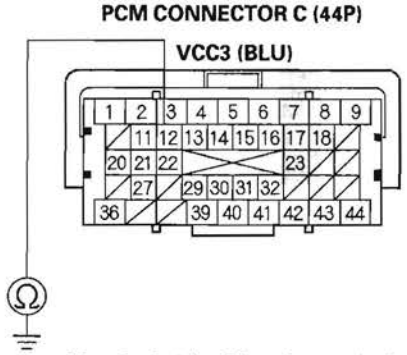

Terminal side of female terminals

Is there continuity?

YES—Go to step 79.

NO—Go to step 80.

79. Continue to check for continuity between PCM connector terminal C12 and body ground, while disconnecting the throttle body 6P connector.

Is there continuity?

YES—Repair short in the wire between the PCM (C12) and the throttle body. ■

NO—Replace the throttle body (see page 11-342). ■

80. Check for continuity between PCM connector terminal A25 and body ground.

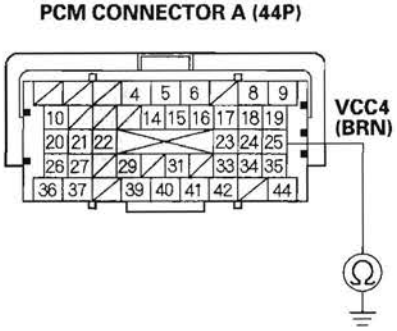

Terminal side of female terminals

Is there continuity?

YES—Go to step 81.

NO—Go to step 82.

81. Continue to check for continuity between PCM connector terminal A25 and body ground, while disconnecting the APP sensor 6P connector.

Is there continuity?

YES—Repair short in the wire between the PCM (A25) and APP sensor A. ■

NO—Replace the accelerator pedal module (see page 11-262). ■

82. Check for continuity between PCM connector terminal A24 and body ground.

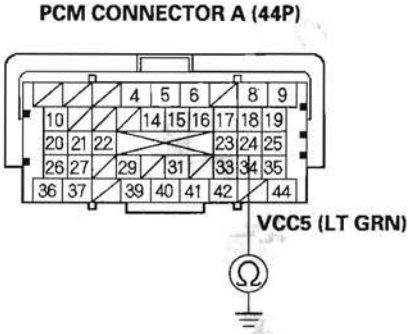

Terminal side of female terminals

Is there continuity?

YES—Go to step 83.

NO—Go to step 84.

83. Continue to check for continuity between PCM connector terminal A24 and body ground, while disconnecting the APP sensor 6P connector.

Is there continuity?

YES—Repair short in the wire between the PCM (A24) and APP sensor B. ■

NO—Replace the accelerator pedal module (see page 11-262). ■

84. Check for continuity between PCM connector terminal A19 and body ground.

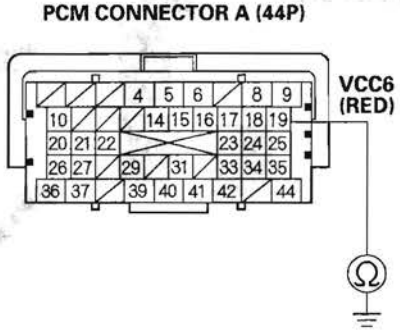

Terminal side of female terminals

Is there continuity?

YES—Go to step 85.

NO—Update the PCM if it does not have the latest software (see page 11-7), or substitute a known-good PCM (see page 11-8), then recheck. If the symptom/indication goes away with a known-good PCM, replace the original PCM (see page 11-219). ■

85. Continue to check for continuity between PCM connector terminal A19 and body ground, while disconnecting these parts, one at a time:

- A/C pressure sensor 3P connector
- FTP sensor 3P connector

Does continuity go away when one of the above components is disconnected?

YES—Replace the part that caused an open when it was disconnected. ■

NO—Repair short in the wire between the PCM (A19) and the A/C pressure sensor or the FTP sensor. ■

Injector Replacement

1. Relieve fuel pressure (see page 11-317).
2. Remove the engine cover.
3. Disconnect the connectors (A) from the injectors.

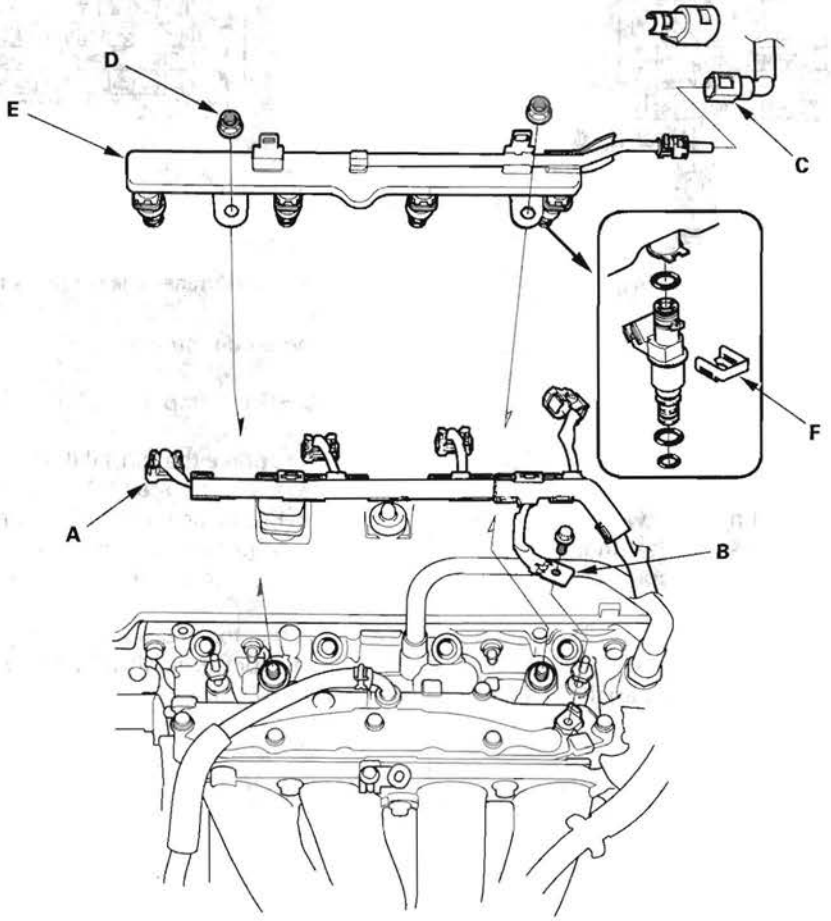

4. Remove the ground cable bolt (G101) (B).
5. Disconnect the quick-connect fitting (C).
6. Remove the fuel rail mounting nuts (D) from the fuel rail (E).
7. Remove the injector clip (F) from the injector.
8. Remove the injector from the fuel rail.

9. Coat the new O-rings (A) with clean engine oil, and insert the injectors (B) into the fuel rail (C).

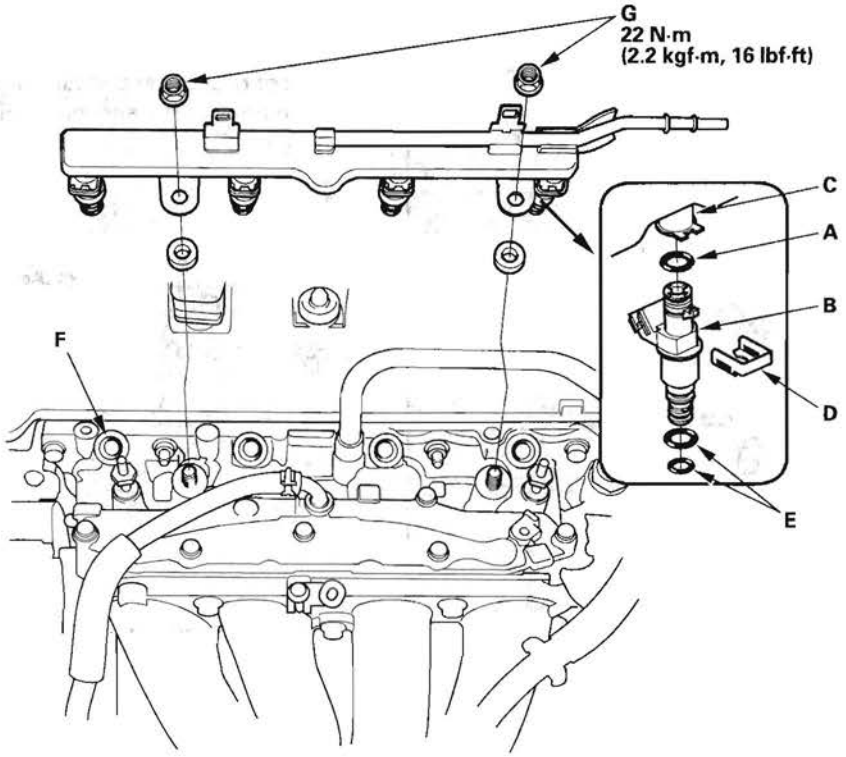

10. Install the injector clip (D).
11. Coat the injector O-rings (E) with clean engine oil.
12. Install the fuel rail and the injectors in the injector base (F).
13. Install the fuel rail mounting nuts (G) and the ground cable bolt (G101).
14. Connect the injector connectors.
15. Connect the quick-connect fitting.
16. Turn the ignition switch ON (II), but do not operate the starter. After the fuel pump runs for about 2 seconds, the fuel rail will be pressurized. Repeat this two or three times, then check for fuel leakage.

A/F Sensor Replacement

Special Tools Required
O2 sensor wrench, Snap-on S3176, or equivalent, commercially available

1. Disconnect the A/F sensor 4P connector (A), then remove the A/F sensor (B).

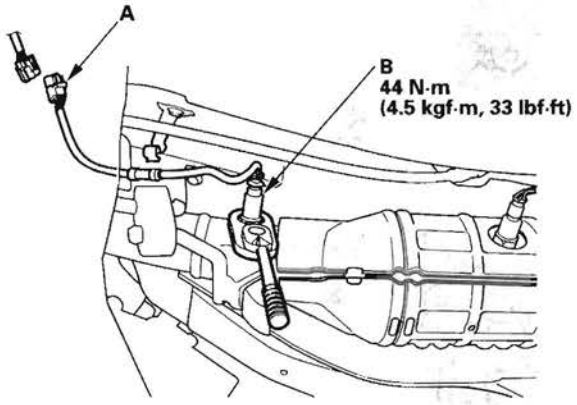

2. Install the parts in the reverse order of removal.

Secondary HO2S Replacement

Special Tools Required
O2 sensor wrench, Snap-on S3176, or equivalent, commercially available

1. Disconnect the secondary HO2S 4P connector (A), then remove the secondary HO2S (B).

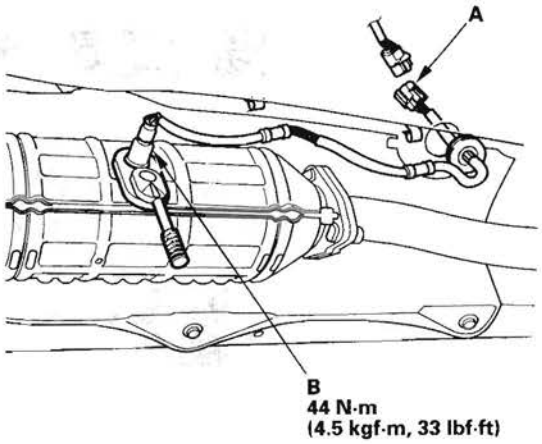

2. Install the parts in the reverse order of removal.

CMP Sensor B Replacement

1. Remove the EGR valve (see page 11-364).
2. Disconnect the CMP sensor B connector (A).

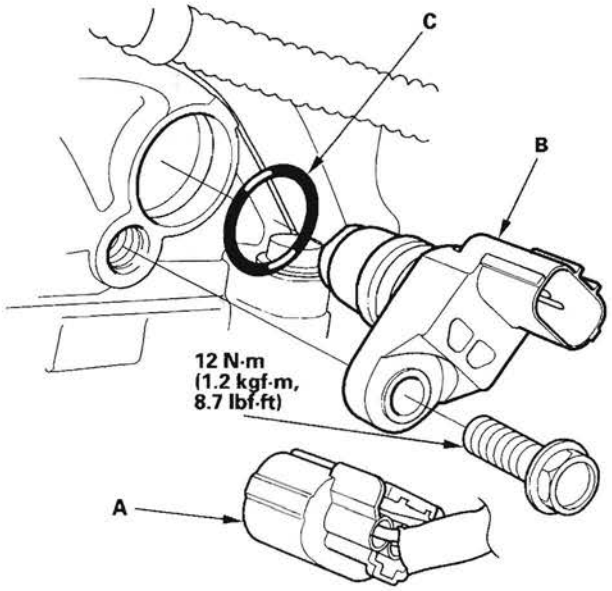

3. Remove CMP sensor B (B).
4. Install the parts in the reverse order of removal with a new O-ring (C).

CKP Sensor Replacement

1. Disconnect the CKP sensor connector (A).

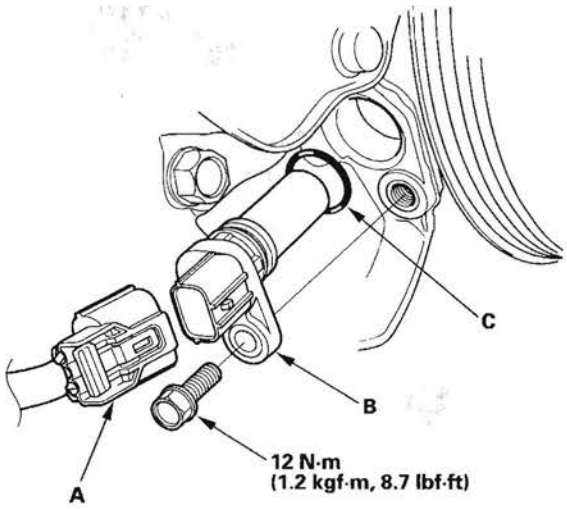

2. Remove the CKP sensor (B).
3. Install the parts in the reverse order of removal with a new O-ring (C).
4. Do the CKP pattern clear/CKP pattern learn procedure with the HDS (see page 11-4).

MAP Sensor Replacement

1. Disconnect the MAP sensor connector (A).

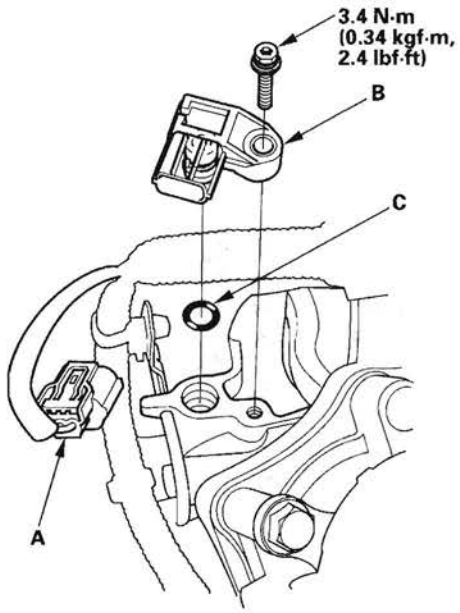

2. Remove the MAP sensor (B).
3. Install the parts in the reverse order of removal with a new O-ring (C).

MAF Sensor/IAT Sensor Replacement

1. Disconnect the MAF sensor/IAT sensor connector (A).

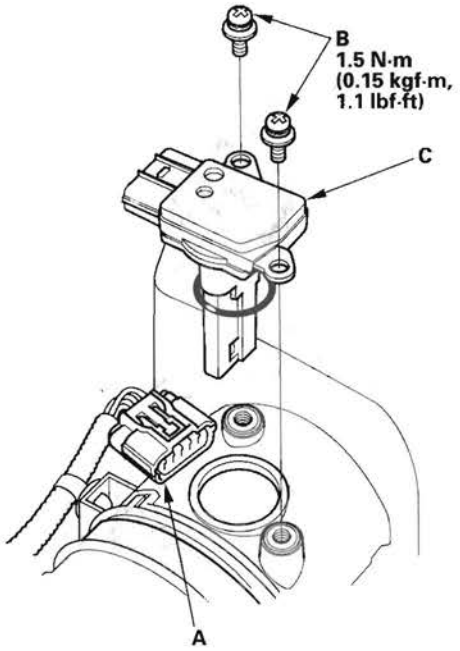

2. Remove the screws (B).
3. Remove the MAF sensor/IAT sensor (C).
4. Install the parts in the reverse order of removal with a new O-ring (D).

ECT Sensor 1 Replacement

1. Drain the engine coolant (see page 10-6).
2. Remove the air cleaner (see page 11-340).
3. Disconnect the ECT sensor 1 connector (A).

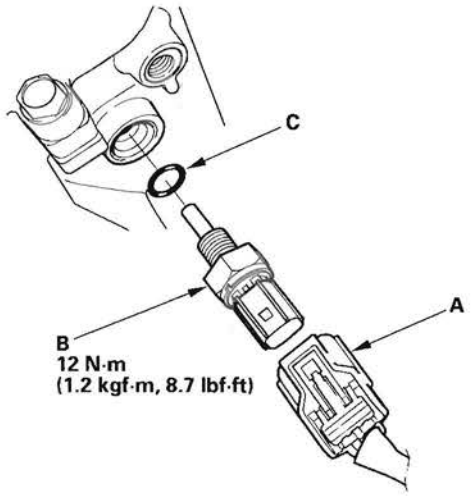

4. Remove ECT sensor 1 (B).
5. Install the parts in the reverse order of removal with a new O-ring (C), then refill the radiator with engine coolant (see page 10-6).

ECT Sensor 2 Replacement

1. Remove the splash shield.
2. Drain the engine coolant (see page 10-6).
3. Disconnect the ECT sensor 2 connector (A), then remove ECT sensor 2 (B).

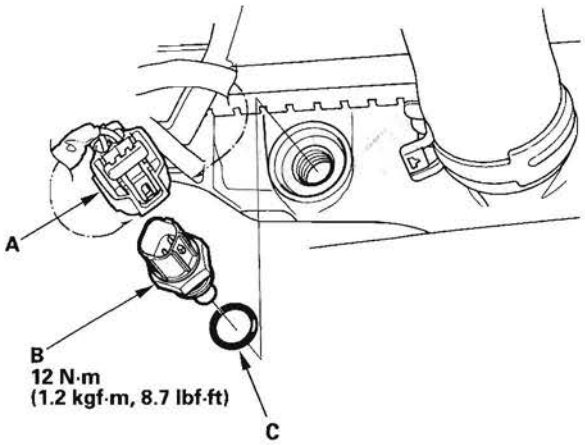

4. Install ECT sensor 2 with a new O-ring (C).
5. Install the splash shield.
6. Refill the radiator with engine coolant (see page 10-6).

Knock Sensor Replacement

1. Lift the vehicle, and support it with jackstands.
2. Disconnect the knock sensor connector (A).

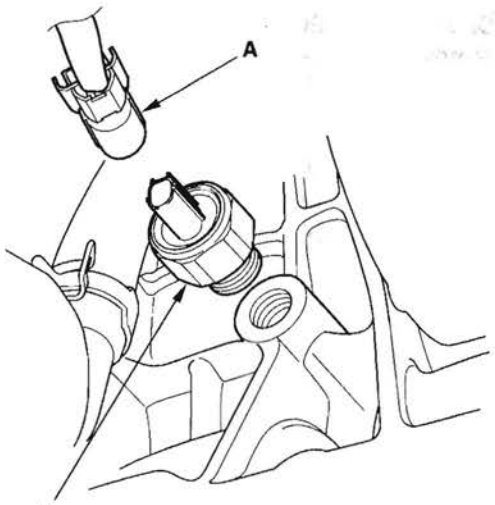

3. Remove the knock sensor (B).
4. Install the parts in the reverse order of removal.

PCM Replacement

NOTE:
- Make sure the HDS is loaded with the latest software version.
- If you are replacing the PCM after substituting a known-good PCM, reinstall the original PCM, then do this procedure.
- During the procedure, is any READ DATA, WRITE DATA, or other data checks fail, note the failure, then continue.

1. Connect the HDS to the data link connector (DLC) (A) located under the driver's side of the dashboard.

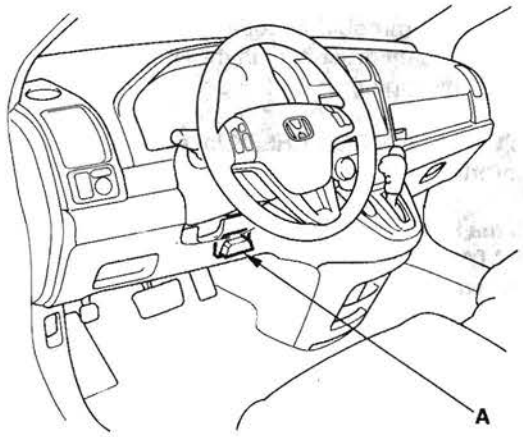

2. Turn the ignition switch ON (II).

3. Make sure the HDS communicates with the PCM. If it doesn't, go to the DLC circuit troubleshooting (see page 11-197). If you are returning from DLC circuit troubleshooting, skip steps 4 through 9, 19 through 25, and 28 through 30, and do the this after replacing the PCM;

   - Replace the engine oil (see page 8-10) and the engine oil filter (see page 8-11).
   - Replace the ATF (see page 14-239).
   - Clean the throttle body (see page 11-338).

4. Select the PGM-FI system with the HDS.

5. Select the INSPECTION MENU with the HDS.

6. Select the ETCS TEST, then select the TP POSITION CHECK, and follow the screen prompts.

   NOTE: If the TP POSITION CHECK indicates FAILED, continue with this procedure.

7. Select the REPLACE PCM MENU, then select READ DATA and follow the screen prompts.

   NOTE:
   - Doing this step copies (READS) the engine oil life data from the original PCM so you can later download (WRITES) it into the new PCM.
   - If READ DATA indicates FAILED, continue with this procedure.

8. Select the A/T system with the HDS.

9. Select the REPLACE TCM/PCM MENU, then select READ DATA and follow the screen prompts.

   NOTE:
   - Doing this step copies (READS) the ATF life data from the original PCM so you can later download (WRITES) it into the new PCM.
   - If READ DATA indicates FAILED, continue with this procedure.

10. Turn the ignition switch OFF.

11. Remove the under-hood fuse/relay box (A).

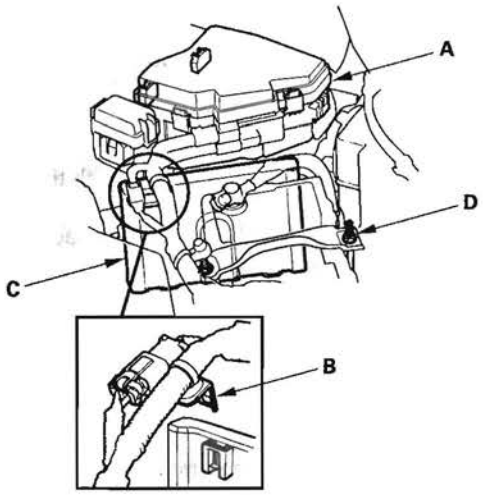

12. Remove the harness bracket (B).

13. Loosen the battery hold down belt (D) and re-position the battery away from the PCM.

14. Remove the PCM cover (C).

(cont'd)

PCM Replacement (cont'd)

15. Remove the bolts (D), then remove the PCM (E).

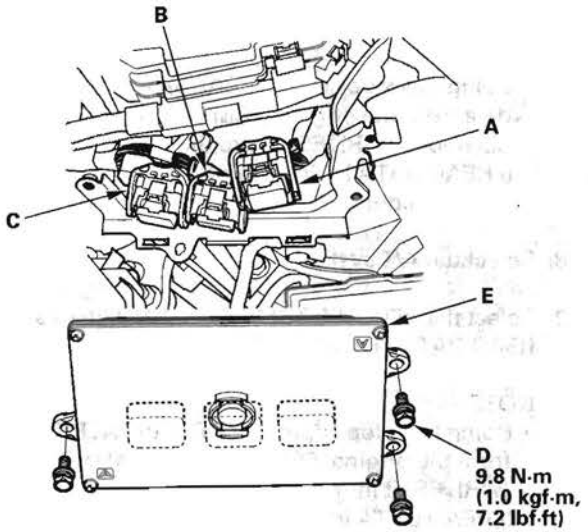

16. Disconnect the PCM connectors A, B, and C.

    NOTE: The PCM connectors A, B, and C have symbols (A=□, B=△, C=○) embossed on them for identification.

17. Install the parts in the reverse order of removal.

18. Turn the ignition switch ON (II).

19. Manually input the VIN to the PCM with the HDS.

    NOTE: DTC P0630 "VIN Not Programmed or Mismatch" may be stored because the VIN has not been programmed into the PCM; ignore it, and continue this procedure.

20. If the READ DATA (engine oil life) failed in step 8, go to step 23. Otherwise, go to step 21.

21. Select the PGM-FI system with the HDS.

22. Select the REPLACE PCM MENU, then WRITE DATA and follow the screen prompts.

    NOTE: If the WRITE DATA indicates FAILED, continue with this procedure.

23. If the READ DATA (ATF life) failed in step 10, go to step 25. Otherwise go to step 24.

24. Select the A/T SYSTEM with the HDS.

25. Select the REPLACE TCM/PCM MENU, then WRITE DATA and follow the screen prompts.

    NOTE: If the WRITE DATA indicates FAILED, continue with this procedure.

26. Select IMMOBI system with the HDS.

27. Enter the immobilizer code with the PCM replacement procedure in the HDS; it allows you to start the engine.

28. If the TP POSITION CHECK failed in step 6 clean the throttle body (see page 11-338), then go to step 29.

29. If the READ DATA failed in step 7 or the WRITE DATA failed in step 22, replace the engine oil (see page 8-10) and engine oil filter (see page 8-11), then go to step 30.

30. If the READ DATA failed in step 10 or the WRITE DATA failed in step 25, replace the ATF (see page 14-239), then go to step 31.

31. Select PGM-FI system and reset the PCM with the HDS.

32. Update the PCM if it does not have the latest software (see page 11-7).

33. Do the PCM idle learn procedure (see page 11-304).

34. Do the CKP pattern learn procedure (see page 11-4).

Component Location Index

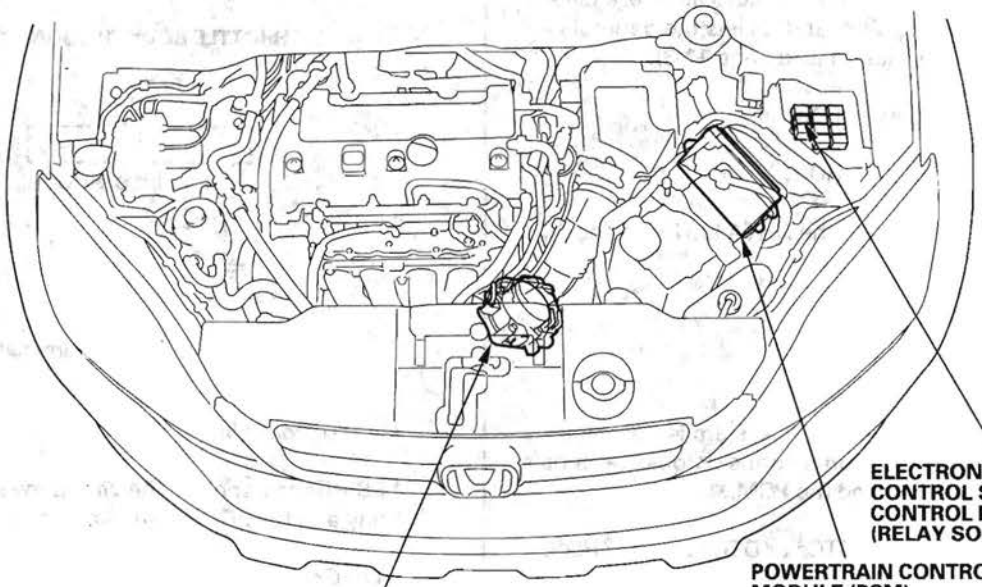

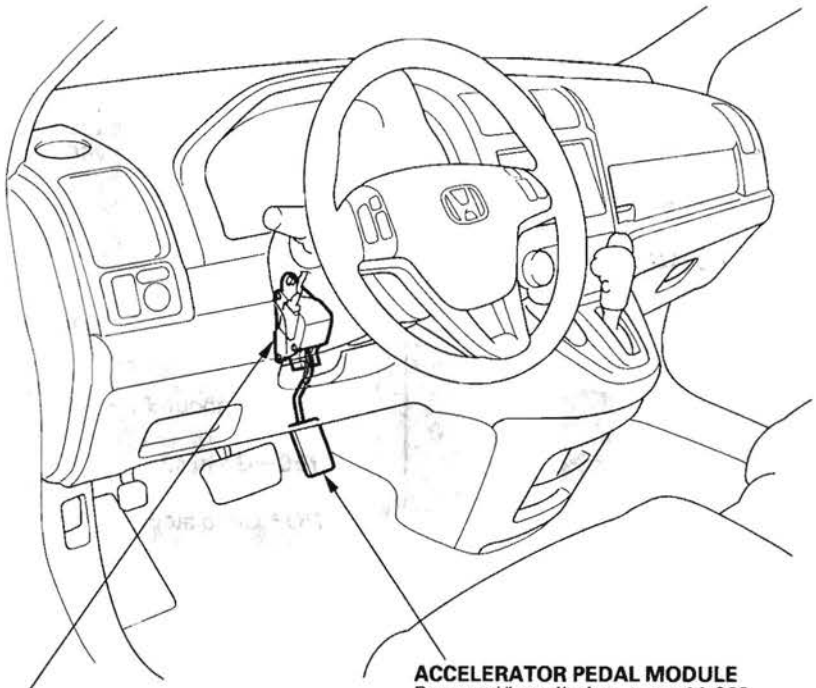

DTC Troubleshooting

DTC P0122: TP Sensor A Circuit Low Voltage

NOTE: Before you troubleshoot, record all freeze data and any on-board snapshot, and review the general troubleshooting information (see page 11-3).

1. Turn the ignition switch ON (II).
2. Clear the DTC with the HDS.
3. Check TP SENSOR A in the DATA LIST with the HDS.

   Is there about 0.3 V or less?

   YES—Go to step 4.

   NO—Intermittent failure, the system is OK at this time. Check for poor connections or loose terminals at the throttle body and the PCM. ■
4. Check for Temporary DTCs or DTCs with the HDS.

   Are DTC P0122 and P0222 indicated at the same time?

   YES—Go to step 10.

   NO—Go to step 5.
5. Turn the ignition switch OFF.
6. Disconnect the throttle body 6P connector.
7. Jump the SCS line with the HDS.
8. Disconnect PCM connector C (44P).
9. Check for continuity between throttle body 6P connector terminal No. 1 and body ground.

   THROTTLE BODY 6P CONNECTOR

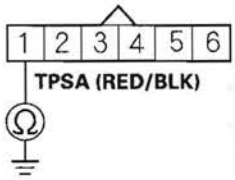

   Wire side of female terminals

   Is there continuity?

   YES—Repair short in the wire between the throttle body and the PCM (C20), then go to step 18.

   NO—Go to step 23.
10. Measure voltage between throttle body 6P connector terminal No. 2 and body ground.

    THROTTLE BODY 6P CONNECTOR

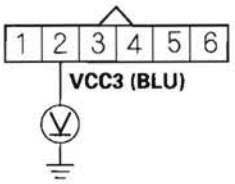

    Wire side of female terminals

    Is there about 5 V?

    YES—Go to step 16.

    NO—Go to step 11.

11. Turn the ignition switch OFF.
12. Jump the SCS line with the HDS.
13. Disconnect PCM connector C (44P).
14. Disconnect the throttle body 6P connector.
15. Check for continuity between PCM connector terminal C12 and throttle body 6P connector terminal No. 2.

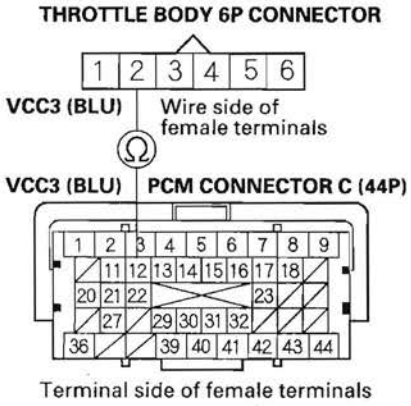

Is there continuity?

YES—Go to step 23.

NO—Repair open in the wire between the throttle body and the PCM (C12), then go to step 18.

16. Turn the ignition switch OFF.
17. Replace the throttle body (see page 11-342).
18. Reconnect all connectors.
19. Turn the ignition switch ON (II).
20. Reset the PCM with the HDS.
21. Do the PCM idle learn procedure (see page 11-304).
22. Check for Temporary DTCs or DTCs with the HDS.

Is DTC P0122 indicated?

YES—Check for poor connections or loose terminals at the throttle body and the PCM, then go to step 1.

NO—Troubleshooting is complete. If any other Temporary DTCs or DTCs are indicated, go to the indicated DTC's troubleshooting. ■

23. Reconnect all connectors.
24. Update the PCM if it does not have the latest software (see page 11-7), or substitute a known-good PCM (see page 11-8).
25. Check for Temporary DTCs or DTCs with the HDS.

Is DTC P0122 indicated?

YES—Check for poor connections or loose terminals at the throttle body and the PCM. If the PCM was updated, substitute a known-good PCM (see page 11-8), then recheck. If the PCM was substituted, go to step 1.

NO—If the PCM was updated, troubleshooting is complete. If the PCM was substituted, replace the original PCM (see page 11-219). If any other Temporary DTCs or DTCs are indicated, go to the indicated DTC's troubleshooting. ■

DTC Troubleshooting (cont'd)

DTC P0123: TP Sensor A Circuit High Voltage

NOTE: Before you troubleshoot, record all freeze data and any on-board snapshot, and review the general troubleshooting information (see page 11-3).

1. Turn the ignition switch ON (II).
2. Clear the DTC with the HDS.
3. Check TP SENSOR A in the DATA LIST with the HDS.

   Is there about 4.8 V or more?

   YES—Go to step 4.

   NO—Intermittent failure, the system is OK at this time. Check for poor connections or loose terminals at the throttle body and the PCM. ■
4. Check for Temporary DTCs or DTCs with the HDS.

   Are DTC P0123 and P0223 indicated at the same time?

   YES—Go to step 13.

   NO—Go to step 5.
5. Turn the ignition switch OFF.
6. Disconnect the throttle body 6P connector.
7. Turn the ignition switch ON (II).
8. Measure voltage between throttle body 6P connector terminal No. 1 and body ground.

THROTTLE BODY 6P CONNECTOR

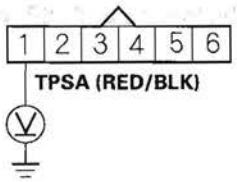

Wire side of female terminals

   Is there about 5 V?

   YES—Go to step 18.

   NO—Go to step 9.
9. Turn the ignition switch OFF.
10. Jump the SCS line with the HDS.
11. Disconnect PCM connector C (44P).

12. Check for continuity between PCM connector terminal C20 and throttle body 6P connector terminal No. 1.

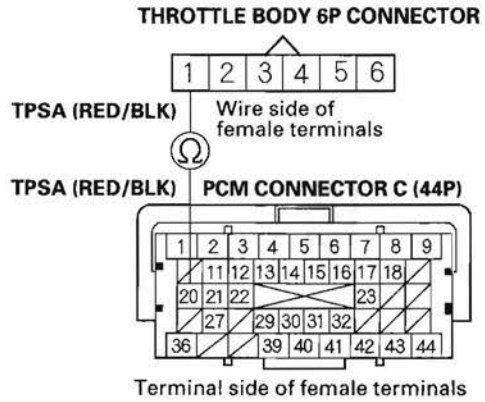

Is there continuity?

YES—Go to step 25.

NO—Repair open in the wire between the throttle body and the PCM (C20), then go to step 20.

13. Turn the ignition switch OFF.
14. Disconnect the throttle body 6P connector.
15. Jump the SCS line with the HDS.
16. Disconnect PCM connector C (44P).

17. Check for continuity between PCM connector terminal C39 and throttle body 6P connector terminal No. 4.

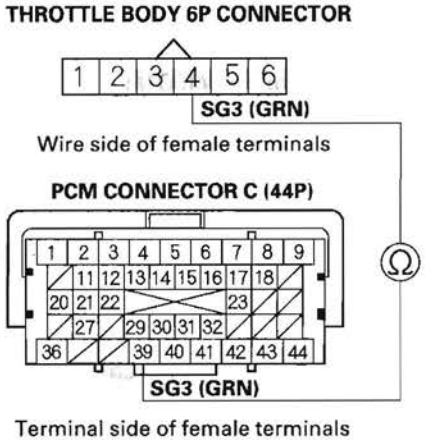

Is there continuity?

YES—Go to step 25.

NO—Repair open in the wire between the throttle body and the PCM (C39), then go to step 20.

(cont'd)

DTC Troubleshooting (cont'd)

18. Turn the ignition switch OFF.
19. Replace the throttle body (see page 11-342).
20. Reconnect all connectors.
21. Turn the ignition switch ON (II).
22. Reset the PCM with the HDS.
23. Do the PCM idle learn procedure (see page 11-304).
24. Check for Temporary DTCs or DTCs with the HDS.

    Is DTC P0123 indicated?

    YES—Check for poor connections or loose terminals at the throttle body and the PCM, then go to step 1.

    NO—Troubleshooting is complete. If any other Temporary DTCs or DTCs are indicated, go to the indicated DTC's troubleshooting. ■
25. Reconnect all connectors.
26. Update the PCM if it does not have the latest software (see page 11-7), or substitute a known-good PCM (see page 11-8).
27. Check for Temporary DTCs or DTCs with the HDS.

    Is DTC P0123 indicated?

    YES—Check for poor connections or loose terminals at the throttle body and the PCM. If the PCM was updated, substitute a known-good PCM (see page 11-8), then recheck. If the PCM was substituted, go to step 1.

    NO—If the PCM was updated, troubleshooting is complete. If the PCM was substituted, replace the original PCM (see page 11-219). If any other Temporary DTCs or DTCs are indicated, go to the indicated DTC's troubleshooting. ■

DTC P0222: TP Sensor B Circuit Low Voltage

NOTE: Before you troubleshoot, record all freeze data and any on-board snapshot, and review the general troubleshooting information (see page 11-3).

1. Turn the ignition switch ON (II).
2. Clear the DTC with the HDS.
3. Check TP SENSOR B in the DATA LIST with the HDS.

   Is there about 0.3 V or less?

   YES—Go to step 4.

   NO—Intermittent failure, the system is OK at this time. Check for poor connections or loose terminals at the throttle body and the PCM. ■
4. Check for Temporary DTCs or DTCs with the HDS.

   Are DTC P0122 and P0222 indicated at the same time?

   YES—Go to step 10.

   NO—Go to step 5.
5. Turn the ignition switch OFF.
6. Disconnect the throttle body 6P connector.
7. Jump the SCS line with the HDS.
8. Disconnect PCM connector C (44P).
9. Check for continuity between throttle body 6P connector terminal No. 3 and body ground.

THROTTLE BODY 6P CONNECTOR

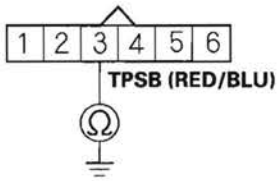

Wire side of female terminals

Is there continuity?

YES—Repair short in the wire between the throttle body and the PCM (C21), then go to step 18.

NO—Go to step 23.

(cont'd)

DTC Troubleshooting (cont'd)

10. Measure voltage between throttle body 6P connector terminal No. 2 and body ground.

THROTTLE BODY 6P CONNECTOR

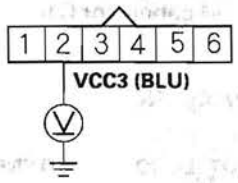

Wire side of female terminals

Is there about 5 V?

YES—Go to step 16.

NO—Go to step 11.

11. Turn the ignition switch OFF.
12. Jump the SCS line with the HDS.
13. Disconnect PCM connector C (44P).
14. Disconnect the throttle body 6P connector.
15. Check for continuity between PCM connector terminal C12 and throttle body 6P connector terminal No. 2.

THROTTLE BODY 6P CONNECTOR

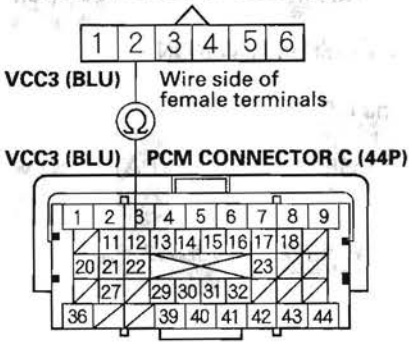

Terminal side of female terminals

Is there continuity?

YES—Go to step 23.

NO—Repair open in the wire between the throttle body and the PCM (C12), then go to step 18.

16. Turn the ignition switch OFF.
17. Replace the throttle body (see page 11-342).
18. Reconnect all connectors.
19. Turn the ignition switch ON (II).
20. Reset the PCM with the HDS.
21. Do the PCM idle learn procedure (see page 11-304).
22. Check for Temporary DTCs or DTCs with the HDS.

    Is DTC P0222 indicated?

    YES—Check for poor connections or loose terminals at the throttle body and the PCM, then go to step 1.

    NO—Troubleshooting is complete. If any other Temporary DTCs or DTCs are indicated, go to the indicated DTC's troubleshooting. ■
23. Reconnect all connectors.
24. Update the PCM if it does not have the latest software (see page 11-7), or substitute a known-good PCM (see page 11-8).
25. Check for Temporary DTCs or DTCs with the HDS.

    Is DTC P0222 indicated?

    YES—Check for poor connections or loose terminals at the throttle body and the PCM. If the PCM was updated, substitute a known-good PCM (see page 11-8), then recheck. If the PCM was substituted, go to step 1.

    NO—If the PCM was updated, troubleshooting is complete. If the PCM was substituted, replace the original PCM (see page 11-219). If any other Temporary DTCs or DTCs are indicated, go to the indicated DTC's troubleshooting. ■

DTC Troubleshooting (cont'd)

DTC P0223: TP Sensor B Circuit High Voltage

NOTE: Before you troubleshoot, record all freeze data and any on-board snapshot, and review the general troubleshooting information (see page 11-3).

1. Turn the ignition switch ON (II).
2. Clear the DTC with the HDS.
3. Check TP SENSOR B in the DATA LIST with the HDS.

   Is there about 4.8 V or more?

   YES—Go to step 4.

   NO—Intermittent failure, the system is OK at this time. Check for poor connections or loose terminals at the throttle body and the PCM. ■
4. Check for Temporary DTCs or DTCs with the HDS.

   Are DTC P0123 and P0223 indicated at the same time?

   YES—Go to step 13.

   NO—Go to step 5.
5. Turn the ignition switch OFF.
6. Disconnect the throttle body 6P connector.
7. Turn the ignition switch ON (II).
8. Measure voltage between throttle body 6P connector terminal No. 3 and body ground.

THROTTLE BODY 6P CONNECTOR

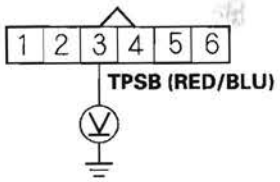

Wire side of female terminals

Is there about 5 V?

YES—Go to step 18.

NO—Go to step 9.

9. Turn the ignition switch OFF.
10. Jump the SCS line with the HDS.
11. Disconnect PCM connector C (44P).

12. Check for continuity between PCM connector terminal C21 and throttle body 6P connector terminal No. 3.

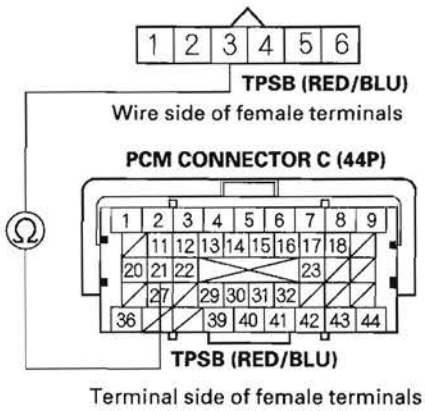

Is there continuity?

YES—Go to step 25.

NO—Repair open in the wire between the throttle body and the PCM (C21), then go to step 20.

13. Turn the ignition switch OFF.
14. Disconnect the throttle body 6P connector.
15. Jump the SCS line with the HDS.
16. Disconnect PCM connector C (44P).

17. Check for continuity between PCM connector terminal C39 and throttle body 6P connector terminal No. 4.

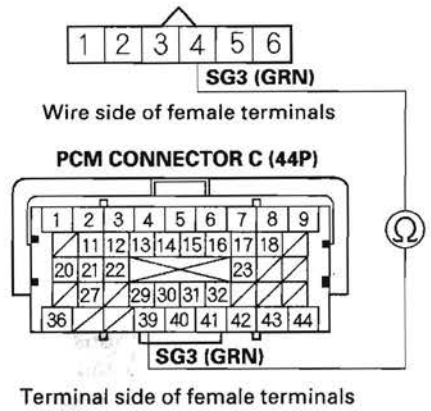

Is there continuity?

YES—Go to step 25.

NO—Repair open in the wire between the throttle body and the PCM (C39), then go to step 20.

(cont'd)

DTC Troubleshooting (cont'd)

18. Turn the ignition switch OFF.
19. Replace the throttle body (see page 11-342).
20. Reconnect all connectors.
21. Turn the ignition switch ON (II).
22. Reset the PCM with the HDS.
23. Do the PCM idle learn procedure (see page 11-304).
24. Check for Temporary DTCs or DTCs with the HDS.

    Is DTC P0223 indicated?

    YES—Check for poor connections or loose terminals at the throttle body and the PCM, then go to step 1.

    NO—Troubleshooting is complete. If any other Temporary DTCs or DTCs are indicated, go to the indicated DTC's troubleshooting.■
25. Reconnect all connectors.
26. Update the PCM if it does not have the latest software (see page 11-7), or substitute a known-good PCM (see page 11-8).
27. Check for Temporary DTCs or DTCs with the HDS.

    Is DTC P0223 indicated?

    YES—Check for poor connections or loose terminals at the throttle body and the PCM. If the PCM was updated, substitute a known-good PCM (see page 11-8), then recheck. If the PCM was substituted, go to step 1.

    NO—If the PCM was updated, troubleshooting is complete. If the PCM was substituted, replace the original PCM (see page 11-219). If any other Temporary DTCs or DTCs are indicated, go to the indicated DTC's troubleshooting.■

DTC P1658: ETCS Control Relay ON Malfunction

NOTE: Before you troubleshoot, record all freeze data and any on-board snapshot, and review the general troubleshooting information (see page 11-3).

1. Turn the ignition switch ON (II).
2. Do the ETCS TEST in the INSPECTION MENU with the HDS.

   Is the RELAY circuit OK?

   YES—Intermittent failure, the system is OK at this time. Check for poor connections or loose terminals at the ETCS control relay and the PCM. ■

   NO—Go to step 3.
3. Turn the ignition switch OFF.
4. Remove the ETCS control relay (F) from the under-hood fuse/relay box.

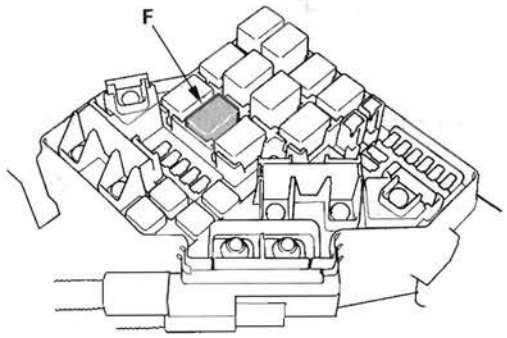

5. Test the ETCS control relay (see page 22-66).

   Is the ETCS control relay OK?

   YES—Go to step 6.

   NO—Replace the ETCS control relay, then go to step 13.
6. Jump the SCS line with the HDS.
7. Disconnect PCM connector A (44P).
8. Check for continuity between PCM connector terminal A20 and body ground.

PCM CONNECTOR A (44P)

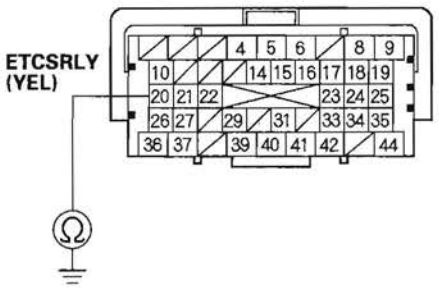

Terminal side of female terminals

Is there continuity?

YES—Repair short in the wire between the PCM (A20) and the ETCS control relay, then go to step 13.

NO—Go to step 9.

(cont'd)

DTC Troubleshooting (cont'd)

9. Disconnect PCM connector C (44P).
10. Turn the ignition switch ON (II).
11. Measure voltage between PCM connector terminal C1 and body ground.

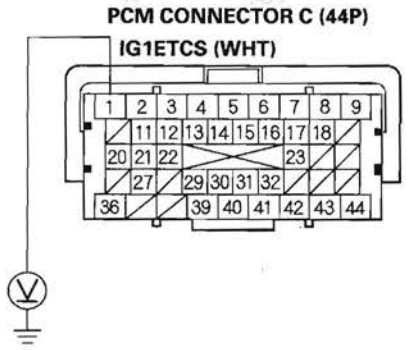

Terminal side of female terminals

Is there battery voltage?

YES—Repair short to power in the wire between the PCM (C1) and the ETCS control relay, then go to step 12.

NO—Go to step 18.

12. Turn the ignition switch OFF.
13. Reconnect all connectors.
14. Turn the ignition switch ON (II).
15. Reset the PCM with the HDS.
16. Do the PCM idle learn procedure (see page 11-304).
17. Check for Temporary DTCs or DTCs with the HDS.

Is DTC P1658 indicated?

YES—Check for poor connections or loose terminals at the ETCS control relay and the PCM, then go to step 1.

NO—Troubleshooting is complete. If any other Temporary DTCs or DTCs are indicated, go to the indicated DTC's troubleshooting. ■

18. Reconnect all connectors.
19. Update the PCM if it does not have the latest software (see page 11-7), or substitute a known-good PCM (see page 11-8).
20. Check for Temporary DTCs or DTCs with the HDS.

Is DTC P1658 indicated?

YES—Check for poor connections or loose terminals at the ETCS control relay and the PCM. If the PCM was updated, substitute a known-good PCM (see page 11-8), then recheck. If the PCM was substituted, go to step 1.

NO—If the PCM was updated, troubleshooting is complete. If the PCM was substituted, replace the original PCM (see page 11-219). If any other Temporary DTCs or DTCs are indicated, go to the indicated DTC's troubleshooting. ■

DTC P1659: ETCS Control Relay OFF Malfunction

NOTE: Before you troubleshoot, record all freeze data and any on-board snapshot, and review the general troubleshooting information (see page 11-3).

1. Turn the ignition switch ON (II).
2. Clear the DTC with the HDS.
3. Check for Temporary DTCs or DTCs with the HDS.

   Is DTC P1659 indicated?

   YES—Go to step 4.

   NO—Intermittent failure, the system is OK at this time. Check for poor connections or loose terminals at the ETCS control relay and the PCM. ■
4. Turn the ignition switch OFF.
5. Check the No. 21 DBW (THROTTLE ACTUATOR CONTROL) (15 A) fuse in the under-hood fuse/relay box.

   Is the fuse OK?

   YES—Go to step 6.

   NO—Go to step 17.
6. Remove the ETCS control relay (F) from the under-hood fuse/relay box.

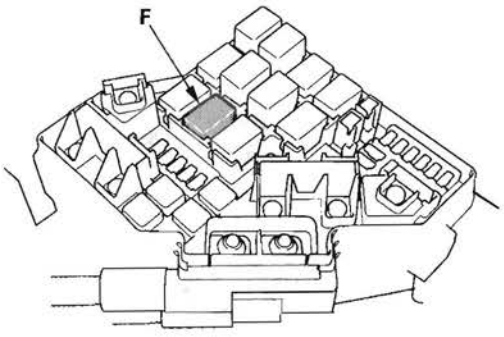

7. Test the ETCS control relay (see page 22-66).

   Is the ETCS control relay OK?

   YES—Go to step 8.

   NO—Replace the ETCS control relay, then go to step 23.
8. Turn the ignition switch ON (II).
9. Measure voltage between ETCS control relay 4P connector terminal No. 1 and body ground.

ETCS CONTROL RELAY 4P CONNECTOR

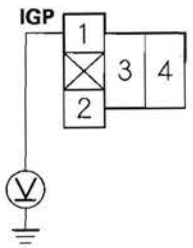

Terminal side of female terminals

Is there battery voltage?

YES—Go to step 10.

NO—Replace the under-hood fuse/relay box (see page 22-63), then go to step 22.

(cont'd)

DTC Troubleshooting (cont'd)

10. Measure voltage between ETCS control relay 4P connector terminal No. 4 and body ground.

ETCS CONTROL RELAY 4P CONNECTOR

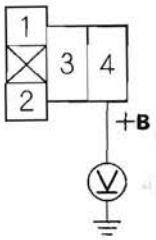

Terminal side of female terminals

Is there battery voltage?

YES—Go to step 11.

NO—Replace the under-hood fuse/relay box (see page 22-63), then go to step 22.

11. Turn the ignition switch OFF.
12. Jump the SCS line with the HDS.
13. Disconnect PCM connector C (44P).
14. Check for continuity between ETCS control relay 4P connector terminal No. 3 and PCM connector terminal C1.

ETCS CONTROL RELAY 4P CONNECTOR

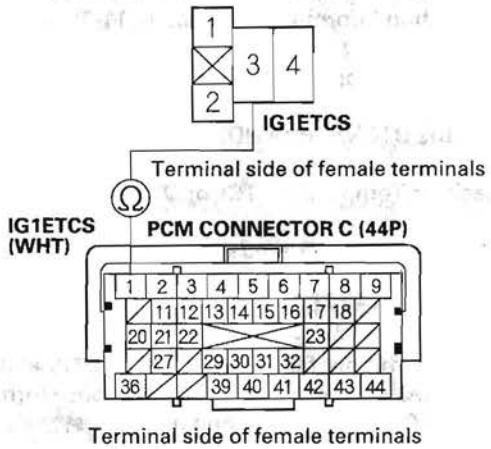

Terminal side of female terminals

Is there continuity?

YES—Go to step 15.

NO—Repair open in the wire between the PCM (C1) and the ETCS control relay, then go to step 23.

15. Disconnect PCM connector A (44P).

16. Check for continuity between ETCS control relay 4P connector terminal No. 2 and PCM connector terminal A20.

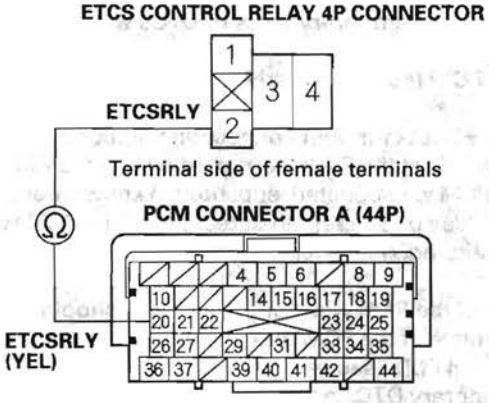

Is there continuity?

YES—Go to step 28.

NO—Repair open in the wire between the PCM (A20) and the ETCS control relay, then go to step 23.

17. Remove the ETCS control relay (F) from the under-hood fuse/relay box.

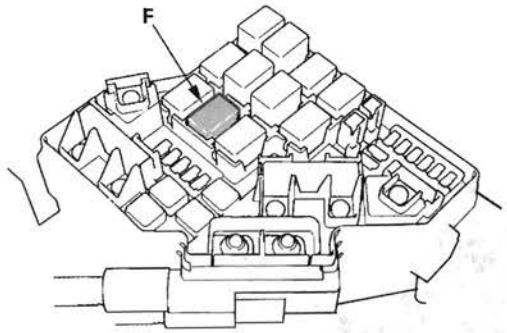

18. Jump the SCS line with the HDS.

19. Disconnect PCM connector C (44P).

20. Check for continuity between PCM connector terminal C1 and body ground.

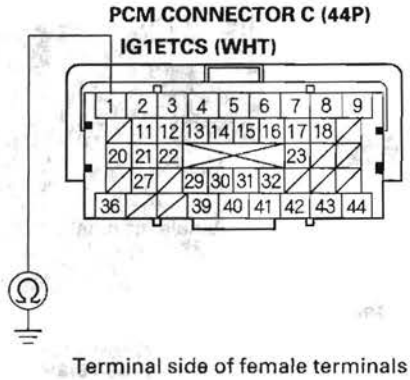

Is there continuity?

YES—Repair short in the wire between the PCM (C1) and the ETCS control relay, then go to step 23.

NO—Go to step 21.

(cont'd)

DTC Troubleshooting (cont'd)

21. Check for continuity between ETCS control relay 4P connector terminal No. 4 and body ground.

ETCS CONTROL RELAY 4P CONNECTOR

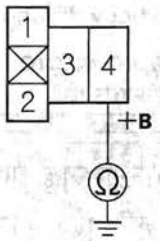

Terminal side of female terminals

Is there continuity?

YES—Replace the under-hood fuse/relay box (see page 22-63), then go to step 23.

NO—Go to step 28.

22. Turn the ignition switch OFF.
23. Reconnect all connectors.
24. Turn the ignition switch ON (II).
25. Reset the PCM with the HDS.
26. Do the PCM idle learn procedure (see page 11-304).
27. Check for Temporary DTCs or DTCs with the HDS.

Is DTC P1659 indicated?

YES—Check for poor connections or loose terminals at the ETCS control relay and the PCM, then go to step 1.

NO—Troubleshooting is complete. If any other Temporary DTCs or DTCs are indicated, go to the indicated DTC's troubleshooting.■

28. Reconnect all connectors.
29. Update the PCM if it does not have the latest software (see page 11-7), or substitute a known-good PCM (see page 11-8).
30. Check for Temporary DTCs or DTCs with the HDS.

Is DTC P1659 indicated?

YES—Check for poor connections or loose terminals at the ETCS control relay and the PCM. If the PCM was updated, substitute a known-good PCM (see page 11-8), then recheck. If the PCM was substituted, go to step 1.

NO—If the PCM was updated, troubleshooting is complete. If the PCM was substituted, replace the original PCM (see page 11-219). If any other Temporary DTCs or DTCs are indicated, go to the indicated DTC's troubleshooting.■

DTC P1683: Throttle Valve Default Position Spring Performance Problem

⚠CAUTION

Do not insert your fingers into the installed throttle body when you turn the ignition switch ON (II) or while the ignition switch is ON (II). If you do, you will seriously injure your fingers if the throttle valve is activated.

NOTE: Before you troubleshoot, record all freeze data and any on-board snapshot, and review the general troubleshooting information (see page 11-3).

1. Turn the ignition switch ON (II).
2. Clear the DTC with the HDS.
3. Start the engine. Hold the engine speed at 3,000 rpm without load (in Park or neutral) until the radiator fan comes on, then let it idle.
4. Turn the ignition switch OFF, and wait 10 seconds.
5. Turn the ignition switch ON (II).
6. Check for Temporary DTCs or DTCs with the HDS.

   Is DTC P1683 indicated?

   YES—Go to step 7.

   NO—Intermittent failure, the system is OK at this time. Check for poor connections or loose terminals at the throttle body and the PCM. ■
7. Turn the ignition switch OFF.
8. Disconnect the air intake duct from the throttle body (see page 11-342).
9. Push the throttle valve closed as shown.

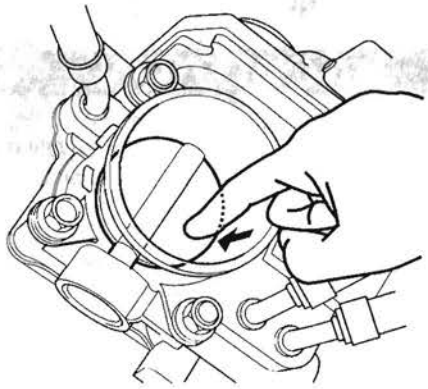

10. Release the throttle valve.

    Does the throttle valve return?

    YES—Clean the throttle body (see page 11-338), then go to step 12.

    NO—Go to step 11.
11. Replace the throttle body (see page 11-342).
12. Turn the ignition switch ON (II).
13. Reset the PCM with the HDS.
14. Do the PCM idle learn procedure (see page 11-304).
15. Turn the ignition switch OFF, and wait 10 seconds.
16. Turn the ignition switch ON (II).
17. Check for Temporary DTCs or DTCs with the HDS.

    Is DTC P1683 indicated?

    YES—If the throttle body was cleaned, go to step 11. If the throttle body was replaced, check for poor connections or loose terminals at the throttle body and the PCM, then go to step 1.

    NO—Troubleshooting is complete. If any other Temporary DTCs or DTCs are indicated, go to the indicated DTC's troubleshooting. ■

DTC Troubleshooting (cont'd)

DTC P1684: Throttle Valve Return Spring Performance Problem

⚠CAUTION

Do not insert your fingers into the installed throttle body when you turn the ignition switch ON (II) or while the ignition switch is ON (II). If you do, you will seriously injure your fingers if the throttle valve is activated.

NOTE: Before you troubleshoot, record all freeze data and any on-board snapshot, and review the general troubleshooting information (see page 11-3).

1. Turn the ignition switch ON (II).
2. Clear the DTC with the HDS.
3. Start the engine. Hold the engine speed at 3,000 rpm without load (in Park or neutral) until the radiator fan comes on, then let it idle.
4. Turn the ignition switch OFF, and wait 10 seconds.
5. Turn the ignition switch ON (II).
6. Check for Temporary DTCs or DTCs with the HDS.

   Is DTC P1684 indicated?

   YES—Go to step 7.

   NO—Intermittent failure, the system is OK at this time. Check for poor connections or loose terminals at the throttle body and the PCM. ■
7. Turn the ignition switch OFF.
8. Disconnect the air intake duct from the throttle body (see page 11-342).
9. Push the throttle valve open as shown.

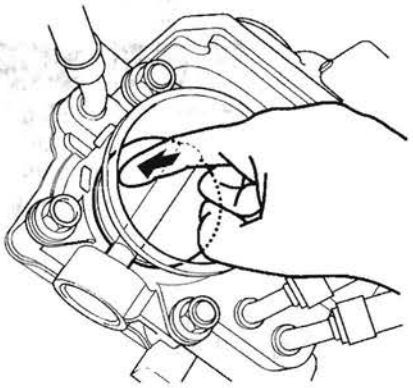

10. Release the throttle valve.

    Does the throttle valve return?

    YES—Clean the throttle body (see page 11-338), then go to step 12.

    NO—Go to step 11.
11. Replace the throttle body (see page 11-342).
12. Turn the ignition switch ON (II).
13. Reset the PCM with the HDS.
14. Do the PCM idle learn procedure (see page 11-304).
15. Turn the ignition switch OFF, and wait 10 seconds.
16. Turn the ignition switch ON (II).
17. Check for Temporary DTCs or DTCs with the HDS.

    Is DTC P1684 indicated?

    YES—If the throttle body was cleaned, go to step 11. If the throttle body was replaced, check for poor connections or loose terminals at the throttle body and the PCM, then go to step 1.

    NO—Troubleshooting is complete. If any other Temporary DTCs or DTCs are indicated, go to the indicated DTC's troubleshooting. ■

DTC P2101: Electronic Throttle Control System (ETCS) Malfunction

⚠CAUTION

Do not insert your fingers into the installed throttle body when you turn the ignition switch ON (II) or while the ignition switch is ON (II). If you do, you will seriously injure your fingers if the throttle valve is activated.

NOTE: Before you troubleshoot, record all freeze data and any on-board snapshot, and review the general troubleshooting information (see page 11-3).

1. Turn the ignition switch ON (II).
2. Clear the DTC with the HDS.
3. Do the ETCS TEST in the INSPECTION MENU with the HDS.
4. Check for Temporary DTCs or DTCs with the HDS.

   Is DTC P2101 indicated?

   YES—Go to step 7.

   NO—Go to step 5.
5. Test-drive the vehicle for several minutes in the range of these recorded freeze data parameters:

   • ENGINE SPEED
   • VSS
   • APP SENSOR
6. Check for Temporary DTCs or DTCs with the HDS.

   Is DTC P2101 indicated?

   YES—Go to step 7.

   NO—Intermittent failure, the system is OK at this time. Check for poor connections or loose terminals at the throttle body and the PCM, then clean the throttle body (see page 11-338). ■
7. Turn the ignition switch OFF.
8. Disconnect the air intake duct from the throttle body (see page 11-342).
9. Turn the ignition switch ON (II).
10. Clear the DTC with the HDS.
11. Do the ETCS TEST in the INSPECTION MENU with the HDS.
12. Visually check the throttle valve operation.

    Does the throttle valve operate smoothly?

    YES—Clean the throttle body (see page 11-338), then go to step 22 and recheck. If DTC P2101 is indicated, go to step 19.

    NO—Go to step 13.
13. Turn the ignition switch OFF.
14. Disconnect the throttle body 6P connector.
15. Jump the SCS line with the HDS.
16. Disconnect PCM connector C (44P).
17. Connect throttle body 6P connector terminals No. 5 and No. 6 with a jumper wire.

THROTTLE BODY 6P CONNECTOR

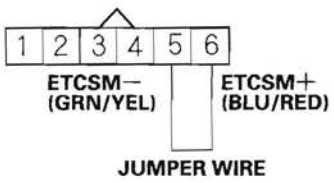

Wire side of female terminals

(cont'd)

DTC Troubleshooting (cont'd)

18. Check for continuity between PCM connector terminals C3 and C4.

PCM CONNECTOR C (44P)

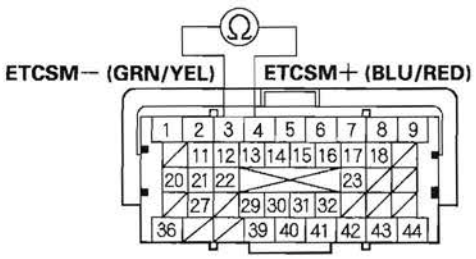

Terminal side of female terminals

Is there continuity?

YES—Go to step 27.

NO—Repair open in the wires between the throttle body and the PCM (C3, C4), then go to step 21.

19. Turn the ignition switch OFF.
20. Replace the throttle body (see page 11-342).
21. Reconnect all connectors.
22. Turn the ignition switch ON (II).
23. Reset the PCM with the HDS.
24. Do the PCM idle learn procedure (see page 11-304).
25. Test-drive the vehicle for several minutes in the range of these recorded freeze data parameters:
    - ENGINE SPEED
    - VSS
    - APP SENSOR
26. Check for Temporary DTCs or DTCs with the HDS.

    Is DTC P2101 indicated?

    YES—Check for poor connections or loose terminals at the throttle body and the PCM, then clean the throttle body (see page 11-338), and go to step 1.

    NO—Troubleshooting is complete. If any other Temporary DTCs or DTCs are indicated, go to the indicated DTC's troubleshooting. ■
27. Reconnect all connectors.
28. Update the PCM if it does not have the latest software (see page 11-7), or substitute a known-good PCM (see page 11-8).
29. Test-drive the vehicle for several minutes in the range of these recorded freeze data parameters:
    - ENGINE SPEED
    - VSS
    - APP SENSOR
30. Check for Temporary DTCs or DTCs with the HDS.

    Is DTC P2101 indicated?

    YES—Check for poor connections or loose terminals at the throttle body and the PCM. If the PCM was updated, substitute a known-good PCM (see page 11-8), then go to step 29. If the PCM was substituted, go to step 1.

    NO—If the PCM was updated, troubleshooting is complete. If the PCM was substituted, replace the original PCM (see page 11-219). If any other Temporary DTCs or DTCs are indicated, go to the indicated DTC's troubleshooting. ■

DTC P2118: Throttle Actuator Current Range/ Performance Problem

NOTE: Before you troubleshoot, record all freeze data and any on-board snapshot, and review the general troubleshooting information (see page 11-3).

1. Jump the SCS line with the HDS.
2. Disconnect PCM connector C (44P).
3. Measure resistance between PCM connector terminals C3 and C4.

PCM CONNECTOR C (44P)

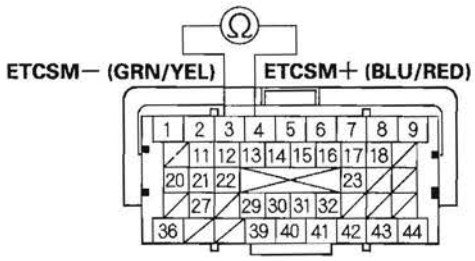

Terminal side of female terminals

Is there about 1.0 Ω or less?

YES—Go to step 4.

NO—Go to step 15.

4. Disconnect the throttle body 6P connector.
5. At the throttle body side, measure resistance between throttle body 6P connector terminals No. 5 and No. 6 with the throttle fully closed.

THROTTLE BODY 6P CONNECTOR

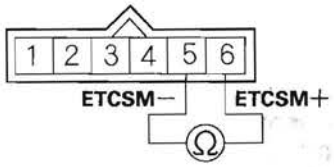

Terminal side of male terminals

Is there about 1.0 Ω or less?

YES—Go to step 6.

NO—Repair short in the wires between PCM C3 (ETCSM− line) and C4 (ETCSM+ line), then go to step 7.

6. Replace the throttle body (see page 11-342).
7. Reconnect all connectors.
8. Turn the ignition switch ON (II).
9. Reset the PCM with the HDS.

(cont'd)

DTC Troubleshooting (cont'd)

10. Do the PCM idle learn procedure (see page 11-304).
11. Turn the ignition switch OFF.
12. Turn the ignition switch ON (II).
13. Slowly press the accelerator pedal to the floor.
14. Check for Temporary DTCs or DTCs with the HDS.

    Is DTC P2118 indicated?

    YES—Check for poor connections or loose terminals at the throttle body and the PCM, then go to step 1.

    NO—Troubleshooting is complete. If any other Temporary DTCs or DTCs are indicated, go to the indicated DTC's troubleshooting.■
15. Reconnect all connectors.
16. Update the PCM if it does not have the latest software (see page 11-7), or substitute a known-good PCM (see page 11-8).
17. Turn the ignition switch OFF.
18. Turn the ignition switch ON (II).
19. Slowly press the accelerator pedal to the floor.
20. Check for Temporary DTCs or DTCs with the HDS.

    Is DTC P2118 indicated?

    YES—Check for poor connections or loose terminals at the throttle body and the PCM. If the PCM was updated, substitute a known-good PCM (see page 11-8), then go to step 17. If the PCM was substituted, go to step 1.

    NO—If the PCM was updated, troubleshooting is complete. If the PCM was substituted, replace the original PCM (see page 11-219). If any other Temporary DTCs or DTCs are indicated, go to the indicated DTC's troubleshooting.■

DTC P2122: APP Sensor A (Throttle Position Sensor D) Circuit Low Voltage

NOTE: Before you troubleshoot, record all freeze data and any on-board snapshot, and review the general troubleshooting information (see page 11-3).

1. Turn the ignition switch ON (II).
2. Check APP SENSOR A in the DATA LIST with the HDS.

   Is there about 0.2 V or less?

   YES—Go to step 3.

   NO—Intermittent failure, the system is OK at this time. Check for poor connections or loose terminals at APP sensor A and the PCM. ■
3. Turn the ignition switch OFF.
4. Disconnect the APP sensor 6P connector.
5. Turn the ignition switch ON (II).
6. Measure voltage between APP sensor 6P connector terminals No. 2 and No. 3.

APP SENSOR 6P CONNECTOR

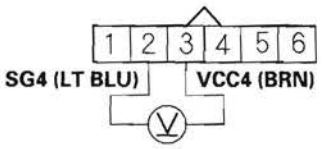

Wire side of female terminals

Is there about 5 V?

YES—Go to step 7.

NO—Go to step 17.

7. Turn the ignition switch OFF.
8. Jump the SCS line with the HDS.
9. Disconnect PCM connector A (44P).
10. Check for continuity between APP sensor 6P connector terminal No. 1 and body ground.

APP SENSOR 6P CONNECTOR

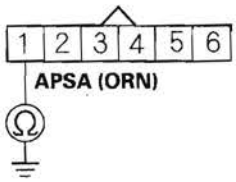

Wire side of female terminals

Is there continuity?

YES—Repair short in the wire between the PCM (A17) and APP sensor A, then go to step 24.

NO—Go to step 11.

11. Connect APP sensor 6P connector terminal No. 1 to body ground with a jumper wire.

APP SENSOR 6P CONNECTOR

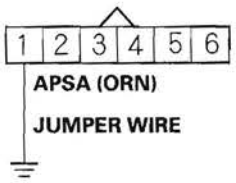

Wire side of female terminals

(cont'd)

DTC Troubleshooting (cont'd)

12. Check for continuity between PCM connector terminal A17 and body ground.

PCM CONNECTOR A (44P)

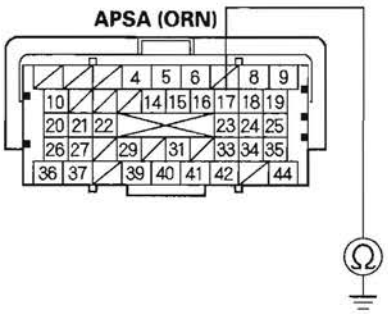

Terminal side of female terminals

Is there continuity?

YES—Go to step 13.

NO—Repair open in the wire between the PCM (A17) and APP sensor A, then go to step 24.

13. Reconnect PCM connector A (44P).

14. Connect APP sensor 6P connector terminals No. 1 and No. 3 with a jumper wire.

APP SENSOR 6P CONNECTOR

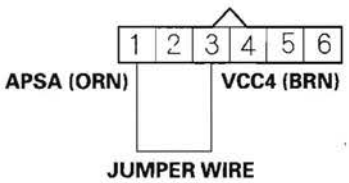

Wire side of female terminals

15. Turn the ignition switch ON (II).

16. Check APP SENSOR A in the DATA LIST with the HDS.

Is there about 0.2 V or less?

YES—Go to step 29.

NO—Go to step 22.

17. Turn the ignition switch OFF.

18. Jump the SCS line with the HDS.

19. Disconnect PCM connector A (44P).

20. Connect APP sensor 6P connector terminal No. 3 to body ground with a jumper wire.

APP SENSOR 6P CONNECTOR

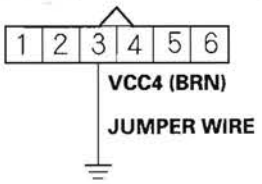

Wire side of female terminals

21. Check for continuity between PCM connector terminal A25 and body ground.

PCM CONNECTOR A (44P)

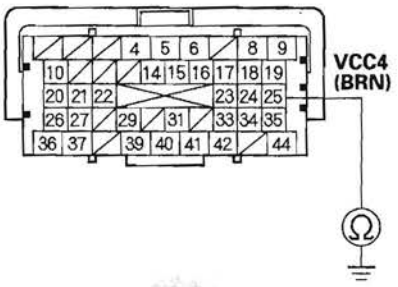

Terminal side of female terminals

Is there continuity?

YES—Go to step 29.

NO—Repair open in the wire between the PCM (A25) and APP sensor A, then go to step 24.

22. Turn the ignition switch OFF.

23. Replace the accelerator pedal module (see page 11-262).

24. Reconnect all connectors.

25. Turn the ignition switch ON (II).

26. Reset the PCM with the HDS.

27. Do the PCM idle learn procedure (see page 11-304).

28. Check for Temporary DTCs or DTCs with the HDS.

Is DTC P2122 indicated?

YES—Check for poor connections or loose terminals at APP sensor A and the PCM, then go to step 1.

NO—Troubleshooting is complete. If any other Temporary DTCs or DTCs are indicated, go to the indicated DTC's troubleshooting. ■

29. Reconnect all connectors.

30. Update the PCM if it does not have the latest software (see page 11-7), or substitute a known-good PCM (see page 11-8).

31. Check for Temporary DTCs or DTCs with the HDS.

Is DTC P2122 indicated?

YES—Check for poor connections or loose terminals at APP sensor A and the PCM. If the PCM was updated, substitute a known-good PCM (see page 11-8), then recheck. If the PCM was substituted, go to step 1.

NO—If the PCM was updated, troubleshooting is complete. If the PCM was substituted, replace the original PCM (see page 11-219). If any other Temporary DTCs or DTCs are indicated, go to the indicated DTC's troubleshooting. ■

DTC Troubleshooting (cont'd)

DTC P2123: APP Sensor A (Throttle Position Sensor D) Circuit High Voltage

NOTE: Before you troubleshoot, record all freeze data and any on-board snapshot, and review the general troubleshooting information (see page 11-3).

1. Turn the ignition switch ON (II).
2. Check APP SENSOR A in the DATA LIST with the HDS.

   Is there about 4.9 V or more?

   YES—Go to step 3.

   NO—Intermittent failure, the system is OK at this time. Check for poor connections or loose terminals at APP sensor A and the PCM. ■
3. Turn the ignition switch OFF.
4. Disconnect the APP sensor 6P connector.
5. Turn the ignition switch ON (II).
6. Measure voltage between APP sensor 6P connector terminals No. 2 and No. 3.

APP SENSOR 6P CONNECTOR

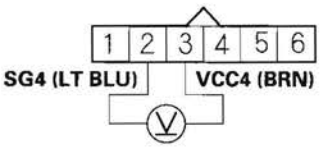

Wire side of female terminals

Is there about 5 V?

YES—Go to step 12.

NO—Go to step 7.

7. Turn the ignition switch OFF.
8. Jump the SCS line with the HDS.
9. Disconnect PCM connector A (44P).
10. Connect APP sensor 6P connector terminal No. 2 to body ground with a jumper wire.

APP SENSOR 6P CONNECTOR

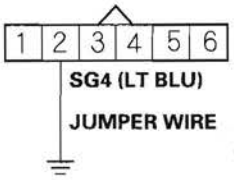

Wire side of female terminals

11. Check for continuity between PCM connector terminal A35 and body ground.

PCM CONNECTOR A (44P)

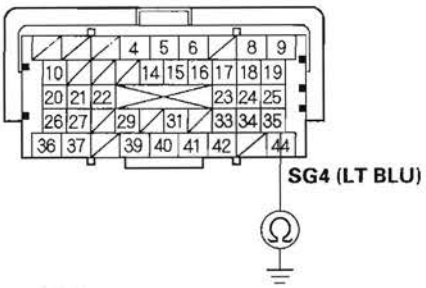

Terminal side of female terminals

Is there continuity?

YES—Go to step 19.

NO—Repair open in the wire between the PCM (A35) and APP sensor A, then go to step 14.

12. Turn the ignition switch OFF.

13. Replace the accelerator pedal module (see page 11-262).

14. Reconnect all connectors.

15. Turn the ignition switch ON (II).

16. Reset the PCM with the HDS.

17. Do the PCM idle learn procedure (see page 11-304).

18. Check for Temporary DTCs or DTCs with the HDS.

    Is DTC P2123 indicated?

    YES—Check for poor connections or loose terminals at APP sensor A and the PCM, then go to step 1.

    NO—Troubleshooting is complete. If any other Temporary DTCs or DTCs are indicated, go to the indicated DTC's troubleshooting.■

19. Reconnect all connectors.

20. Update the PCM if it does not have the latest software (see page 11-7), or substitute a known-good PCM (see page 11-8).

21. Check for Temporary DTCs or DTCs with the HDS.

    Is DTC P2123 indicated?

    YES—Check for poor connections or loose terminals at APP sensor A and the PCM. If the PCM was updated, substitute a known-good PCM (see page 11-8), then recheck. If the PCM was substituted, go to step 1.

    NO—If the PCM was updated, troubleshooting is complete. If the PCM was substituted, replace the original PCM (see page 11-219). If any other Temporary DTCs or DTCs are indicated, go to the indicated DTC's troubleshooting.■

DTC Troubleshooting (cont'd)

DTC P2127: APP Sensor B (Throttle Position Sensor E) Circuit Low Voltage

NOTE: Before you troubleshoot, record all freeze data and any on-board snapshot, and review the general troubleshooting information (see page 11-3).

1. Turn the ignition switch ON (II).
2. Check APP SENSOR B in the DATA LIST with the HDS.

   Is there about 0.2 V or less?

   YES—Go to step 3.

   NO—Intermittent failure, the system is OK at this time. Check for poor connections or loose terminals at APP sensor B and the PCM. ■
3. Turn the ignition switch OFF.
4. Disconnect the APP sensor 6P connector.
5. Turn the ignition switch ON (II).
6. Measure voltage between APP sensor 6P connector terminals No. 5 and No. 6.

APP SENSOR 6P CONNECTOR

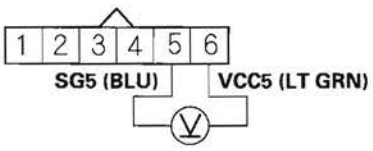

Wire side of female terminals

Is there about 5 V?

YES—Go to step 7.

NO—Go to step 17.

7. Turn the ignition switch OFF.
8. Jump the SCS line with the HDS.
9. Disconnect PCM connector A (44P).
10. Check for continuity between APP sensor 6P connector terminal No. 4 and body ground.

APP SENSOR 6P CONNECTOR

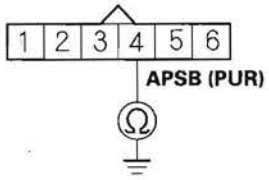

Wire side of female terminals

Is there continuity?

YES—Repair short in the wire between the PCM (A18) and APP sensor B, then go to step 24.

NO—Go to step 11.

11. Connect APP sensor 6P connector terminal No. 4 to body ground with a jumper wire.

APP SENSOR 6P CONNECTOR

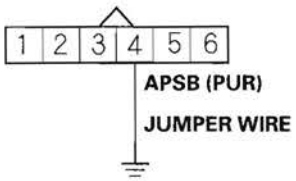

Wire side of female terminals

12. Check for continuity between PCM connector terminal A18 and body ground.

PCM CONNECTOR A (44P)

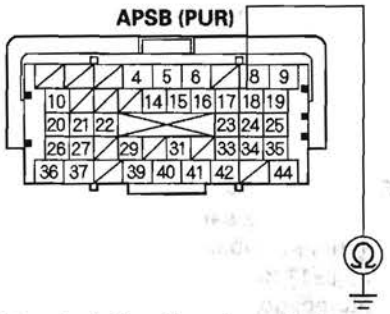

Terminal side of female terminals

Is there continuity?

YES—Go to step 13.

NO—Repair open in the wire between the PCM (A18) and APP sensor B, then go to step 24.

13. Reconnect PCM connector A (44P).

14. Connect APP sensor 6P connector terminals No. 4 and No. 6 with a jumper wire.

APP SENSOR 6P CONNECTOR

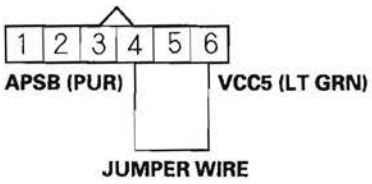

Wire side of female terminals

15. Turn the ignition switch ON (II).

16. Check APP SENSOR B in the DATA LIST with the HDS.

Is there about 0.2 V or less?

YES—Go to step 29.

NO—Go to step 22.

17. Turn the ignition switch OFF.

18. Jump the SCS line with the HDS.

19. Disconnect PCM connector A (44P).

20. Connect APP sensor 6P connector terminal No. 6 to body ground with a jumper wire.

APP SENSOR 6P CONNECTOR

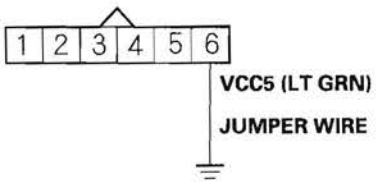

Wire side of female terminals

(cont'd)

DTC Troubleshooting (cont'd)

21. Check for continuity between PCM connector terminal A24 and body ground.

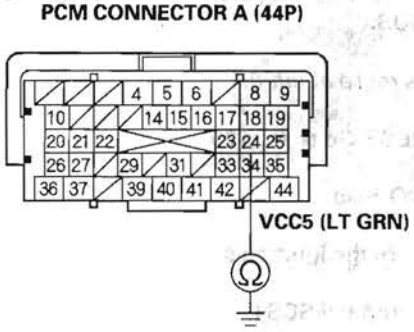

Terminal side of female terminals

Is there continuity?

YES—Go to step 29.

NO—Repair open in the wire between the PCM (A24) and APP sensor B, then go to step 24.

22. Turn the ignition switch OFF.
23. Replace the accelerator pedal module (see page 11-262).
24. Reconnect all connectors.
25. Turn the ignition switch ON (II).
26. Reset the PCM with the HDS.
27. Do the PCM idle learn procedure (see page 11-304).
28. Check for Temporary DTCs or DTCs with the HDS.

    Is DTC P2127 indicated?

    YES—Check for poor connections or loose terminals at APP sensor B and the PCM, then go to step 1.

    NO—Troubleshooting is complete. If any other Temporary DTCs or DTCs are indicated, go to the indicated DTC's troubleshooting.■

29. Reconnect all connectors.
30. Update the PCM if it does not have the latest software (see page 11-7), or substitute a known-good PCM (see page 11-8).
31. Check for Temporary DTCs or DTCs with the HDS.

    Is DTC P2127 indicated?

    YES—Check for poor connections or loose terminals at APP sensor B and the PCM. If the PCM was updated, substitute a known-good PCM (see page 11-8), then recheck. If the PCM was substituted, go to step 1.

    NO—If the PCM was updated, troubleshooting is complete. If the PCM was substituted, replace the original PCM (see page 11-219). If any other Temporary DTCs or DTCs are indicated, go to the indicated DTC's troubleshooting.■

DTC P2128: APP Sensor B (Throttle Position Sensor E) Circuit High Voltage

NOTE: Before you troubleshoot, record all freeze data and any on-board snapshot, and review the general troubleshooting information (see page 11-3).

1. Turn the ignition switch ON (II).
2. Check APP SENSOR B in the DATA LIST with the HDS.

   Is there about 4.0 V or more?

   YES—Go to step 3.

   NO—Intermittent failure, the system is OK at this time. Check for poor connections or loose terminals at APP sensor B and the PCM. ■
3. Turn the ignition switch OFF.
4. Disconnect the APP sensor 6P connector.
5. Turn the ignition switch ON (II).
6. Measure voltage between APP sensor 6P connector terminals No. 5 and No. 6.

APP SENSOR 6P CONNECTOR

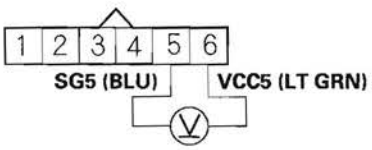

Wire side of female terminals

Is there about 5 V?

YES—Go to step 12.

NO—Go to step 7.

7. Turn the ignition switch OFF.
8. Jump the SCS line with the HDS.
9. Disconnect PCM connector A (44P).
10. Connect APP sensor 6P connector terminal No. 5 to body ground with a jumper wire.

APP SENSOR 6P CONNECTOR

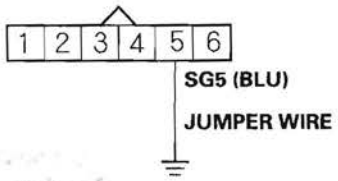

Wire side of female terminals

11. Check for continuity between PCM connector terminal A34 and body ground.

PCM CONNECTOR A (44P)

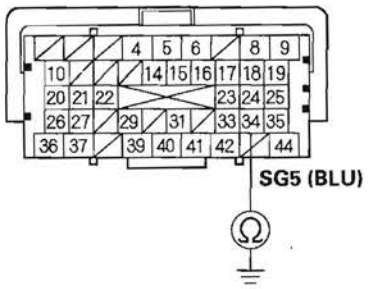

Terminal side of female terminals

Is there continuity?

YES—Go to step 19.

NO—Repair open in the wire between the PCM (A34) and APP sensor B, then go to step 14.

(cont'd)

DTC Troubleshooting (cont'd)

12. Turn the ignition switch OFF.
13. Replace the accelerator pedal module (see page 11-262).
14. Reconnect all connectors.
15. Turn the ignition switch ON (II).
16. Reset the PCM with the HDS.
17. Do the PCM idle learn procedure (see page 11-304).
18. Check for Temporary DTCs or DTCs with the HDS.

    Is DTC P2128 indicated?

    YES—Check for poor connections or loose terminals at APP sensor B and the PCM, then go to step 1.

    NO—Troubleshooting is complete. If any other Temporary DTCs or DTCs are indicated, go to the indicated DTC's troubleshooting. ■
19. Reconnect all connectors.
20. Update the PCM if it does not have the latest software (see page 11-7), or substitute a known-good PCM (see page 11-8).
21. Check for Temporary DTCs or DTCs with the HDS.

    Is DTC P2128 indicated?

    YES—Check for poor connections or loose terminals at APP sensor B and the PCM. If the PCM was updated, substitute a known-good PCM (see page 11-8), then recheck. If the PCM was substituted, go to step 1.

    NO—If the PCM was updated, troubleshooting is complete. If the PCM was substituted, replace the original PCM (see page 11-219). If any other Temporary DTCs or DTCs are indicated, go to the indicated DTC's troubleshooting. ■

DTC P2135: TP Sensor A/B Voltage Incorrect Correlation

⚠CAUTION

Do not insert your fingers into the installed throttle body when you turn the ignition switch ON (II) or while the ignition switch is ON (II). If you do, you will seriously injure your fingers if the throttle valve is activated.

NOTE: Before you troubleshoot, record all freeze data and any on-board snapshot, and review the general troubleshooting information (see page 11-3).

1. Turn the ignition switch ON (II).
2. Clear the DTC with the HDS.
3. Do the ETCS TEST in the INSPECTION MENU with the HDS.
4. Check for Temporary DTCs or DTCs with the HDS.

   Is DTC P2135 indicated?

   YES—Go to step 5.

   NO—Intermittent failure, the system is OK at this time. Check for poor connections or loose terminals at the throttle body and the PCM. ■
5. Turn the ignition switch OFF.
6. Disconnect the air intake duct from the throttle body (see page 11-342).
7. Turn the ignition switch ON (II).
8. Clear the DTC with the HDS.
9. Visually check the throttle valve operation.

   Does the valve temporarily move to its fully closed position?

   YES—Go to step 16.

   NO—Go to step 10.
10. Turn the ignition switch OFF.
11. Jump the SCS line with the HDS.
12. Disconnect PCM connector C (44P).
13. Check for continuity between PCM connector terminals C20 and C21.

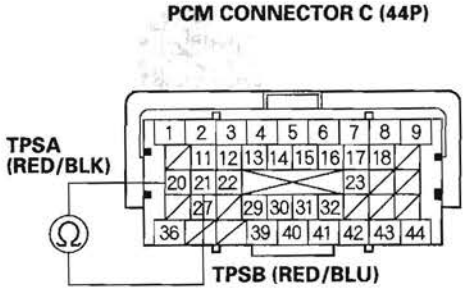

Terminal side of female terminals

Is there continuity?

YES—Go to step 14.

NO—Go to step 23.

(cont'd)

DTC Troubleshooting (cont'd)

14. Disconnect the throttle body 6P connector.
15. Check for continuity between PCM connector terminals C20 and C21.

PCM CONNECTOR C (44P)

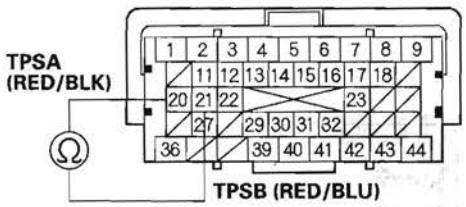

Terminal side of female terminals

Is there continuity?

YES—Repair short in the wires between PCM C20 (TPSA line) and C21 (TPSB line), then go to step 18.

NO—Go to step 16.

16. Turn the ignition switch OFF.
17. Replace the throttle body (see page 11-342).
18. Reconnect all connectors.
19. Turn the ignition switch ON (II).
20. Reset the PCM with the HDS.
21. Do the PCM idle learn procedure (see page 11-304).
22. Check for Temporary DTCs or DTCs with the HDS.

    Is DTC P2135 indicated?

    YES—Check for poor connections or loose terminals at the throttle body and the PCM, then go to step 1.

    NO—Troubleshooting is complete. If any other Temporary DTCs or DTCs are indicated, go to the indicated DTC's troubleshooting. ■

23. Reconnect all connectors.
24. Update the PCM if it does not have the latest software (see page 11-7), or substitute a known-good PCM (see page 11-8).
25. Check for Temporary DTCs or DTCs with the HDS.

    Is DTC P2135 indicated?

    YES—Check for poor connections or loose terminals at the throttle body and the PCM. If the PCM was updated, substitute a known-good PCM (see page 11-8), then recheck. If the PCM was substituted, go to step 1.

    NO—If the PCM was updated, troubleshooting is complete. If the PCM was substituted, replace the original PCM (see page 11-219). If any other Temporary DTCs or DTCs are indicated, go to the indicated DTC's troubleshooting. ■

DTC P2138: APP Sensor A/B (Throttle Position Sensor D/E) Incorrect Voltage Correlation

NOTE: Before you troubleshoot, record all freeze data and any on-board snapshot, and review the general troubleshooting information (see page 11-3).

1. Turn the ignition switch ON (II).
2. Clear the DTC with HDS.
3. Press the accelerator pedal to the floor.
4. Check for Temporary DTCs or DTCs with the HDS.

   Is DTC P2138 indicated?

   YES—Go to step 5.

   NO—Intermittent failure, the system is OK at this time. Check for poor connections or loose terminals at the APP sensor and the PCM. ■

5. Check APP SENSOR A and APP SENSOR B in the DATA LIST with the HDS.

   Are they the same voltage?

   YES—Go to step 6.

   NO—Go to step 12.

6. Turn the ignition switch OFF.
7. Jump the SCS line with the HDS.
8. Disconnect PCM connector A (44P).
9. Check for continuity between PCM connector terminals A17 and A18.

PCM CONNECTOR A (44P)

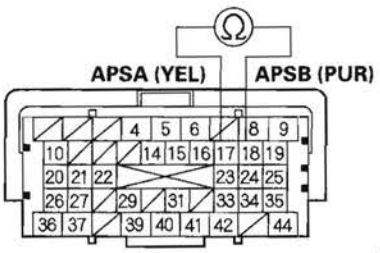

Terminal side of female terminals

Is there continuity?

YES—Go to step 10.

NO—Go to step 22.

10. Disconnect the APP sensor 6P connector.
11. Check for continuity between PCM connector terminals A17 and A18.

PCM CONNECTOR A (44P)

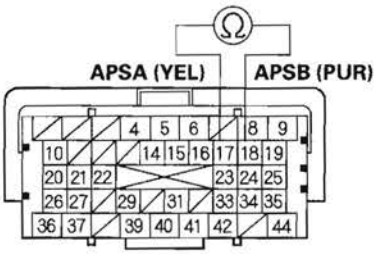

Terminal side of female terminals

Is there continuity?

YES—Repair short in the wires between PCM connector terminals A17 (APSA line) and A18 (APSB line), then go to step 14.

NO—Go to step 13.

(cont'd)

DTC Troubleshooting (cont'd)

12. Turn the ignition switch OFF.
13. Replace the accelerator pedal module (see page 11-262).
14. Reconnect all connectors.
15. Turn the ignition switch ON (II).
16. Reset the PCM with the HDS.
17. Do the PCM idle learn procedure (see page 11-304).
18. Turn the ignition switch OFF.
19. Turn the ignition switch ON (II).
20. Press the accelerator pedal to the floor.
21. Check for Temporary DTCs or DTCs with the HDS.

    Is DTC P2138 indicated?

    YES—Check for poor connections or loose terminals at APP sensor A/B and the PCM, then go to step 1.

    NO—Troubleshooting is complete. If any other Temporary DTCs or DTCs are indicated, go to the indicated DTC's troubleshooting. ■
22. Reconnect all connectors.
23. Update the PCM if it does not have the latest software (see page 11-7), or substitute a known-good PCM (see page 11-8).
24. Turn the ignition switch OFF.
25. Turn the ignition switch ON (II).
26. Press the accelerator pedal to the floor.
27. Check for Temporary DTCs or DTCs with the HDS.

    Is DTC P2138 indicated?

    YES—Check for poor connections or loose terminals at APP sensor A/B and the PCM. If the PCM was updated, substitute a known-good PCM (see page 11-8), then go to step 24. If the PCM was substituted, go to step 1.

    NO—If the PCM was updated, troubleshooting is complete. If the PCM was substituted, replace the original PCM (see page 11-219). If any other Temporary DTCs or DTCs are indicated, go to the indicated DTC's troubleshooting. ■

DTC P2176: Throttle Actuator Control System Idle Position Not Learned

⚠CAUTION

Do not insert your fingers into the installed throttle body when you turn the ignition switch ON (II) or while the ignition switch is ON (II). If you do, you will seriously injure your fingers if the throttle valve is activated.

NOTE:
- Before you troubleshoot, record all freeze data and any on-board snapshot, and review the general troubleshooting information (see page 11-3).
- If DTC P2135 is stored at the same time as DTC P2176, troubleshoot DTC P2135 first, then recheck for DTC P2176.

1. Turn the ignition switch ON (II).
2. Clear the DTC with the HDS.
3. Turn the ignition switch OFF.
4. Turn the ignition switch ON (II), and wait 10 seconds.
5. Check for Temporary DTCs or DTCs with the HDS.

   Is DTC P2176 indicated?

   YES—Go to step 6.

   NO—Intermittent failure, the system is OK at this time. Check for poor connections or loose terminals at the throttle body and the PCM, then clean the throttle body (see page 11-338). ■
6. Turn the ignition switch OFF.
7. Disconnect the air intake duct from the throttle body (see page 11-342).
8. Turn the ignition switch ON (II).
9. Clear the DTC with the HDS.
10. Do the ETCS TEST in the INSPECTION MENU with the HDS.
11. Visually check the throttle valve operation.

    Does the throttle valve move to its fully closed position?

    YES—Go to step 12.

    NO—Go to step 13.
12. Check for sludge or carbon on the throttle valve.

    Is there sludge or carbon on the throttle valve?

    YES—Clean the throttle body (see page 11-338), then go to step 22.

    NO—Go to step 19.
13. Turn the ignition switch OFF.
14. Disconnect the throttle body 6P connector.
15. Jump the SCS line with the HDS.
16. Disconnect PCM connector C (44P).
17. Connect throttle body 6P connector terminals No. 5 and No. 6 with a jumper wire.

THROTTLE BODY 6P CONNECTOR

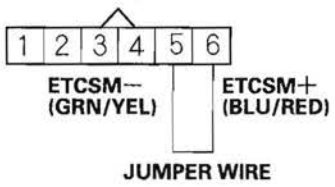

Wire side of female terminals

(cont'd)

DTC Troubleshooting (cont'd)

18. Check for continuity between PCM connector terminals C3 and C4.

PCM CONNECTOR C (44P)

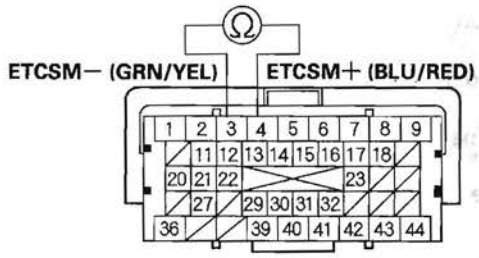

Terminal side of female terminals

Is there continuity?

YES—Go to step 28.

NO—Repair open in the wires between the throttle body and the PCM (C3, C4), then go to step 21.

19. Turn the ignition switch OFF.
20. Replace the throttle body (see page 11-342).
21. Reconnect all connectors.
22. Turn the ignition switch ON (II).
23. Reset the PCM with the HDS.
24. Do the PCM idle learn procedure (see page 11-304).
25. Turn the ignition switch OFF.
26. Turn the ignition switch ON (II), and wait 10 seconds.
27. Check for Temporary DTCs or DTCs with the HDS.

Is DTC P2176 indicated?

YES—Check for poor connections or loose terminals at the throttle body and the PCM, then clean the throttle body (see page 11-338), and go to step 1.

NO—Troubleshooting is complete. If any other Temporary DTCs or DTCs are indicated, go to the indicated DTC's troubleshooting. ■

28. Reconnect all connectors.
29. Update the PCM if it does not have the latest software (see page 11-7), or substitute a known-good PCM (see page 11-8).
30. Check for Temporary DTCs or DTCs with the HDS.

Is DTC P2176 indicated?

YES—Check for poor connections or loose terminals at the throttle body and the PCM. If the PCM was updated, substitute a known-good PCM (see page 11-8), then recheck. If the PCM was substituted, go to step 1.

NO—If the PCM was updated, troubleshooting is complete. If the PCM was substituted, replace the original PCM (see page 11-219). If any other Temporary DTCs or DTCs are indicated, go to the indicated DTC's troubleshooting. ■

APP Sensor Signal Inspection

NOTE:
- This procedure checks the APP sensor in its fully closed position. In any other position, the APP sensor stores DTCs which are covered in other troubleshooting procedures.
- Check for Temporary DTCs or DTCs with the HDS before doing this procedure. If any DTCs are indicated, troubleshoot them first, then do this procedure.
- Press the accelerator pedal several times to check its operation. If it does not operate smoothly, check the pedal. If you find a problem, replace the accelerator pedal module (see page 11-262).

1. Connect the HDS to the data link connector (DLC) (A) located under the driver's side of the dashboard.

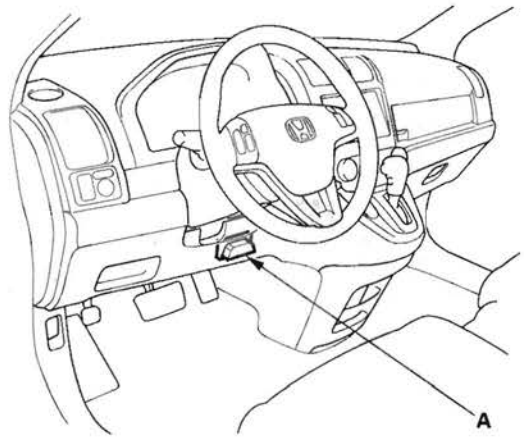

2. Turn the ignition switch ON (II).

3. Make sure the accelerator pedal is not pressed, then check the APP SENSOR in the DATA LIST with the HDS.

   - If it is 0 %, the APP sensor is OK.
   - If it is not 0 %, update the PCM if it does not have the latest software (see page 11-7), or substitute a known-good PCM (see page 11-8), then go to step 4.

4. Make sure the accelerator pedal is not pressed, then check the APP SENSOR in the DATA LIST with the HDS.

   - If it is 0 %, the APP sensor is OK.
   - If it is not 0 %, replace the accelerator pedal module (see page 11-262), then go to step 1.

Accelerator Pedal Module Removal/Installation

1. Disconnect the accelerator pedal module connector (A).

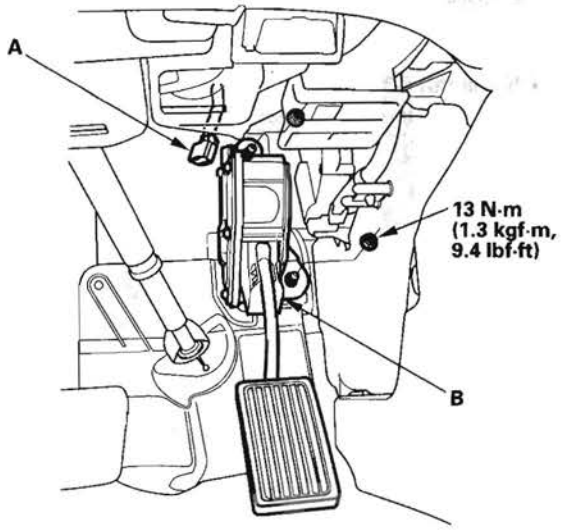

2. Remove the accelerator pedal module (B).

   NOTE: The APP sensor is not available separately. Do not disassemble the accelerator pedal module.

3. Install the parts in the reverse order of removal.

Component Location Index

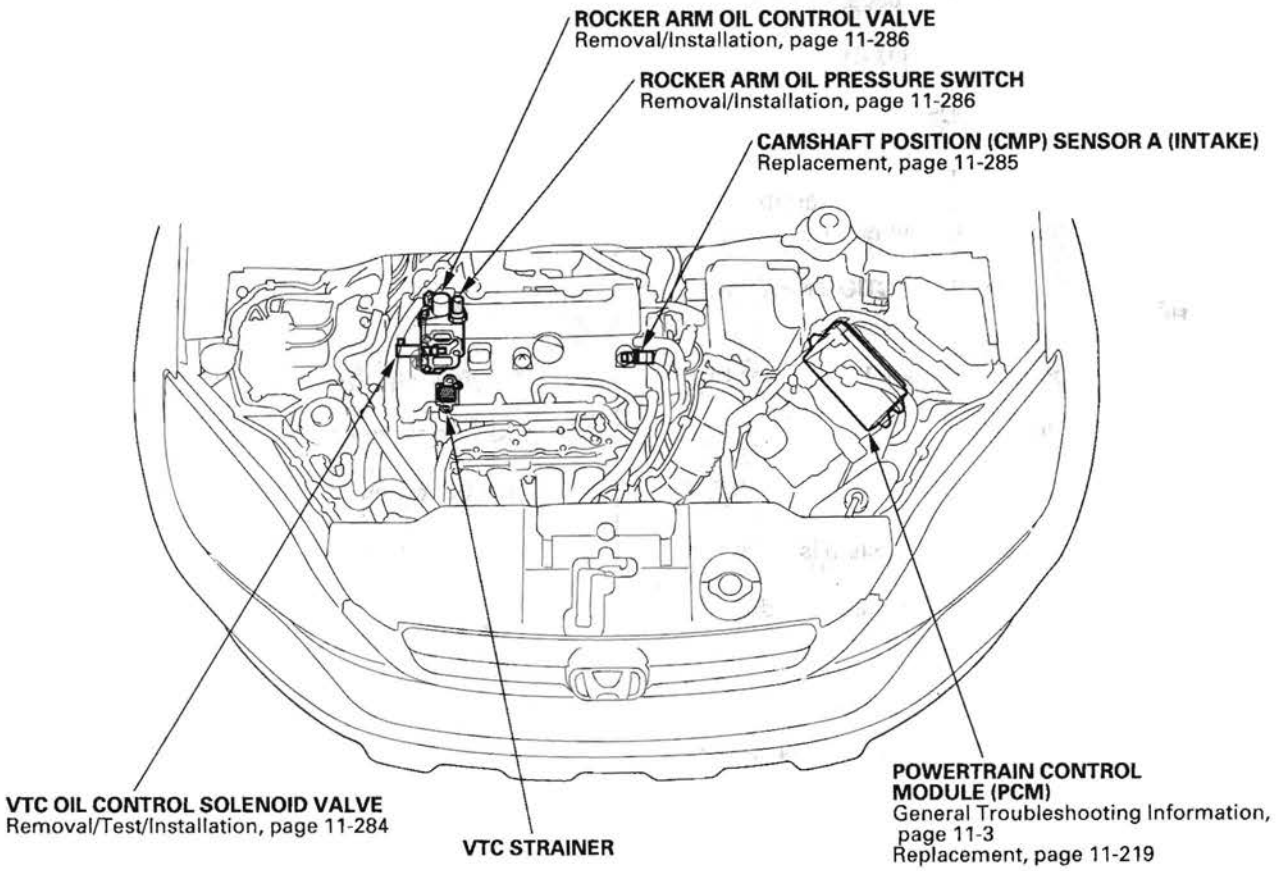

DTC Troubleshooting

DTC P0010: VTC Oil Control Solenoid Valve Malfunction

NOTE: Before you troubleshoot, record all freeze data and any on-board snapshot, and review the general troubleshooting information (see page 11-3).

1. Turn the ignition switch ON (II).
2. Clear the DTC with the HDS.
3. Start the engine. Hold the engine speed at 3,000 rpm without load (in Park or neutral) until the radiator fan comes on, then let it idle.
4. Do the VTC TEST in the INSPECTION MENU with the HDS.
5. Check for Temporary DTCs or DTCs with the HDS.

   Is DTC P0010 indicated?

   YES—Go to step 6.

   NO—Intermittent failure, the system is OK at this time. Check for poor connections or loose terminals at the VTC oil control solenoid valve and the PCM.■
6. Turn the ignition switch OFF.
7. Disconnect the VTC oil control solenoid valve 2P connector.
8. Measure resistance between VTC oil control solenoid valve 2P connector terminals No. 1 and No. 2.

VTC OIL CONTROL SOLENOID VALVE 2P CONNECTOR

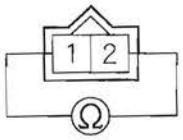

Terminal side of male terminals

Is there 6.75—8.25 Ω at room temperature?

YES—Go to step 9.

NO—Go to step 14.

9. Check for continuity between VTC oil control solenoid valve 2P connector terminal No. 1 and body ground.

VTC OIL CONTROL SOLENOID VALVE 2P CONNECTOR

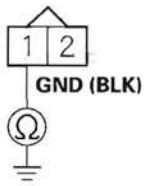

Wire side of female terminals

Is there continuity?

YES—Go to step 10.

NO—Repair open in the wire between the VTC oil control solenoid valve and G101 (see page 22-16), then go to step 15.

10. Jump the SCS line with the HDS.

11. Disconnect PCM connector C (44P).

12. Check for continuity between PCM connector terminal C23 and body ground.

PCM CONNECTOR C (44P)

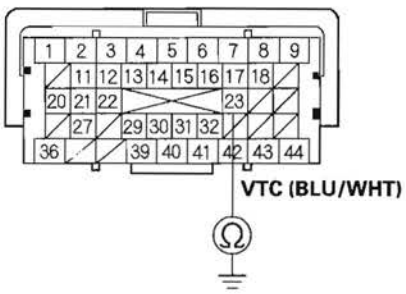

Terminal side of female terminals

Is there continuity?

YES—Repair short in the wire between the PCM (C23) and the VTC oil control solenoid valve, then go to step 15.

NO—Go to step 13.

13. Check for continuity between VTC oil control solenoid valve 2P connector terminal No. 2 and PCM connector terminal C23.

VTC OIL CONTROL SOLENOID VALVE 2P CONNECTOR

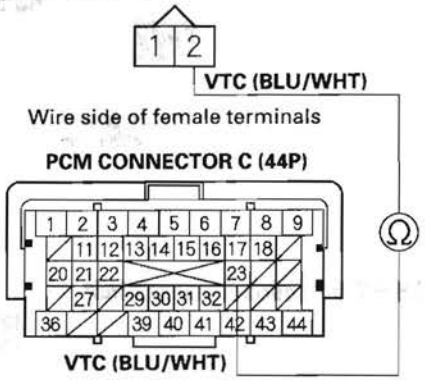

Terminal side of female terminals

Is there continuity?

YES—Go to step 22.

NO—Repair open in the wire between the PCM (C23) and the VTC oil control solenoid valve, then go to step 15.

14. Replace the VTC oil control solenoid valve (see page 11-284).

15. Reconnect all connectors.

16. Turn the ignition switch ON (II).

17. Reset the PCM with the HDS.

18. Do the PCM idle learn procedure (see page 11-304).

19. Do the VTC TEST in the INSPECTION MENU with the HDS.

(cont'd)

DTC Troubleshooting (cont'd)

20. Check for Temporary DTCs or DTCs with the HDS.

    Is DTC P0010 indicated?

    YES—Check for poor connections or loose terminals at the VTC oil control solenoid valve and the PCM, then go to step 1.

    NO—Go to step 21.

21. Monitor the OBD STATUS for DTC P0010 in the DTCs MENU with the HDS.

    Does the screen indicate PASSED?

    YES—Troubleshooting is complete. If any other Temporary DTCs or DTCs were indicated in step 20, go to the indicated DTC's troubleshooting. ■

    NO—If the screen indicates FAILED, check for poor connections or loose terminals at the VTC oil control solenoid valve and the PCM, then go to step 1. If the screen indicates NOT COMPLETED, go to step 19.

22. Reconnect all connectors.

23. Update the PCM if it does not have the latest software (see page 11-7), or substitute a known-good PCM (see page 11-8).

24. Do the VTC TEST in the INSPECTION MENU with the HDS.

25. Check for Temporary DTCs or DTCs with the HDS.

    Is DTC P0010 indicated?

    YES—Check for poor connections or loose terminals at the VTC oil control solenoid valve and the PCM. If the PCM was updated, substitute a known-good PCM (see page 11-8), then go to step 24. If the PCM was substituted, go to step 1.

    NO—Go to step 26.

26. Monitor the OBD STATUS for DTC P0010 in the DTCs MENU with the HDS.

    Does the screen indicate PASSED?

    YES—If the PCM was updated, troubleshooting is complete. If the PCM was substituted, replace the original PCM (see page 11-219). If any other Temporary DTCs or DTCs were indicated in step 25, go to the indicated DTC's troubleshooting. ■

    NO—If the screen indicates FAILED, check for poor connections or loose terminals at the VTC oil control solenoid valve and the PCM. If the PCM was updated, substitute a known-good PCM (see page 11-8), then go to step 24. If the PCM was substituted, go to step 1. If the screen indicates NOT COMPLETED, go to step 24.

DTC P0011: VTC System Malfunction

NOTE: Before you troubleshoot, record all freeze data and any on-board snapshot, and review the general troubleshooting information (see page 11-3).

1. Turn the ignition switch ON (II).
2. Clear the DTC with the HDS.
3. Start the engine.
4. Watch the low oil pressure indicator with the engine running.

   Is the low oil pressure indicator on?

   YES—Check the oil pressure (see page 8-9), then go to step 15.

   NO—Go to step 5.

5. Do the VTC TEST in the INSPECTION MENU with the HDS.

   Is the result OK?

   YES—Go to step 6.

   NO—Go to step 9.

6. Test-drive at a steady speed between 19—38 mph (30—60 km/h) for 10 minutes.
7. Check the VTC STATUS in the DATA LIST with the HDS.

   Does it indicate ON?

   YES—Go to step 8.

   NO—Go to step 6 and recheck.

8. Monitor the OBD STATUS for DTC P0011 in the DTCs MENU with the HDS.

   Does the screen indicate FAILED?

   YES—Go to step 9.

   NO—If the screen indicates PASSED, intermittent failure, the system is OK at this time. If the screen indicates NOT COMPLETED, go to step 5 and recheck.

9. Turn the ignition switch OFF.
10. Remove the auto-tensioner (see page 6-22).
11. Remove the VTC strainer (A), and check it for clogging.

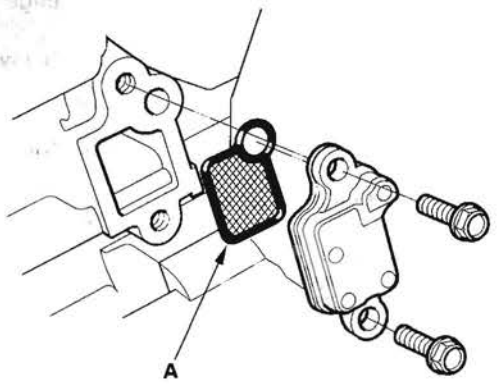

   Is the strainer OK?

   YES—Go to step 12.

   NO—Clean the VTC strainer, replace the engine oil filter and the engine oil, then go to step 14.

12. Test the VTC oil control solenoid valve (see page 11-284).

   Is the VTC oil control solenoid valve OK?

   YES—Go to step 13.

   NO—Replace the VTC oil control solenoid valve (see page 11-284), then go to step 14.

(cont'd)

DTC Troubleshooting (cont'd)

13. Inspect the VTC actuator (see page 6-8).

    Is the VTC actuator OK?

    YES—Check the VTC system oil passages, then go to step 14.

    NO—Replace the VTC actuator (see page 6-35), then go to step 14.

14. Turn the ignition switch ON (II).

15. Reset the PCM with the HDS.

16. Clear the CKP pattern with the HDS.

17. Do the PCM idle learn procedure (see page 11-304).

18. Do the CKP pattern learn procedure (see page 11-4).

19. Do the VTC TEST in the INSPECTION MENU with the HDS.

20. Check for Temporary DTCs or DTCs with the HDS.

    Is DTC P0011 indicated?

    YES—Check for poor connections or loose terminals at the VTC oil control solenoid valve and the PCM, then go to step 1.

    NO—Go to step 21.

21. Monitor the OBD STATUS for DTC P0011 in the DTCs MENU with the HDS.

    Does the screen indicate PASSED?

    YES—Troubleshooting is complete. If any other Temporary DTCs or DTCs were indicated in step 20, go to the indicated DTC's troubleshooting. ■

    NO—If the screen indicates FAILED, check for poor connections or loose terminals at the VTC oil control solenoid valve and the PCM, then go to step 1. If the screen indicates NOT COMPLETED, go to step 19.

DTC P0340: CMP Sensor A No Signal

NOTE: Before you troubleshoot, record all freeze data and any on-board snapshot, and review the general troubleshooting information (see page 11-3).

1. Turn the ignition switch ON (II).
2. Clear the DTC with the HDS.
3. Start the engine.
4. Check for Temporary DTCs or DTCs with the HDS.

   Is DTC P0340 indicated?

   YES—Go to step 5.

   NO—Intermittent failure, the system is OK at this time. Check for poor connections or loose terminals at CMP sensor A and the PCM. ■
5. Turn the ignition switch OFF.
6. Disconnect the CMP sensor A 3P connector.
7. Turn the ignition switch ON (II).
8. Measure voltage between CMP sensor A 3P connector terminal No. 3 and body ground.

CMP SENSOR A 3P CONNECTOR

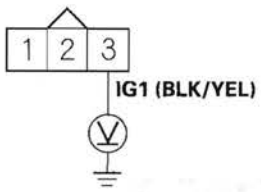

Wire side of female terminals

Is there battery voltage?

YES—Go to step 9.

NO—Repair open in the wire between CMP sensor A and the No. 3 ALTERNATOR (10 A) fuse, then go to step 18.

9. Measure voltage between CMP sensor A 3P connector terminal No. 1 and body ground.

CMP SENSOR A 3P CONNECTOR

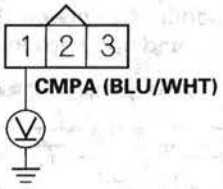

Wire side of female terminals

Is there about 5 V?

YES—Go to step 10.

NO—Go to step 11.

10. Measure voltage between CMP sensor A 3P connector terminals No. 2 and No. 3.

CMP SENSOR A 3P CONNECTOR

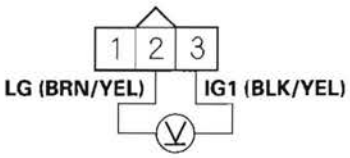

Wire side of female terminals

Is there battery voltage?

YES—Go to step 16.

NO—Repair open in the wire between CMP sensor A and G101 (see page 22-16), then go to step 18.

(cont'd)

DTC Troubleshooting (cont'd)

11. Turn the ignition switch OFF.
12. Jump the SCS line with the HDS.
13. Disconnect PCM connector C (44P).
14. Check for continuity between PCM connector terminal C41 and body ground.

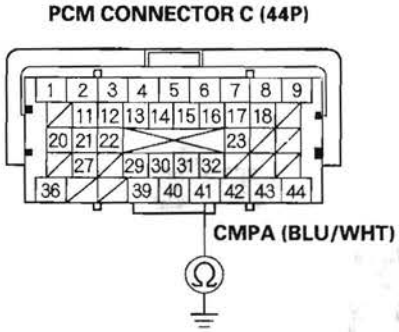

Terminal side of female terminals

Is there continuity?

YES—Repair short in the wire between the PCM (C41) and CMP sensor A, then go to step 18.

NO—Go to step 15.

15. Check for continuity between CMP sensor A 3P connector terminal No. 1 and PCM connector terminal C41.

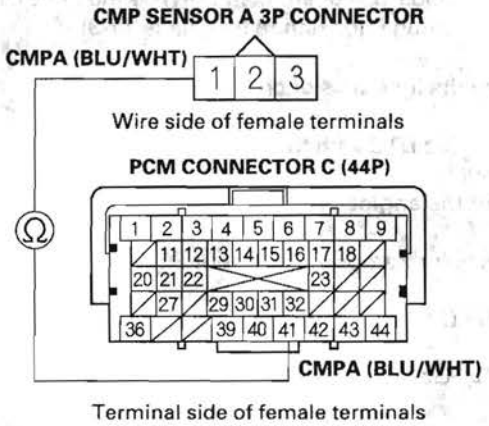

Terminal side of female terminals

Is there continuity?

YES—Go to step 23.

NO—Repair open in the wire between the PCM (C41) and CMP sensor A, then go to step 18.

16. Turn the ignition switch OFF.
17. Replace CMP sensor A (see page 11-285).
18. Reconnect all connectors.
19. Turn the ignition switch ON (II).
20. Reset the PCM with the HDS.
21. Do the PCM idle learn procedure (see page 11-304).
22. Check for Temporary DTCs or DTCs with the HDS.

    Is DTC P0340 indicated?

    YES—Check for poor connections or loose terminals at CMP sensor A and the PCM, then go to step 1.

    NO—Troubleshooting is complete. If any other Temporary DTCs or DTCs are indicated, go to the indicated DTC's troubleshooting. ■
23. Reconnect all connectors.
24. Update the PCM if it does not have the latest software (see page 11-7), or substitute a known-good PCM (see page 11-8).
25. Check for Temporary DTCs or DTCs with the HDS.

    Is DTC P0340 indicated?

    YES—Check for poor connections or loose terminals at CMP sensor A and the PCM. If the PCM was updated, substitute a known-good PCM (see page 11-8), then recheck. If the PCM was substituted, go to step 1.

    NO—If the PCM was updated, troubleshooting is complete. If the PCM was substituted, replace the original PCM (see page 11-219). If any other Temporary DTCs or DTCs are indicated, go to the indicated DTC's troubleshooting. ■

DTC Troubleshooting (cont'd)

DTC P0341: CMP Sensor and CKP Sensor Incorrect Phase Detected

NOTE: Before you troubleshoot, record all freeze data and any on-board snapshot, and review the general troubleshooting information (see page 11-3).

1. Turn the ignition switch ON (II).
2. Clear the DTC with the HDS.
3. Start the engine.
4. Check for Temporary DTCs or DTCs with the HDS.

   Is DTC P0341 indicated?

   YES—Go to step 9.

   NO—Go to step 5.
5. Do the VTC TEST in the INSPECTION MENU with the HDS.

   Is the result OK?

   YES—Go to step 6.

   NO—Go to step 9.
6. Test-drive at a steady speed between 19—38 mph (30—60 km/h) for 10 minutes.
7. Check the VTC STATUS in the DATA LIST with the HDS.

   Does it indicate ON?

   YES—Go to step 8.

   NO—Go to step 6 and recheck.
8. Monitor the OBD STATUS for DTC P0341 in the DTCs MENU with the HDS.

   Does the screen indicate FAILED?

   YES—Go to step 9.

   NO—If the screen indicates PASSED, intermittent failure, the system is OK at this time. Check for poor connections or loose terminals at the VTC oil control solenoid valve and the PCM. If the screen indicates NOT COMPLETED, go to step 6 and recheck.
9. Turn the ignition switch OFF.
10. Test the VTC oil control solenoid valve (see page 11-284).

    Is the VTC oil control solenoid valve OK?

    YES—Go to step 11.

    NO—Replace the VTC oil control solenoid valve (see page 11-284), then go to step 14.
11. Check the camshaft timing (see step 5 on page 6-13).

    Is the camshaft timing OK?

    YES—Go to step 12.

    NO—Reset the camshaft timing (see page 6-16), then go to step 14.
12. Check for damage or stretch at the cam chain (see page 6-25).

    Is the cam chain damaged?

    YES—Replace the cam chain and auto-tensioner (see page 6-13), then go to step 14.

    NO—Go to step 13.
13. Inspect the VTC actuator (see page 6-8).

    Is the actuator OK?

    YES—Go to step 14.

    NO—Replace the VTC actuator (see page 6-35), then go to step 14.

14. Turn the ignition switch ON (II).

15. Reset the PCM with the HDS.

16. Clear the CKP pattern with the HDS.

17. Do the PCM idle learn procedure (see page 11-304).

18. Do the CKP pattern learn procedure (see page 11-4).

19. Test-drive at a steady speed between 19—38 mph (30—60 km/h) for 10 minutes.

20. Check for Temporary DTCs or DTCs with the HDS.

    Is DTC P0341 indicated?

    YES—Check for poor connections or loose terminals at the VTC oil control solenoid valve and the PCM, then go to step 1.

    NO—Go to step 21.

21. Monitor the OBD STATUS for DTC P0341 in the DTCs MENU with the HDS.

    Does the screen indicate PASSED?

    YES—Troubleshooting is complete. If any other Temporary DTCs or DTCs were indicated in step 20, go to the indicated DTC's troubleshooting. ■

    NO—If the screen indicates FAILED, check for poor connections or loose terminals at the VTC oil control solenoid valve and the PCM, then go to step 1. If the screen indicates NOT COMPLETED, go to step 19.

DTC Troubleshooting (cont'd)

DTC P0344: CMP Sensor A Intermittent Interruption

NOTE: Before you troubleshoot, record all freeze data and any on-board snapshot, and review the general troubleshooting information (see page 11-3).

1. Turn the ignition switch ON (II).
2. Clear the DTC with the HDS.
3. Start the engine, and let it idle for 10 seconds.
4. Check the CMP NOISE A COUNT in the DATA LIST with the HDS.

   Are 0 counts indicated?

   YES—Go to step 7.

   NO—Go to step 5.
5. Test-drive the vehicle for several minutes in the range of these recorded freeze data parameters:

   • ENGINE SPEED
   • VSS
6. Check the CMP NOISE A COUNT in the DATA LIST with the HDS.

   Are 0 counts indicated?

   YES—Go to step 7.

   NO—Intermittent failure, the system is OK at this time. Check for poor connections or loose terminals at CMP sensor A and the PCM. ■
7. Check for poor or loose connections and terminals at these locations:

   • CMP sensor A
   • PCM
   • Engine ground
   • Body ground

   Are the connections and terminals OK?

   YES—Go to step 8.

   NO—Repair the connectors or terminals, then go to step 11.
8. Check for damage on the CMP sensor A pulser plate (see page 6-34).

   Is the pulser plate damaged?

   YES—Replace the CMP sensor A pulser plate (see page 6-34), then go to step 11.

   NO—Go to step 9.
9. Turn the ignition switch OFF.
10. Replace CMP sensor A (see page 11-285).
11. Turn the ignition switch ON (II).
12. Reset the PCM with the HDS.
13. Do the PCM idle learn procedure (see page 11-304).
14. Start the engine, and let it idle for 10 seconds.
15. Check for Temporary DTCs or DTCs with the HDS.

    Is DTC P0344 indicated?

    YES—Check for poor connections or loose terminals at CMP sensor A and the PCM, then go to step 1.

    NO—Troubleshooting is complete. If any other Temporary DTCs or DTCs are indicated, go to the indicated DTC's troubleshooting. ■

DTC P1009: VTC Advance Malfunction

NOTE:
- Before you troubleshoot, record all freeze data and any on-board snapshot, and review the general troubleshooting information (see page 11-3).
- If DTC P0341 is stored at the same time as DTC P1009, troubleshoot DTC P1009 first, then recheck for DTC P0341.

1. Turn the ignition switch ON (II).
2. Clear the DTC with the HDS.
3. Start the engine.
4. Check for Temporary DTCs or DTCs with the HDS.

   Is DTC P1009 indicated?

   YES—Go to step 5.

   NO—Intermittent failure, the system is OK at this time. ■
5. Turn the ignition switch OFF.
6. Remove the auto-tensioner (see page 6-22).
7. Remove the VTC strainer (A), and check it for clogging.

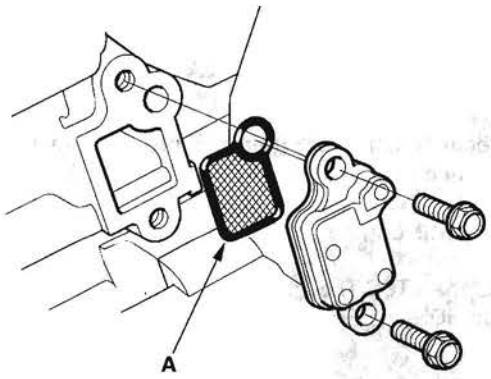

   Is the strainer OK?

   YES—Go to step 8.

   NO—Clean the VTC strainer, replace the engine oil filter and the engine oil, then go to step 10.
8. Test the VTC oil control solenoid valve (see page 11-284).

   Is the valve OK?

   YES—Go to step 9.

   NO—Replace the VTC oil control solenoid valve (see page 11-284), then go to step 10.
9. Inspect the VTC actuator (see page 6-8).

   Is the actuator OK?

   YES—Check the VTC system oil passages, then go to step 10.

   NO—Replace the VTC actuator (see page 6-35), then go to step 10.
10. Turn the ignition switch ON (II).
11. Reset the PCM with the HDS.
12. Clear the CKP pattern with the HDS.
13. Do the PCM idle learn procedure (see page 11-304).
14. Do the CKP pattern learn procedure (see page 11-4).
15. Check for Temporary DTCs or DTCs with the HDS.

    Is DTC P1009 indicated?

    YES—Check the oil passages at the VTC system, then go to step 1.

    NO—Troubleshooting is complete. If any other Temporary DTCs or DTCs are indicated, go to the indicated DTC's troubleshooting. ■

DTC Troubleshooting (cont'd)

DTC P2646: Rocker Arm Oil Pressure Switch Circuit Low Voltage

Special Tools Required
- Pressure gauge adapter 07NAJ-P07010A
- A/T low pressure gauge w/panel 07406-0070301
- A/T pressure hose 07406-0020201
- A/T pressure hose, 2,210 mm 07MAJ-PY4011A
- A/T pressure adapter 07MAJ-PY40120
- Oil pressure hose 07ZAJ-S5AA200

NOTE: Before you troubleshoot, record all freeze data and any on-board snapshot, and review the general troubleshooting information (see page 11-3).

1. Check the engine oil level.

   Is the engine oil level OK?

   YES—Go to step 2.

   NO—Adjust the engine oil to the proper level, then go to step 19.

2. Turn the ignition switch ON (II).
3. Clear the DTC with the HDS.
4. Do the VTEC TEST in the INSPECTION MENU with the HDS.

   Is the result OK?

   YES—Intermittent failure, the system is OK at this time. Check for poor connections or loose terminals at the rocker arm oil pressure switch, the rocker arm oil control solenoid, and the PCM.■

   NO—Go to step 5.

5. Turn the ignition switch OFF.
6. Disconnect the rocker arm oil pressure switch 2P connector.
7. Turn the ignition switch ON (II).
8. Check the VTEC PRES SW in the DATA LIST with the HDS.

   Is SWITCH ON indicated?

   YES—Go to step 15.

   NO—Go to step 9.

9. Turn the ignition switch OFF.
10. Remove the rocker arm oil pressure switch (A), and install the special tools as shown, then install the rocker arm oil pressure switch in the oil pressure gauge attachment (B).

    NOTE: Install the parts in the reverse order of removal with a new O-ring.

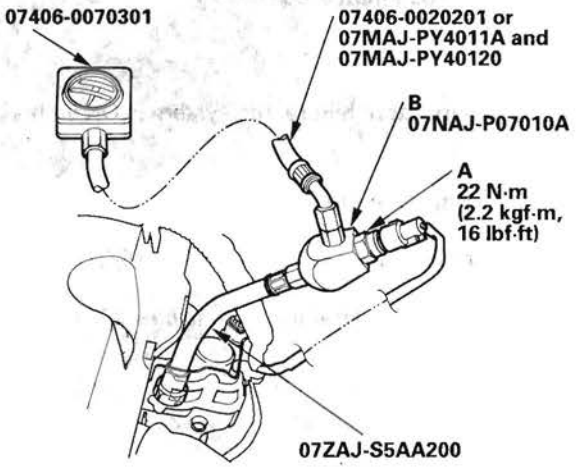

11. Reconnect the rocker arm oil pressure switch 2P connector.
12. Start the engine.
13. Do the VTEC TEST in the INSPECTION MENU with the HDS.

14. Check the oil pressure.

    Does the oil pressure increase to at least 392 kPa (4.0 kgf/cm², 56.9 psi)?

    YES—Replace the rocker arm oil pressure switch (see page 11-286), then go to step 18.

    NO—Inspect the VTEC system. If it is OK, replace the rocker arm oil control valve (see page 11-286), then go to step 18.

15. Turn the ignition switch OFF.

16. Disconnect PCM connector C (44P).

17. Check for continuity between PCM connector terminal C22 and body ground.

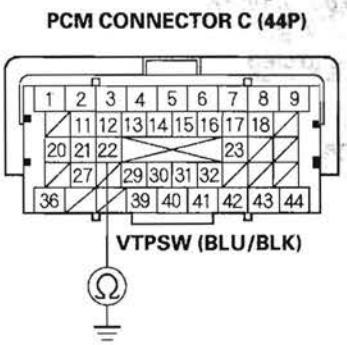

Terminal side of female terminals

Is there continuity?

YES—Repair short in the wire between the PCM (C22) and the rocker arm oil pressure switch, then go to step 18.

NO—Go to step 24.

18. Reconnect all connectors.

19. Turn the ignition switch ON (II).

20. Reset the PCM with the HDS.

21. Do the PCM idle learn procedure (see page 11-304).

22. Do the VTEC TEST in the INSPECTION MENU with the HDS.

23. Check for Temporary DTCs or DTCs with the HDS.

    Is DTC P2646 indicated?

    YES—Check for poor connections or loose terminals at the rocker arm oil pressure switch, the rocker arm oil control solenoid, and the PCM, then go step 1.

    NO—Troubleshooting is complete. If any other Temporary DTCs or DTCs are indicated, go to the indicated DTC's troubleshooting. ■

24. Reconnect all connectors.

25. Update the PCM if it does not have the latest software (see page 11-7), or substitute a known-good PCM (see page 11-8).

26. Do the VTEC TEST in the INSPECTION MENU with the HDS.

27. Check for Temporary DTCs or DTCs with the HDS.

    Is DTC P2646 indicated?

    YES—Check for poor connections or loose terminals at the rocker arm oil pressure switch, the rocker arm oil control solenoid, and the PCM. If the PCM was updated, substitute a known-good PCM (see page 11-8), then go to step 26. If the PCM was substituted, go to step 1.

    NO—If the PCM was updated, troubleshooting is complete. If the PCM was substituted, replace the original PCM (see page 11-219). If any other Temporary DTCs or DTCs are indicated, go to the indicated DTC's troubleshooting. ■

DTC Troubleshooting (cont'd)

DTC P2647: Rocker Arm Oil Pressure Switch Circuit High Voltage

NOTE: Before you troubleshoot, record all freeze data and any on-board snapshot, and review the general troubleshooting information (see page 11-3).

1. Check the engine oil level.

   Is the engine oil level OK?

   YES—Go to step 2.

   NO—Adjust the engine oil to the proper level, then go to step 17.

2. Turn the ignition switch ON (II).

3. Clear the DTC with the HDS.

4. Do the VTEC TEST in the INSPECTION MENU with the HDS.

   Is the result OK?

   YES—Intermittent failure, the system is OK at this time. Check for poor connections or loose terminals at the rocker arm oil pressure switch, the rocker arm oil control solenoid, and the PCM. ■

   NO—Go to step 5.

5. Check the result of step 4.

   - VTEC Switch Failure
   - VTEC Switch Open
   - VTEC Switch SIG Line Open
   - VTEC Switch GND Line Open

   Is the test result any of above?

   YES—Go to step 6.

   NO—Check for poor connections or loose terminals at the rocker arm oil pressure switch. If it is OK, replace the rocker arm oil control solenoid (see page 11-286), then go to step 15.

6. Turn the ignition switch OFF.

7. Disconnect the rocker arm oil pressure switch 2P connector.

8. At the rocker arm oil pressure switch side, check for continuity between rocker arm oil pressure switch 2P connector terminals No. 1 and No. 2.

ROCKER ARM OIL PRESSURE SWITCH 2P CONNECTOR

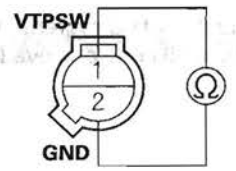

Terminal side of male terminals

Is there continuity?

YES—Go to step 9.

NO—Replace the rocker arm oil pressure switch (see page 11-286), then go to step 16.

9. Turn the ignition switch ON (II).

10. Measure voltage between rocker arm oil pressure switch 2P connector terminal No. 1 and body ground.

ROCKER ARM OIL PRESSURE SWITCH 2P CONNECTOR

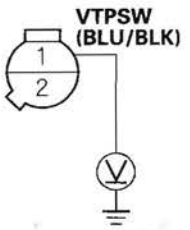

Wire side of female terminals

Is there battery voltage?

YES—Repair open in the wire between the rocker arm oil pressure switch and G101 (see page 22-16), then go to step 15.

NO—Go to step 11.

11. Turn the ignition switch OFF.

12. Jump the SCS line with the HDS.

13. Disconnect PCM connector C (44P).

14. Check for continuity between rocker arm oil pressure switch 2P connector terminal No. 1 and PCM connector terminal C22.

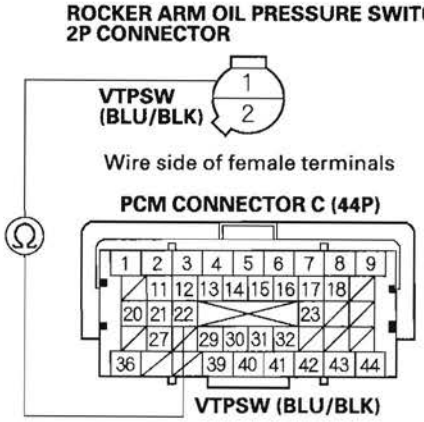

Is there continuity?

YES—Go to step 21.

NO—Repair open in the wire between the PCM (C22) and the rocker arm oil pressure switch, then go to step 16.

15. Turn the ignition switch OFF.

16. Reconnect all connectors.

17. Turn the ignition switch ON (II).

18. Reset the PCM with the HDS.

19. Do the PCM idle learn procedure (see page 11-304).

20. Check for Temporary DTCs or DTCs with the HDS.

Is DTC P2647 indicated?

YES—Check for poor connections or loose terminals at the rocker arm oil pressure switch, the rocker arm oil control solenoid, and the PCM, then go to step 1.

NO—Troubleshooting is complete. If any other Temporary DTCs or DTCs are indicated, go to the indicated DTC's troubleshooting. ■

21. Reconnect all connectors.

22. Update the PCM if it does not have the latest software (see page 11-7), or substitute a known-good PCM (see page 11-8).

23. Start the engine.

24. Check for Temporary DTCs or DTCs with the HDS.

Is DTC P2647 indicated?

YES—Check for poor connections or loose terminals at the rocker arm oil pressure switch, the rocker arm oil control solenoid, and the PCM. If the PCM was updated, substitute a known-good PCM (see page 11-8), then go to step 23. If the PCM was substituted, go to step 1.

NO—If the PCM was updated, troubleshooting is complete. If the PCM was substituted, replace the original PCM (see page 11-219). If any other Temporary DTCs or DTCs are indicated, go to the indicated DTC's troubleshooting. ■

DTC Troubleshooting (cont'd)

DTC P2648: Rocker Arm Oil Control Solenoid Circuit Low Voltage

NOTE: Before you troubleshoot, record all freeze data and any on-board snapshot, and review the general troubleshooting information (see page 11-3).

1. Turn the ignition switch ON (II).
2. Clear the DTC with the HDS.
3. Do the VTEC TEST in the INSPECTION MENU with the HDS.

   Is the result OK?

   YES—Intermittent failure, the system is OK at this time. Check for poor connections or loose terminals at the rocker arm oil control solenoid and the PCM.■

   NO—Go to step 4.
4. Turn the ignition switch OFF.
5. Disconnect the rocker arm oil control solenoid 2P connector.
6. Measure resistance between rocker arm oil control solenoid 2P connector terminals No. 1 and No. 2.

ROCKER ARM OIL CONTROL SOLENOID 2P CONNECTOR

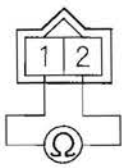

Terminal side of male terminals

Is there 14—30 Ω at room temperature?

YES—Go to step 7.

NO—Go to step 10.

7. Jump the SCS line with the HDS.
8. Disconnect PCM connector B (44P).
9. Check for continuity between PCM connector terminal B34 and body ground.

PCM CONNECTOR B (44P)

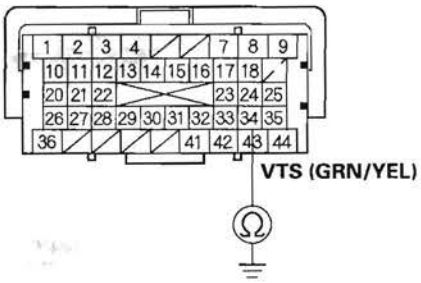

Terminal side of female terminals

Is there continuity?

YES—Repair short in the wire between the PCM (B34) and the rocker arm oil control solenoid, then go to step 11.

NO—Go to step 18.

10. Replace the rocker arm oil control valve (see page 11-286).
11. Reconnect all connectors.
12. Turn the ignition switch ON (II).
13. Reset the PCM with the HDS.
14. Do the PCM idle learn procedure (see page 11-304).
15. Do the VTEC TEST in the INSPECTION MENU with the HDS.

16. Check for Temporary DTCs or DTCs with the HDS.

    Is DTC P2648 indicated?

    YES—Check for poor connections or loose terminals at the rocker arm oil control solenoid and the PCM, then go to step 1.

    NO—Go to step 17.

17. Monitor the OBD STATUS for DTC P2648 in the DTCs MENU with the HDS.

    Does the screen indicate PASSED?

    YES—Troubleshooting is complete. If any other Temporary DTCs or DTCs were indicated in step 16, go to the indicated DTC's troubleshooting. ■

    NO—If the screen indicates FAILED, check for poor connections or loose terminals at the rocker arm oil control solenoid and the PCM, then go to step 1. If the screen indicates NOT COMPLETED, go to step 15.

18. Reconnect all connectors.

19. Update the PCM if it does not have the latest software (see page 11-7), or substitute a known-good PCM (see page 11-8).

20. Do the VTEC TEST in the INSPECTION MENU with the HDS.

21. Check for Temporary DTCs or DTCs with the HDS.

    Is DTC P2648 indicated?

    YES—Check for poor connections or loose terminals at the rocker arm oil control solenoid and the PCM. If the PCM was updated, substitute a known-good PCM (see page 11-8), then go to step 20. If the PCM was substituted, go to step 1.

    NO—Go to step 22.

22. Monitor the OBD STATUS for DTC P2648 in the DTCs MENU with the HDS.

    Does the screen indicate PASSED?

    YES—If the PCM was updated, troubleshooting is complete. If the PCM was substituted, replace the original PCM (see page 11-219). If any other Temporary DTCs or DTCs were indicated in step 21, go to the indicated DTC's troubleshooting. ■

    NO—If the screen indicates FAILED, check for poor connections or loose terminals at the rocker arm oil control solenoid and the PCM. If the PCM was updated, substitute a known-good PCM (see page 11-8), then go to step 20. If the PCM was substituted, go to step 1. If the screen indicates OUT OF CONDITION, go to step 20.

DTC Troubleshooting (cont'd)

DTC P2649: Rocker Arm Oil Control Solenoid Circuit High Voltage

NOTE: Before you troubleshoot, record all freeze data and any on-board snapshot, and review the general troubleshooting information (see page 11-3).

1. Turn the ignition switch ON (II).
2. Clear the DTC with the HDS.
3. Start the engine. Hold the engine speed at 3,000 rpm without load (in Park or neutral) until the radiator fan comes on, then let it idle.
4. Check for Temporary DTCs or DTCs with the HDS.

   Is DTC P2649 indicated?

   YES—Go to step 5.

   NO—Intermittent failure, the system is OK at this time. Check for poor connections or loose terminals at the rocker arm oil control solenoid and the PCM. ■
5. Turn the ignition switch OFF.
6. Disconnect the rocker arm oil control solenoid 2P connector.
7. Measure resistance between rocker arm oil control solenoid 2P connector terminals No. 1 and No. 2.

   ROCKER ARM OIL CONTROL SOLENOID 2P CONNECTOR

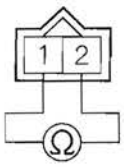

   Terminal side of male terminals

   Is there 14—30 Ω at room temperature?

   YES—Go to step 8.

   NO—Go to step 12.
8. Check for continuity between rocker arm oil control solenoid 2P connector terminal No. 1 and body ground.

   ROCKER ARM OIL CONTROL SOLENOID 2P CONNECTOR

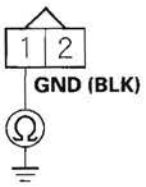

   Wire side of female terminals

   Is there continuity?

   YES—Go to step 9.

   NO—Repair open in the wire between the rocker arm oil control solenoid and G101 (see page 22-16), then go to step 13.
9. Jump the SCS line with the HDS.
10. Disconnect PCM connector B (44P).

11. Check for continuity between PCM connector terminal B34 and rocker arm oil control solenoid 2P connector terminal No. 2.

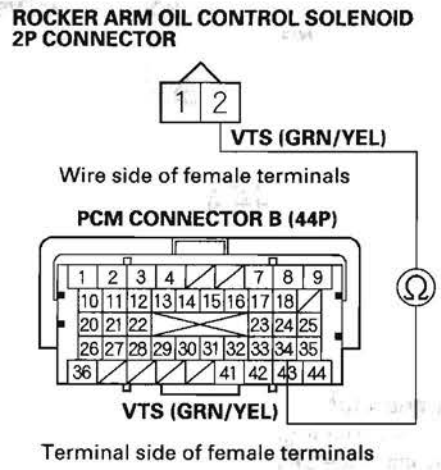

Is there continuity?

YES—Go to step 19.

NO—Repair open in the wire between the PCM (B34) and the rocker arm oil control solenoid, then go to step 13.

12. Replace the rocker arm oil control valve (see page 11-286).

13. Reconnect all connectors.

14. Turn the ignition switch ON (II).

15. Reset the PCM with the HDS.

16. Do the PCM idle learn procedure (see page 11-304).

17. Check for Temporary DTCs or DTCs with the HDS.

Is DTC P2649 indicated?

YES—Check for poor connections or loose terminals at the rocker arm oil control solenoid and the PCM, then go to step 1.

NO—Go to step 18.

18. Monitor the OBD STATUS for DTC P2649 in the DTCs MENU with the HDS.

Does the screen indicate PASSED?

YES—Troubleshooting is complete. If any other Temporary DTCs or DTCs were indicated in step 17, go to the indicated DTC's troubleshooting. ■

NO—If the screen indicates FAILED, check for poor connections or loose terminals at the rocker arm oil control solenoid and the PCM, then go to step 1. If the screen indicates NOT COMPLETED, go to step 16.

19. Reconnect all connectors.

20. Update the PCM if it does not have the latest software (see page 11-7), or substitute a known-good PCM (see page 11-8).

21. Start the engine.

22. Check for Temporary DTCs or DTCs with the HDS.

Is DTC P2649 indicated?

YES—Check for poor connections or loose terminals at the rocker arm oil control solenoid and the PCM. If the PCM was updated, substitute a known-good PCM (see page 11-8), then go to step 21. If the PCM was substituted, go to step 1.

NO—Go to step 23.

23. Monitor the OBD STATUS for DTC P2649 in the DTCs MENU with the HDS.

Does the screen indicate PASSED?

YES—If the PCM was updated, troubleshooting is complete. If the PCM was substituted, replace the original PCM (see page 11-219). If any other Temporary DTCs or DTCs were indicated in step 22, go to the indicated DTC's troubleshooting. ■

NO—If the screen indicates FAILED, check for poor connections or loose terminals at the rocker arm oil control solenoid and the PCM. If the PCM was updated, substitute a known-good PCM (see page 11-8), then go to step 21. If the PCM was substituted, go to step 1. If the screen indicates OUT OF CONDITION, go to step 21.

VTC Oil Control Solenoid Valve Removal/Test/Installation

1. Disconnect the VTC oil control solenoid valve 2P connector (A).

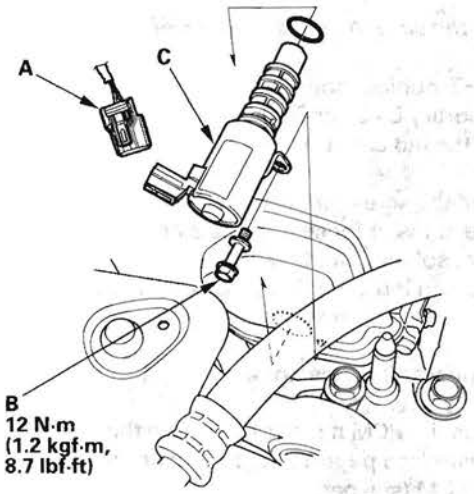

2. Remove the bolt (B) and the VTC oil control solenoid valve (C).

3. Check the VTC oil control solenoid valve strainer for clogging. If the strainer is clogged, replace the VTC oil control solenoid valve.

4. Note the amount of valve opening by observing the position of the piston shoulder (A) through the valve retard drain port. If you see the shoulder of the piston, the valve is open and must be replaced.

Closed

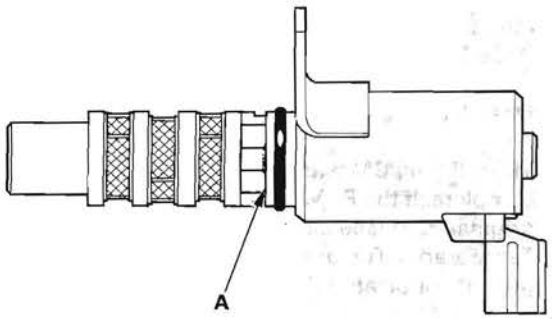

5. Connect the battery positive terminal to VTC oil control solenoid valve 2P connector terminal No. 2.

VTC OIL CONTROL SOLENOID VALVE 2P CONNECTOR

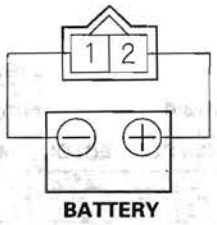

Terminal side of male terminals

6. Connect the battery negative terminal to VTC oil control solenoid valve 2P connector terminal No. 1. Appearance of inner valve (A) in the port should be at least 1/16 in. (1.2 mm). If the inner valve does not open, replace it; then go to step 7.

Open

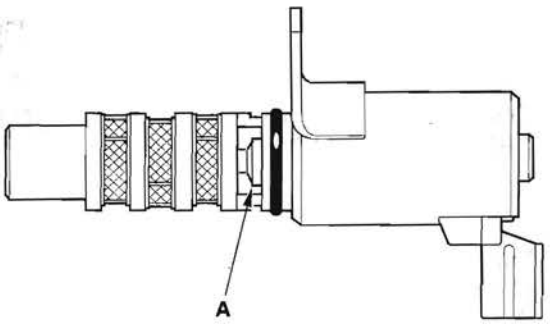

7. Replace the VTC valve O-ring (A).

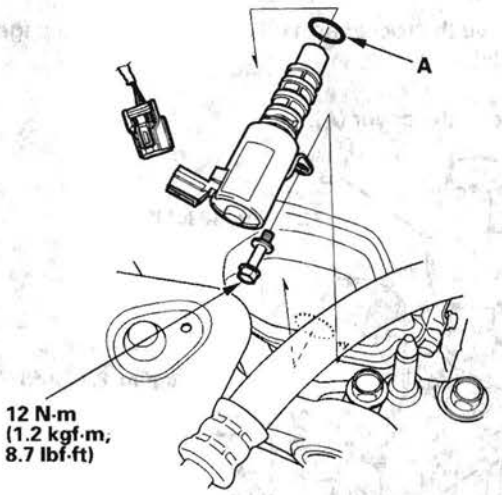

8. Coat a new O-ring with engine oil, then install it.
9. Clean and dry the mating surface of the valve.
10. Install the valve.

NOTE: Do not install the valve while wearing cloth fibrous gloves. Be careful not to contaminate the cylinder head opening.

CMP Sensor A Replacement

1. Remove the EGR valve (see page 11-364).
2. Disconnect the CMP sensor A 3P connector (A).

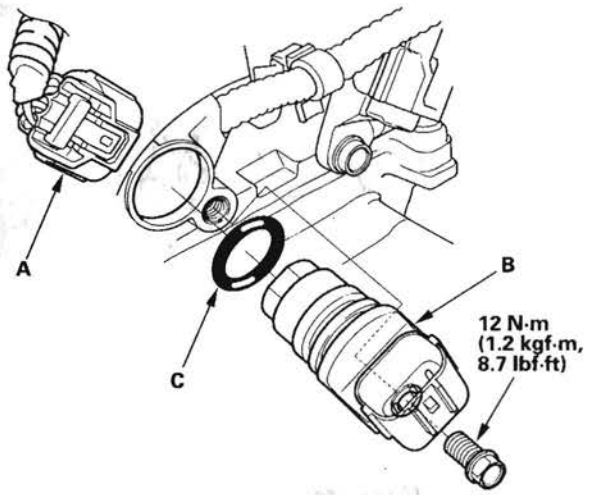

3. Remove CMP sensor A (B) from the intake camshaft side of the cylinder head.
4. Install the parts in the reverse order of removal with a new O-ring (C).

Rocker Arm Oil Control Valve Removal/Installation

1. Remove the power steering hose stay (A).

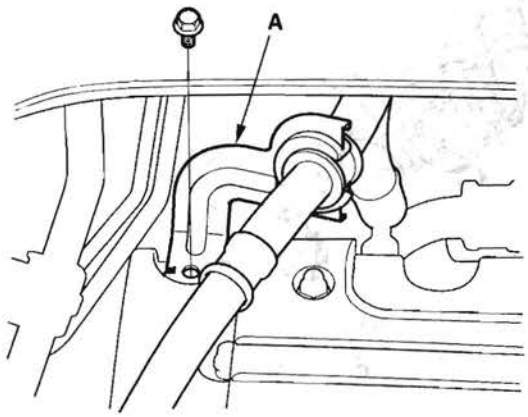

2. Disconnect the rocker arm oil control valve connector (A) and the rocker arm oil pressure switch connector (B).

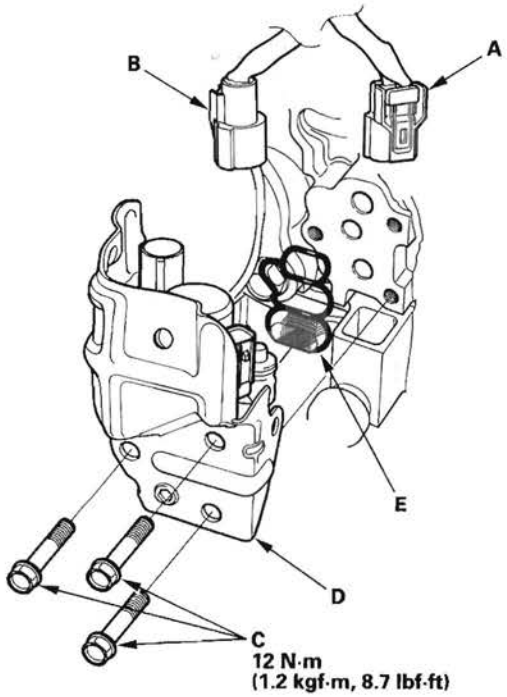

3. Remove the bolts (C).
4. Remove the rocker arm oil control valve (D).
5. Install the parts in the reverse order of removal with a new solenoid valve filter (E) and O-ring.

Rocker Arm Oil Pressure Switch Removal/Installation

1. Remove the rocker arm oil control valve (see page 11-286).
2. Remove the cover (A).

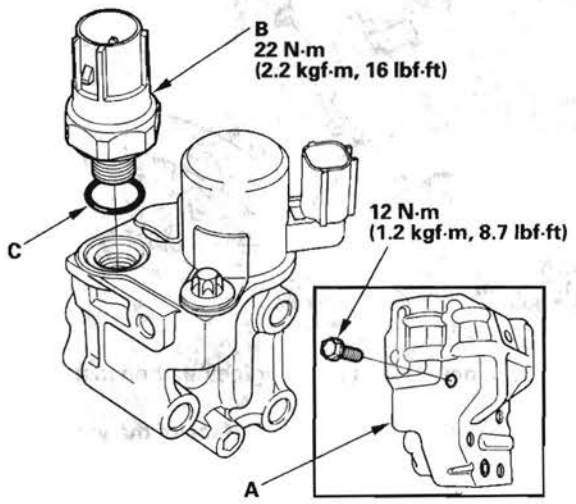

3. Remove the rocker arm oil pressure switch (B).
4. Install the parts in the reverse order of removal with a new O-ring (C).

Component Location Index

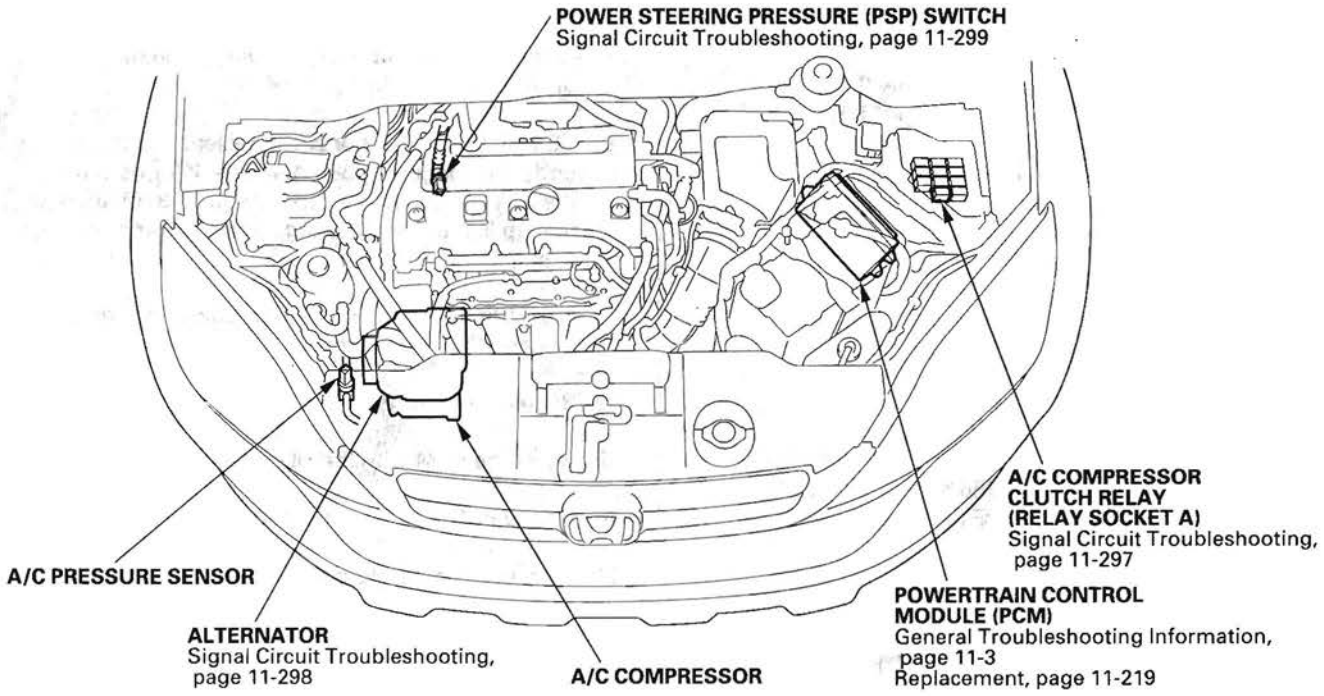

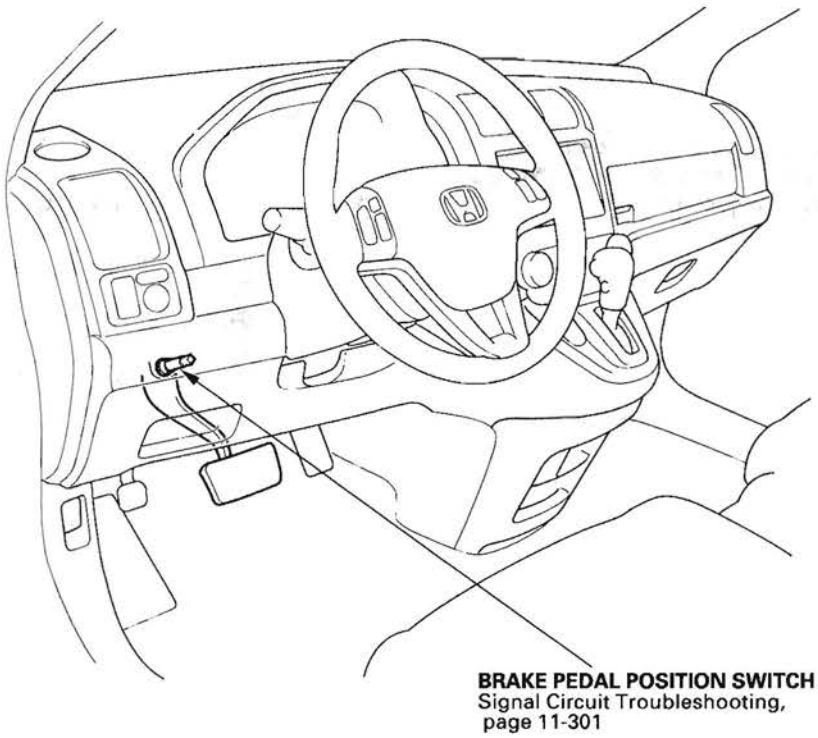

DTC Troubleshooting

DTC P0506: Idle Control System RPM Lower Than Expected

NOTE: Before you troubleshoot, record all freeze data and any on-board snapshot, and review the general troubleshooting information (see page 11-3).

1. Turn the ignition switch ON (II).
2. Clear the DTC with the HDS.
3. Start the engine. Hold the engine speed at 3,000 rpm without load (in Park or neutral) until the radiator fan comes on, then let it idle.
4. Check under these DATA LIST parameter conditions with the HDS:

   - ECT SENSOR 1 above 156 °F (70 °C)
   - IAT SENSOR above 32 °F (0 °C)
   - Vehicle speed is 0 mph (0 km/h)
   - ST FUEL TRIM between 0.69—1.47
   - FSS is CLOSED

5. Monitor the OBD STATUS for DTC P0506 in the DTCs MENU with the HDS.

   Does the screen indicate FAILED?

   YES—Go to step 6.

   NO—If the screen indicates PASSED, go to step 15. If the screen indicates EXECUTING, keep idling until a result comes on. If the screen indicates OUT OF CONDITION, go to step 4 and recheck.

6. Remove the air intake duct from the throttle body (see page 11-342).
7. Check for dirt, carbon, or damage in the throttle bore.

   Is there dirt, carbon, or damage in the throttle bore?

   YES—If there is dirt or carbon, clean the throttle body (see page 11-338). Also check for damage to the air cleaner element (see page 11-340), then go to step 9. If there is damage in the throttle bore, go to step 8.

   NO—Check the A/C system or power steering system, then go to step 9.

8. Replace the throttle body (see page 11-342).
9. Reset the PCM with the HDS.
10. Do the PCM idle learn procedure (see page 11-304).
11. Start the engine. Hold the engine speed at 3,000 rpm without load (in Park or neutral) until the radiator fan comes on, then let it idle.
12. Check under these DATA LIST parameter conditions with the HDS:

    - ECT SENSOR 1 above 156 °F (70 °C)
    - IAT SENSOR above 32 °F (0 °C)
    - Vehicle speed is 0 mph (0 km/h)
    - ST FUEL TRIM between 0.69—1.47
    - FSS is CLOSED

13. Check for Temporary DTCs or DTCs with the HDS.

    Is DTC P0506 indicated?

    YES—Go to step 19.

    NO—Go to step 14.

14. Monitor the OBD STATUS for DTC P0506 in the DTCs MENU with the HDS.

    Does the screen indicate PASSED?

    YES—Troubleshooting is complete. If any other Temporary DTCs or DTCs were indicated in step 13, go to the indicated DTC's troubleshooting. ■

    NO—If the screen indicates FAILED, go to step 19. If the screen indicates EXECUTING, keep idling until a result comes on. If the screen indicates OUT OF CONDITION, go to step 12.

15. Remove the air intake duct from the throttle body (see page 11-342).

16. Check for dirt, carbon, or damage in the throttle bore.

    Is there dirt, carbon, or damage in the throttle bore?

    YES—If there is dirt or carbon, clean the throttle body (see page 11-338). Also check for damage to the air cleaner element (see page 11-340), then go to step 9. If there is damage in the throttle bore, go to step 8.

    NO—Go to step 17.

17. Recheck with different load conditions (turn on the headlights, blower motor, rear window defogger and/or A/C, change the gear position, etc.).

18. Monitor the OBD STATUS for DTC P0506 in the DTCs MENU with the HDS.

    Does the screen indicate PASSED?

    YES—Intermittent failure, the system is OK at this time. ■

    NO—If the screen indicates FAILED, check the A/C system and/or power steering system, then go to step 1 and recheck. If the screen indicates EXECUTING, keep idling until a result comes on. If the screen indicates OUT OF CONDITION, go to step 17 and recheck.

19. Update the PCM if it does not have the latest software (see page 11-7), or substitute a known-good PCM (see page 11-8).

20. Start the engine. Hold the engine speed at 3,000 rpm without load (in Park or neutral) until the radiator fan comes on, then let it idle.

21. Check under these DATA LIST parameter conditions with the HDS:

    - ECT SENSOR 1 above 156 °F (70 °C)
    - IAT SENSOR above 32 °F (0 °C)
    - Vehicle speed is 0 mph (0 km/h)
    - ST FUEL TRIM between 0.69—1.47
    - FSS is CLOSED

22. Check for Temporary DTCs or DTCs with the HDS.

    Is DTC P0506 indicated?

    YES—Check for poor connections or loose terminals at the throttle body and the PCM. If the PCM was updated, substitute a known-good PCM (see page 11-8), then go to step 20. If the PCM was substituted, go to step 1.

    NO—Go to step 23.

23. Monitor the OBD STATUS for DTC P0506 in the DTCs MENU with the HDS.

    Does the screen indicate PASSED?

    YES—If the PCM was updated, troubleshooting is complete. If the PCM was substituted, replace the original PCM (see page 11-219). If any other Temporary DTCs or DTCs were indicated in step 22, go to the indicated DTC's troubleshooting. ■

    NO—If the screen indicates FAILED, check for poor connections or loose terminals at the throttle body and the PCM. If the PCM was updated, substitute a known-good PCM (see page 11-8), then go to step 20. If the PCM was substituted, go to step 1. If the screen indicates EXECUTING, keep idling until a result comes on. If the screen indicates OUT OF CONDITION, go to step 20.

DTC Troubleshooting (cont'd)

DTC P0507: Idle Control System RPM Higher Than Expected

NOTE: Before you troubleshoot, record all freeze data and any on-board snapshot, and review the general troubleshooting information (see page 11-3).

1. Turn the ignition switch ON (II).
2. Clear the DTC with the HDS.
3. Start the engine. Hold the engine speed at 3,000 rpm without load (in Park or neutral) until the radiator fan comes on, then let it idle.
4. Monitor the OBD STATUS for DTC P0507 in the DTCs MENU with the HDS.

   Does the screen indicate FAILED?

   YES—Go to step 5.

   NO—If the screen indicates PASSED, intermittent failure, the system is OK at this time. If the screen indicates EXECUTING, keep idling until a result comes on. If the screen indicates OUT OF CONDITION, recheck with different load conditions (electrical, A/C, gear position, etc.), then go to step 3.
5. Check for vacuum leaks at these parts:

   - PCV valve
   - PCV hose
   - EVAP canister purge valve
   - Throttle body
   - Intake manifold
   - Brake booster hose
   - Brake booster

   Are there any leaks?

   YES—Repair or replace the leaking part(s), then go to step 6.

   NO—Go to step 6.
6. Turn the ignition switch ON (II).
7. Reset the PCM with the HDS.
8. Do the PCM idle learn procedure (see page 11-304).
9. Start the engine. Hold the engine speed at 3,000 rpm without load (in Park or neutral) until the radiator fan comes on, then let it idle.
10. Check for Temporary DTCs or DTCs with the HDS.

    Is DTC P0507 indicated?

    YES—Go to step 12.

    NO—Go to step 11.
11. Monitor the OBD STATUS for DTC P0507 in the DTCs MENU with the HDS.

    Does the screen indicate PASSED?

    YES—Troubleshooting is complete. If any other Temporary DTCs or DTCs were indicated in step 10, go to the indicated DTC's troubleshooting. ■

    NO—If the screen indicates FAILED, go to step 12. If the screen indicates EXECUTING, keep idling until a result comes on. If the screen indicates OUT OF CONDITION, go to step 9.

12. Update the PCM if it does not have the latest software (see page 11-7), or substitute a known-good PCM (see page 11-8).

13. Start the engine. Hold the engine speed at 3,000 rpm without load (in Park or neutral) until the radiator fan comes on, then let it idle.

14. Check for Temporary DTCs or DTCs with the HDS.

    Is DTC P0507 indicated?

    YES—Check for poor connections or loose terminals at the throttle body and the PCM. If the PCM was updated, substitute a known-good PCM (see page 11-8), then go to step 13. If the PCM was substituted, go to step 1.

    NO—Go to step 15.

15. Monitor the OBD STATUS for DTC P0507 in the DTCs MENU with the HDS.

    Does the screen indicate PASSED?

    YES—If the PCM was updated, troubleshooting is complete. If the PCM was substituted, replace the original PCM (see page 11-219). If any other Temporary DTCs or DTCs were indicated in step 14, go to the indicated DTC's troubleshooting. ■

    NO—If the screen indicates FAILED, check for poor connections or loose terminals at the throttle body and the PCM. If the PCM was updated, substitute a known-good PCM (see page 11-8), then go to step 13. If the PCM was substituted, go to step 1. If the screen indicates EXECUTING, keep idling until a result comes on. If the screen indicates OUT OF CONDITION, go to step 13.

DTC Troubleshooting (cont'd)

DTC P0532: A/C Pressure Sensor Circuit Low Voltage

NOTE: Before you troubleshoot, record all freeze data and any on-board snapshot, and review the general troubleshooting information (see page 11-3).

1. Start the engine, and let it idle.
2. Turn the blower switch on.
3. Turn the A/C switch on.
4. Check the A/C PRESSURE SENSOR in the DATA LIST with the HDS.

   Is there about 0.3 V or less?

   YES—Go to step 5.

   NO—Intermittent failure, the system is OK at this time. Check for poor connections or loose terminals at the A/C pressure sensor and the PCM. ■
5. Turn the ignition switch OFF.
6. Disconnect the A/C pressure sensor 3P connector.
7. Turn the ignition switch ON (II).
8. Check the A/C PRESSURE SENSOR in the DATA LIST with the HDS.

   Is there about 0.3 V or less?

   YES—Go to step 10.

   NO—Go to step 9.
9. Measure voltage between A/C pressure sensor 3P connector terminals No. 1 and No. 3.

A/C PRESSURE SENSOR 3P CONNECTOR

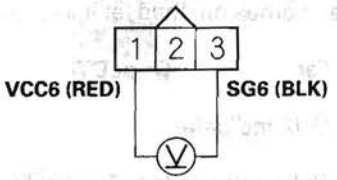

Wire side of female terminals

Is there about 5 V?

YES—Go to step 18.

NO—Go to step 14.

10. Turn the ignition switch OFF.
11. Jump the SCS line with the HDS.
12. Disconnect PCM connector A (44P).
13. Check for continuity between A/C pressure sensor 3P connector terminal No. 2 and body ground.

A/C PRESSURE SENSOR 3P CONNECTOR

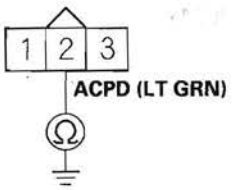

Wire side of female terminals

Is there continuity?

YES—Repair short in the wire between the PCM (A16) and the A/C pressure sensor, then go to step 20.

NO—Go to step 28.

14. Turn the ignition switch OFF.

15. Jump the SCS line with the HDS.

16. Disconnect PCM connector A (44P).

17. Check for continuity between A/C pressure sensor 3P connector terminal No. 1 and PCM connector terminal A19.

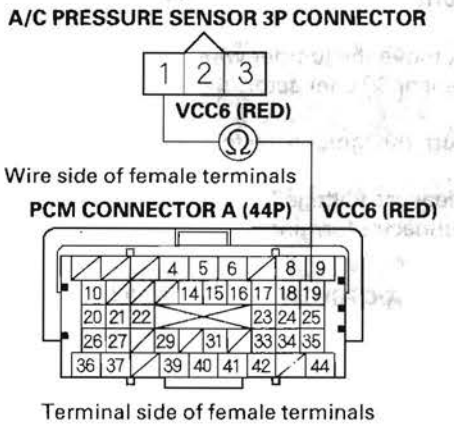

Is there continuity?

YES—Go to step 28.

NO—Repair open in the wire between the PCM (A19) and the A/C pressure sensor, then go to step 20.

18. Turn the ignition switch OFF.

19. Replace the A/C pressure sensor (see page 21-7).

20. Reconnect all connectors.

21. Turn the ignition switch ON (II).

22. Reset the PCM with the HDS.

23. Do the PCM idle learn procedure (see page 11-304).

24. Start the engine, and let it idle.

25. Turn the blower switch on.

26. Turn the A/C switch on.

27. Check for Temporary DTCs or DTCs with the HDS.

Is DTC P0532 indicated?

YES—Check for poor connections or loose terminals at the A/C pressure sensor and the PCM, then go to step 1.

NO—Troubleshooting is complete. If any other Temporary DTCs or DTCs are indicated, go to the indicated DTC's troubleshooting. ■

28. Reconnect all connectors.

29. Update the PCM if it does not have the latest software (see page 11-7), or substitute a known-good PCM (see page 11-8).

30. Start the engine, and let it idle.

31. Turn the blower switch on.

32. Turn the A/C switch on.

33. Check for Temporary DTCs or DTCs with the HDS.

Is DTC P0532 indicated?

YES—Check for poor connections or loose terminals at the A/C pressure sensor and the PCM. If the PCM was updated, substitute a known-good PCM (see page 11-8), then go to step 30. If the PCM was substituted, go to step 1.

NO—If the PCM was updated, troubleshooting is complete. If the PCM was substituted, replace the original PCM (see page 11-219). If any other Temporary DTCs or DTCs are indicated, go to the indicated DTC's troubleshooting. ■

DTC Troubleshooting (cont'd)

DTC P0533: A/C Pressure Sensor Circuit High Voltage

NOTE: Before you troubleshoot, record all freeze data and any on-board snapshot, and review the general troubleshooting information (see page 11-3).

1. Start the engine, and let it idle.
2. Turn the blower switch on.
3. Turn the A/C switch on.
4. Check the A/C PRESSURE SENSOR in the DATA LIST with the HDS.

   Is there about 4.75 V or more?

   YES—Go to step 5.

   NO—Intermittent failure, the system is OK at this time. Check for poor connections or loose terminals at the A/C pressure sensor and the PCM. ■
5. Turn the ignition switch OFF.
6. Disconnect the A/C pressure sensor 3P connector.
7. Connect A/C pressure sensor 3P connector terminals No. 2 and No. 3 with a jumper wire.

A/C PRESSURE SENSOR 3P CONNECTOR

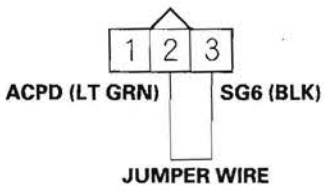

Wire side of female terminals

8. Turn the ignition switch ON (II).
9. Check the A/C PRESSURE SENSOR in the DATA LIST with the HDS.

   Is there about 4.75 V or more?

   YES—Go to step 10.

   NO—Go to step 22.
10. Turn the ignition switch OFF.
11. Remove the jumper wire from the A/C pressure sensor 3P connector.
12. Turn the ignition switch ON (II).
13. Measure voltage between A/C pressure sensor 3P connector terminals No. 1 and No. 3.

A/C PRESSURE SENSOR 3P CONNECTOR

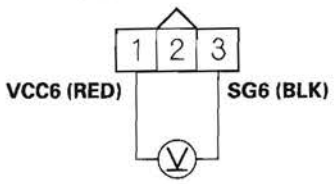

Wire side of female terminals

Is there about 5 V?

YES—Go to step 14.

NO—Go to step 18.

14. Turn the ignition switch OFF.
15. Jump the SCS line with the HDS.
16. Disconnect PCM connector A (44P).
17. Check for continuity between A/C pressure sensor 3P connector terminal No. 2 and PCM connector terminal A16.

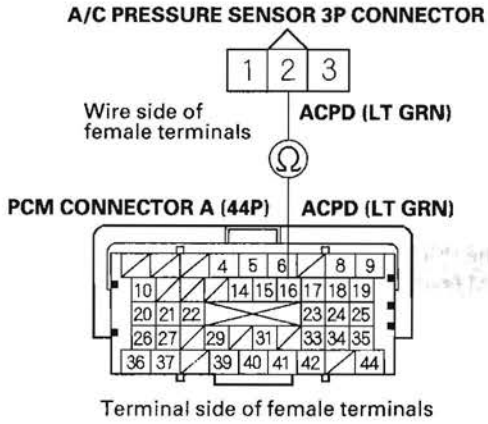

Is there continuity?

YES—Go to step 32.

NO—Repair open in the wire between the PCM (A16) and the A/C pressure sensor, then go to step 24.

18. Turn the ignition switch OFF.
19. Jump the SCS line with the HDS.
20. Disconnect PCM connector A (44P).
21. Check for continuity between A/C pressure sensor 3P connector terminal No. 3 and PCM connector terminal A9.

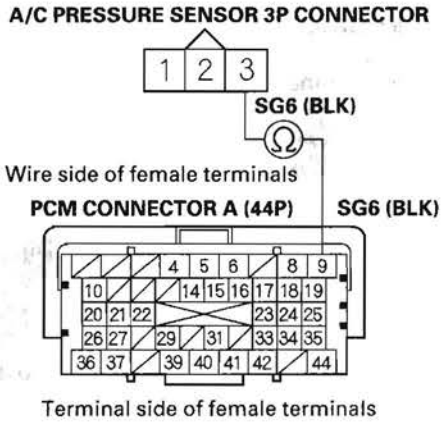

Is there continuity?

YES—Go to step 32.

NO—Repair open in the wire between the PCM (A9) and the A/C pressure sensor, then go to step 24.

(cont'd)

DTC Troubleshooting (cont'd)

22. Turn the ignition switch OFF.
23. Replace the A/C pressure sensor (see page 21-7).
24. Reconnect all connectors.
25. Turn the ignition switch ON (II).
26. Reset the PCM with the HDS.
27. Do the PCM idle learn procedure (see page 11-304).
28. Start the engine, and let it idle.
29. Turn the blower switch on.
30. Turn the A/C switch on.
31. Check for Temporary DTCs or DTCs with the HDS.

    Is DTC P0533 indicated?

    YES—Check for poor connections or loose terminals at the A/C pressure sensor and the PCM, then go to step 1.

    NO—Troubleshooting is complete. If any other Temporary DTCs or DTCs are indicated, go to the indicated DTC's troubleshooting. ■

32. Reconnect all connectors.
33. Update the PCM if it does not have the latest software (see page 11-7), or substitute a known-good PCM (see page 11-8).
34. Start the engine, and let it idle.
35. Turn the blower switch on.
36. Turn the A/C switch on.
37. Check for Temporary DTCs or DTCs with the HDS.

    Is DTC P0533 indicated?

    YES—Check for poor connections or loose terminals at the A/C pressure sensor and the PCM. If the PCM was updated, substitute a known-good PCM (see page 11-8), then go to step 34. If the PCM was substituted, go to step 1.

    NO—If the PCM was updated, troubleshooting is complete. If the PCM was substituted, replace the original PCM (see page 11-219). If any other Temporary DTCs or DTCs are indicated, go to the indicated DTC's troubleshooting. ■

A/C Signal Circuit Troubleshooting

1. Start the engine, and let it idle.
2. Turn the blower switch on.
3. Turn the A/C switch on.
4. Check the A/C CLUTCH in the DATA LIST with the HDS.

   Does it indicate ON?

   YES—Go to step 5.

   NO—Do the A/C system test (see page 21-72). ■
5. Check the A/C system.

   Does the A/C system operate?

   YES—The air conditioning system circuit is OK. ■

   NO—Go to step 6.
6. Turn the ignition switch OFF.
7. Turn the ignition switch ON (II).
8. Activate the A/C CLUTCH in the INSPECTION MENU with the HDS.

   Is there a clicking noise from the A/C compressor clutch?

   YES—Do the A/C system test (see page 21-72). ■

   NO—Go to step 9.
9. Turn the ignition switch OFF.
10. Jump the SCS line with the HDS.
11. Disconnect PCM connector A (44P).
12. Turn the ignition switch ON (II).
13. Momentarily connect PCM connector terminal A14 to body ground with a jumper wire several times.

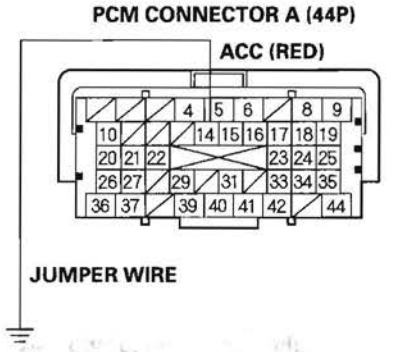

Terminal side of female terminals

Is there a clicking noise from the A/C compressor clutch?

YES—Update the PCM if it does not have the latest software (see page 11-7), or substitute a known-good PCM (see page 11-8), then recheck. If the symptom/indication goes away with a known-good PCM, replace the original PCM (see page 11-219). ■

NO—Check for poor connections or loose terminals at the A/C compressor clutch relay and the PCM. If the connections are OK, check the A/C compressor clutch relay (see page 22-66). Then repair open in the wire between the PCM (A14) and the A/C compressor clutch relay and the other A/C systems. ■

Alternator FR Signal Circuit Troubleshooting

1. Start the engine, and let it idle.
2. Monitor the ALTERNATOR in the DATA LIST with the HDS.
3. Check if the indicated percentage varies when the headlight switch is turned on.

   Does the percentage vary?

   YES—The alternator signal circuit is OK. ■

   NO—Go to step 4.
4. Turn the headlight switch and ignition switch OFF.
5. Jump the SCS line with the HDS.
6. Disconnect the alternator 4P connector.
7. Disconnect PCM connector B (44P).
8. Check for continuity between body ground and PCM connector terminal B43.

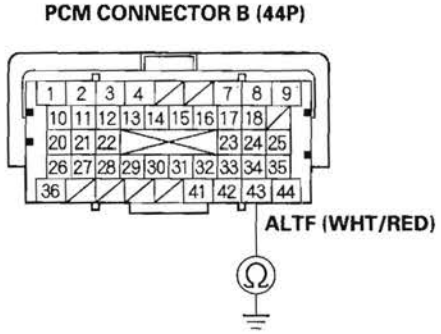

Terminal side of female terminals

Is there continuity?

YES—Repair short in the wire between the PCM (B43) and the alternator. ■

NO—Update the PCM if it does not have the latest software (see page 11-7), or substitute a known-good PCM (see page 11-8), then recheck. If the symptom/indication goes away with a known-good PCM, replace the original PCM (see page 11-219). ■

PSP Switch Signal Circuit Troubleshooting

1. Start the engine, and let it idle.
2. Align the steering wheel straight ahead.
3. Check the PSP SWITCH in the DATA LIST with the HDS.

   Does it indicate ON?

   YES—Go to step 4.

   NO—Go to step 14.
4. Turn the steering wheel to the full lock position.
5. Check the PSP SWITCH in the DATA LIST with the HDS.

   Does it change to OFF?

   YES—The PSP switch signal circuit is OK.■

   NO—Go to step 6.
6. Turn the ignition switch OFF.
7. Disconnect the PSP switch 2P connector.
8. Start the engine.
9. Check the PSP SWITCH in the DATA LIST with the HDS.

   Does it change to OFF?

   YES—Replace the PSP switch (see page 17-13).■

   NO—Go to step 10.
10. Turn the ignition switch OFF.
11. Jump the SCS line with the HDS.
12. Disconnect PCM connector A (44P).
13. Check for continuity between PSP switch 2P connector terminal No. 1 and body ground.

PSP SWITCH 2P CONNECTOR

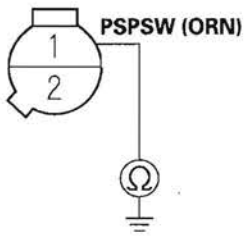

Wire side of female terminals

Is there continuity?

YES—Repair short in the wire between the PCM (A22) and the PSP switch.■

NO—Update the PCM if it does not have the latest software (see page 11-7), or substitute a known-good PCM (see page 11-8), then recheck. If the symptom/indication goes away with a known-good PCM, replace the original PCM (see page 11-219).■

14. Turn the ignition switch OFF.
15. Disconnect the PSP switch 2P connector.
16. Connect PSP switch 2P connector terminals No. 1 and No. 2 with a jumper wire, then start the engine.

PSP SWITCH 2P CONNECTOR



Wire side of female terminals

(cont'd)

PSP Switch Signal Circuit Troubleshooting (cont'd)

17. Check the PSP SWITCH in the DATA LIST with the HDS.

    Does it change to ON?

    YES—Replace the PSP switch (see page 17-13). ■

    NO—Go to step 18.

18. Turn the ignition switch OFF.

19. Remove the jumper wire from the PSP switch 2P connector.

20. Jump the SCS line with the HDS.

21. Disconnect PCM connector A (44P).

22. Connect PSP switch 2P connector terminal No. 1 to body ground with a jumper wire.

PSP SWITCH 2P CONNECTOR

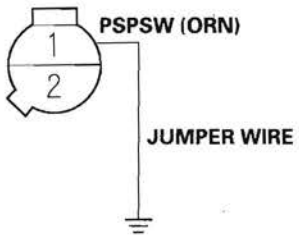

Wire side of female terminals

23. Check for continuity between body ground and PCM connector terminal A22.

PCM CONNECTOR A (44P)

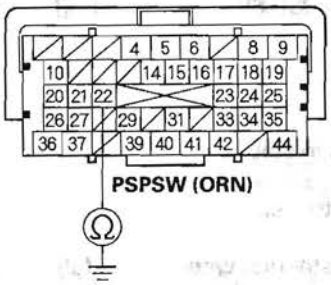

Terminal side of female terminals

Is there continuity?

YES—Go to step 24.

NO—Repair open in the wire between the PSP switch and the PCM (A22). ■

24. Check for continuity between PSP switch 2P connector terminal No. 2 and body ground.

PSP SWITCH 2P CONNECTOR

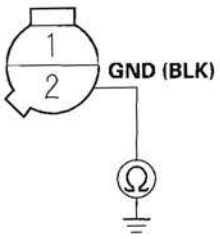

Wire side of female terminals

Is there continuity?

YES—Update the PCM if it does not have the latest software (see page 11-7), or substitute a known-good PCM (see page 11-8), then recheck. If the symptom/indication goes away with a known-good PCM, replace the original PCM (see page 11-219). ■

NO—Repair open in the wire between the PSP switch and G401 (see page 22-22). ■

Brake Pedal Position Switch Signal Circuit Troubleshooting

1. Turn the ignition switch ON (II).
2. Check the BRAKE SWITCH in the DATA LIST with the HDS.

   Does it indicate OFF?

   YES—Go to step 3.

   NO—Inspect the brake pedal position switch (see page 19-6). ■
3. Press the brake pedal, and check the BRAKE SWITCH in the DATA LIST with the HDS.

   Does it change to ON?

   YES—The brake pedal position switch signal circuit (BKSW line) is OK. ■

   NO—Go to step 4.
4. Turn the ignition switch OFF.
5. Jump the SCS line with the HDS.
6. Disconnect the brake pedal position switch 4P connector.
7. Disconnect PCM connector A (44P).
8. Check for continuity between PCM connector terminal A40 and body ground.

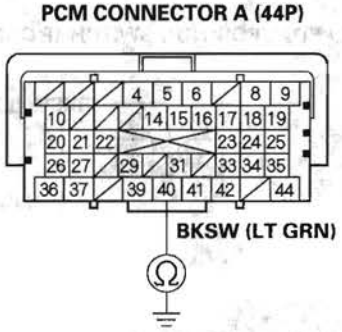

Terminal side of female terminals

Is there continuity?

YES—Repair short in the wire between the PCM (A40) and the No. 12 HORN, STOP (15 A) fuse. Replace the No. 12 HORN, STOP (15 A) fuse. ■

NO—Go to step 9.

(cont'd)

Brake Pedal Position Switch Signal Circuit Troubleshooting (cont'd)

9. Connect brake pedal position switch 4P connector terminal No. 2 to body ground with a jumper wire.

BRAKE PEDAL POSITION SWITCH 4P CONNECTOR

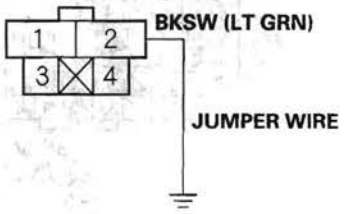

Wire side of female terminals

10. Check for continuity between PCM connector terminal A40 and body ground.

PCM CONNECTOR A (44P)

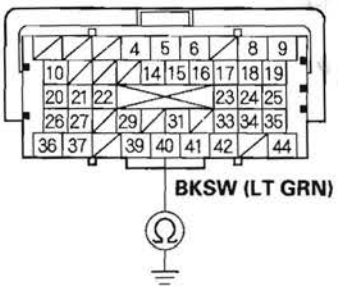

Terminal side of female terminals

Is there continuity?

YES—Repair open in the wire between the brake pedal position switch and the No. 12 HORN, STOP (15 A) fuse. Inspect the brake pedal position switch (see page 19-6). ■

NO—Repair open in the wire between the PCM (A40) and the brake pedal position switch. ■

Idle Speed Inspection

NOTE:
- Before checking the idle speed, check these items:
  - The malfunction indicator lamp (MIL) has not been reported on, and there are no DTCs.
  - Ignition timing
  - Spark plugs
  - Air cleaner
  - PCV system
- Apply the parking brake (check the headlight OFF).

1. Disconnect the evaporative emission (EVAP) canister purge valve connector.

2. Connect the HDS to the data link connector (DLC) (A) located under the driver's side of the dashboard.

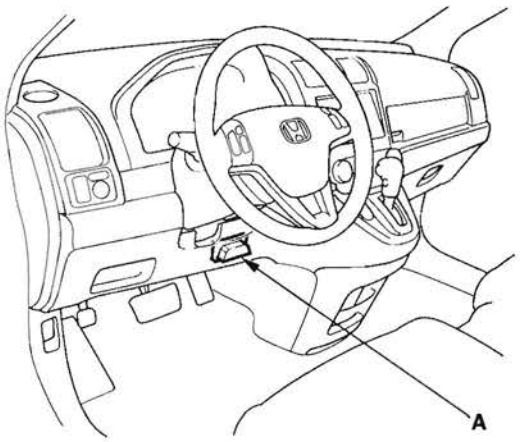

3. Start the engine. Hold the engine speed at 3,000 rpm without load (in Park or neutral) until the radiator fan comes on, then let it idle.

4. Check the idle speed without load conditions: headlights, blower fan, radiator fan, and air conditioner off.

   Idle speed should be: 650±50 rpm (in Park or neutral)

5. Let the engine idle for 1 minute with high electric load (A/C switch on, temperature set to max cool, blower fan on High, and headlights on high beam).

   Idle speed should be: 700±50 rpm (in Park or neutral)

   NOTE: If the idle speed is not within specification, do the PCM idle learn procedure (see page 11-304). If the idle speed is still not within specification, go to symptom troubleshooting.

6. Reconnect the EVAP canister purge valve connector.

PCM Idle Learn Procedure

The idle learn procedure must be done so the PCM can learn the engine idle characteristics.

Do the idle learn procedure whenever you do any of these actions:

- Replace PCM.
- Reset PCM.
- Update PCM.
- Replace or clean the throttle body.
- When the engine or transmission is disassembled.

NOTE: Erasing DTCs with the HDS does not require you to do the idle learn procedure.

Procedure

1. Make sure all electrical items (A/C, audio, lights, etc.) are off.
2. Reset the PCM with the HDS.
3. Turn the ignition switch ON (II), and wait for 2 seconds.
4. Start the engine. Hold the engine speed at 3,000 rpm without load (in Park or neutral) until the radiator fan comes on, or until the engine coolant temperature reaches 194 °F (90 °C).
5. Let the engine idle for about 5 minutes with the throttle fully closed.

   NOTE: If the radiator fan comes on, do not include its running time in the 5 minutes.
6. Verify on the HDS data list that the idle learn procedure is complete.

Component Location Index

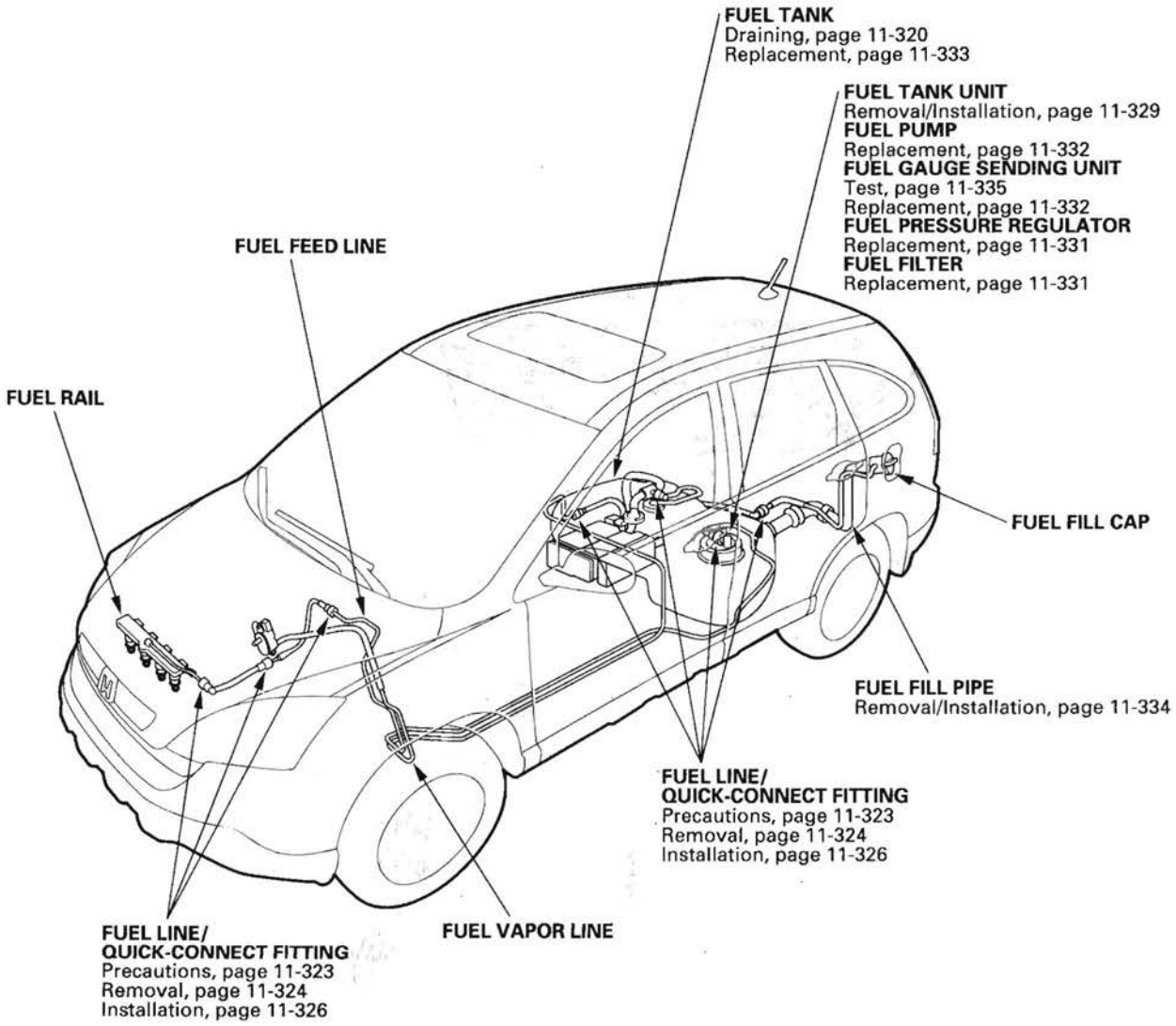

(cont'd)

Component Location Index (cont'd)

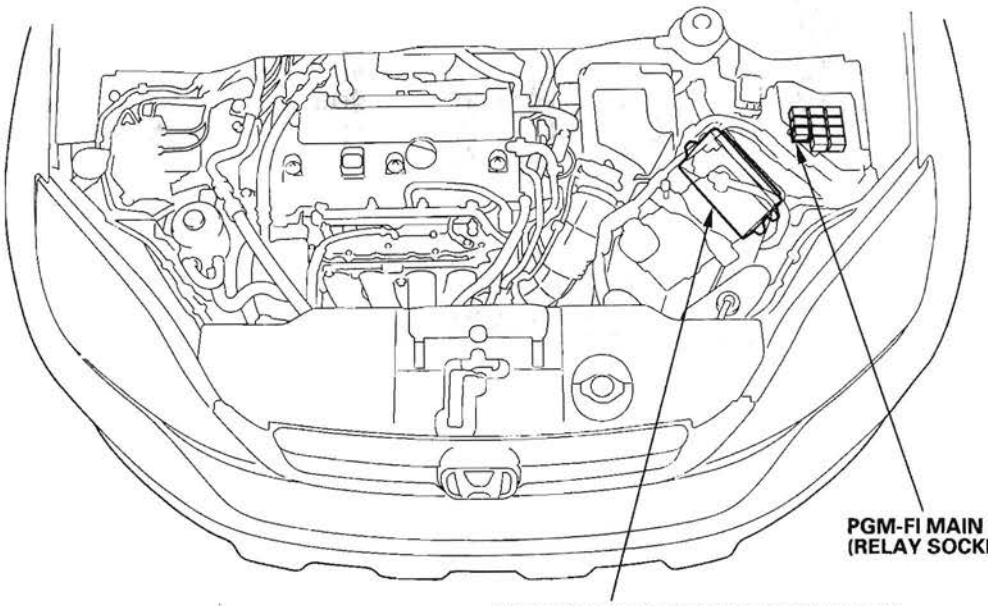

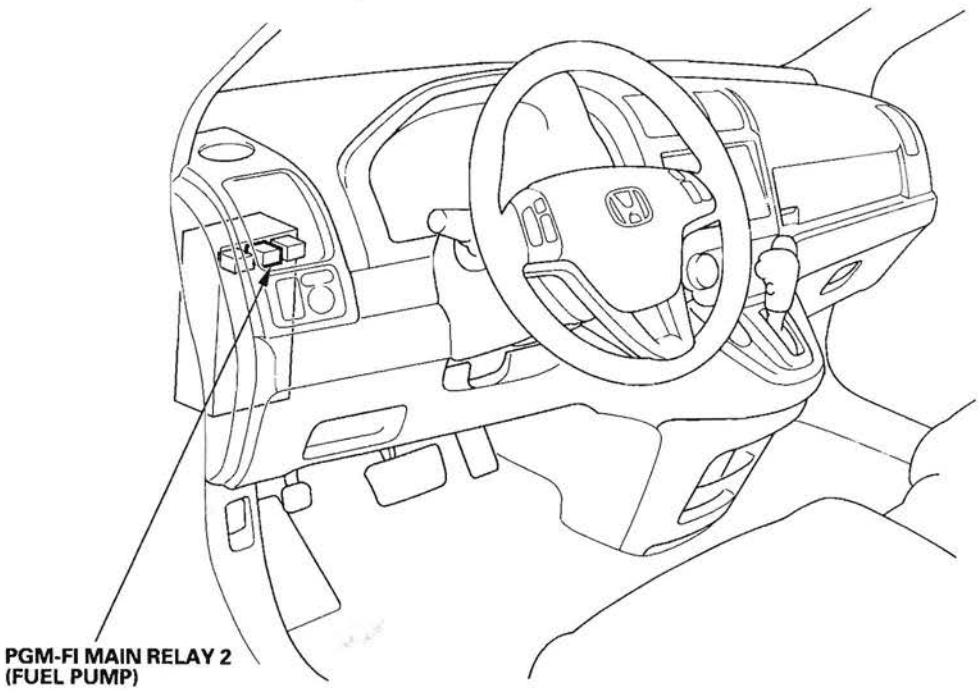



DTC Troubleshooting

DTC P0461: Fuel Level Sensor (Fuel Gauge Sending Unit) Range/Performance Problem

NOTE:
- Before you troubleshoot, record all freeze data and any on-board snapshot, and review the general troubleshooting information (see page 11-3).
- Because it requires 162 miles (260 km) of driving without refueling to complete this diagnosis, DTC P0461 cannot be duplicated during this troubleshooting.

1. Test the fuel gauge sending unit (see page 11-335).

   Is the fuel gauge sending unit OK?

   YES—Check for poor connections or loose terminals at the fuel gauge sending unit and the gauge control module. ■

   NO—Replace the fuel gauge sending unit (see page 11-332), then go to step 2.

2. Turn the ignition switch ON (II).

3. Reset the PCM with the HDS.

4. Do the PCM idle learn procedure (see page 11-304).

5. Check for Temporary DTCs or DTCs with the HDS.

   Are any Temporary DTCs or DTCs indicated?

   YES—If DTC P0461 is indicated, check for poor connections or loose terminals at the fuel gauge sending unit and the gauge control module, then go to step 1. If any other Temporary DTCs or DTCs are indicated, go to the indicated DTC's troubleshooting.

   NO—Troubleshooting is complete. ■

DTC Troubleshooting (cont'd)

DTC P0462: Fuel Level Sensor (Fuel Gauge Sending Unit) Circuit Low Voltage

NOTE: Before you troubleshoot, record all freeze data and any on-board snapshot, and review the general troubleshooting information (see page 11-3).

1. Turn the ignition switch ON (II).
2. Clear the DTC with the HDS, and wait 5 seconds.
3. Check for Temporary DTCs or DTCs with the HDS.

   Is DTC P0462 indicated?

   YES—Go to step 4.

   NO—Intermittent failure, the system is OK at this time. Check for poor connections or loose terminals at the gauge control module and the fuel gauge sending unit.■
4. Turn the ignition switch OFF.
5. Fold the left side rear seat forward, and pull back the carpet to expose the access panel.
6. Remove the access panel from the floor.
7. Disconnect the fuel tank unit 4P connector.
8. Turn the ignition switch ON (II).
9. Clear the DTC with the HDS, and wait 5 seconds.
10. Check for Temporary DTCs or DTCs with the HDS.

    Is DTC P0463 indicated?

    YES—Replace the fuel gauge sending unit (see page 11-332), then go to step 22.

    NO—Go to step 11.
11. Turn the ignition switch OFF.
12. Remove the gauge control module (see page 22-248).
13. Disconnect the gauge control module 36P connector.
14. Check for continuity between fuel tank unit 4P connector terminal No. 1 and body ground.

FUEL TANK UNIT 4P CONNECTOR

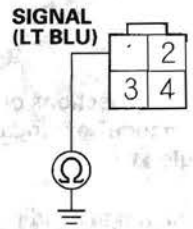

Wire side of female terminals

Is there continuity?

YES—Repair short in the wire between the gauge control module (signal line) and the fuel gauge sending unit, then go to step 23.

NO—Go to step 15.

15. Reconnect the gauge control module 36P connector.
16. Remove the fuel tank unit (see page 11-329).
17. Connect the fuel tank unit 4P connector.
18. Turn the ignition switch ON (II).
19. Clear the DTC with the HDS.

20. Set the float (A) to the empty position (B).

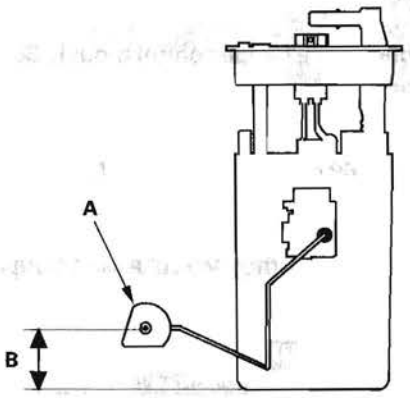

21. Check the fuel gauge.

    Does the gauge move to the empty position?

    YES—Go to step 29.

    NO—Replace the gauge control module (see page 22-248), then go to step 22.

22. Turn the ignition switch OFF.

23. Reconnect all connectors.

24. Install the parts in the reverse order of removal.

25. Turn the ignition switch ON (II).

26. Reset the PCM with the HDS.

27. Do the PCM idle learn procedure (see page 11-304).

28. Check for Temporary DTCs or DTCs with the HDS.

    Is DTC P0462 indicated?

    YES—Check for poor connections or loose terminals at the gauge control module and the fuel gauge sending unit, then go to step 1.

    NO—Troubleshooting is complete. If any other Temporary DTCs or DTCs are indicated, go to the indicated DTC's troubleshooting. ■

29. Reconnect all connectors.

30. Update the PCM if it does not have the latest software (see page 11-7), or substitute a known-good PCM (see page 11-8).

31. Check for Temporary DTCs or DTCs with the HDS.

    Is DTC P0462 indicated?

    YES—Check for poor connections or loose terminals at the gauge control module and the fuel gauge sending unit. If the PCM was updated, substitute a known-good PCM (see page 11-8), then recheck. If the PCM was substituted, go to step 1.

    NO—If the PCM was updated, troubleshooting is complete. If the PCM was substituted, replace the original PCM (see page 11-219). If any other Temporary DTCs or DTCs are indicated, go to the indicated DTC's troubleshooting. ■

DTC Troubleshooting (cont'd)

DTC P0463: Fuel Level Sensor (Fuel Gauge Sending Unit) Circuit High Voltage

NOTE: Before you troubleshoot, record all freeze data and any on-board snapshot, and review the general troubleshooting information (see page 11-3).

1. Turn the ignition switch ON (II).
2. Clear the DTC with the HDS, and wait for 5 seconds.
3. Check for Temporary DTCs or DTCs with the HDS.

   Is DTC P0463 indicated?

   YES—Go to step 4.

   NO—Intermittent failure, the system is OK at this time. Check for poor connections or loose terminals at the gauge control module and the fuel gauge sending unit. ■
4. Turn the ignition switch OFF.
5. Fold the left side rear seat forward, and pull back the carpet to expose the access panel.
6. Remove the access panel from the floor.
7. Disconnect the fuel tank unit 4P connector.
8. Connect fuel tank unit 4P connector terminal No. 3 to body ground with a jumper wire.

FUEL TANK UNIT 4P CONNECTOR

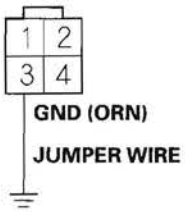

Wire side of female terminals

9. Remove the gauge control module (see page 22-248).
10. Disconnect the gauge control module 36P connector.
11. Check for continuity between gauge control module 36P connector terminal No. 32 and body ground.

GAUGE CONTROL MODULE 36P CONNECTOR

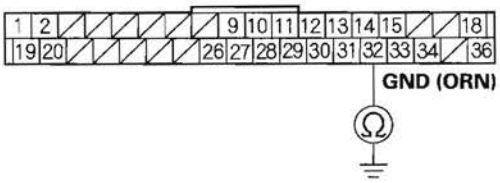

Wire side of female terminals

Is there continuity?

YES—Go to step 12.

NO—Repair open in the wire between the gauge control module (GND line) and the fuel gauge sending unit, then go to step 24.

12. Connect fuel tank unit 4P connector terminal No. 1 to body ground with a jumper wire.

FUEL TANK UNIT 4P CONNECTOR

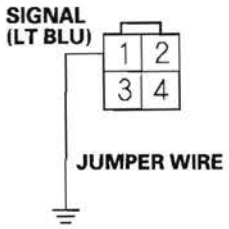

Wire side of female terminals

13. Check for continuity between gauge control module 36P connector terminal No. 31 and body ground.

GAUGE CONTROL MODULE 36P CONNECTOR

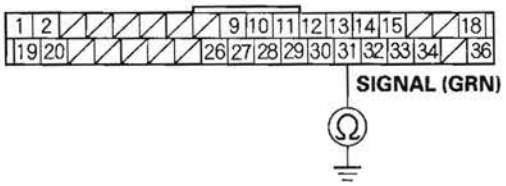

Wire side of female terminals

Is there continuity?

YES—Go to step 14.

NO—Repair open in the wire between the gauge control module (signal line) and the fuel gauge sending unit, then go to step 24.

14. Remove the jumper wire from the fuel tank unit 4P connector.

15. Remove the fuel tank unit (see page 11-329).

16. Test the fuel gauge sending unit (see page 11-335).

Is the fuel gauge sending unit OK?

YES—Go to step 17.

NO—Replace the fuel gauge sending unit (see page 11-332), then go to step 23.

17. Connect the fuel tank unit 4P connector.

18. Reconnect the gauge control module 36P connector.

19. Turn the ignition switch ON (II).

20. Clear the DTC with the HDS.

21. Set the float (A) to the full position (B).

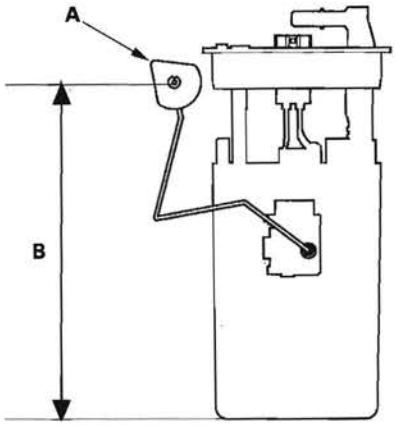

22. Check the fuel gauge.

Does the gauge move to the full position?

YES—Go to step 30.

NO—Replace the gauge control module (see page 22-248), then go to step 23.

(cont'd)

DTC Troubleshooting (cont'd)

23. Turn the ignition switch OFF.
24. Reconnect all connectors.
25. Install the parts in the reverse order of removal.
26. Turn the ignition switch ON (II).
27. Reset the PCM with the HDS.
28. Do the PCM idle learn procedure (see page 11-304).
29. Check for Temporary DTCs or DTCs with the HDS.

    Is DTC P0463 indicated?

    YES—Check for poor connections or loose terminals at the gauge control module and the fuel gauge sending unit, then go to step 1.

    NO—Troubleshooting is complete. If any other Temporary DTCs or DTCs are indicated, go to the indicated DTC's troubleshooting. ■
30. Reconnect all connectors.
31. Update the PCM if it does not have the latest software (see page 11-7), or substitute a known-good PCM (see page 11-8).
32. Check for Temporary DTCs or DTCs with the HDS.

    Is DTC P0463 indicated?

    YES—Check for poor connections or loose terminals at the gauge control module and the fuel gauge sending unit. If the PCM was updated, substitute a known-good PCM (see page 11-8), then recheck. If the PCM was substituted, go to step 1.

    NO—If the PCM was updated, troubleshooting is complete. If the PCM was substituted, replace the original PCM (see page 11-219). If any other Temporary DTCs or DTCs are indicated, go to the indicated DTC's troubleshooting. ■

Fuel Pump Circuit Troubleshooting

If you suspect a problem with the fuel pump, check that the fuel pump actually runs; when it is on, you will hear some noise if you listen to the fuel fill port with the fuel fill cap removed. The fuel pump should run for 2 seconds when the ignition switch is first turned on. If the fuel pump does not make noise, check as follows:

1. Turn the ignition switch OFF.
2. Remove the under-dash fuse/relay box (see page 22-64), then remove PGM-FI main relay 2 (FUEL PUMP) (A) from the under-dash fuse/relay box.

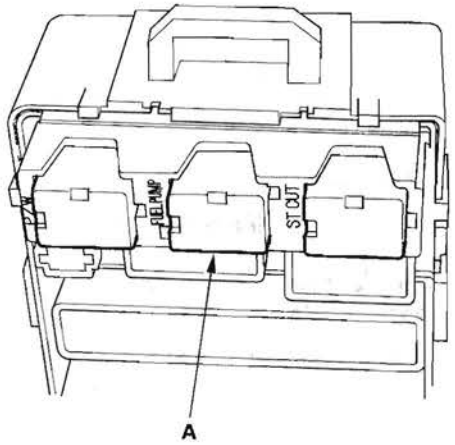

3. Reinstall the under-dash fuse/relay box.
4. Turn the ignition switch ON (II).
5. Measure voltage between PGM-FI main relay 2 (FUEL PUMP) 4P connector terminal No. 3 and body ground.

PGM-FI MAIN RELAY 2 (FUEL PUMP) 4P CONNECTOR

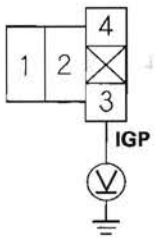

Terminal side of female terminals

Is there battery voltage?

YES—Go to step 13.

NO—Go to step 6.

6. Turn the ignition switch OFF.
7. Disconnect under-hood fuse/relay box connector D (8P).
8. Jump the SCS line with the HDS.
9. Disconnect PCM connector A (44P).
10. Disconnect under-dash fuse/relay box connector G (21P).
11. Connect under-dash fuse/relay box connector G (21P) terminal No. 4 to body ground with a jumper wire.

UNDER-DASH FUSE/RELAY BOX CONNECTOR G (21P)

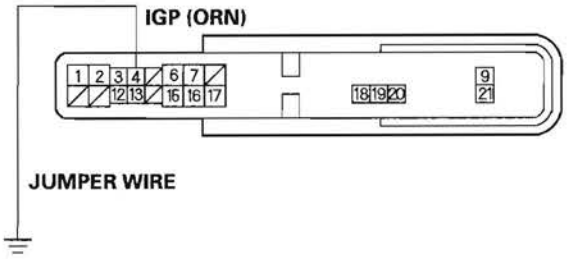

Wire side of female terminals

12. Check for continuity between under-hood fuse/relay box connector D (8P) terminal No. 6 and body ground.

UNDER-HOOD FUSE/RELAY BOX CONNECTOR D (8P)

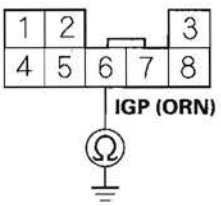

Wire side of female terminals

(cont'd)

Fuel Pump Circuit Troubleshooting (cont'd)

Is there continuity?

YES—
- Replace PGM-FI main relay 1. ■
- If needed, replace the under-hood fuse/relay box (see page 22-63). ■

NO—Repair open in the wire between the under-hood fuse/relay box and the under-dash fuse/relay box. ■

13. Measure voltage between PGM-FI main relay 2 (FUEL PUMP) 4P connector terminal No. 1 and body ground.

PGM-FI MAIN RELAY 2 (FUEL PUMP) 4P CONNECTOR

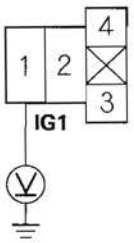

Terminal side of female terminals

Is there battery voltage?

YES—Go to step 14.

NO—
- Check the No. 2 FUEL PUMP (15 A) fuse in the under-dash fuse/relay box. ■
- If needed, replace the under-dash fuse/relay box (see page 22-64). ■

14. Turn the ignition switch OFF.

15. Connect PGM-FI main relay 2 (FUEL PUMP) 4P connector terminal No. 4 to body ground with a jumper wire.

PGM-FI MAIN RELAY 2 (FUEL PUMP) 4P CONNECTOR

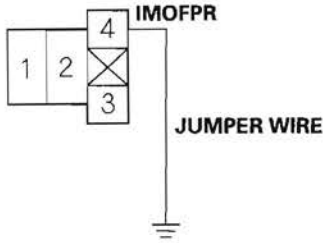

Terminal side of female terminals

16. Jump the SCS line with the HDS.

17. Disconnect PCM connector A (44P).

18. Check for continuity between body ground and PCM connector terminal A15.

PCM CONNECTOR A (44P)

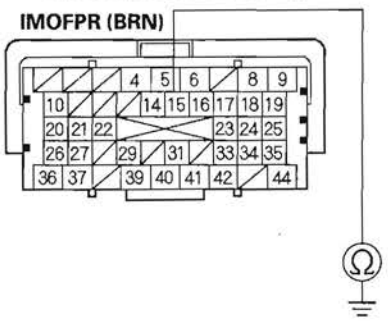

Terminal side of female terminals

Is there continuity?

YES—Go to step 19.

NO—Repair open in the wire between PGM-FI main relay 2 (FUEL PUMP) and the PCM (A15). ■

19. Remove the under-dash fuse/relay box (see page 22-64), then reinstall PGM-FI main relay 2 (FUEL PUMP).

20. Reinstall the under-dash fuse/relay box (see page 22-64).

21. Connect PCM connector terminal A6 to body ground with a jumper wire.

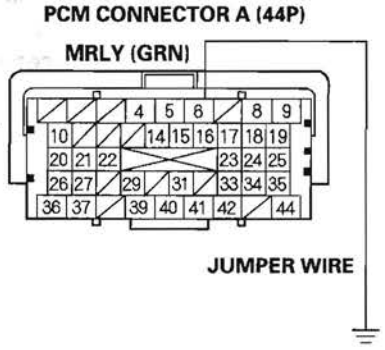

Terminal side of female terminals

22. Turn the ignition switch ON (II).

23. Measure voltage between PCM connector terminal A15 and body ground.

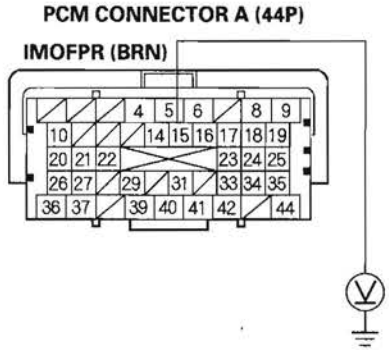

Terminal side of female terminals

Is there battery voltage?

YES—Go to step 24.

NO—Replace PGM-FI main relay 2 (FUEL PUMP). ■

24. Turn the ignition switch OFF.

25. Reconnect PCM connector A (44P).

26. Turn the ignition switch ON (II), and measure voltage between under-dash fuse/relay box connector F (34P) terminal No. 10 and body ground within 2 seconds.

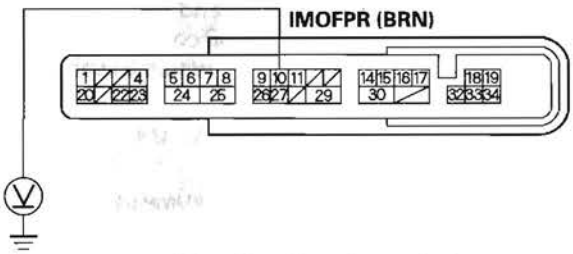

Wire side of female terminals

Is there battery voltage?

YES—Update the PCM if it does not have the latest software (see page 11-7), or substitute a known-good PCM (see page 11-8), then recheck. If the symptom/indication goes away with a known-good PCM, replace the original PCM (see page 11-219). ■

NO—Go to step 27.

27. Turn the ignition switch ON (II), and measure voltage between under-dash fuse/relay box connector F (34P) terminal No. 10 and body ground after 2 seconds.

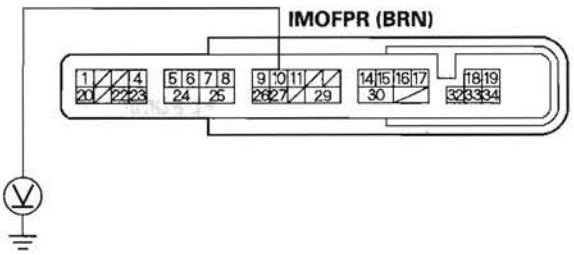

Wire side of female terminals

Is there battery voltage?

YES—Go to step 28.

NO—If needed, replace the under-dash fuse/relay box (see page 22-64), then go to step 28.

(cont'd)

Fuel Pump Circuit Troubleshooting (cont'd)

28. Turn the ignition switch OFF.
29. Fold the left side rear seat forward, and pull back the carpet to expose the access panel.
30. Remove the access panel from the floor.
31. Turn the ignition switch ON (II), and measure voltage between fuel tank unit 4P connector terminal No. 2 and body ground within 2 seconds.

FUEL TANK UNIT 4P CONNECTOR

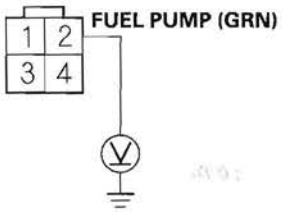

Wire side of female terminals

Is there battery voltage?

YES—Go to step 36.

NO—Go to step 32.

32. Turn the ignition switch OFF.
33. Remove PGM-FI main relay 2 (FUEL PUMP).
34. Connect PGM-FI main relay 2 (FUEL PUMP) 4P connector terminals No. 1 and No. 2 with a jumper wire.

PGM-FI MAIN RELAY 2 (FUEL PUMP) 4P CONNECTOR

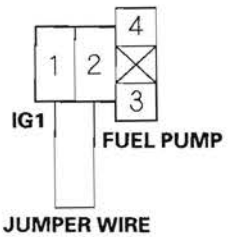

Terminal side of female terminals

35. Turn the ignition switch ON (II), and measure voltage between fuel tank unit 4P connector terminal No. 2 and body ground within 2 seconds.

FUEL TANK UNIT 4P CONNECTOR

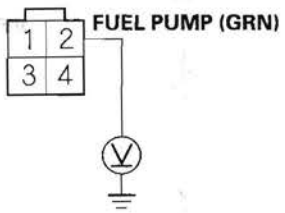

Wire side of female terminals

Is there battery voltage?

YES—Replace PGM-FI main relay 2 (FUEL PUMP).■

NO—Repair open in the wire between PGM-FI main relay 2 (FUEL PUMP) and the fuel tank unit 4P connector.■

36. Turn the ignition switch OFF.
37. Check for continuity between fuel tank unit 4P connector terminal No. 4 and body ground.

FUEL TANK UNIT 4P CONNECTOR

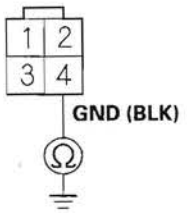

Wire side of female terminals

Is there continuity?

YES—Replace the fuel pump (see page 11-332).■

NO—Repair open in the wire between the fuel tank unit 4P connector and G602 (see page 22-36).■

Fuel Pressure Relieving

Before disconnecting fuel lines or hoses, relieve pressure from the system by disabling the fuel pump and then disconnecting the fuel tube/quick connect fitting in the engine compartment.

With the HDS

1. Make sure you have the anti-theft code for the audio system.
2. Remove the fuel fill cap, to relieve the pressure in the fuel tank.
3. Turn the ignition switch ON (II).
4. From the INSPECTION MENU of the HDS, select Fuel Pump OFF, then start the engine, and let it idle until it stalls.

   NOTE:
   - Do not allow the engine to idle above 1,000 rpm or the PCM will continue to operate the fuel pump.
   - A DTC or a Temporary DTC may be set during this procedure. Check for DTCs, and clear them as needed (see page 11-4).
5. Turn the ignition switch OFF.
6. Disconnect the negative cable from the battery.
7. Remove the quick-connect fitting cover (A).

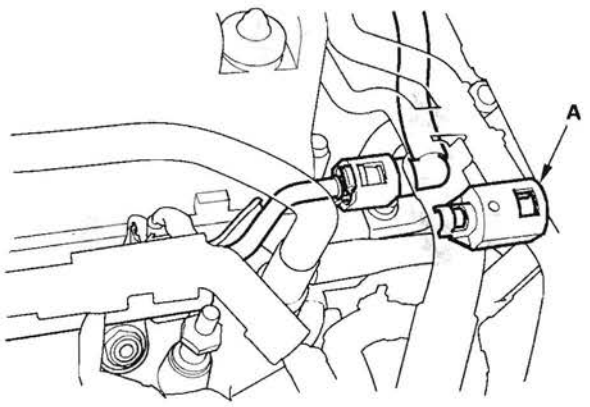

8. Check the fuel quick-connect fitting for dirt, and clean it if needed.
9. Place a rag or shop towel over the quick-connect fitting (A).

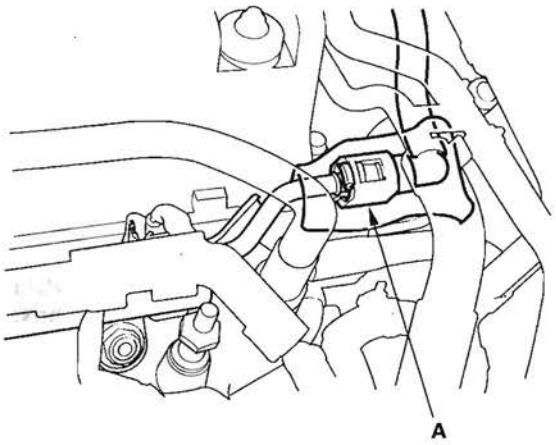

10. Disconnect the quick-connect fitting (A): Hold the connector (B) with one hand, and squeeze the retainer tabs (C) with the other hand to release them from the locking tabs (D). Pull the connector off.

    NOTE:
    - Be careful not to damage the line (E) or other parts.
    - Do not use tools.
    - If the connector does not move, keep the retainer tabs pressed down, and alternately pull and push the connector until it comes off easily.
    - Do not remove the retainer from the line; once removed, the retainer must be replaced with a new one.

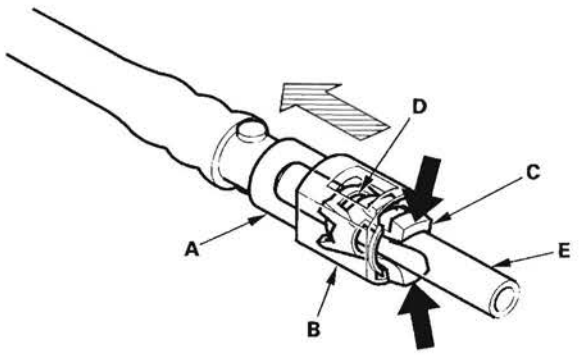

(cont'd)

Fuel Pressure Relieving (cont'd)

11. After disconnecting the quick-connect fitting, check it for dirt or damage (see step 4 on page 11-325).

12. Reconnect the negative cable to the battery, then do this:

    - Enter the anti-theft code for the audio system.
    - Set the clock.

Without the HDS

1. Make sure you have the anti-theft code for the audio system.

2. Remove the under-dash fuse/relay box (see page 22-64), then remove PGM-FI main relay 2 (FUEL PUMP) (A) from the under-dash fuse/relay box.

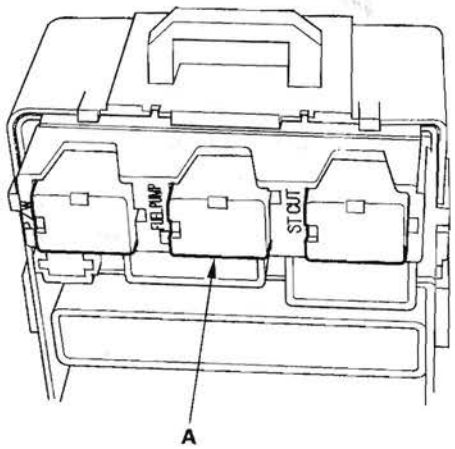

3. Reinstall the under-dash fuse/relay box.

4. Start the engine, and let it idle until it stalls.

   NOTE: If any DTCs are stored, clear and ignore them.

5. Turn the ignition switch OFF.

6. Remove the fuel fill cap.

7. Disconnect the negative cable from the battery.

8. Remove the quick-connect fitting cover (A).

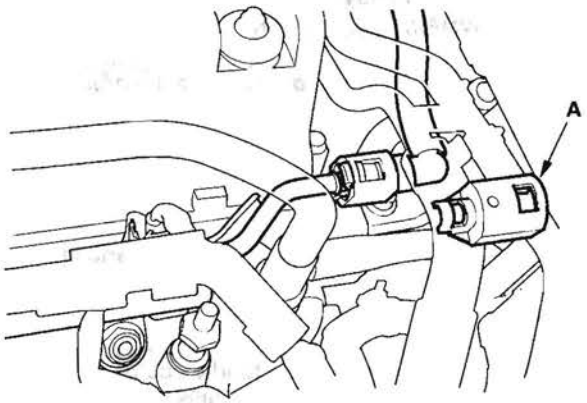

9. Check the fuel quick-connect fitting for dirt, and clean it if needed.

10. Place a rag or shop towel over the quick-connect fitting (A).

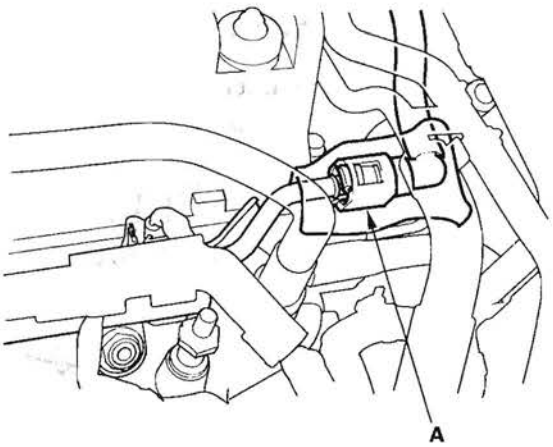

11. Disconnect the quick-connect fitting (A): Hold the connector (B) with one hand, and squeeze the retainer tabs (C) with the other hand to release them from the locking tabs (D). Pull the connector off.

    NOTE:
    - Be careful not to damage the line (E) or other parts.
    - Do not use tools.
    - If the connector does not move, keep the retainer tabs pressed down, and alternately pull and push the connector until it comes off easily.
    - Do not remove the retainer from the line; once removed, the retainer must be replaced with a new one.

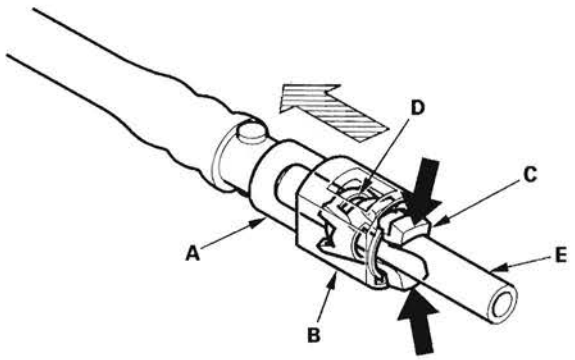

12. After disconnecting the quick-connect fitting, check it for dirt or damage (see step 4 on page 11-325).

13. Reconnect the negative cable to the battery, then do this:

    - Enter the anti-theft code for the audio system.
    - Set the clock.

Special Tools Required
- Fuel pressure gauge 07406-004000B
- Fuel pressure gauge attachment set 07AAJ-S6MA150

1. Relieve the fuel pressure (see page 11-317).

2. Disconnect the quick-connect fitting. Attach the fuel pressure gauge set and the fuel pressure gauge.

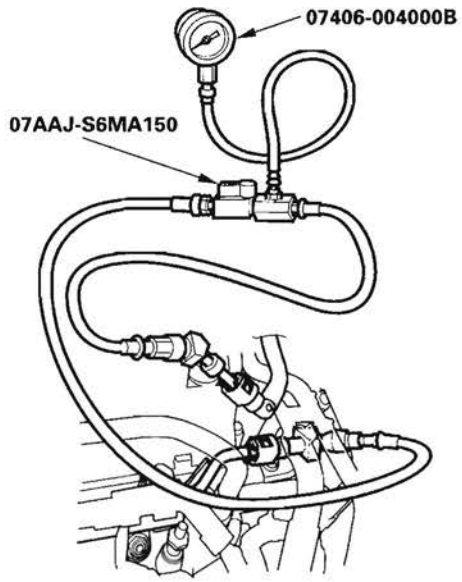

3. Start the engine, and let it idle.

    - If the engine starts, go to step 5.
    - If the engine does not start, go to step 4.

4. Check to see if the fuel pump is running: Listen to the fuel filler port with the fuel fill cap removed. The fuel pump should run for 2 seconds when the ignition switch is first turned on.

    - If the pump runs, go to step 5.
    - If the pump does not run, do the fuel pump circuit troubleshooting (see page 11-313).

5. Read the fuel pressure gauge. The pressure should be 320—370 kPa (3.3—3.8 kgf/cm^2, 47—54 psi).

    - If the pressure is OK, the test is complete.
    - If the pressure is out of specification, replace the fuel pressure regulator (see page 11-331) and the fuel filter (see page 11-331), then recheck the fuel pressure.

Fuel Tank Draining

1. Remove the fuel tank unit (see page 11-329).
2. Using a hand pump, a hose, and a container suitable for fuel, draw the fuel from the fuel tank.
3. Reinstall the fuel tank unit (see page 11-330).

Fuel Line Inspection

Check the fuel system lines and hoses for damage, leaks, and deterioration. Replace any damaged parts.

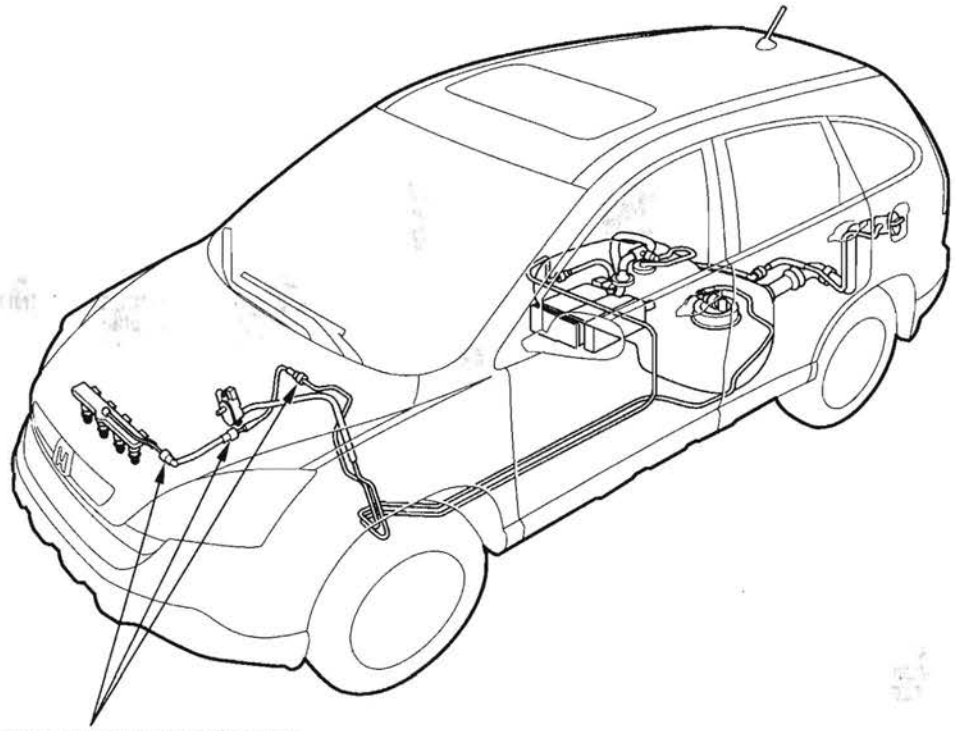

Make sure the connections are secure and the quick-connect fitting covers are firmly locked in place.

(cont'd)

Fuel Line Inspection (cont'd)

Check all clamps, and retighten if necessary.

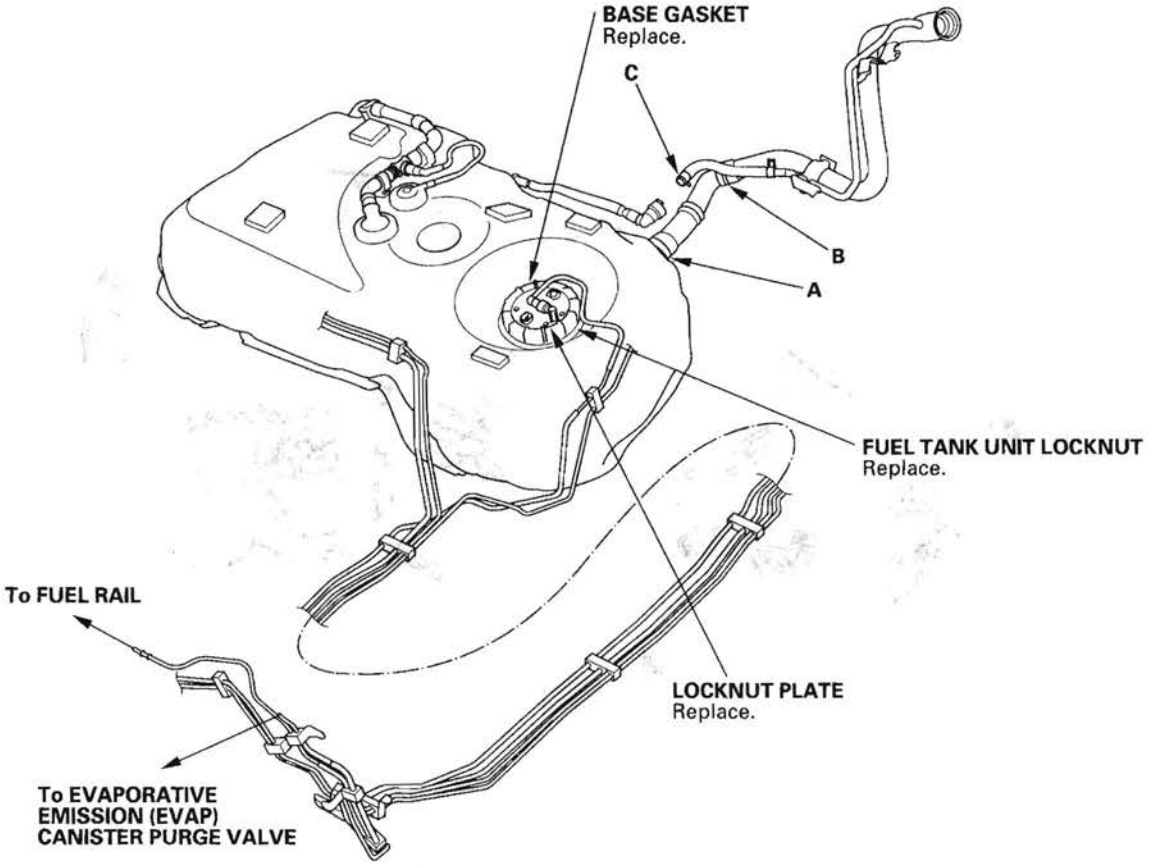

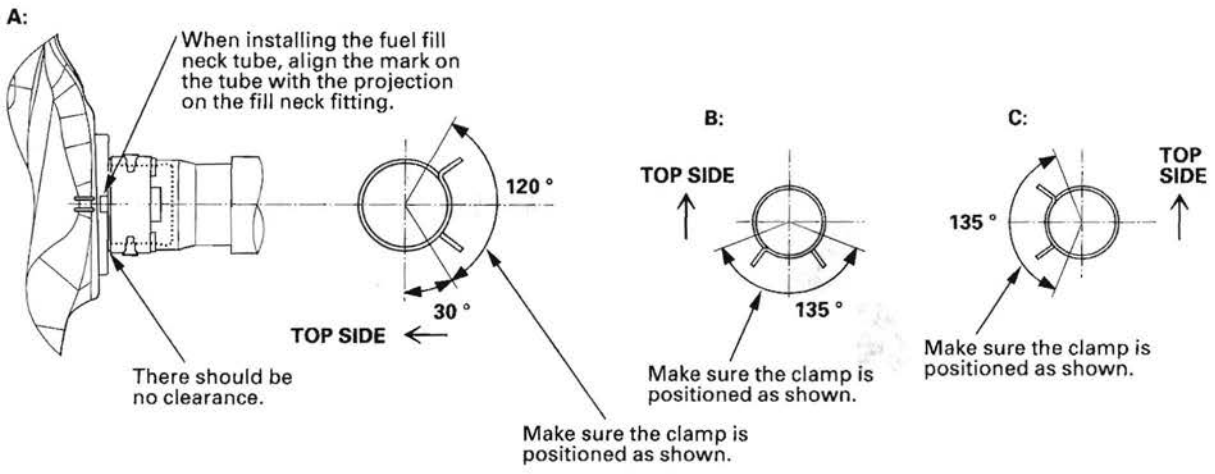

Fuel Line/Quick-Connect Fitting Precautions

The fuel line/quick-connect fittings (C), (D), (E), (F), (G), and (H) connect the fuel rail (I) to fuel feed hose A, fuel feed hose A to fuel feed hose B, fuel feed hose B to the fuel line (J), the fuel line (K) to the fuel tank unit (L), the fuel vapor line (M) to the EVAP canister (N), the fuel tank vapor control valve hose (O) to the fuel tank vapor/liquid separator valve hose (P), and the fuel tank vapor recirculation tube (Q) to the joint (R). When removing or installing the fuel feed hose, the fuel tank unit, or the fuel tank, it is necessary to disconnect or connect the quick-connect fittings.
Pay attention to the following:

- The fuel feed hoses, fuel line, and quick-connect fittings are not heat-resistant; be careful not to damage them during welding or other heat-generating procedures.
- The fuel feed hoses, fuel line, and quick-connect fittings are not acid-proof; do not touch them with a shop towel that was used for wiping battery electrolyte. Replace them if they come in contact with electrolyte or something similar.
- When connecting or disconnecting the fuel feed hoses, fuel line, and quick-connect fittings, be careful not to bend or twist them excessively. Replace them if they are damaged.

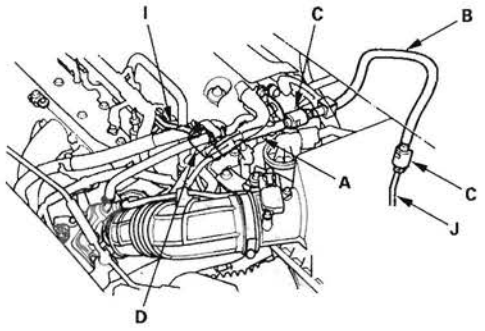

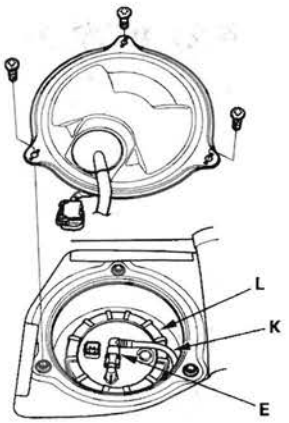

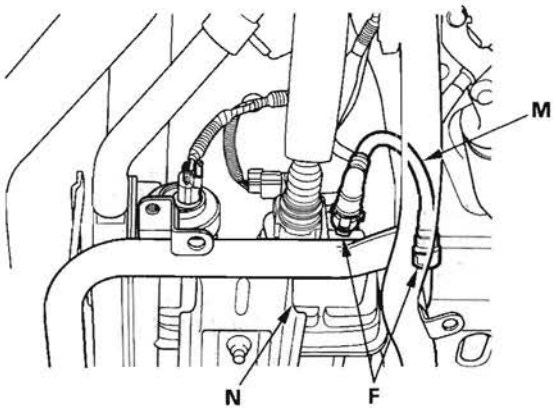

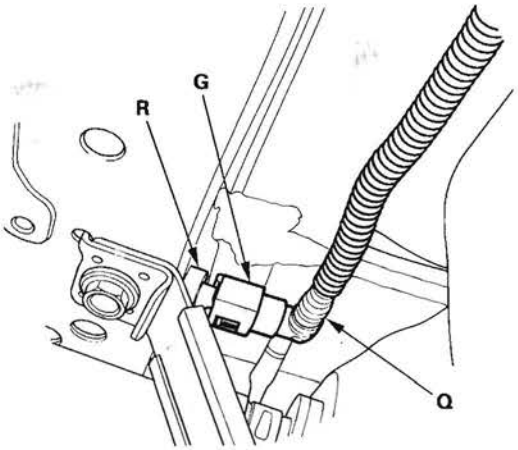

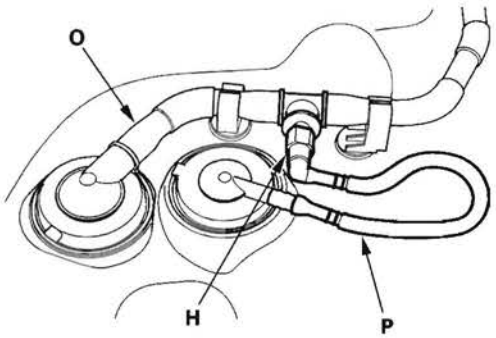

(cont'd)

Fuel Line/Quick-Connect Fitting Precautions (cont'd)

A disconnected quick-connect fitting can be reconnected, but the retainer on the mating line cannot be reused once it has been removed from the line. Replace the retainer when:

- replacing the fuel rail.
- replacing the fuel line.
- replacing the fuel pump.
- replacing the fuel filter.
- replacing the fuel gauge sending unit.
- replacing the EVAP purge line.
- replacing the EVAP canister.
- replacing the fuel tank.
- it has been removed from the line.
- it is damaged.

Location	Manufacturer	Retainer color	Line diameter
C	Tokai	Green	0.2 in. (6.3 mm)
D	Tokai	Blue green	0.3 in. (8 mm)
E	Sanoh	White	0.4 in. (9.5 mm)
F	Sanoh	White	0.4 in. (9.5 mm)
G	Tokai DTR	Orange	0.4 in. (9.5 mm)
H	Toyoda gosei	White	0.3 in. (8 mm)

Fuel Line/Quick-Connect Fitting Removal

NOTE: Before you work on the fuel lines and fittings, read the "Fuel Line/Quick-Connect Fitting Precautions" (see page 11-323).

1. Relieve the fuel pressure (see page 11-317).
2. Check the fuel quick-connect fittings (A) for dirt, and clean them if needed.

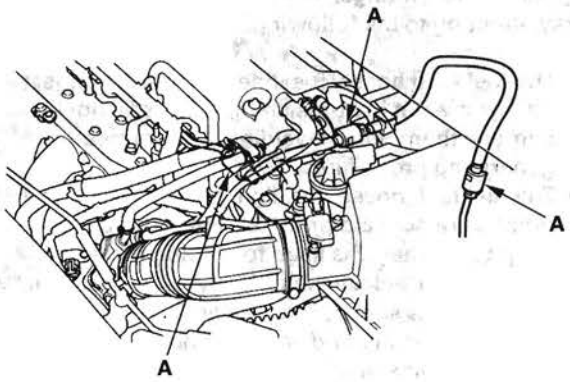

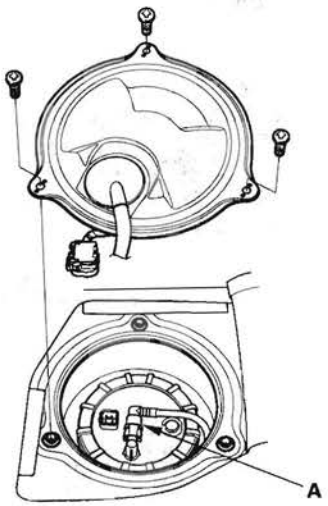

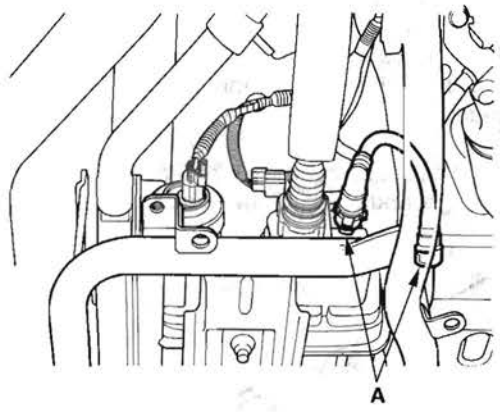

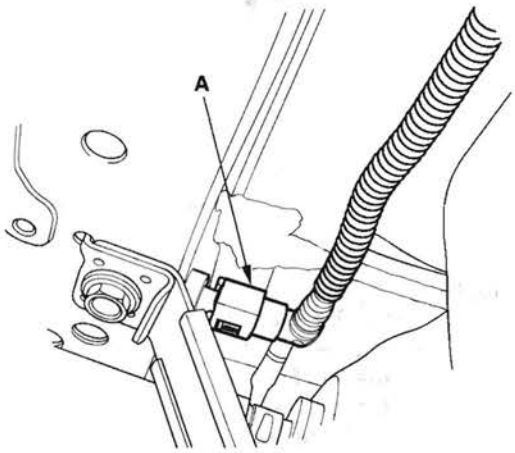

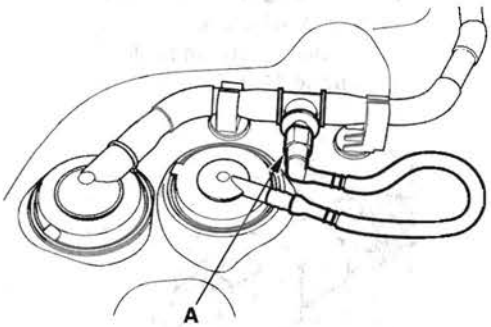

3. Place a rag or shop towel over the quick-connect fitting. Hold the connector (A) with one hand, and squeeze the retainer tabs (B) with the other hand to release them from the locking tabs (C). Pull the connector off.

   NOTE:
   - Be careful not to damage the line (D) or other parts. Do not use tools.
   - If the connector does not move, keep the retainer tabs pressed down, and alternately pull and push the connector until it comes off easily.
   - Do not remove the retainer from the line; once removed, the retainer must be replaced with a new one.

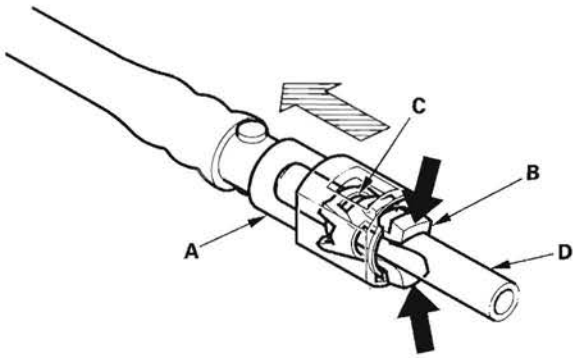

4. Check the contact area (A) of the line (B) for dirt or damage.

   - If dirty, clean the connector, and dry it with the compressed air.
   - If it is rusty or damaged, replace the fuel filter, or fuel feed line.

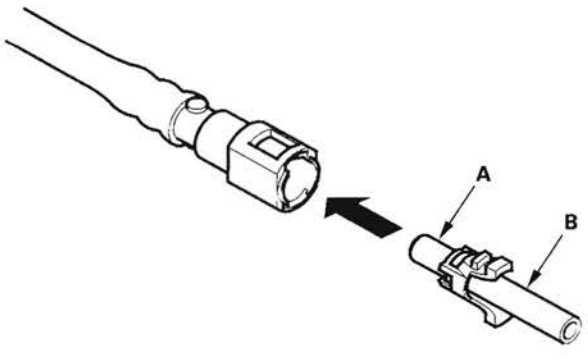

(cont'd)

Fuel Line/Quick-Connect Fitting Removal (cont'd)

5. To prevent damage and keep foreign matter out, cover the disconnected connector and line ends with plastic bags (A).

   NOTE: The retainer cannot be reused once it has been removed from the line.
   Replace the retainer when:
   - replacing the fuel rail.
   - replacing the fuel feed line.
   - replacing the fuel pump.
   - replacing the fuel filter.
   - replacing the fuel gauge sending unit.
   - replacing the EVAP purge pipe.
   - replacing the EVAP canister.
   - replacing the fuel tank.
   - it has been removed from the line.
   - it is damaged.

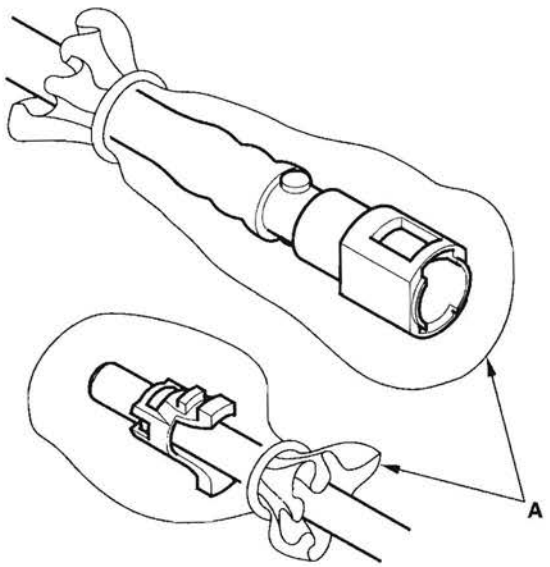

Fuel Line/Quick-Connect Fitting Installation

NOTE: Before you work on the fuel lines and fittings, read the "Fuel Line/Quick-Connect Fitting Precautions" (see page 11-323).

1. Check the contact area (A) of the line (B) for dirt or damage, and clean it if needed.

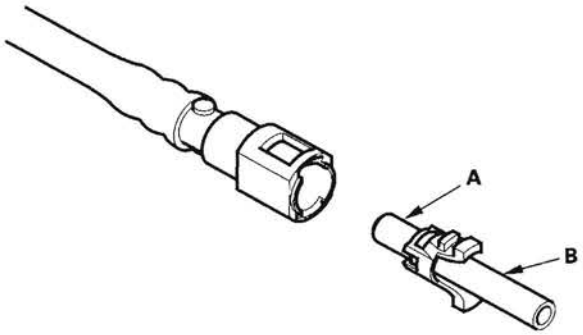

2. Insert a new retainer (A) into the connector (B) if the retainer is damaged, or after:

   - replacing the fuel rail.
   - replacing the fuel feed line.
   - replacing the fuel pump.
   - replacing the fuel filter.
   - replacing the fuel gauge sending unit.
   - replacing the EVAP purge pipe.
   - replacing the EVAP canister.
   - replacing the fuel tank.
   - removing the retainer from the line.
   - Use the same manufacturer retainer and the same size retainer when the replacing the retainer (see page 11-323).

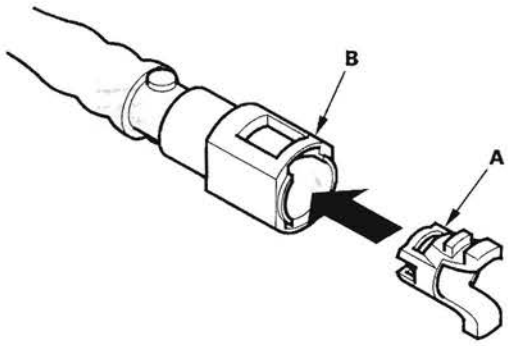

3. Before connecting a new fuel tube/quick-connect fitting assembly (A), remove the old retainer (B) from the mating line.

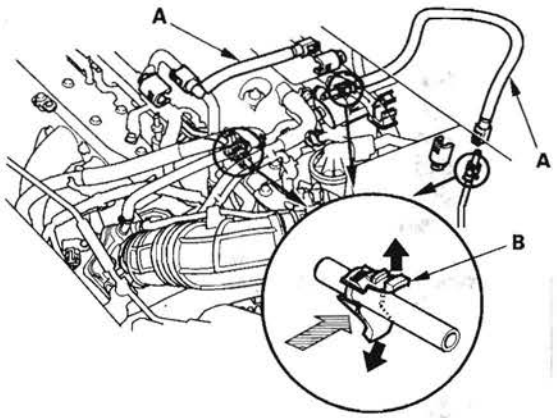

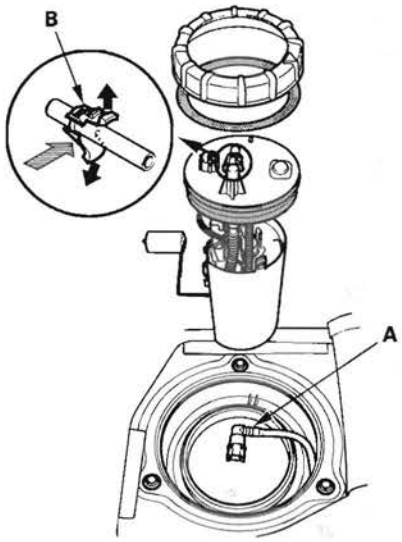

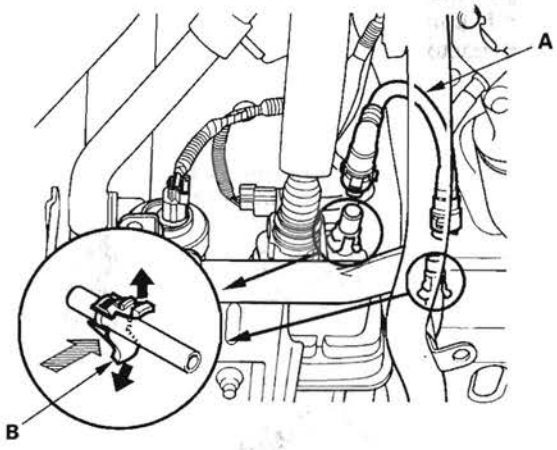

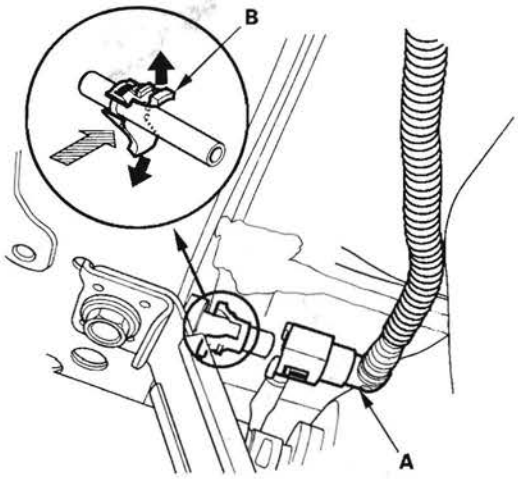

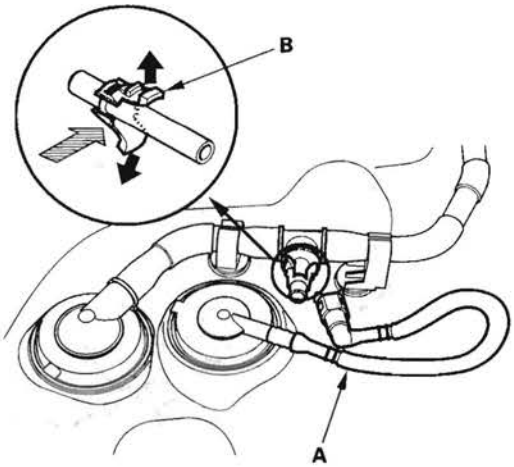

(cont'd)

Fuel Line/Quick-Connect Fitting Installation (cont'd)

4. Align the quick-connect fittings with the line (A), and align the retainer locking tabs (B) with the connector grooves (C). Then press the quick-connect fittings onto the line until both retainer tabs lock with a clicking sound.

   NOTE: If it is hard to connect, put a small amount of new engine oil on the line end.

Connection with new retainer

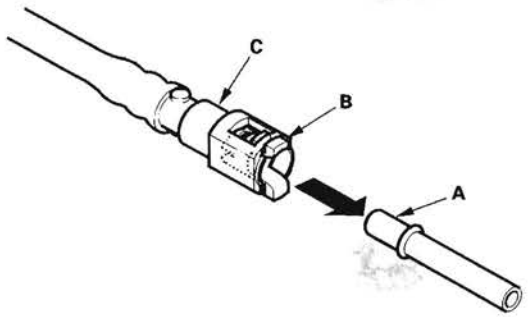

Connection to new fuel line

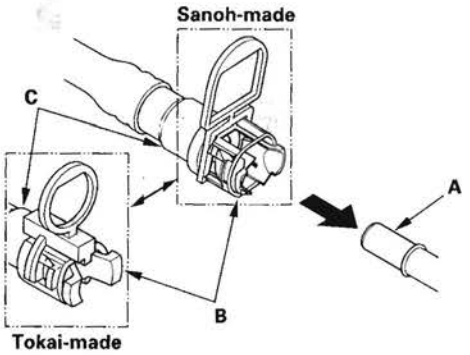

Reconnection to existing retainer

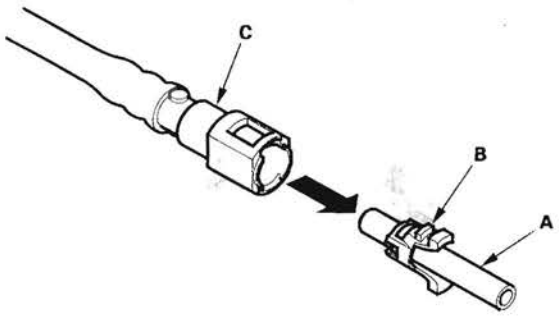

5. When you are reconnecting the connector with the old retainer, make sure the connection is secure and the tabs (A) are firmly locked into place; check visually and also by pulling the connector (B). When you are replacing the fuel line with a new one, make sure you remove the ring pull (C) upwards after you confirm the connection is secure.

   NOTE: Before you remove the ring pull, make sure the fuel line connection is secure. If the connection is not secure, the ring pull could break when you try to remove it.

Reconnection to existing retainer

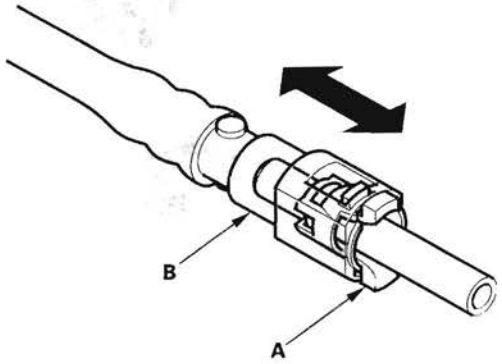

Connection to new fuel line

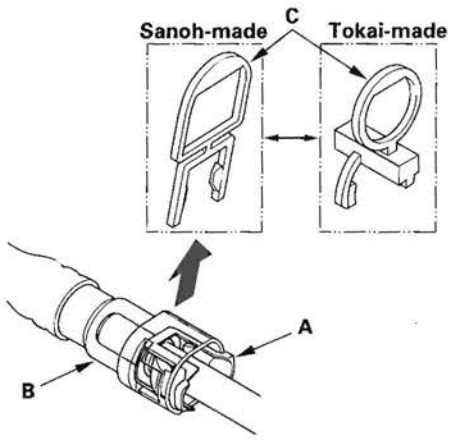

6. Reconnect the negative cable to the battery, and turn the ignition switch ON (II) (but do not operate the starter motor). The fuel pump will run for about 2 seconds, and fuel pressure will rise. Repeat two or three times, and check that there is no leakage in the fuel supply system.

Fuel Tank Unit Removal/Installation

Special Tools Required
Fuel sender wrench 07AAA-S0XA100

Removal

1. Relieve the fuel pressure (see page 11-317).
2. Remove the fuel fill cap.
3. Fold the left side rear seat forward, and pull back the carpet to expose the access panel.
4. Remove the access panel (A) from the floor.

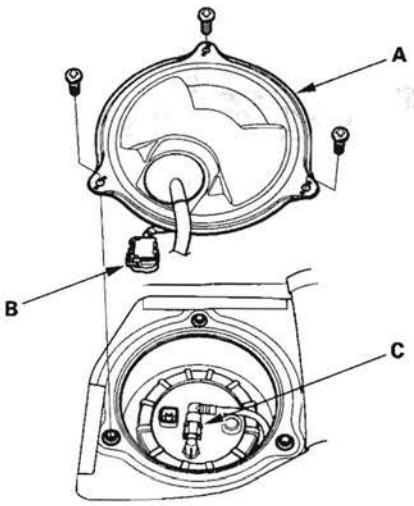

5. Disconnect the fuel tank unit 4P connector (B).
6. Disconnect the quick-connect fitting (C) from the fuel tank unit.
7. Using the special tool, loosen the locknut (A).

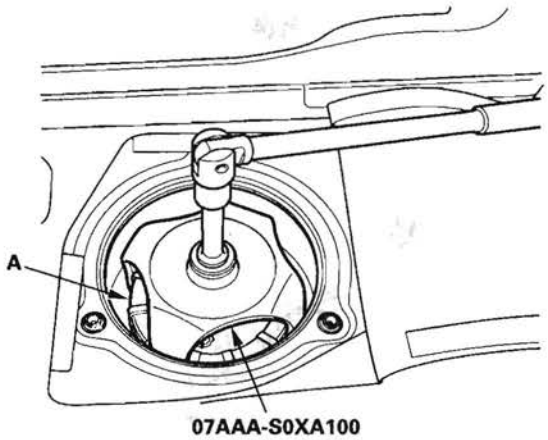

8. Remove the locknut (A) and the fuel tank unit (B).

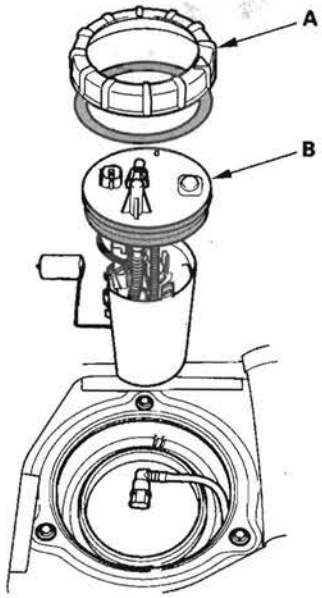

(cont'd)

Fuel Tank Unit Removal/Installation (cont'd)

Installation

1. Install a new base gasket (A) and the locknut plate (B) to the fuel tank (C).

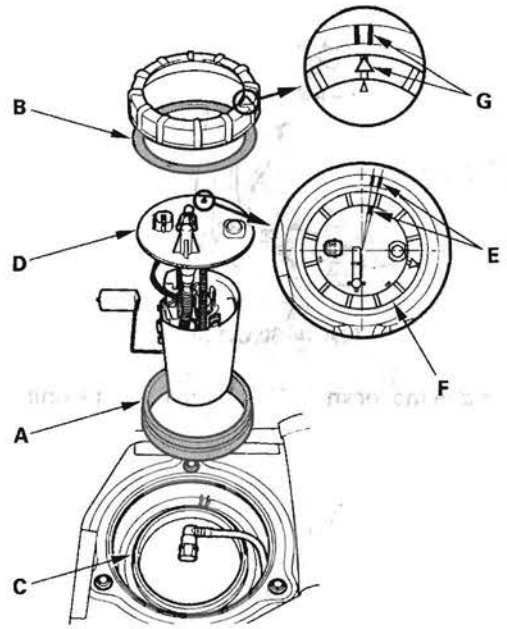

2. Insert the fuel tank unit (D) into the fuel tank. Be careful not to bend the fuel gauge sending unit.

3. Align the marks (E) on the fuel tank and the fuel tank unit, then tighten a new locknut (F) by hand.

   NOTE:
   - Before tightening, align the marks (G) on the fuel tank and the locknut.
   - After tightening, make sure the marks are still aligned. Check circumference of the base gasket visually or by hand and be sure that the gasket is not pinched.
   - Do not coat the base gasket and the locknut plate with engine oil.

4. Using the tool, tighten the fuel tank unit locknut (A).

   NOTE: After installation, check the base gasket visually or by hand to be sure the gasket is not pinched.

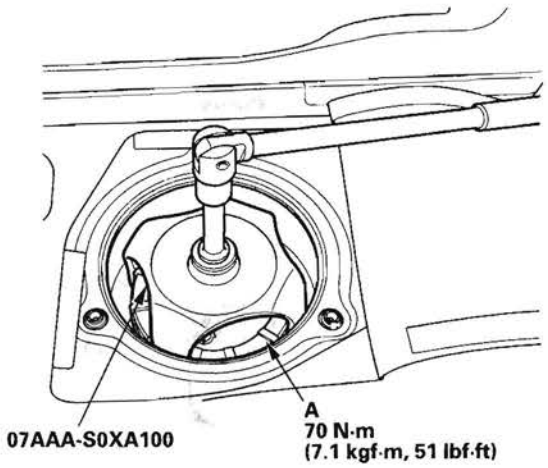

Fuel Pressure Regulator Replacement

1. Remove the fuel tank unit (see page 11-329).
2. Remove the reservoir (A).

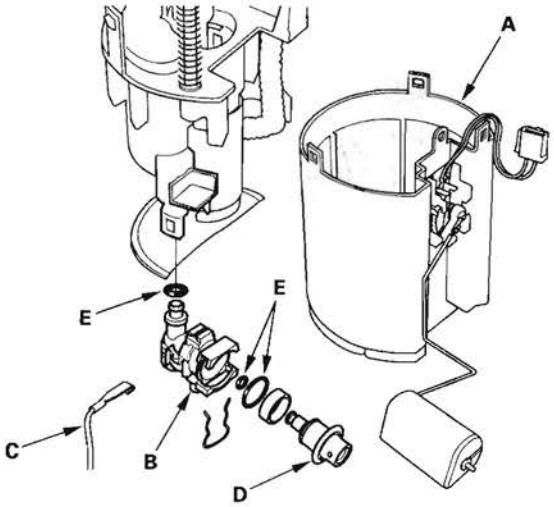

3. Remove the bracket (B).
4. Remove the ground (C).
5. Remove the fuel pressure regulator (D).
6. Install the parts in the reverse order of removal with new O-rings (E) and a new bracket. When installing the fuel tank unit, align the marks on the unit and the fuel tank (see page 11-330).

   NOTE: Coat the O-rings with clean engine oil; do not use any other oils or fluids.
   Do not pinch the O-rings during installation.

Fuel Filter Replacement

The fuel filter should be replaced whenever the fuel pressure drops below the specified value (see page 11-319), after making sure that the fuel pump and the fuel pressure regulator are OK.

1. Remove the fuel tank unit (see page 11-329).
2. Remove the fuel filter set (A).

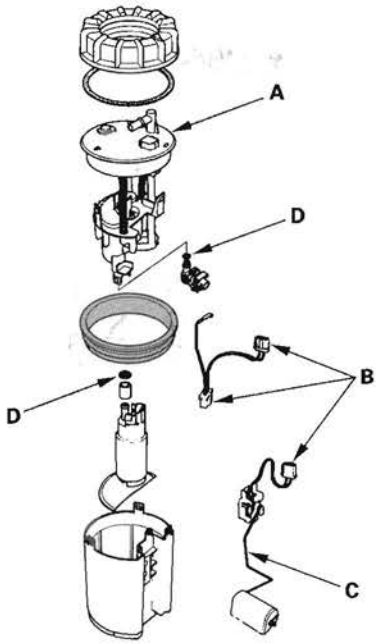

3. Check these items before installing the fuel tank unit:

   - When connecting the wire harness, make sure the connection is secure and the connectors (B) are firmly locked into place.
   - When installing the fuel gauge sending unit (C), make sure the connection is secure and the connector is firmly locked into place. Be careful not to bend or twist it excessively.

4. Install the parts in the reverse order of removal with new O-rings (D). When installing the fuel tank unit, align the marks on the unit and the fuel tank (see page 11-330).

   NOTE: Coat the O-rings with clean engine oil.

Fuel Pump/Fuel Gauge Sending Unit Replacement

1. Remove the fuel tank unit (see page 11-329).

2. Remove the fuel level sensor (fuel sending unit) (A) from the fuel tank unit (B).

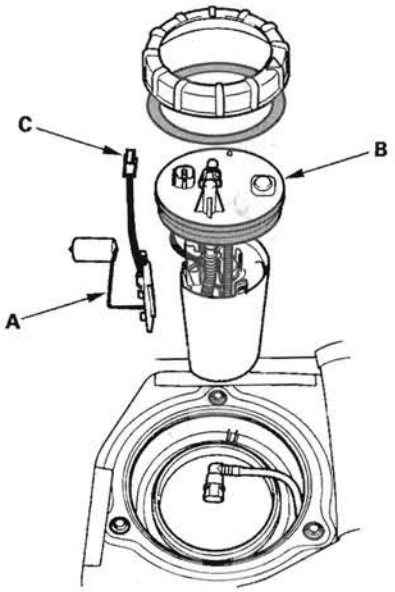

3. Check these items before installing the fuel tank unit:

   - When connecting the wire harness, make sure the connection is secure and the connector (C) are firmly locked into place.
   - When installing the fuel gauge sending unit, make sure the connection is secure and the connector is firmly locked into place. Be careful not to bend or twist it excessively.

4. Install the parts in the reverse order of removal. When installing the fuel tank unit, align the marks on the unit and the fuel tank (see page 11-330).

Fuel Tank Replacement

1. Drain the fuel tank (see page 11-320), then disconnect the fuel tank unit 4P connector (A) and the quick-connect fittings (B).

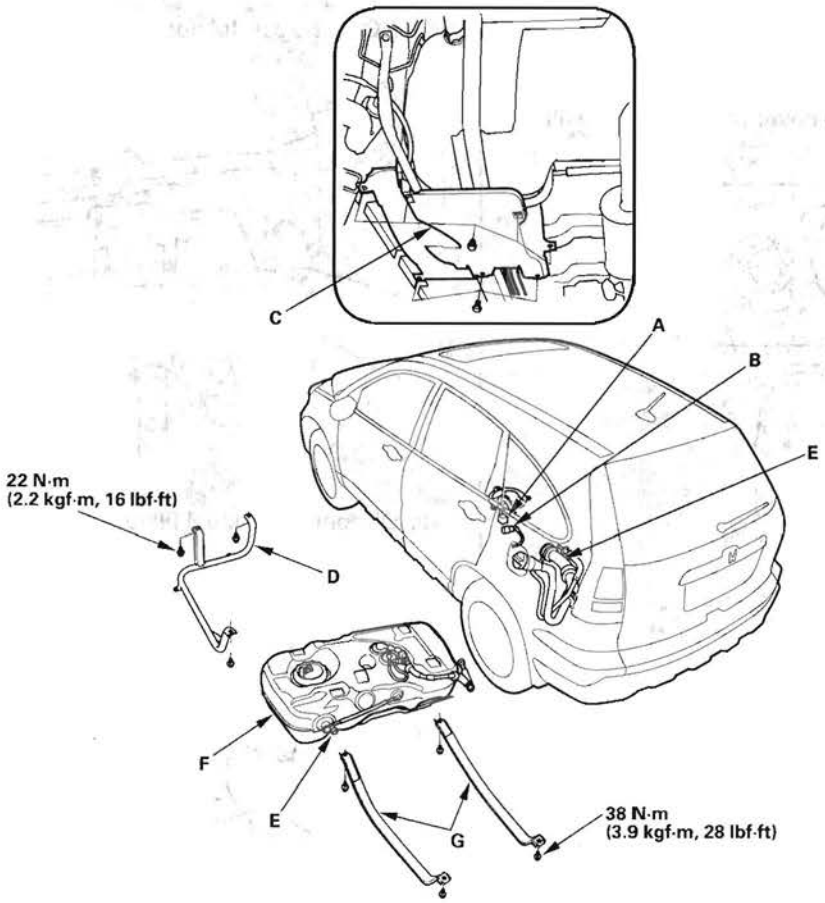

2. Lift the vehicle, and support it with jackstands.
3. Remove the EVAP canister (see page 11-395).
4. Remove the cover (C) and the fuel tank guard (D).
5. 4WD model: Remove the propeller shaft (see page 16-40).
6. Remove the exhaust pipe (see page 9-9).
7. Disconnect the hoses (E). Slide back the clamps, then twist the hoses as you pull to avoid damaging them.
8. Place a jack or other support under the tank (F).
9. Remove the strap bolts and the straps (G).
10. Remove the fuel tank.
11. Install the parts in the reverse order of removal.

Fuel Fill Pipe Removal/Installation

1. Relieve the fuel pressure (see page 11-317).
2. Drain the fuel tank (see page 11-320).
3. Remove the fuel fill cap.
4. Remove the fuel fill pipe cover (A) and the fuel fill cap adapter (B).

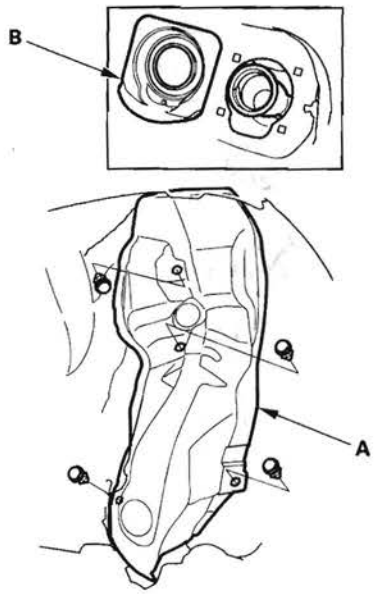

5. Remove the rear wheel and wheel sensors (see page 19-100).
6. Support the rear differential (4WD model), and the rear axle beam with a transmission jack.
7. Remove the flange bolts from the bottom of the rear damper/springs (see page 18-39).
8. Remove the rear differential (4WD model) (see page 15-34) and the rear suspension subframe mounting bolts (see page 20-199).
9. Lower the transmission jack (A) and the rear differential or axle beam.

   NOTE: Be careful not to damage the connecting parts.

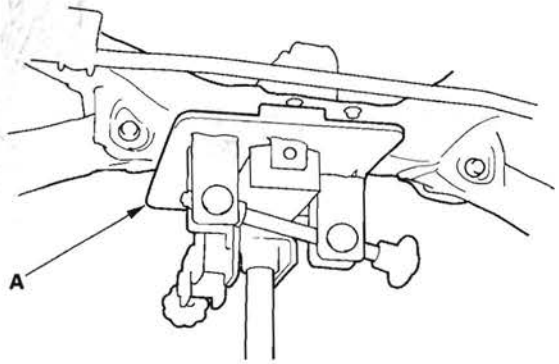

10. Disconnect the fuel fill tube (A) and the fuel vapor hose (B).

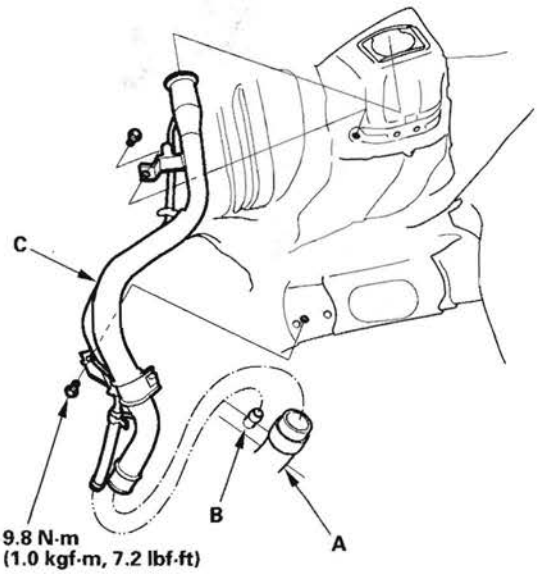

11. Remove the fuel fill pipe (C).
12. Install the parts in the reverse order of removal.

Fuel Gauge Sending Unit Test

NOTE: For the fuel gauge system circuit diagram, refer to the Gauges Circuit Diagram (see page 22-232).

1. Check the No. 10 METER (7.5 A) fuse in the under-dash fuse/relay box before testing.

2. Check for body electrical system DTCs.

   - If no problem is found, go to step 3.
   - If DTC B1175 or B1176 is indicated, go to the indicated DTC's troubleshooting.

3. Turn the ignition switch OFF.

4. Fold the left side rear seat forward, and pull back the carpet to expose the access panel.

5. Remove the access panel (A) from the floor.

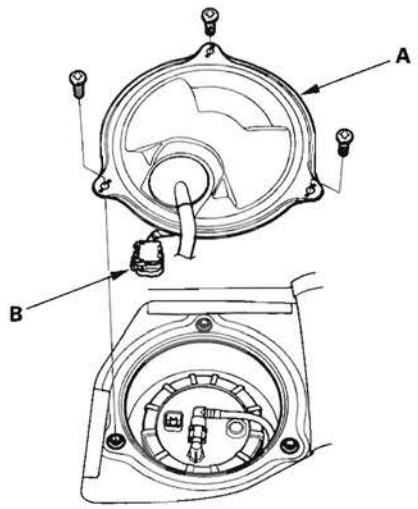

6. Disconnect the fuel tank unit 4P connector (B).

7. Measure voltage between fuel tank unit 4P connector terminals No. 1 and No. 3 with the ignition switch ON (II). There should be battery voltage.

   - If the voltage is OK, go to step 8.
   - If the voltage is not as specified, check for:
     – a short in the LT BLU wire to ground.
     – an open in the LT BLU or ORN wire.

FUEL TANK UNIT 4P CONNECTOR

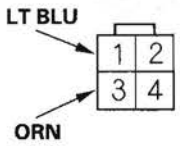

Wire side of female terminals

8. Turn the ignition switch OFF.

9. Remove the fuel tank unit from the fuel tank (see page 11-329).

(cont'd)

Fuel Gauge Sending Unit Test (cont'd)

10. Measure resistance between fuel tank unit 4P connector terminals No. 1 and No. 3 with the float at E (EMPTY), LOW (LOW FUEL INDICATOR), 1/2 (HALF FULL), and F (FULL) positions.
If you do not get the following readings, replace the fuel gauge sending unit (see page 11-332).

Float Position	F 8.7 in. (221.5 mm)	1/2 6.3 in. (160.1 mm)	LOW 2.7 in. (68.4 mm)	E 1.7 in. (42.7 mm)
Resistance (Ω)	19 to 21	202.6 to 212.6	566.6 to 660.2	772 to 788

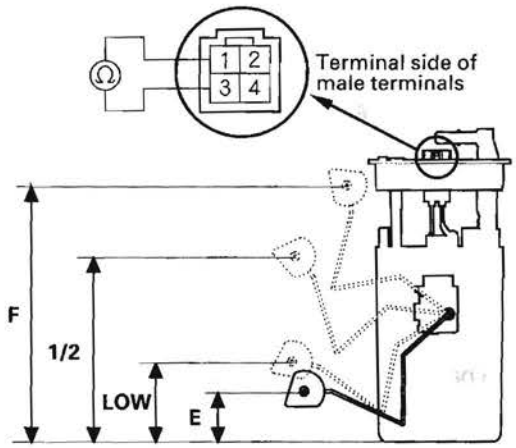

11. Reconnect the fuel tank unit 4P connector.

12. Remove the No. 23 BACK UP (10 A) fuse from the under-hood fuse/relay box for at least 10 seconds, then reinstall it.

13. Turn the ignition switch ON (II).

14. Check that the pointer of the fuel gauge indicates "F" with the float at F.

    - If the pointer of the fuel gauge does not indicate "F", replace the gauge assembly.
    - If the gauge is OK, the test is complete.

    NOTE:
    - The pointer of the fuel gauge returns to the bottom of the gauge dial when the ignition switch is OFF, regardless of the fuel level.
    - Remove the No. 23 BACK UP (10 A) fuse from the under-hood fuse/relay box for at least 10 seconds after completing troubleshooting, otherwise it may take up to 20 minutes for the fuel gauge to indicate the correct fuel level.

Low Fuel Indicator Test

1. Do the gauge self-diagnostic test (see page 22-229).

    - If the low fuel indicator flashes, go to step 2.
    - If the low fuel indicator does not flash, replace the gauge control module (see page 22-248).

2. Check for body electrical system DTCs.

    - If any DTCs are indicated, do the indicated DTC's troubleshooting.
    - If no DTCs are indicated, go to step 3.

3. Do the fuel gauge sending unit test (see page 11-335).

Component Location Index

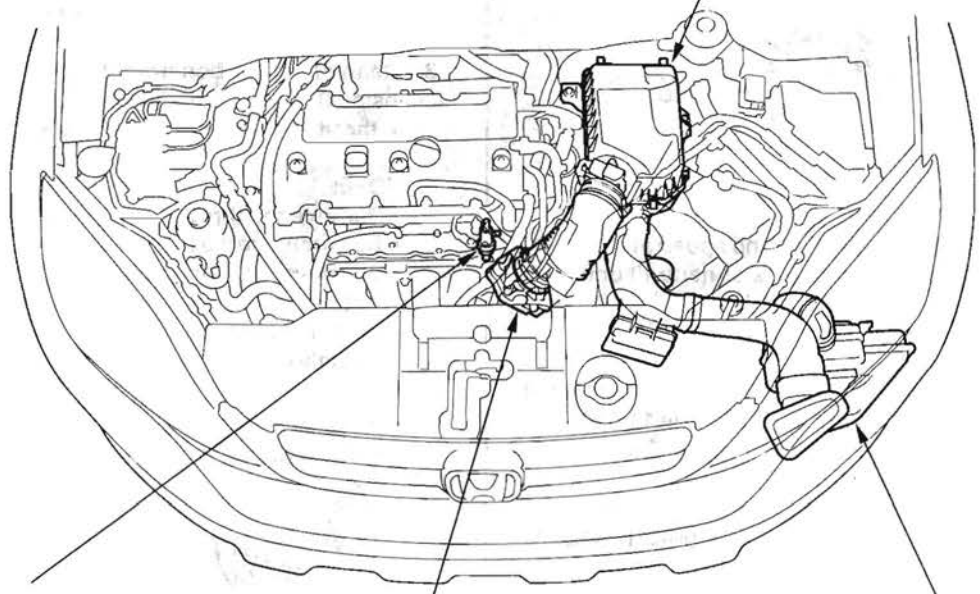

AIR CLEANER
Removal/Installation, page 11-340
Element Inspection/Replacement, page 11-340

INTAKE AIR BYPASS CONTROL THERMAL VALVE
Test, page 11-339
Replacement, page 11-344

THROTTLE BODY
Test, page 11-338
Cleaning, page 11-338
Removal/Installation, page 11-342
Disassembly/Reassembly, page 11-343

RESONATOR
Removal/Installation, page 11-341

Throttle Body Test

Carbon Accumulation Check

NOTE: If the malfunction indicator lamp (MIL) has been reported on, check for diagnostic trouble codes (DTCs).

1. Connect the HDS to the data link connector (DLC) (A) located under the driver's side of the dashboard.

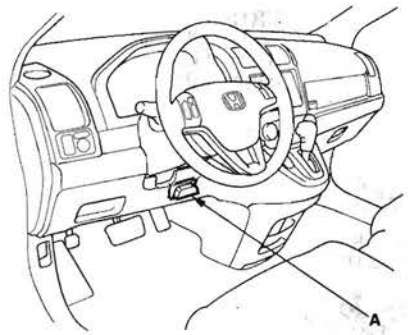

2. Start the engine. Hold the engine speed at 3,000 rpm without load (in Park or neutral) until the radiator fan comes on, then let it idle.
3. Check the REL TP SENSOR in the DATA LIST with the HDS. The reading should be below 2.46 deg. If it is not, clean the throttle body (see page 11-338).

Throttle Position Learning Check

NOTE: If the malfunction indicator lamp (MIL) has been reported on, check for diagnostic trouble codes (DTCs).

1. Connect the HDS to the data link connector (DLC) (A) located under the driver's side of the dashboard.

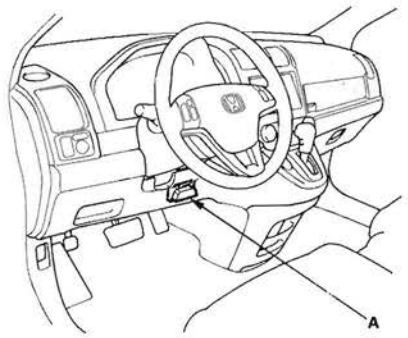

2. Select the INSPECTION MENU with the HDS.
3. Do the TP POSITION CHECK in the ETCS TEST. If needed, clean the throttle body (see page 11-338).

Throttle Body Cleaning

⚠CAUTION

Do not insert your fingers into the installed throttle body when you turn the ignition switch ON (II) or while the ignition switch is ON (II). If you do, you will seriously injure your fingers if the throttle valve is activated.

1. Check for damage to the air cleaner. If the air cleaner is damaged, replace it (see page 11-340).
2. Remove the throttle body (see page 11-342).
3. Clean off the carbon from the throttle valve and inside the throttle body with a paper towel soaked in throttle plate and induction cleaner.

   NOTE:
   - Remove the throttle body to clean it.
   - Be careful not to pinch your fingers.
   - To avoid removing the molybdenum coating, do not clean the bearing area of the throttle shaft (A).
   - Do not spray throttle plate and induction cleaner directly on the throttle body.
   - Use Honda genuine throttle plate and induction cleaner.

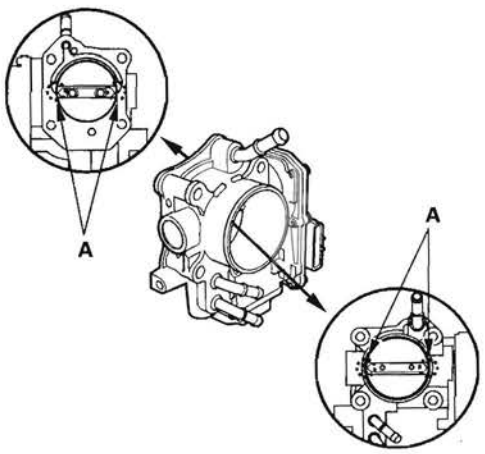

4. Install the throttle body (see page 11-342).
5. Reset the PCM with the HDS (see page 11-4).
6. Turn the ignition switch ON (II), and wait for 2 seconds.
7. Do the PCM idle learn procedure (see page 11-304).

Intake Air Bypass Control Thermal Valve Test

Special Tools Required
Vacuum pump/gauge, 0—30 in.Hg, Snap-on YA4000A or equivalent, commercially available

1. Remove the intake manifold cover (see step 5 on page 9-3). Remove the vacuum hose (A) from the air intake duct, and connect a vacuum pump/gauge, 0—30 in.Hg, to the hose.

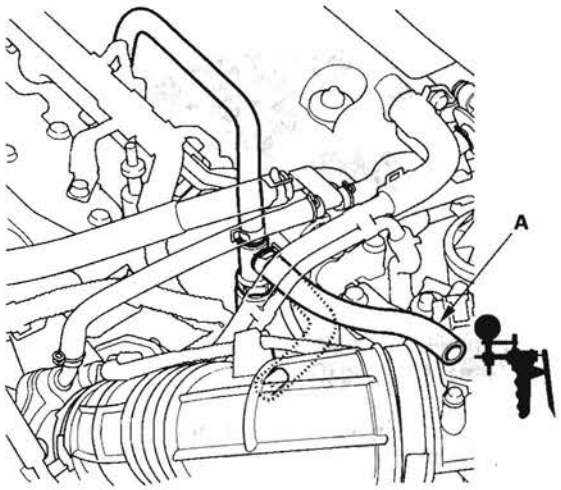

2. Start the engine, and let it idle.

   NOTE: Engine coolant temperature must be below 149 °F (65 °C).

3. Raise and lower the engine speed, and make sure the vacuum gauge reading changes as the engine speed changes.

   If the vacuum reading does not change, check for these problems:

   - Misrouted, leaking, broken, or clogged intake air bypass control system vacuum lines.
   - A cracked or damaged intake air bypass control thermal valve. Replace the intake air bypass control thermal valve (see page 11-344).

4. Hold the engine speed at 3,000 rpm without load (in Park or neutral) until the radiator fan comes on, then let it idle.

5. Raise and lower the engine speed, and make sure the vacuum gauge reading does not change as the rpm changes.

   If the vacuum reading changes, check for these problems:

   - Misrouted, leaking, broken, or clogged intake air bypass control system vacuum lines.
   - A cracked or damaged intake air bypass control thermal valve. Replace the intake air bypass control thermal valve (see page 11-344).

Air Cleaner Removal/Installation

1. Make sure you have the anti-theft code for the audio system.
2. Remove the battery.
3. Remove the bolts (A).

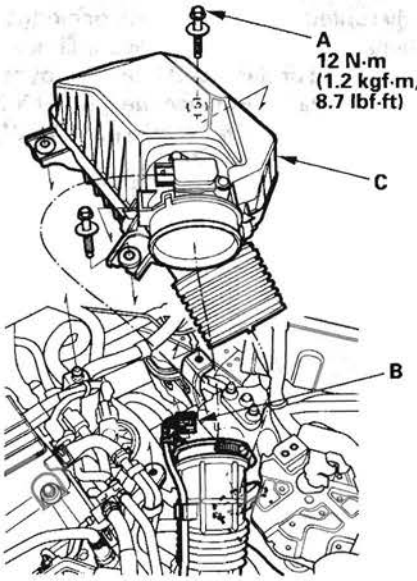

4. Disconnect the MAF sensor/IAT sensor connector (B).
5. Remove the air cleaner (C).
6. Install the parts in the reverse order of removal.
7. Reinstall the battery, and do these items:
   - Enter the anti-theft code for the audio system.
   - Reset the clock.

Air Cleaner Element Inspection/ Replacement

1. Open the air cleaner housing cover (A).

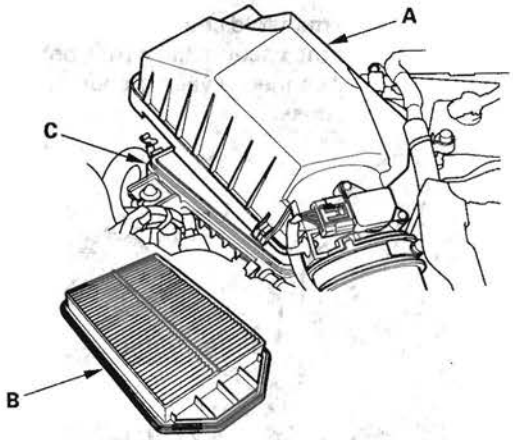

2. Remove the air cleaner element (B) from the air cleaner housing (C).
3. Check the air cleaner element for damage or clogging. If there is damage or clogging, replace the air cleaner element.

   NOTE: Do not use compressed air to clean the air cleaner element.

4. Install the parts in the reverse order of removal.
5. If the maintenance minder requires air cleaner replacement, reset the maintenance minder (see page 3-8), and this procedure is complete. If the maintenance minder did not require air cleaner replacement, go to step 6.
6. Select BODY ELECTRICAL with the HDS.
7. Select ADJUSTMENT in the GAUGES MENU with the HDS.
8. Select RESET in the MAINTENANCE MINDER with the HDS.
9. Select MAINTENANCE SUB ITEM 2 RESET with the HDS.
10. Reset the PCM with the HDS.
11. Do the PCM idle learn procedure (see page 11-304).

Resonator Removal/Installation

1. Make sure you have the anti-theft code for the audio system.
2. Remove the battery.
3. Remove the battery base (A).

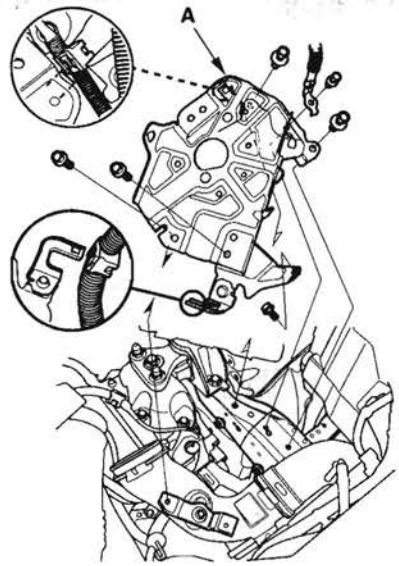

4. Remove the air intake duct. (A).

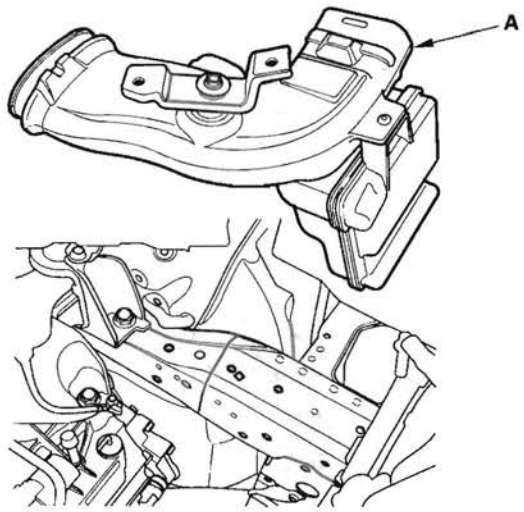

5. Remove the front bumper (see page 20-149).
6. Remove the resonator (A) and duct (B).

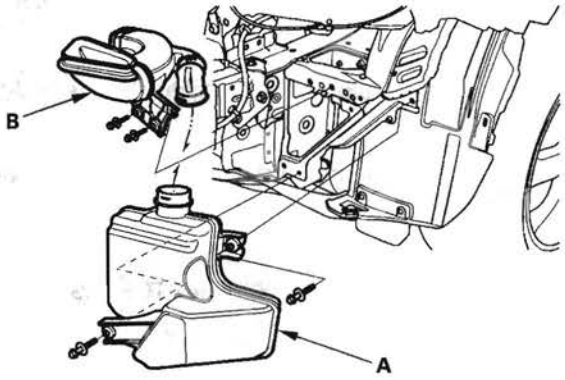

7. Install the parts in the reverse order of removal.
8. Reinstall the battery, and do these items:
   - Enter the anti-theft code for the audio system.
   - Reset the clock.

Throttle Body Removal/Installation

⚠CAUTION

Do not insert your fingers into the installed throttle body when you turn the ignition switch ON (II) or while the ignition switch is ON (II). If you do, you will seriously injure your fingers if the throttle valve is activated.

NOTE: If you are replacing or cleaning the throttle body, start at step 1. If you are removing the throttle body, start at step 4.

1. Connect the HDS to the DLC while the engine is stopped.
2. Select the INSPECTION MENU on the HDS.
3. Do the TP POSITION CHECK in the ETCS TEST.
4. Remove the air intake duct (A).

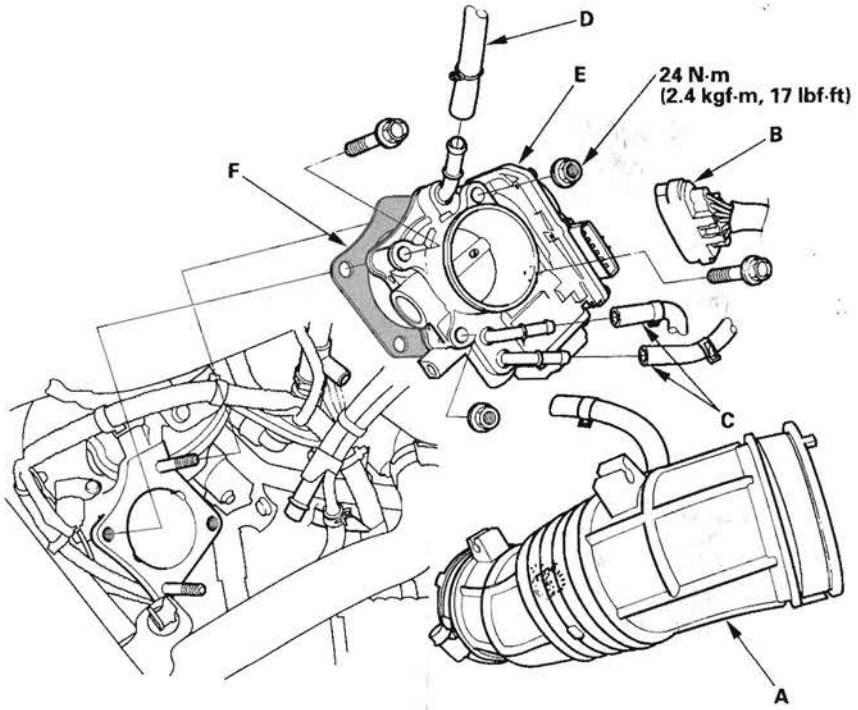

5. Disconnect the throttle body connector (B).
6. Disconnect the water bypass hoses (C), and plug the water bypass hoses.
7. Disconnect the vacuum hose (D).
8. Remove the throttle body (E).
9. Install the parts in the reverse order of removal with a new gasket (F), then check these items:
   - Do the PCM idle learn procedure after replacing the throttle body (see page 11-304).
   - Refill the radiator with engine coolant (see page 10-6).

Throttle Body Disassembly/Reassembly

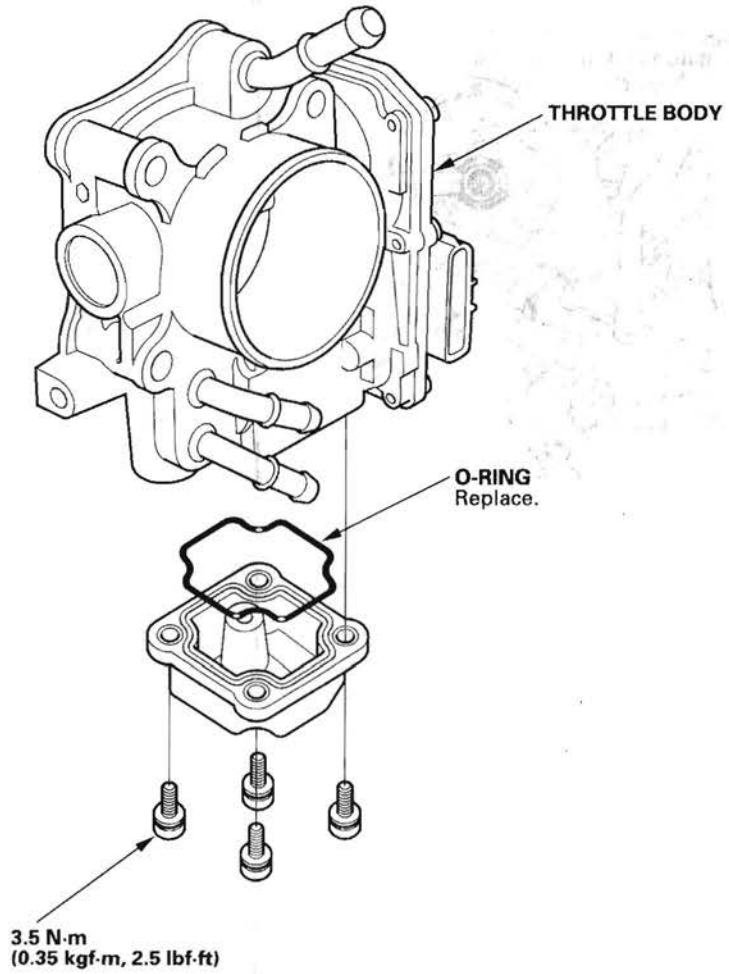

Intake Air Bypass Control Thermal Valve Replacement

1. Remove the intake manifold cover (see step 5 on page 9-3).
2. Remove the air intake duct.
3. Disconnect the hoses (A).

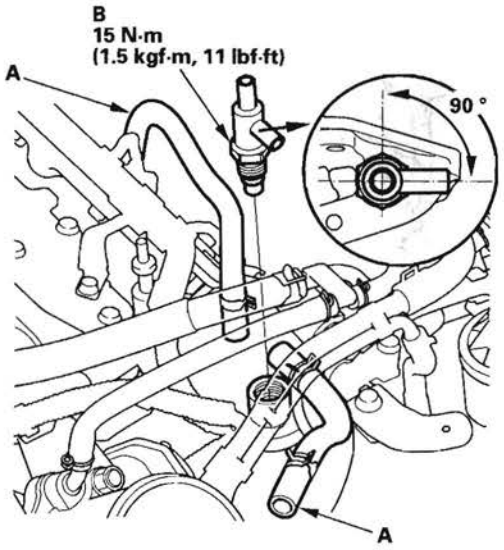

4. Remove the intake air bypass control thermal valve (B).
5. Install the parts in the reverse order of removal.

   NOTE: Position the valve as shown.

Component Location Index

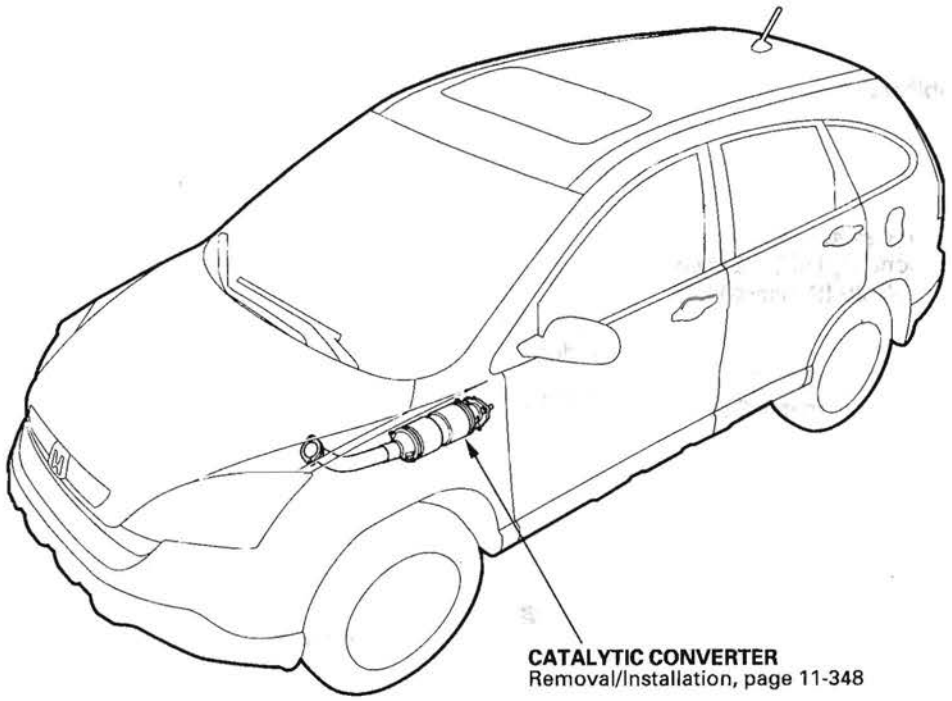

CATALYTIC CONVERTER
Removal/Installation, page 11-348

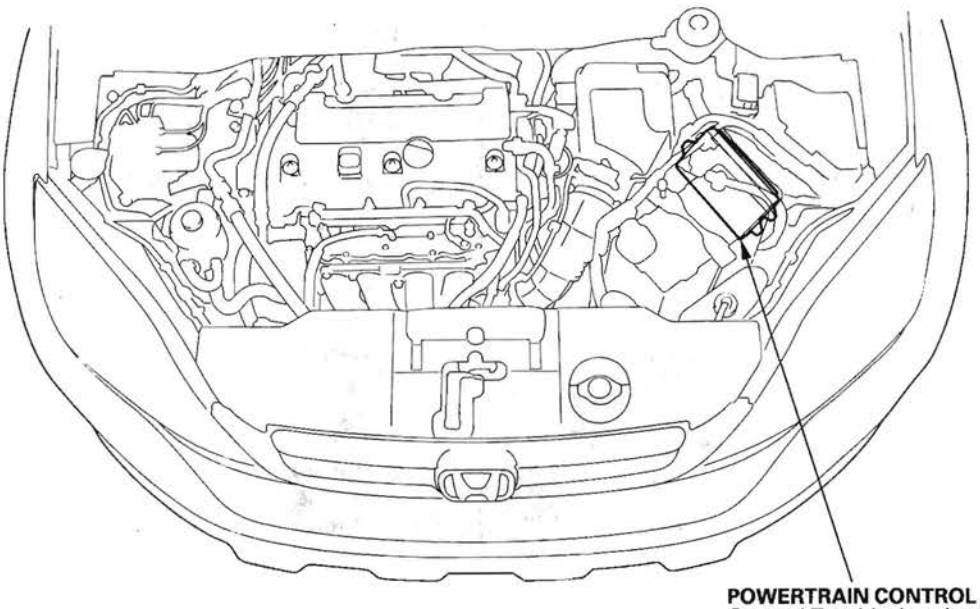

POWERTRAIN CONTROL MODULE (PCM)
General Troubleshooting information, page 11-3
Replacement, page 11-219

DTC Troubleshooting

DTC P0420: Catalyst System Efficiency Below Threshold

NOTE:
- Before you troubleshoot, record all freeze data and any on-board snapshot, and review the general troubleshooting information (see page 11-3).
- If some of the DTCs listed below are stored at the same time as DTC P0420, troubleshoot them first, then recheck for DTC P0420.
  P0137, P0138: Secondary HO2S (Sensor 2)
  P0141: Secondary HO2S (Sensor 2) heater
- P0300: Random misfire
  P0301—P0304: No. 1, No. 2, No. 3, or No. 4 cylinder misfire detected
- Poor quality fuel may cause this DTC.

1. Turn the ignition switch ON (II).
2. Clear the DTC with the HDS.
3. Start the engine. Hold the engine speed at 3,000 rpm without load (in Park or neutral) until the radiator fan comes on, then let it idle.
4. Test-drive under these conditions:
   - Engine coolant temperature (ECT SENSOR 1) above 158 °F (70 °C)
   - Transmission in D position
   - Vehicle speed between 45—75 mph (72—120 km/h) for 5 minutes or more with cruise control set
   - Maintain the vehicle speed at 55 mph (88 km/h) for 5 minutes or more with cruise control set
5. Monitor the OBD STATUS for DTC P0420 in the DTCs MENU with the HDS.

   Does the screen indicate EXECUTING?

   YES—Go to step 6.

   NO—Go to step 4 and recheck.
6. Continue test driving until a result comes on.
7. Monitor the OBD STATUS for DTC P0420 in the DTCs MENU with the HDS.

   Does the screen indicate FAILED?

   YES—Go to step 8.

   NO—If the screen indicates PASSED, intermittent failure, the system is OK at this time. If the screen indicates EXECUTING, keep driving until a result comes on. If the screen indicates OUT OF CONDITION, go to step 4 and recheck.
8. Turn the ignition switch OFF.
9. Replace the TWC (see page 11-348).
10. Turn the ignition switch ON (II).
11. Reset the PCM with the HDS.
12. Do the PCM idle learn procedure (see page 11-304).
13. Start the engine. Hold the engine speed at 3,000 rpm without load (in Park or neutral) until the radiator fan comes on, then let it idle.
14. Test-drive for about 10 minutes, varying the vehicle speed.
15. Check the CATA MONITOR CONDITION in the DATA LIST with the HDS.

    Is the temperature OK?

    YES—Go to step 16.

    NO—Go to step 13 and recheck.
16. Test-drive under these conditions:
    - Engine coolant temperature (ECT SENSOR 1) above 158 °F (70 °C)
    - Transmission in D position
    - Vehicle speed at 55 mph (88 km/h) for 5 minutes or more with cruise control set

17. Monitor the OBD STATUS for DTC P0420 in the DTCs MENU with the HDS.

    Does the screen indicate EXECUTING?

    YES—Go to step 18.

    NO—Go to step 16 and recheck.

18. Continue test-driving until a result comes on.

19. Check for Temporary DTCs or DTCs with the HDS.

    Is DTC P0420 indicated?

    YES—Check the fuel quality, then go to step 1.

    NO—Go to step 20.

20. Monitor the OBD STATUS for DTC P0420 in the DTCs MENU with the HDS.

    Does the screen indicate PASSED?

    YES—Troubleshooting is complete. If any other Temporary DTCs or DTCs were indicated in step 19, go to the indicated DTC's troubleshooting.■

    NO—If the screen indicates FAILED, check the fuel quality, then go to step 1. If the screen indicates EXECUTING, keep driving until a result comes on. If the screen indicates OUT OF CONDITION, go to step 13.

Catalytic Converter Removal/Installation

1. Lift the vehicle, and support it with jackstands.
2. Remove the A/F sensor (Sensor 1) (see page 11-214).
3. Remove the secondary HO2S (Sensor 2) (see page 11-214).
4. Remove the bolts (A), and the nuts (B).

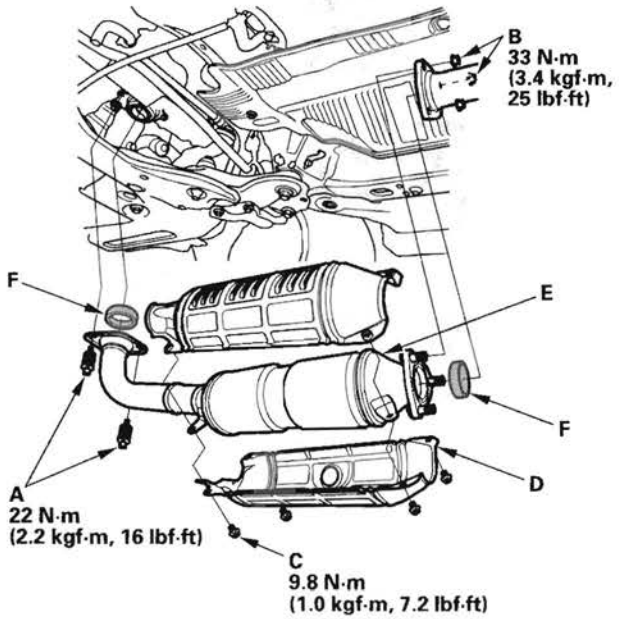

5. Remove the bolts (C), and the covers (D).
6. Remove the TWC (E).
7. Install the parts in the reverse order of removal with new gaskets (F).

Component Location Index

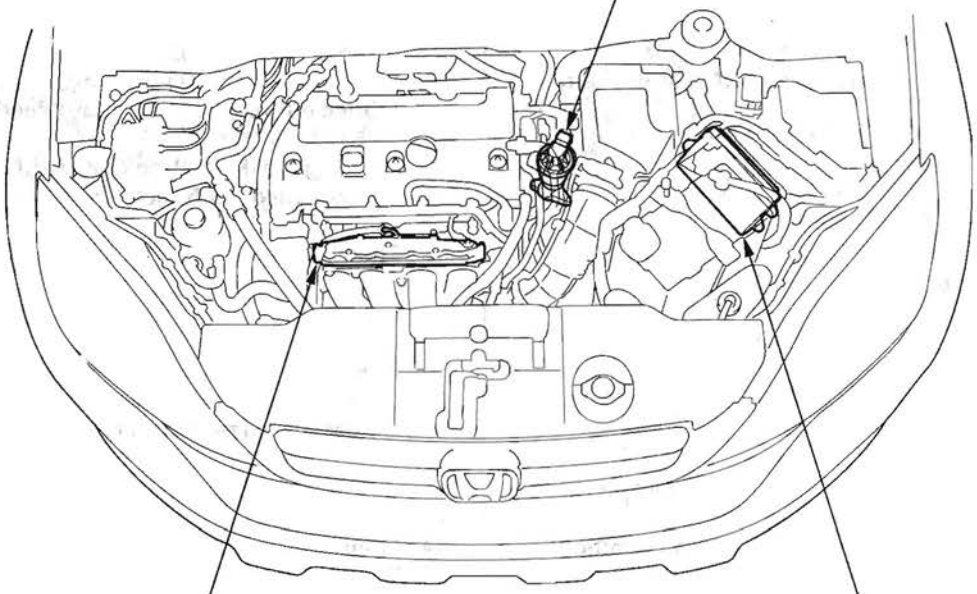

EXHAUST GAS RECIRCULATION (EGR) VALVE
Removal, page 11-364

EXHAUST GAS RECIRCULATION (EGR) PLATE
Removal, page 9-2

POWERTRAIN CONTROL MODULE (PCM)
General Troubleshooting information, page 11-3
Replacement, page 11-219

DTC Troubleshooting

DTC P0401: EGR Insufficient Flow

NOTE: Before you troubleshoot, record all freeze data and any on-board snapshot, and review the general troubleshooting information (see page 11-3).

1. Turn the ignition switch ON (II).
2. Clear the DTC with the HDS.
3. Start the engine. Hold the engine speed at 3,000 rpm without load (in Park or neutral) until the radiator fan comes on, then let it idle.
4. Do the EGR TEST in the INSPECTION MENU with the HDS.

   Is the result OK?

   YES—Go to step 5.

   NO—Go to step 7.
5. Test-drive under these conditions:

   - Engine coolant temperature (ECT SENSOR 1) above 158 °F (70 °C)
   - Transmission in D position
   - Drive the vehicle at a steady speed between 55—75 mph (88—120 km/h)
   - During the drive, decelerate (with the throttle fully closed) for 5 seconds
6. Monitor the OBD STATUS for DTC P0401 in the DTCs MENU with the HDS.

   Does the screen indicate FAILED?

   YES—Remove the EGR plate (see page 9-2), and clean the intake manifold EGR port and the passage inside the EGR valve with throttle plate and induction cleaner, then go to step 9.

   NO—If the screen indicates PASSED, intermittent failure, the system is OK at this time. Check for poor connections or loose terminals at the EGR valve and the PCM. If the screen indicates EXECUTING, keep driving until a result comes on. If the screen indicates OUT OF CONDITION, go to step 5 and recheck.
7. Turn the ignition switch OFF.
8. Replace the EGR valve (see page 11-364).
9. Turn the ignition switch ON (II).
10. Reset the PCM with the HDS.
11. Do the PCM idle learn procedure (see page 11-304).
12. Test-drive under these conditions:

    - Engine coolant temperature (ECT SENSOR 1) above 158 °F (70 °C)
    - Transmission in D position
    - Drive the vehicle at a steady speed between 55—75 mph (88—120 km/h)
    - During the drive, decelerate (with the throttle fully closed) for 5 seconds
13. Check for Temporary DTCs or DTCs with the HDS.

    Is DTC P0401 indicated?

    YES—Check for poor connections or loose terminals at the EGR valve and the PCM. If the connector and terminal fits are OK, go to step 15.

    NO—Go to step 14.
14. Monitor the OBD STATUS for DTC P0401 in the DTCs MENU with the HDS.

    Does the screen indicate PASSED?

    YES—Troubleshooting is complete. If any other Temporary DTCs or DTCs were indicated in step 13, go to the indicated DTC's troubleshooting. ■

    NO—If the screen indicates FAILED, check for poor connections or loose terminals at the EGR valve and the PCM, then go to step 1. If the screen indicates EXECUTING, keep driving until a result comes on. If the screen indicates OUT OF CONDITION, go to step 12.

15. Update the PCM if it does not have the latest software (see page 11-7), or substitute a known-good PCM (see page 11-8).

16. Test-drive under these conditions:

    - Engine coolant temperature (ECT SENSOR 1) above 158 °F (70 °C)
    - Transmission in D position
    - Drive the vehicle at a steady speed between 55—75 mph (88—120 km/h)
    - During the drive, decelerate (with the throttle fully closed) for 5 seconds

17. Check for Temporary DTCs or DTCs with the HDS.

    Is DTC P0401 indicated?

    YES—Check for poor connections or loose terminals at the EGR valve and the PCM. If the PCM was updated, substitute a known-good PCM (see page 11-8), then go to step 16. If the PCM was substituted, go to step 1.

    NO—Go to step 18.

18. Monitor the OBD STATUS for DTC P0401 in the DTCs MENU with the HDS.

    Does the screen indicate PASSED?

    YES—If the PCM was updated, troubleshooting is complete. If the PCM was substituted, replace the original PCM (see page 11-219). If any other Temporary DTCs or DTCs were indicated in step 17, go to the indicated DTC's troubleshooting. ■

    NO—If the screen indicates FAILED, check for poor connections or loose terminals at the EGR valve and the PCM. If the PCM was updated, substitute a known-good PCM (see page 11-8), then go to step 16. If the PCM was substituted, go to step 1. If the screen indicates EXECUTING, keep driving until a result comes on. If the screen indicates OUT OF CONDITION, go to step 16.

DTC Troubleshooting (cont'd)

DTC P0404: EGR Control Circuit Range/ Performance Problem

NOTE: Before you troubleshoot, record all freeze data and any on-board snapshot, and review the general troubleshooting information (see page 11-3).

1. Turn the ignition switch ON (II).
2. Clear the DTC with the HDS.
3. Start the engine. Hold the engine speed at 3,000 rpm without load (in Park or neutral) until the radiator fan comes on, then let it idle.
4. Do the EGR TEST in the INSPECTION MENU with the HDS.

   Is the result OK?

   YES—Intermittent failure, the system is OK at this time. Clean any carbon build-up on the EGR valve with throttle plate and induction cleaner.■

   NO—Go to step 5.
5. Turn the ignition switch OFF.
6. Disconnect the EGR valve 6P connector.
7. At the EGR valve side, measure resistance between EGR valve 6P connector terminals No. 1 and No. 2.

EGR VALVE 6P CONNECTOR

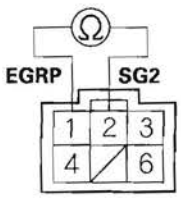

Terminal side of male terminals

Is there 100 kΩ or more?

YES—Go to step 25.

NO—Go to step 8.

8. Measure resistance between EGR valve 6P connector terminals No. 1 and No. 3.

EGR VALVE 6P CONNECTOR

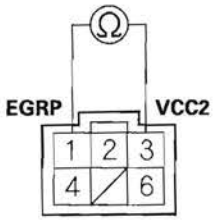

Terminal side of male terminals

Is there 100 kΩ or more?

YES—Go to step 25.

NO—Go to step 9.

9. Check for continuity between EGR valve 6P connector terminal No. 6 and body ground.

EGR VALVE 6P CONNECTOR

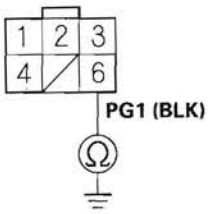

Wire side of female terminals

Is there continuity?

YES—Go to step 10.

NO—Repair open in the wire between the EGR valve and G101 (see page 22-16), then go to step 26.

10. Jump the SCS line with the HDS.

11. Disconnect PCM connector B (44P).

12. Check for continuity between PCM connector terminal B2 and body ground.

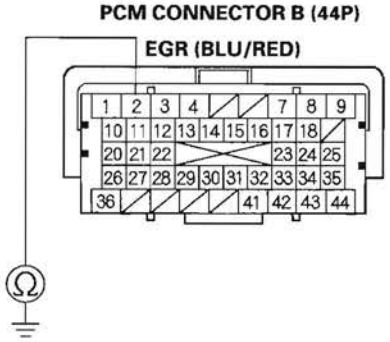

Terminal side of female terminals

Is there continuity?

YES—Repair short in the wire between the PCM (B2) and the EGR valve, then go to step 26.

NO—Go to step 13.

13. Check for continuity between PCM connector terminal B2 and EGR valve 6P connector terminal No. 4.

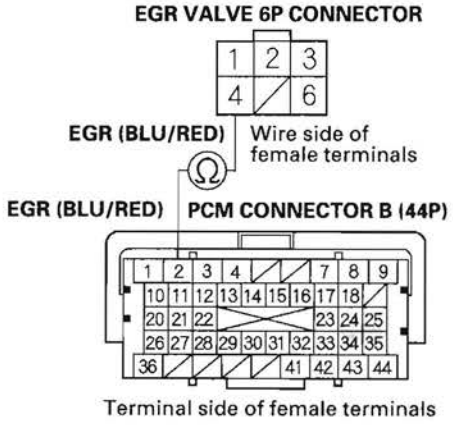

Terminal side of female terminals

Is there continuity?

YES—Go to step 14.

NO—Repair open in the wire between the PCM (B2) and the EGR valve, then go to step 26.

14. Remove the EGR valve (see page 11-364).

15. Remove the EGR plate (see page 9-2), and clean the intake manifold EGR port and the passage inside the EGR valve with throttle plate and induction cleaner.

16. Install the EGR valve (see page 11-364).

17. Reconnect the EGR valve 6P connector.

18. Reconnect PCM connector B (44P).

19. Turn the ignition switch ON (II).

20. Reset the PCM with the HDS.

21. Do the PCM idle learn procedure (see page 11-304).

22. Start the engine. Hold the engine speed at 3,000 rpm without load (in Park or neutral) until the radiator fan comes on, then let it idle.

23. Do the EGR TEST in the INSPECTION MENU with the HDS.

Is the result OK?

YES—Go to step 32.

NO—Go to step 24.

(cont'd)

DTC Troubleshooting (cont'd)

24. Turn the ignition switch OFF.
25. Replace the EGR valve (see page 11-364).
26. Reconnect all connectors.
27. Turn the ignition switch ON (II).
28. Reset the PCM with the HDS.
29. Do the PCM idle learn procedure (see page 11-304).
30. Start the engine. Hold the engine speed at 3,000 rpm without load (in Park or neutral) until the radiator fan comes on, then let it idle.
31. Do the EGR TEST in the INSPECTION MENU with the HDS.
32. Check for Temporary DTCs or DTCs with the HDS.

    Is DTC P0404 indicated?

    YES—Check for poor connections or loose terminals at the EGR valve and the PCM. If the connector and terminal fits are OK, go to step 34.

    NO—Go to step 33.

33. Monitor the OBD STATUS for DTC P0404 in the DTCs MENU with the HDS.

    Does the screen indicate PASSED?

    YES—Troubleshooting is complete. If any other Temporary DTCs or DTCs were indicated in step 32, go to the indicated DTC's troubleshooting. ■

    NO—If the screen indicates FAILED, check for poor connections or loose terminals at the EGR valve and the PCM, then go to step 1. If the screen indicates EXECUTING, keep testing until a result comes on. If the screen indicates OUT OF CONDITION, go to step 30.

34. Update the PCM if it does not have the latest software (see page 11-7), or substitute a known-good PCM (see page 11-8).
35. Do the EGR TEST in the INSPECTION MENU with the HDS.
36. Check for Temporary DTCs or DTCs with the HDS.

    Is DTC P0404 indicated?

    YES—Check for poor connections or loose terminals at the EGR valve and the PCM. If the PCM was updated, substitute a known-good PCM (see page 11-8), then go to step 35. If the PCM was substituted, go to step 1.

    NO—Go to step 37.

37. Monitor the OBD STATUS for DTC P0404 in the DTCs MENU with the HDS.

    Does the screen indicate PASSED?

    YES—If the PCM was updated, troubleshooting is complete. If the PCM was substituted, replace the original PCM (see page 11-219). If any other Temporary DTCs or DTCs were indicated in step 36, go to the indicated DTC's troubleshooting. ■

    NO—If the screen indicates FAILED, check for poor connections or loose terminals at the EGR valve and the PCM. If the PCM was updated, substitute a known-good PCM (see page 11-8), then go to step 35. If the PCM was substituted, go to step 1. If the screen indicates EXECUTING, keep testing until a result comes on. If the screen indicates OUT OF CONDITION, go to step 35.

DTC P0406: EGR Valve Position Sensor Circuit High Voltage

NOTE: Before you troubleshoot, record all freeze data and any on-board snapshot, and review the general troubleshooting information (see page 11-3).

1. Turn the ignition switch ON (II).
2. Check the EGR VLS in the DATA LIST with the HDS.

   Is 4.88 V or more indicated?

   YES—Go to step 3.

   NO—Intermittent failure, the system is OK at this time. Check for poor connections or loose terminals at the EGR valve and the PCM. ■
3. Turn the ignition switch OFF.
4. Disconnect the EGR valve 6P connector.
5. Turn the ignition switch ON (II).
6. Measure voltage between EGR valve 6P connector terminals No. 2 and No. 3.

EGR VALVE 6P CONNECTOR

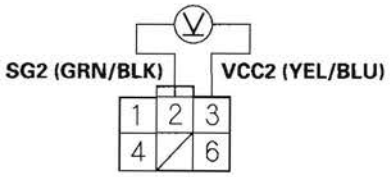

Wire side of female terminals

Is there about 5 V?

YES—Go to step 11.

NO—Go to step 7.

7. Turn the ignition switch OFF.
8. Jump the SCS line with the HDS.
9. Disconnect PCM connector B (44P).
10. Check for continuity between PCM connector terminal B33 and EGR valve 6P connector terminal No. 2.

EGR VALVE 6P CONNECTOR

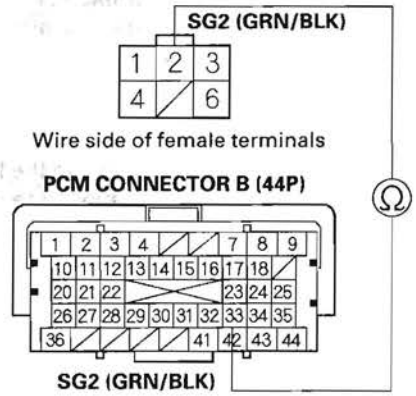

Is there continuity?

YES—Go to step 18.

NO—Repair open in the wire between the EGR valve and the PCM (B33), then go to step 13.

11. Turn the ignition switch OFF.
12. Replace the EGR valve (see page 11-364).
13. Reconnect all connectors.
14. Turn the ignition switch ON (II).
15. Reset the PCM with the HDS.

(cont'd)

DTC Troubleshooting (cont'd)

16. Do the PCM idle learn procedure (see page 11-304).

17. Check for Temporary DTCs or DTCs with the HDS.

    Is DTC P0406 indicated?

    YES—Check for poor connections or loose terminals at the EGR valve and the PCM, then go to step 1.

    NO—Troubleshooting is complete. If any other Temporary DTCs or DTCs are indicated, go to the indicated DTC's troubleshooting. ■

18. Reconnect all connectors.

19. Update the PCM if it does not have the latest software (see page 11-7), or substitute a known-good PCM (see page 11-8).

20. Check for Temporary DTCs or DTCs with the HDS.

    Is DTC P0406 indicated?

    YES—Check for poor connections or loose terminals at the EGR valve and the PCM. If the PCM was updated, substitute a known-good PCM (see page 11-8), then recheck. If the PCM was substituted, go to step 1.

    NO—If the PCM was updated, troubleshooting is complete. If the PCM was substituted, replace the original PCM (see page 11-219). If any other Temporary DTCs or DTCs are indicated, go to the indicated DTC's troubleshooting. ■

DTC P2413: EGR System Malfunction

NOTE: Before you troubleshoot, record all freeze data and any on-board snapshot, and review the general troubleshooting information (see page 11-3).

1. Turn the ignition switch ON (II).
2. Clear the DTC with the HDS.
3. Start the engine. Hold the engine speed at 3,000 rpm without load (in Park or neutral) until the radiator fan comes on, then let it idle.
4. Do the EGR TEST in the INSPECTION MENU with the HDS.

   Is the result OK?

   YES—Intermittent failure, the system is OK at this time. Check for poor connections or loose terminals at the EGR valve and the PCM. ■

   NO—Go to step 5.
5. Turn the ignition switch OFF.
6. Turn the ignition switch ON (II).
7. Check the EGR VLS in the DATA LIST with the HDS.

   Is about 0 V indicated?

   YES—Go to step 8.

   NO—Go to step 21.
8. Turn the ignition switch OFF.
9. Disconnect the EGR valve 6P connector.
10. Turn the ignition switch ON (II).
11. Measure voltage between EGR valve 6P connector terminal No. 3 and body ground.

EGR VALVE 6P CONNECTOR

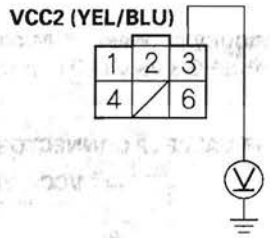

Wire side of female terminals

Is there about 5 V?

YES—Go to step 16.

NO—Go to step 12.

(cont'd)

DTC Troubleshooting (cont'd)

12. Turn the ignition switch OFF.
13. Jump the SCS line with the HDS.
14. Disconnect PCM connector B (44P).
15. Check for continuity between PCM connector terminal B18 and EGR valve 6P connector terminal No. 3.

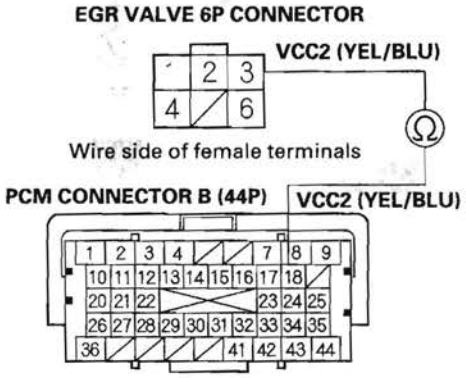

Terminal side of female terminals

Is there continuity?

YES—Go to step 52.

NO—Repair open in the wire between the EGR valve and the PCM (B18), then go to step 44.

16. Turn the ignition switch OFF.
17. Jump the SCS line with the HDS.
18. Disconnect PCM connector B (44P).
19. Check for continuity between PCM connector terminal B29 and body ground.

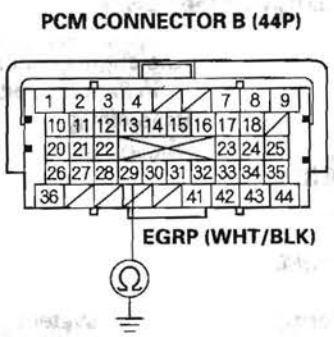

Terminal side of female terminals

Is there continuity?

YES—Repair short in the wire between the PCM (B29) and the EGR valve, then go to step 44.

NO—Go to step 20.

20. Check for continuity between PCM connector terminal B29 and EGR valve 6P connector terminal No. 1.

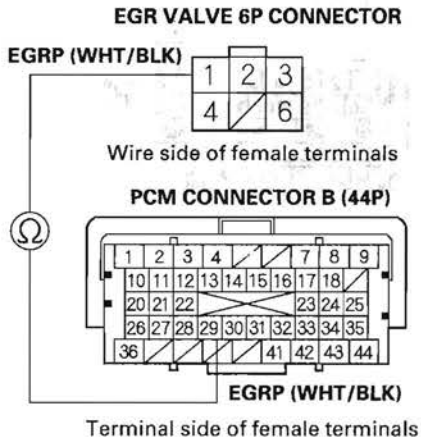

Is there continuity?

YES—Go to step 21.

NO—Repair open in the wire between the PCM (B29) and the EGR valve, then go to step 44.

21. Turn the ignition switch OFF.

22. If not already done, disconnect the EGR valve 6P connector.

23. At the EGR valve side, measure resistance between EGR valve 6P connector terminals No. 1 and No. 2.



Is there 100 kΩ or more?

YES—Go to step 43.

NO—Go to step 24.

(cont'd)

DTC Troubleshooting (cont'd)

24. At the EGR valve side, measure resistance between EGR valve 6P connector terminals No. 1 and No. 3.

EGR VALVE 6P CONNECTOR

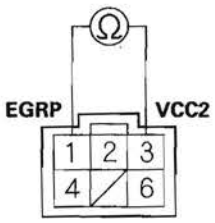

Terminal side of male terminals

Is there 100 kΩ or more?

YES—Go to step 43.

NO—Go to step 25.

25. If not already done, jump the SCS line with the HDS.

26. If not already done, disconnect PCM connector B (44P).

27. Check for continuity between PCM connector terminal B2 and body ground.

PCM CONNECTOR B (44P)

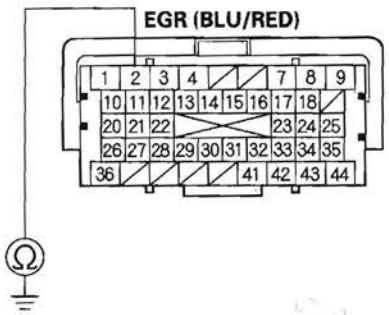

Terminal side of female terminals

Is there continuity?

YES—Repair short in the wire between the PCM (B2) and the EGR valve, then go to step 44.

NO—Go to step 28.

28. Check for continuity between PCM connector terminal B2 and EGR valve 6P connector terminal No. 4.

EGR VALVE 6P CONNECTOR

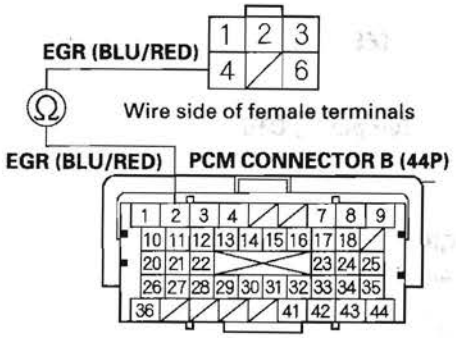

Is there continuity?

YES—Go to step 29.

NO—Repair open in the wire between the PCM (B2) and the EGR valve, then go to step 44.

29. Check for continuity between EGR valve 6P connector terminal No. 6 and body ground.

EGR VALVE 6P CONNECTOR

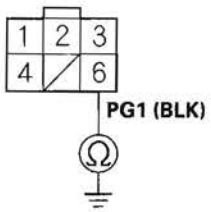

Is there continuity?

YES—Go to step 30.

NO—Repair open in the wire between the EGR valve and G101 (see page 22-16), then go to step 44.

30. Reconnect PCM connector B (44P).

31. At the EGR valve side, connect the battery positive terminal to EGR valve 6P connector terminal No. 4 with a jumper wire.

EGR VALVE 6P CONNECTOR

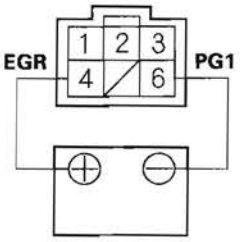

32. Start the engine, and let it idle. Then connect the battery negative terminal to EGR valve 6P connector terminal No. 6 with a jumper wire.

Does the engine stall or run roughly?

YES—Go to step 51.

NO—Go to step 33.

(cont'd)

DTC Troubleshooting (cont'd)

33. Turn the ignition switch OFF.
34. Remove the EGR valve (see page 11-364).
35. Clean the intake manifold EGR port with throttle plate and induction cleaner. Also, clean the passage inside the EGR valve with throttle plate and induction cleaner.
36. Install the EGR valve (see page 11-364).
37. Reconnect all connectors.
38. Turn the ignition switch ON (II).
39. Reset the PCM with the HDS.
40. Do the PCM idle learn procedure (see page 11-304).
41. Do the EGR TEST in the INSPECTION MENU with the HDS.

    Is the result OK?

    YES—Go to step 49.

    NO—Go to step 42.
42. Turn the ignition switch OFF.
43. Replace the EGR valve (see page 11-364).
44. Reconnect all connectors.
45. Turn the ignition switch ON (II).
46. Reset the PCM with the HDS.
47. Do the PCM idle learn procedure (see page 11-304).
48. Do the EGR TEST in the INSPECTION MENU with the HDS.
49. Check for Temporary DTCs or DTCs with the HDS.

    Is DTC P2413 indicated?

    YES—Check for poor connections or loose terminals at the EGR valve and the PCM, then go to step 1.

    NO—Go to step 50.
50. Monitor the OBD STATUS for DTC P2413 in the DTCs MENU with the HDS.

    Does the screen indicate PASSED?

    YES—Troubleshooting is complete. If any other Temporary DTCs or DTCs were indicated in step 49, go to the indicated DTC's troubleshooting. ■

    NO—If the screen indicates FAILED, check for poor connections or loose terminals at the EGR valve and the PCM, then go to step 1. If the screen indicates EXECUTING, keep testing until a result comes on. If the screen indicates OUT OF CONDITION, go to step 48.

51. Turn the ignition switch OFF.

52. Reconnect all connectors.

53. Update the PCM if it does not have the latest software (see page 11-7), or substitute a known-good PCM (see page 11-8).

54. Do the EGR TEST in the INSPECTION MENU with the HDS.

55. Check for Temporary DTCs or DTCs with the HDS.

    Is DTC P2413 indicated?

    YES—Check for poor connections or loose terminals at the EGR valve and the PCM. If the PCM was updated, substitute a known-good PCM (see page 11-8), then go to step 54. If the PCM was substituted, go to step 1.

    NO—Go to step 56.

56. Monitor the OBD STATUS for DTC P2413 in the DTCs MENU with the HDS.

    Does the screen indicate PASSED?

    YES—If the PCM was updated, troubleshooting is complete. If the PCM was substituted, replace the original PCM (see page 11-219). If any other Temporary DTCs or DTCs were indicated in step 55, go to the indicated DTC's troubleshooting. ■

    NO—If the screen indicates FAILED, check for poor connections or loose terminals at the EGR valve and the PCM. If the PCM was updated, substitute a known-good PCM (see page 11-8), then go to step 54. If the PCM was substituted, go to step 1. If the screen indicates EXECUTING, keep testing until a result comes on. If the screen indicates OUT OF CONDITION, go to step 54 and recheck.

EGR Valve Replacement

1. Remove the air cleaner (see page 11-340).
2. Relieve the fuel pressure (see page 11-317).
3. Remove the fuel line (A). Disconnect the hose (B).

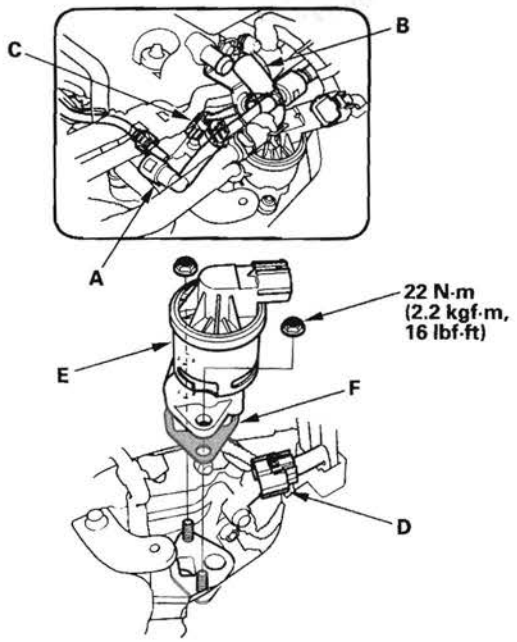

4. Disconnect the CMP sensor A connector (C).
5. Remove the EGR valve 6P connector (D).
6. Remove the EGR valve (E).
7. Install the parts in the reverse order of removal with a new gasket (F).

Component Location Index

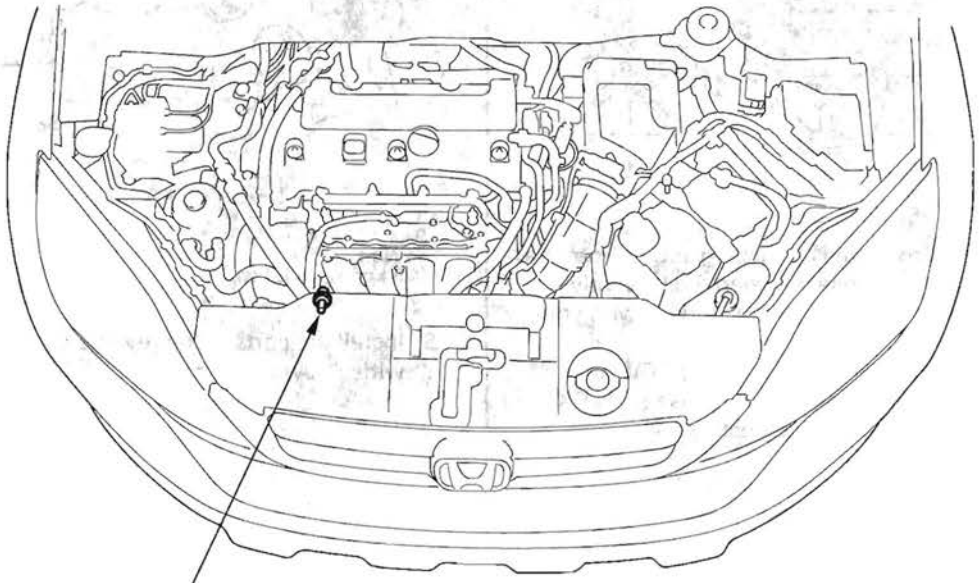

PCV VALVE
Inspection, page 11-366
Replacement, page 11-366

PCV Valve Inspection

1. Check the PCV valve (A), hoses (B), and connections for leaks or restrictions.

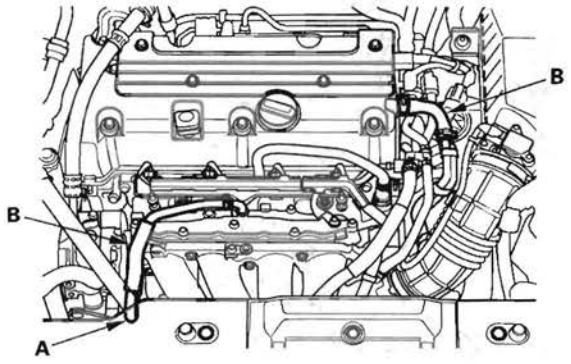

2. At idle, make sure there is a clicking sound from the PCV valve when the hose between the PCV valve and intake manifold is lightly pinched (A) with your fingers or pliers.
   If there is no clicking sound, check the PCV valve washer for cracks or damage. If the washer is OK, replace the PCV valve and recheck.

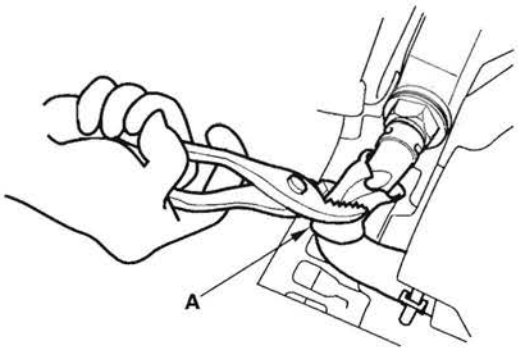

PCV Valve Replacement

1. Disconnect the PCV hose.
2. Remove the PCV valve (A).

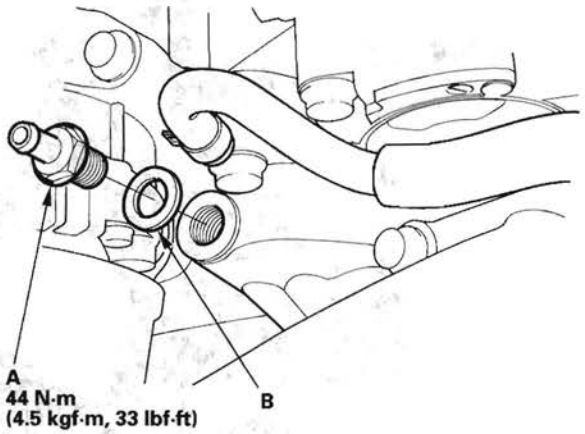

3. Install the parts in the reverse order of removal with a new washer (B).

Component Location Index

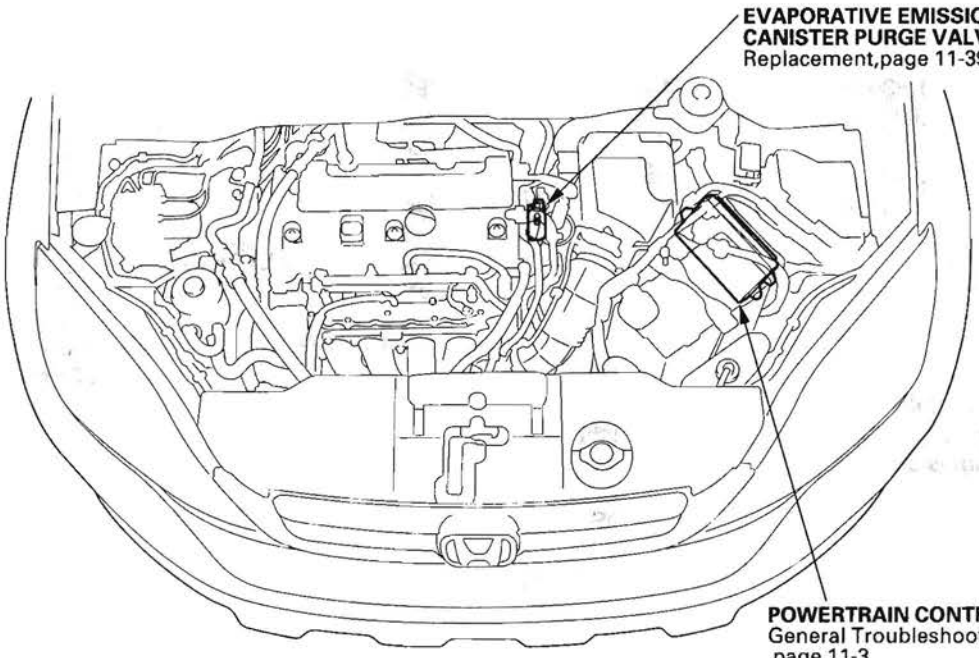

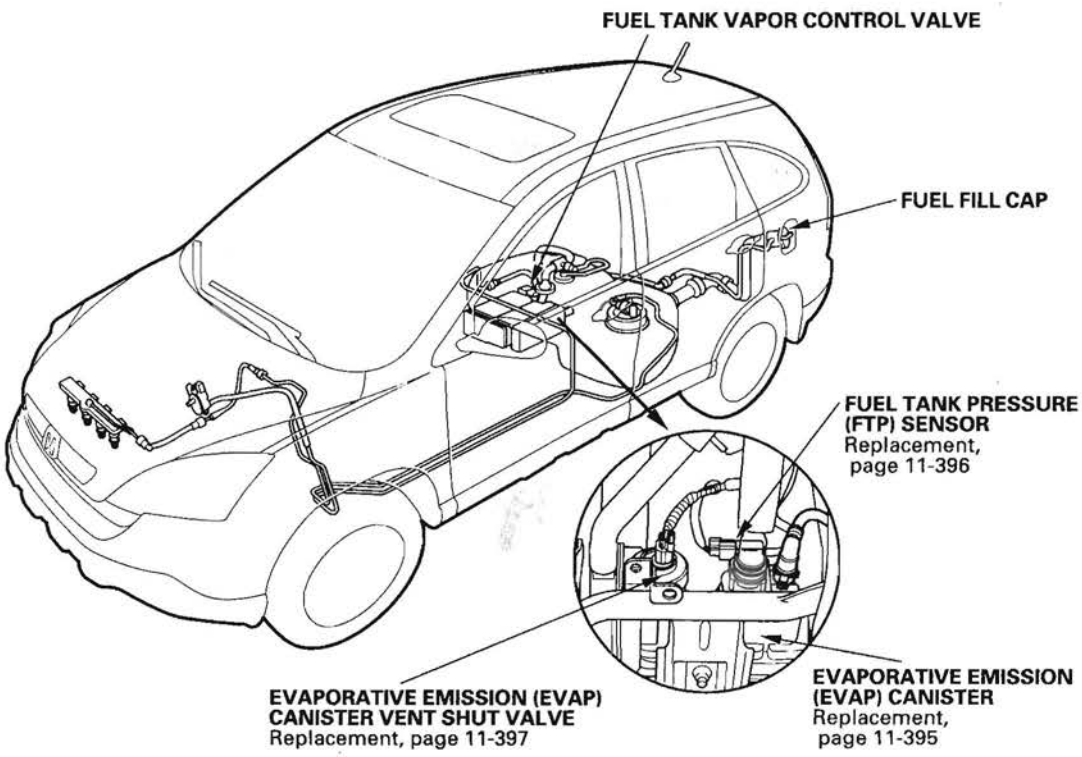

DTC Troubleshooting

DTC P0443: EVAP Canister Purge Valve Circuit Malfunction

Special Tools Required
Vacuum pump/gauge, 0—30 in.Hg, Snap-on YA4000A or equivalent, commercially available

NOTE: Before you troubleshoot, record all freeze data and any on-board snapshot, and review the general troubleshooting information (see page 11-3).

1. Turn the ignition switch ON (II).
2. Clear the DTC with the HDS.
3. Start the engine. Hold the engine speed at 3,000 rpm without load (in Park or neutral) until the radiator fan comes on, then let it idle.
4. Check for Temporary DTCs or DTCs with the HDS.

   Is DTC P0443 indicated?

   YES—Go to step 5.

   NO—Intermittent failure, the system is OK at this time. Check for poor connections or loose terminals at the EVAP canister purge valve and the PCM. ■
5. Turn the ignition switch OFF, and allow the engine to cool below 140 °F (60 °C).
6. Disconnect the vacuum hose (A) from the purge valve (B) in the engine compartment, and connect a vacuum pump/gauge, 0—30 in.Hg, to the hose.

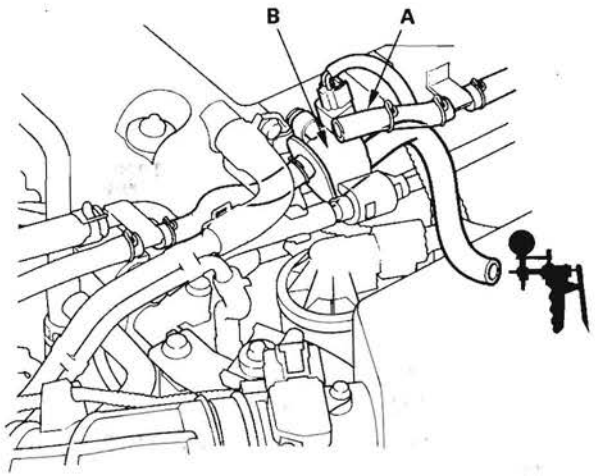

7. Start the engine, and let it idle.

   Is there vacuum?

   YES—Go to step 8.

   NO—Go to step 14.
8. Turn the ignition switch OFF.
9. Disconnect the EVAP canister purge valve 2P connector.
10. Check for continuity between EVAP canister purge valve 2P connector terminal No. 2 and body ground.

EVAP CANISTER PURGE VALVE 2P CONNECTOR

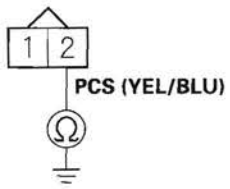

Wire side of female terminals

Is there continuity?

YES—Go to step 11.

NO—Go to step 23.

11. Jump the SCS line with the HDS.
12. Disconnect PCM connector B (44P).
13. Check for continuity between EVAP canister purge valve 2P connector terminal No. 2 and body ground.

EVAP CANISTER PURGE VALVE 2P CONNECTOR

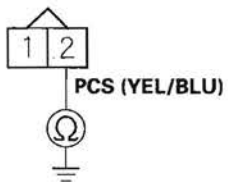

Wire side of female terminals

Is there continuity?

YES—Repair short in the wire between the EVAP canister purge valve and the PCM (B3), then go to step 24.

NO—Go to step 30.

14. Turn the ignition switch OFF.
15. Disconnect the EVAP canister purge valve 2P connector.
16. Turn the ignition switch ON (II).
17. Measure voltage between EVAP canister purge valve 2P connector terminal No. 1 and body ground.

EVAP CANISTER PURGE VALVE 2P CONNECTOR



Wire side of female terminals

Is there battery voltage?

YES—Go to step 18.

NO—Repair open in the wire between the EVAP canister purge valve and the No. 3 ALTERNATOR (10 A) fuse in the under-dash fuse/relay box, then go to step 24.

18. Turn the ignition switch OFF.
19. Jump the SCS line with the HDS.
20. Disconnect PCM connector B (44P).

(cont'd)

DTC Troubleshooting (cont'd)

21. Check for continuity between PCM connector terminal B3 and EVAP canister purge valve 2P connector terminal No. 2.

EVAP CANISTER PURGE VALVE 2P CONNECTOR

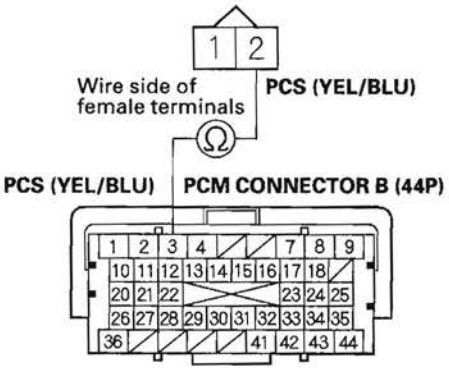

Terminal side of female terminals

Is there continuity?

YES—Go to step 22.

NO—Repair open in the wire between the EVAP canister purge valve and the PCM (B3), then go to step 24.

22. Measure resistance between EVAP canister purge valve 2P connector terminals No. 1 and No. 2.

EVAP CANISTER PURGE VALVE 2P CONNECTOR

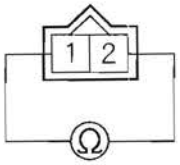

Terminal side of male terminals

Is there about 33 Ω at room temperature?

YES—Go to step 30.

NO—Go to step 23.

23. Replace the EVAP canister purge valve (see page 11-397).

24. Reconnect all connectors.

25. Turn the ignition switch ON (II).

26. Reset the PCM with the HDS.

27. Do the PCM idle learn procedure (see page 11-304).

28. Check for Temporary DTCs or DTCs with the HDS.

    Is DTC P0443 indicated?

    YES—Check for poor connections or loose terminals at the EVAP canister purge valve and the PCM, then go to step 1.

    NO—Go to step 29.

29. Monitor the OBD STATUS for DTC P0443 in the DTCs MENU with the HDS.

    Does the screen indicate PASSED?

    YES—Troubleshooting is complete. If any other Temporary DTCs or DTCs were indicated in step 28, go to the indicated DTC's troubleshooting. ■

    NO—If the screen indicates FAILED, check for poor connections or loose terminals at the EVAP canister purge valve and the PCM, then go to step 1. If the screen indicates EXECUTING, keep idling until a result comes on. If the screen indicates OUT OF CONDITION, go to step 27.

30. Reconnect all connectors.

31. Update the PCM if it does not have the latest software (see page 11-7), or substitute a known-good PCM (see page 11-8).

32. Start the engine.

33. Check for Temporary DTCs or DTCs with the HDS.

    Is DTC P0443 indicated?

    YES—Check for poor connections or loose terminals at the EVAP canister purge valve and the PCM. If the PCM was updated, substitute a known-good PCM (see page 11-8), then go to step 32. If the PCM was substituted, go to step 1.

    NO—Go to step 34.

34. Monitor the OBD STATUS for DTC P0443 in the DTCs MENU with the HDS.

    Does the screen indicate PASSED?

    YES—If the PCM was updated, troubleshooting is complete. If the PCM was substituted, replace the original PCM (see page 11-219). If any other Temporary DTCs or DTCs were indicated in step 33, go to the indicated DTC's troubleshooting. ■

    NO—If the screen indicates FAILED, check for poor connections or loose terminals at the EVAP canister purge valve and the PCM. If the PCM was updated, substitute a known-good PCM (see page 11-8), then go to step 32. If the PCM was substituted, go to step 1. If the screen indicates EXECUTING, keep idling until a result comes on. If the screen indicates OUT OF CONDITION, go to step 32.

DTC Troubleshooting (cont'd)

DTC P0451: FTP Sensor Range/Performance Problem

NOTE:
- Before you troubleshoot, record all freeze data and any on-board snapshot, and review the general troubleshooting information (see page 11-3).
- If DTC P2422 is stored at the same time as DTC P0451, troubleshoot DTC P2422 first, then recheck for DTC P0451.

1. Turn the ignition switch ON (II).
2. Clear the DTC with the HDS.
3. Start the engine, and let it idle for 1 minute.
4. Monitor the OBD STATUS for DTC P0451 in the DTCs MENU with the HDS.

   Does the screen indicate FAILED?

   YES—Go to step 5.

   NO—If the screen indicates PASSED, intermittent failure, the system is OK at this time. Check for poor connections or loose terminals at the FTP sensor and the PCM. If the screen indicates NOT COMPLETED, go to step 3 and recheck.
5. Turn the ignition switch OFF.
6. Replace the FTP sensor (see page 11-396).
7. Turn the ignition switch ON (II).
8. Reset the PCM with the HDS.
9. Do the PCM idle learn procedure (see page 11-304).
10. Start the engine, and let it idle for 1 minute.
11. Check for Temporary DTCs or DTCs with the HDS.

    Is DTC P0451 indicated?

    YES—Check for poor connections or loose terminals at the FTP sensor and the PCM, then go to step 1.

    NO—Go to step 12.
12. Monitor the OBD STATUS for DTC P0451 in the DTCs MENU with the HDS.

    Does the screen indicate PASSED?

    YES—Troubleshooting is complete. If any other Temporary DTCs or DTCs were indicated in step 11, go to the indicated DTC's troubleshooting. ■

    NO—If the screen indicates FAILED, check for poor connections or loose terminals at the FTP sensor and the PCM, then go to step 1. If the screen indicates NOT COMPLETED, go to step 10.

DTC P0452: FTP Sensor Circuit Low Voltage

NOTE: Before you troubleshoot, record all freeze data and any on-board snapshot, and review the general troubleshooting information (see page 11-3).

1. Turn the ignition switch ON (II).
2. Clear the DTC with the HDS.
3. Turn the ignition switch OFF.
4. Remove the fuel fill cap.
5. Turn the ignition switch ON (II).
6. Check the FTP SENSOR in the DATA LIST with the HDS.

   Is about −7.3 kPa (−2.16 in.Hg, −55 mmHg), or 0.3 V or less indicated?

   YES—Go to step 10.

   NO—Go to step 7.
7. Install the fuel fill cap.
8. Start the engine.
9. Monitor the OBD STATUS for DTC P0452 in the DTCs MENU with the HDS.

   Does the screen indicate FAILED?

   YES—Go to step 10.

   NO—If the screen indicates PASSED, intermittent failure, the system is OK at this time. Check for poor connections or loose terminals at the FTP sensor and the PCM. If the screen indicates NOT COMPLETED, go to step 4 and recheck.
10. Turn the ignition switch OFF.
11. Disconnect the FTP sensor 3P connector.
12. Turn the ignition switch ON (II).
13. Check the FTP SENSOR in the DATA LIST with the HDS.

    Is about 7.3 kPa (2.15 in.Hg, 54.7 mmHg) or 4.90 V or more indicated?

    YES—Go to step 24.

    NO—Go to step 14.
14. Measure voltage between FTP sensor 3P connector terminal No. 1 and body ground.

FTP SENSOR 3P CONNECTOR

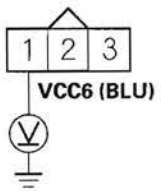

Wire side of female terminals

Is there about 5 V?

YES—Go to step 20.

NO—Go to step 15.

(cont'd)

DTC Troubleshooting (cont'd)

15. Turn the ignition switch OFF.
16. Jump the SCS line with the HDS.
17. Disconnect PCM connector A (44P).
18. Connect FTP sensor 3P connector terminal No. 1 to body ground with a jumper wire.

FTP SENSOR 3P CONNECTOR

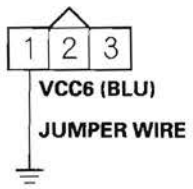

Wire side of female terminals

19. Check for continuity between PCM connector terminal A19 and body ground.

PCM CONNECTOR A (44P)

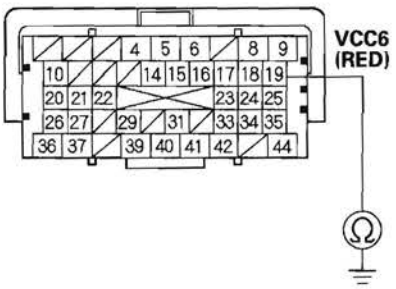

Terminal side of female terminals

Is there continuity?

YES—Go to step 32.

NO—Repair open in the wire between the PCM (A19) and the FTP sensor, then go to step 26.

20. Turn the ignition switch OFF.
21. Jump the SCS line with the HDS.
22. Disconnect PCM connector A (44P).
23. Check for continuity between FTP sensor 3P connector terminal No. 2 and body ground.

FTP SENSOR 3P CONNECTOR

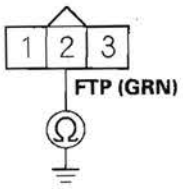

Wire side of female terminals

Is there continuity?

YES—Repair short in the wire between the PCM (A26) and the FTP sensor, then go to step 26.

NO—Go to step 32.

24. Turn the ignition switch OFF.

25. Replace the FTP sensor (see page 11-396).

26. Reconnect all connectors.

27. Turn the ignition switch ON (II).

28. Reset the PCM with the HDS.

29. Do the PCM idle learn procedure (see page 11-304).

30. Check for Temporary DTCs or DTCs with the HDS.

    Is DTC P0452 indicated?

    YES—Check for poor connections or loose terminals at the FTP sensor and the PCM, then go to step 1.

    NO—Go to step 31.

31. Monitor the OBD STATUS for DTC P0452 in the DTCs MENU with the HDS.

    Does the screen indicate PASSED?

    YES—Troubleshooting is complete. If any other Temporary DTCs or DTCs were indicated in step 30, go to the indicated DTC's troubleshooting.■

    NO—If the screen indicates FAILED, check for poor connections or loose terminals at the FTP sensor and the PCM, then go to step 1. If the screen indicates NOT COMPLETED, go to step 29.

32. Reconnect all connectors.

33. Update the PCM if it does not have the latest software (see page 11-7), or substitute a known-good PCM (see page 11-8).

34. Start the engine.

35. Check for Temporary DTCs or DTCs with the HDS.

    Is DTC P0452 indicated?

    YES—Check for poor connections or loose terminals at the FTP sensor and the PCM. If the PCM was updated, substitute a known-good PCM (see page 11-8), then go to step 34. If the PCM was substituted, go to step 1.

    NO—Go to step 36.

36. Monitor the OBD STATUS for DTC P0452 in the DTCs MENU with the HDS.

    Does the screen indicate PASSED?

    YES—If the PCM was updated, troubleshooting is complete. If the PCM was substituted, replace the original PCM (see page 11-219). If any other Temporary DTCs or DTCs were indicated in step 35, go to the indicated DTC's troubleshooting.■

    NO—If the screen indicates FAILED, check for poor connections or loose terminals at the FTP sensor and the PCM. If the PCM was updated, substitute a known-good PCM (see page 11-8), then go to step 34. If the PCM was substituted, go to step 1. If the screen indicates NOT COMPLETED, let the engine idle until a result comes on.

DTC Troubleshooting (cont'd)

DTC P0453: FTP Sensor Circuit High Voltage

NOTE: Before you troubleshoot, record all freeze data and any on-board snapshot, and review the general troubleshooting information (see page 11-3).

1. Turn the ignition switch ON (II).
2. Clear the DTC with the HDS.
3. Turn the ignition switch OFF.
4. Remove the fuel fill cap.
5. Turn the ignition switch ON (II).
6. Check the FTP SENSOR in the DATA LIST with the HDS.

   Is about 7.3 kPa (2.16 in.Hg, 55 mmHg), or 4.7 V or more indicated?

   YES—Go to step 10.

   NO—Go to step 7.
7. Install the fuel fill cap.
8. Start the engine.
9. Monitor the OBD STATUS for DTC P0453 in the DTCs MENU with the HDS.

   Does the screen indicate FAILED?

   YES—Go to step 10.

   NO—If the screen indicates PASSED, intermittent failure, the system is OK at this time. Check for poor connections or loose terminals at the FTP sensor and the PCM. If the screen indicates NOT COMPLETED, go to step 6 and recheck.
10. Turn the ignition switch OFF.
11. Disconnect the FTP sensor 3P connector.
12. Connect FTP sensor 3P connector terminals No. 2 and No. 3 with a jumper wire.

FTP SENSOR 3P CONNECTOR

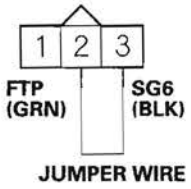

JUMPER WIRE

Wire side of female terminals

13. Turn the ignition switch ON (II).
14. Check the FTP SENSOR in the DATA LIST with the HDS.

    Is about 7.3 kPa (2.16 in.Hg, 55 mmHg), or 4.7 V or more indicated?

    YES—Go to step 15.

    NO—Go to step 26.
15. Measure voltage between FTP sensor 3P connector terminals No. 1 and No. 3.

FTP SENSOR 3P CONNECTOR

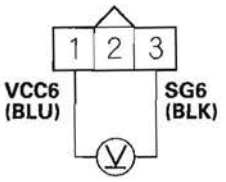

Wire side of female terminals

Is there about 5 V?

YES—Go to step 21.

NO—Go to step 16.

16. Turn the ignition switch OFF.
17. Jump the SCS line with the HDS.
18. Disconnect PCM connector A (44P).
19. Connect FTP sensor 3P connector terminal No. 3 to body ground with a jumper wire.

FTP SENSOR 3P CONNECTOR

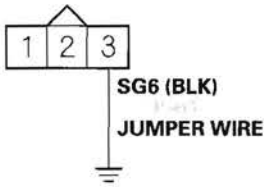

Wire side of female terminals

20. Check for continuity between PCM connector terminal A9 and body ground.

PCM CONNECTOR A (44P)

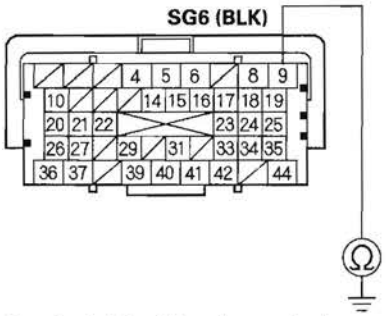

Terminal side of female terminals

Is there continuity?

YES—Go to step 34.

NO—Repair open in the wire between the PCM (A9) and the FTP sensor, then go to step 28.

21. Turn the ignition switch OFF.
22. Jump the SCS line with the HDS.
23. Disconnect PCM connector A (44P).
24. Connect FTP sensor 3P connector terminal No. 2 to body ground with a jumper wire.

FTP SENSOR 3P CONNECTOR

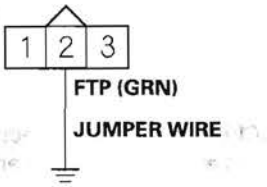

Wire side of female terminals

25. Check for continuity between PCM connector terminal A26 and body ground.

PCM CONNECTOR A (44P)

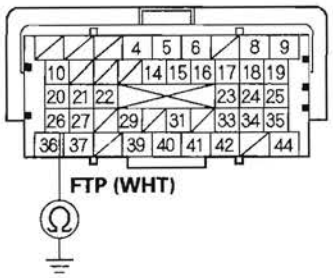

Terminal side of female terminals

Is there continuity?

YES—Go to step 34.

NO—Repair open in the wire between the PCM (A26) and the FTP sensor, then go to step 28.

(cont'd)

DTC Troubleshooting (cont'd)

26. Turn the ignition switch OFF.
27. Replace the FTP sensor (see page 11-396).
28. Reconnect all connectors.
29. Turn the ignition switch ON (II).
30. Reset the PCM with the HDS.
31. Do the PCM idle learn procedure (see page 11-304).
32. Check for Temporary DTCs or DTCs with the HDS.

    Is DTC P0453 indicated?

    YES—Check for poor connections or loose terminals at the FTP sensor and the PCM, then go to step 1.

    NO—Go to step 33.

33. Monitor the OBD STATUS for DTC P0453 in the DTCs MENU with the HDS.

    Does the screen indicate PASSED?

    YES—Troubleshooting is complete. If any other Temporary DTCs or DTCs were indicated in step 32, go to the indicated DTC's troubleshooting.■

    NO—If the screen indicates FAILED, check for poor connections or loose terminals at the FTP sensor and the PCM, then go to step 1. If the screen indicates NOT COMPLETED, go to step 31.

34. Reconnect all connectors.
35. Update the PCM if it does not have the latest software (see page 11-7), or substitute a known-good PCM (see page 11-8).
36. Start the engine.
37. Check for Temporary DTCs or DTCs with the HDS.

    Is DTC P0453 indicated?

    YES—Check for poor connections or loose terminals at the FTP sensor and the PCM. If the PCM was updated, substitute a known-good PCM (see page 11-8), then go to step 35. If the PCM was substituted, go to step 1.

    NO—Go to step 38.

38. Monitor the OBD STATUS for DTC P0453 in the DTCs MENU with the HDS.

    Does the screen indicate PASSED?

    YES—If the PCM was updated, troubleshooting is complete. If the PCM was substituted, replace the original PCM (see page 11-219). If any other Temporary DTCs or DTCs were indicated in step 37, go to the indicated DTC's troubleshooting.■

    NO—If the screen indicates FAILED, check for poor connections or loose terminals at the FTP sensor and the PCM. If the PCM was updated, substitute a known-good PCM (see page 11-8), then go to step 36. If the PCM was substituted, go to step 1. If the screen indicates NOT COMPLETED, let the engine idle until a result comes on.

DTC P0455: EVAP System Large Leak Detected

DTC P0456: EVAP System Very Small Leak Detected

NOTICE

The fuel system is designed to allow specified maximum vacuum and pressure conditions. Do not deviate from the vacuum and pressure tests as indicated in these procedures. Excessive pressure/vacuum would damage the EVAP components or cause eventual fuel tank failure.

Special Tools Required

Vacuum pump/gauge, 0—30 in.Hg, Snap-on YA4000A or equivalent, commercially available

NOTE:

- Before you troubleshoot, record all freeze data and any on-board snapshot, and review the general troubleshooting information (see page 11-3).
- Fresh fuel has a higher volatility that will create greater pressure/vacuum. The optimum condition for testing is less than a full tank of fresh fuel. If possible, to assist in leak detection, add 1 gallon of fresh fuel to the tank (as long as it will not fill the tank), just before starting these procedures.

1. Check the fuel fill cap (the cap must say "Tighten to click"). It should turn 1/4 turn after it's tight, then it clicks.

   Is the correct fuel fill cap installed and properly tightened?

   YES—Go to step 2.

   NO—Replace or tighten the cap, then go to step 22.

2. Check the fuel fill cap seal (A) and the fuel fill pipe mating surface (B). Verify that the fuel fill cap tether cord (C) is not caught under the cap.

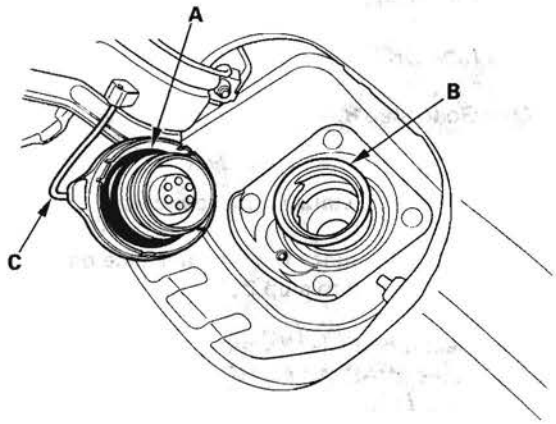

   Is the fuel fill cap seal missing or damaged, is the fuel fill pipe damaged, or is the tether cord caught under the cap?

   YES—Replace the fuel fill cap or the fuel fill pipe, then go to step 22.

   NO—Go to step 3.

3. Turn the ignition switch ON (II).

4. Clear the DTC with the HDS.

5. Do the EVAP FUNCTION TEST in the INSPECTION MENU with the HDS.

   Is the result OK?

   YES—Intermittent failure, the system is OK at this time. Check for poor connections or loose terminals at the FTP sensor, the EVAP canister purge valve, or the EVAP canister vent shut valve, and the PCM. ■

   NO—Go to step 6.

(cont'd)

DTC Troubleshooting (cont'd)

6. Turn the ignition switch OFF.
7. Check for a poor connection or damage at the fuel tank vapor recirculation tube.

   Is the tube OK?

   YES—Go to step 8.

   NO—
   - Replace the fuel tank vapor recirculation tube, then go to step 22.
   - If necessary, replace the fuel tank (see page 11-333), then go to step 22.

8. Disconnect the fuel tank vapor recirculation tube (A) from the EVAP canister (B), and plug the EVAP canister port (C).

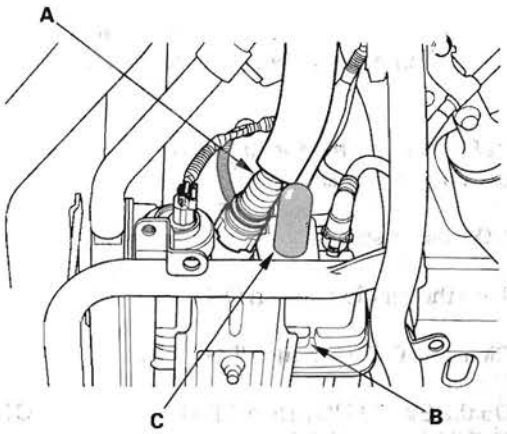

9. Disconnect the vacuum hose (purge line) (A) from the EVAP canister purge valve (B) in the engine compartment, and connect a vacuum pump/gauge, 0—30 in.Hg, to the vacuum hose as shown.

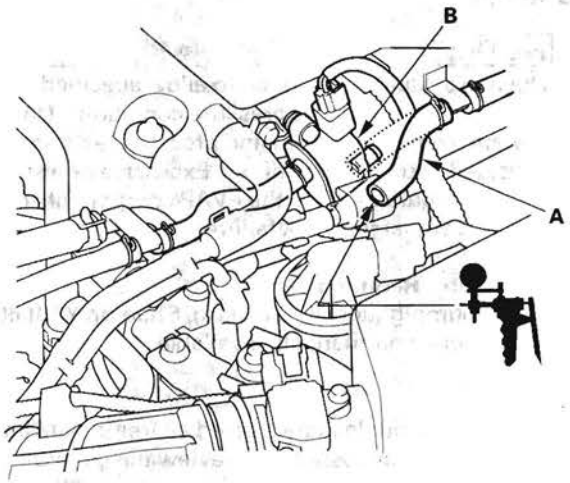

10. Turn the ignition switch ON (II).
11. Select EVAP CVS ON in the INSPECTION MENU with the HDS.
12. Apply vacuum to the hose until the FTP reads 1.90 V (—0.59 in.Hg, —15.1 mmHg).

    NOTE: Be careful not to exceed the pressure. If you exceed the pressure, the FTP sensor can be damaged.

13. Monitor the FTP SENSOR in the DATA LIST for 1 minute with the HDS.

    Does the voltage increase more than 0.2 V (0.1 in.Hg, 2.5 mmHg)?

    YES—Go to step 14.

    NO—Go to step 19.

14. Select EVAP CVS OFF in the INSPECTION MENU with the HDS.

15. Disconnect the fresh air hose (A) from the EVAP canister (B), and plug the EVAP canister port (C).

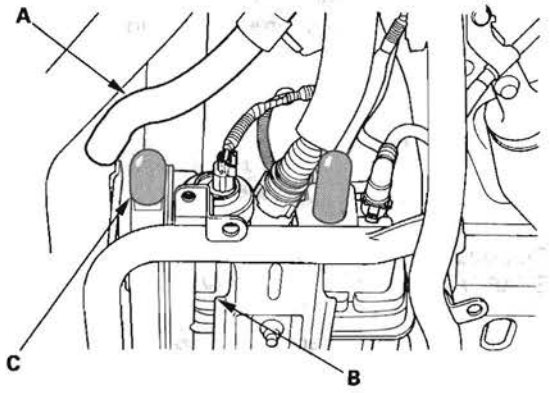

16. Apply vacuum to the EVAP system until the FTP reads 1.90 V (−0.59 in.Hg, −15.1 mmHg).

    NOTE: Be careful not to exceed the pressure. If you exceed the pressure, the FTP sensor can be damaged.

17. Monitor the FTP SENSOR in the DATA LIST for 1 minute with the HDS.

    Does the voltage increase more than 0.2 V (0.1 in.Hg, 2.5 mmHg)?

    YES—Go to step 18.

    NO—Replace the EVAP canister vent shut valve (see page 11-397), then go to step 21.

18. Check for a loose or damaged EVAP canister purge line between the EVAP canister and the EVAP canister purge valve.

    Is the line OK?

    YES—Replace these parts, then go to step 21:

    - FTP sensor O-ring
    - EVAP canister vent shut valve case and O-ring
    - EVAP canister

    NO—Reconnect or repair the EVAP canister purge hose, then go to step 21.

19. Select EVAP CVS OFF in the INSPECTION MENU with the HDS.

20. Check these parts for looseness or damage:

    - Fuel fill pipe
    - Fuel vapor return pipe

    Are the parts OK?

    YES—Check the fuel tank unit base gasket (see page 11-329), and check the fuel tank, then go to step 21.

    NO—Repair or replace the damaged parts, then go to step 21.

21. Reconnect all hoses and connectors.

22. Turn the ignition switch ON (II).

23. Reset the PCM with the HDS.

24. Do the PCM idle learn procedure (see page 11-304).

25. Do the EVAP FUNCTION TEST in the INSPECTION MENU with the HDS.

    Is the result OK?

    YES—Troubleshooting is complete.■

    NO—Check for poor connections or loose terminals at the FTP sensor, the EVAP canister purge valve, the EVAP canister vent shut valve, and the PCM, then go to step 1.

DTC Troubleshooting (cont'd)

DTC P0457: EVAP System Leak Detected/Fuel Fill Cap Loose or Missing

NOTE: Before you troubleshoot, record all freeze data and any on-board snapshot, and review the general troubleshooting information (see page 11-3).

1. Check the fuel fill cap (the cap must say "Tighten to click"). It should turn 1/4 turn after it's tight, then it clicks.

   Is the correct fuel fill cap installed and properly tightened?

   YES—Go to step 2.

   NO—Replace or tighten the cap, then go to step 19.

2. Check the fuel fill cap seal (A) and the fuel fill pipe mating surface (B). Verify that the fuel fill cap tether cord (C) is not caught under the cap.

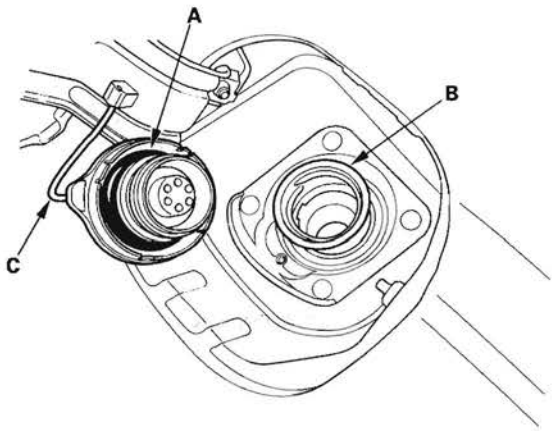

   Is the fuel fill cap seal missing or damaged, is the fuel fill pipe damaged, or is the tether cord caught under the cap?

   YES—Replace the fuel fill cap or the fuel fill pipe, then go to step 19.

   NO—Go to step 3.

3. Turn the ignition switch ON (II).

4. Clear the DTC with the HDS.

5. Do the EVAP FUNCTION TEST in the INSPECTION MENU with the HDS.

   Is the result OK?

   YES—Intermittent failure, the system is OK at this time. Check for poor connections or loose terminals at the FTP sensor, or the EVAP canister vent shut valve, and the PCM. ■

   NO—Go to step 6.

6. Turn the ignition switch OFF.

7. Remove the EVAP canister vent shut valve from the EVAP canister (see page 11-397).

8. Connect the 2P connector to the EVAP canister vent shut valve.

9. Turn the ignition switch ON (II).

10. Select EVAP CVS ON in the INSPECTION MENU with the HDS.

11. Check the EVAP canister vent shut valve (A) operation.

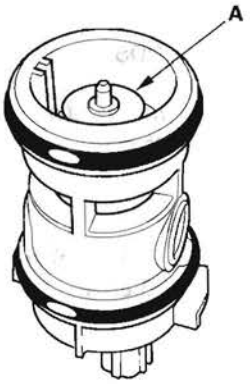

    Does the valve operate?

    YES—Check the routing of the EVAP canister vent tube, then go to step 18.

    NO—Go to step 12.

12. Turn the ignition switch OFF.

13. Replace the EVAP canister vent shut valve (see page 11-397).

14. Turn the ignition switch ON (II).

15. Reset the PCM with the HDS.

16. Do the PCM idle learn procedure (see page 11-304).

17. Do the EVAP FUNCTION TEST in the INSPECTION MENU with the HDS.

    Is the result OK?

    YES—Troubleshooting is complete.■

    NO—Check for poor connections or loose terminals at the FTP sensor, the EVAP canister vent shut valve, and the PCM, and check all EVAP line connections, then go to step 1.

18. Reinstall the EVAP canister vent shut valve.

19. Turn the ignition switch ON (II).

20. Reset the PCM with the HDS.

21. Do the PCM idle learn procedure (see page 11-304).

22. Do the EVAP FUNCTION TEST in the INSPECTION MENU with the HDS.

    Is the result OK?

    YES—Troubleshooting is complete.■

    NO—Check for poor connections or loose terminals at the FTP sensor, the EVAP canister vent shut valve, and the PCM, and check all EVAP line connections, then go to step 1.

DTC Troubleshooting (cont'd)

DTC P0496: EVAP System High Purge Flow

NOTE: Before you troubleshoot, record all freeze data and any on-board snapshot, and review the general troubleshooting information (see page 11-3).

1. Turn the ignition switch ON (II).
2. Clear the DTC with the HDS.
3. Do the EVAP FUNCTION TEST in the INSPECTION MENU with the HDS.

   Is the result OK?

   YES—Intermittent failure, the system is OK at this time. Check for poor connections or loose terminals at the FTP sensor, the EVAP canister purge valve, the EVAP canister vent shut valve, and the PCM. ■

   NO—Go to step 4.
4. Turn the ignition switch OFF.
5. Replace the EVAP canister purge valve (see page 11-397).
6. Turn the ignition switch ON (II).
7. Reset the PCM with the HDS.
8. Do the PCM idle learn procedure (see page 11-304).
9. Do the EVAP FUNCTION TEST in the INSPECTION MENU with the HDS.

   Is the result OK?

   YES—Troubleshooting is complete. ■

   NO—Check for poor connections or loose terminals at the FTP sensor, the EVAP canister purge valve, the EVAP canister vent shut valve, and the PCM, then go to step 1.

DTC P0497: EVAP System Low Purge Flow

Special Tools Required
- Vacuum/pressure gauge, 0—4 in.Hg, 07JAZ-001000B
- Vacuum pump/gauge, 0—30 in.Hg, Snap-on YA4000A or equivalent, commercially available

NOTE: Before you troubleshoot, record all freeze data and any on-board snapshot, and review the general troubleshooting information (see page 11-3).

1. Check the fuel fill cap installation (The cap label must say "Tighten to click.". The cap should tighten 1/4 turn after it is tight.).

   Is the fuel fill cap installed and properly tightened?

   YES—Go to step 2.

   NO—Properly install the fuel fill cap, then go to step 23.

2. Turn the ignition switch ON (II).

3. Clear the DTC with the HDS.

4. Do the EVAP FUNCTION TEST in the INSPECTION MENU with the HDS.

   Is the result OK?

   YES—Intermittent failure, the system is OK at this time. Check for poor connections or loose terminals at the FTP sensor, the EVAP canister purge valve, or the EVAP canister vent shut valve, and the PCM. ■

   NO—Go to step 5.

5. Check for a loose or damaged EVAP canister purge line between the intake manifold and the EVAP canister purge valve.

   Is the line OK?

   YES—Go to step 6.

   NO—Reconnect or repair the EVAP canister purge line, then go to step 23.

6. Disconnect the vacuum hose (A) from the EVAP canister purge valve (B) in the engine compartment, and connect a T-fitting (C) from the vacuum gauge and the vacuum pump/gauge, 0—30 in.Hg, to the vacuum hose as shown.

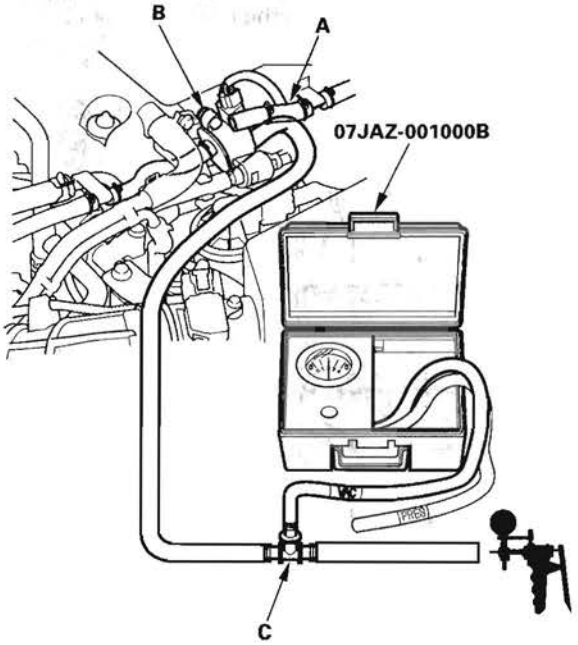

7. Select EVAP PCS ON in the INSPECTION MENU with the HDS.

8. Slowly apply about 0.6 in.Hg (15 mmHg) of vacuum to the hose.

   Does it hold vacuum?

   YES—Replace the EVAP canister purge valve, then go to step 22.

   NO—Go to step 9.

(cont'd)

DTC Troubleshooting (cont'd)

9. Reconnect the vacuum hose to the EVAP canister purge valve.
10. Disconnect the vacuum hose from the purge line (at the EVAP canister side), and connect a T-fitting (A) from the vacuum gauge and the vacuum pump/ gauge, 0—30 in.Hg, to the hose as shown.

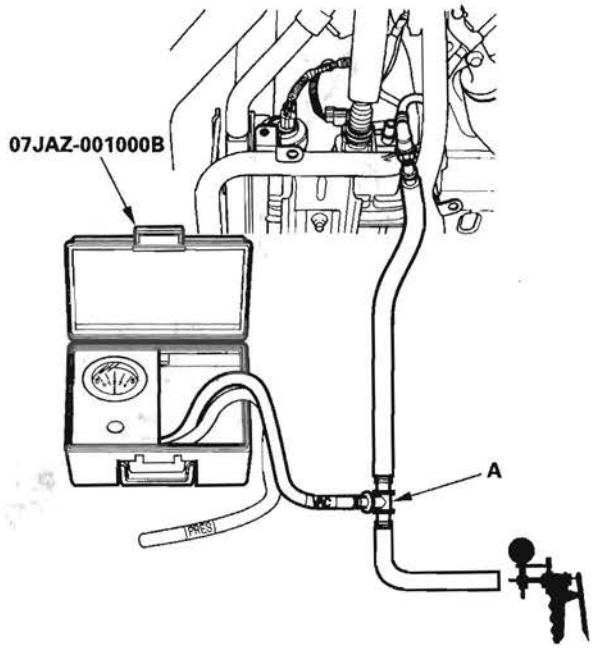

11. Select EVAP PCS ON in the INSPECTION MENU with the HDS.
12. Slowly apply about 2 kPa (0.6 in.Hg, 15 mmHg) of vacuum to the hose.

    Does it hold vacuum?

    YES—Check for a restrictied EVAP canister purge line between the EVAP canister purge valve and the EVAP canister, then go to step 22.

    NO—Go to step 13.

13. Remove the FTP sensor with its connector connected (see page 11-396).
14. Connect a T-fitting (A) from the vacuum pump/ gauge, 0—30 in.Hg, and the vacuum pump to the FTP sensor (B) as shown.

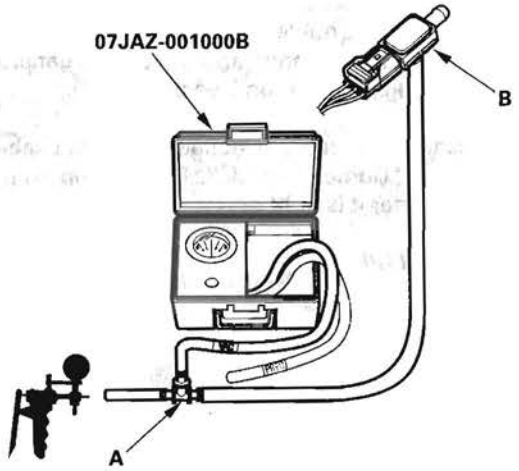

15. Check and record the FTP SENSOR reading in the DATA LIST with the HDS.
16. Slowly apply about 1.3 kPa (0.4 in.Hg, 10 mmHg) of vacuum to the hose.

17. Check the FTP SENSOR in the DATA LIST with the HDS.

    Is the difference more than 1.1 kPa (0.31 in.Hg, 8 mmHg) before and after applying vacuum?

    YES—Go to step 18.

    NO—Replace the FTP sensor (see page 11-396), then go to step 22.

18. Reconnect the vacuum hoses to the EVAP canister purge line (EVAP canister side), and reinstall the FTP sensor.

19. Disconnect the vacuum hose (purge line) (A) from the EVAP canister purge valve (B), and connect a T-fitting (C) from the vacuum gauge and the vacuum pump/gauge, 0—30 in.Hg, to the hose as shown.

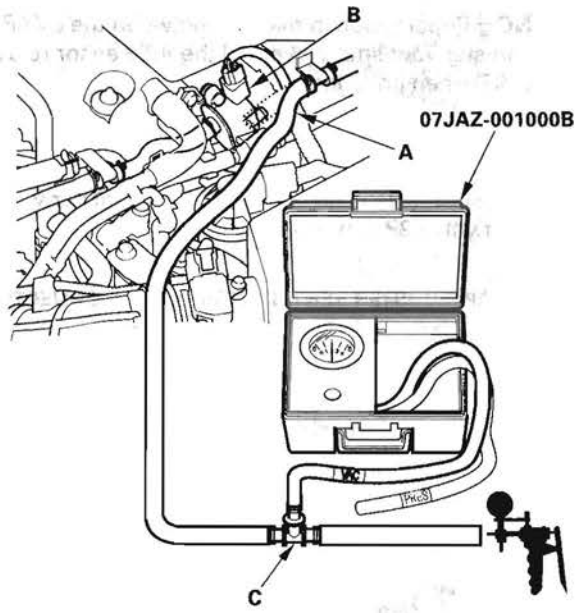

20. Select EVAP CVS ON in the INSPECTION MENU with the HDS.

21. Slowly apply about 2 kPa (0.6 in.Hg, 15 mmHg) of vacuum to the hose.

    Does the hose hold vacuum?

    YES—Check for blockage at the EVAP canister port, then go to step 22.

    NO—Replace the EVAP canister vent shut valve (see page 11-397), then go to step 22.

22. Reconnect all hoses.

23. Turn the ignition switch ON (II).

24. Reset the PCM with the HDS.

25. Do the PCM idle learn procedure (see page 11-304).

26. Do the EVAP FUNCTION TEST in the INSPECTION MENU with the HDS.

    Is the result OK?

    YES—Troubleshooting is complete. ■

    NO—Check for poor connections or loose terminals at the FTP sensor, the EVAP canister purge valve, the EVAP canister vent shut valve, and the PCM, then go to step 1.

DTC Troubleshooting (cont'd)

DTC P0498: EVAP Canister Vent Shut Valve Control Circuit Low Voltage

NOTE: Before you troubleshoot, record all freeze data and any on-board snapshot, and review the general troubleshooting information (see page 11-3).

1. Turn the ignition switch ON (II).
2. Clear the DTC with the HDS.
3. Check for Temporary DTCs or DTCs with the HDS.

   Is DTC P0498 indicated?

   YES—Go to step 6.

   NO—Go to step 4.
4. Select EVAP CVS ON in the INSPECTION MENU with the HDS.
5. Check for Temporary DTCs or DTCs with the HDS.

   Is DTC P0498 indicated?

   YES—Go to step 6.

   NO—Intermittent failure, the system is OK at this time. Check for poor connections or loose terminals at the EVAP canister vent shut valve and the PCM. ■
6. Turn the ignition switch OFF.
7. Disconnect the EVAP canister vent shut valve 2P connector.
8. Turn the ignition switch ON (II).
9. Measure voltage between EVAP canister vent shut valve 2P connector terminal No. 2 and body ground.

   EVAP CANISTER VENT SHUT VALVE 2P CONNECTOR

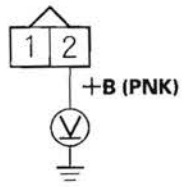

   Wire side of female terminals

   Is there battery voltage?

   YES—Go to step 10.

   NO—Repair open in the wire between the EVAP canister vent shut valve and the A/F sensor relay (LAF), then go to step 18.
10. Turn the ignition switch OFF.
11. Measure resistance between EVAP canister vent shut valve 2P connector terminals No. 1 and No. 2.

    EVAP CANISTER VENT SHUT VALVE 2P CONNECTOR

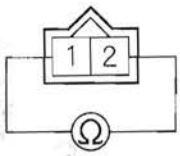

    Terminal side of male terminals

    Is there about 25—30 Ω at room temperature?

    YES—Go to step 12.

    NO—Go to step 17.

12. Jump the SCS line with the HDS.

13. Disconnect PCM connector A (44P).

14. Check for continuity between PCM connector terminal A10 and body ground.

PCM CONNECTOR A (44P)

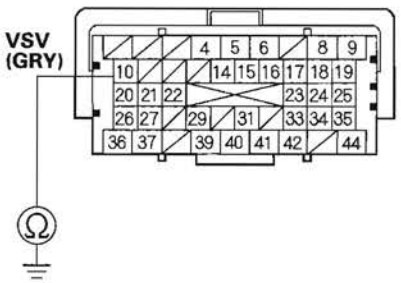

Terminal side of female terminals

Is there continuity?

YES—Repair short in the wire between the EVAP canister vent shut valve and the PCM (A10), then go to step 18.

NO—Go to step 15.

15. Connect EVAP canister vent shut valve 2P connector terminal No. 1 to body ground with a jumper wire.

EVAP CANISTER VENT SHUT VALVE 2P CONNECTOR

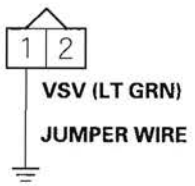

Wire side of female terminals

16. Check for continuity between PCM connector terminal A10 and body ground.

PCM CONNECTOR A (44P)

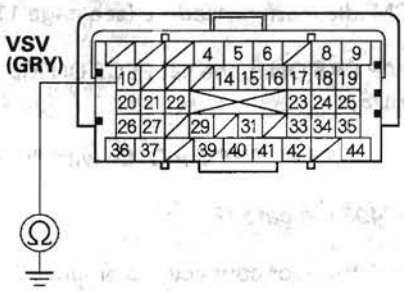

Terminal side of female terminals

Is there continuity?

YES—Go to step 24.

NO—Repair open in the wire between the EVAP canister vent shut valve and the PCM (A10), then go to step 18.

17. Replace the EVAP canister vent shut valve (see page 11-397).

18. Reconnect all connectors.

(cont'd)

DTC Troubleshooting (cont'd)

19. Turn the ignition switch ON (II).
20. Reset the PCM with the HDS.
21. Do the PCM idle learn procedure (see page 11-304).
22. Select EVAP CVS ON in the INSPECTION MENU with the HDS.
23. Check for Temporary DTCs or DTCs with the HDS.

    Is DTC P0498 indicated?

    YES—Check for poor connections or loose terminals at the EVAP canister vent shut valve and the PCM, then go to step 1.

    NO—Troubleshooting is complete. If any other Temporary DTCs or DTCs are indicated, go to the indicated DTC's troubleshooting. ■
24. Reconnect all connectors.
25. Update the PCM if it does not have the latest software (see page 11-7), or substitute a known-good PCM (see page 11-8).
26. Select EVAP CVS ON in the INSPECTION MENU with the HDS.
27. Check for Temporary DTCs or DTCs with the HDS.

    Is DTC P0498 indicated?

    YES—Check for poor connections or loose terminals at the EVAP canister vent shut valve and the PCM. If the PCM was updated, substitute a known-good PCM (see page 11-8), then go to step 26. If the PCM was substituted, go to step 1.

    NO—If the PCM was updated, troubleshooting is complete. If the PCM was substituted, replace the original PCM (see page 11-219). If any other Temporary DTCs or DTCs are indicated, go to the indicated DTC's troubleshooting. ■

DTC P0499: EVAP Canister Vent Shut Valve Control Circuit High Voltage

NOTE: Before you troubleshoot, record all freeze data and any on-board snapshot, and review the general troubleshooting information (see page 11-3).

1. Turn the ignition switch ON (II).
2. Clear the DTC with the HDS.
3. Select EVAP CVS ON in the INSPECTION MENU with the HDS.
4. Check for Temporary DTCs or DTCs with the HDS.

   Is DTC P0499 indicated?

   YES—Go to step 5.

   NO—Intermittent failure, the system is OK at this time. Check for poor connections or loose terminals at the EVAP canister vent shut valve and the PCM. ■
5. Update the PCM if it does not have the latest software (see page 11-7), or substitute a known-good PCM (see page 11-8).
6. Select EVAP CVS ON in the INSPECTION MENU with the HDS.
7. Check for Temporary DTCs or DTCs with the HDS.

   Is DTC P0499 indicated?

   YES—Check for poor connections or loose terminals at the EVAP canister vent shut valve and the PCM. If the PCM was updated, substitute a known-good PCM (see page 11-8), then go to step 6. If the PCM was substituted, go to step 1.

   NO—If the PCM was updated, troubleshooting is complete. If the PCM was substituted, replace the original PCM (see page 11-219). If any other Temporary DTCs or DTCs are indicated, go to the indicated DTC's troubleshooting. ■

DTC Troubleshooting (cont'd)

DTC P1454: FTP Sensor Range/Performance Problem

DTC P2422: EVAP Canister Vent Shut Valve Stuck Closed Malfunction

NOTE: Before you troubleshoot, record all freeze data and any on-board snapshot, and review the general troubleshooting information (see page 11-3).

1. Turn the ignition switch ON (II).
2. Clear the DTC with the HDS.
3. Turn the ignition switch OFF.
4. Remove the fuel fill cap, and wait for 1 minute.
5. Check the FTP SENSOR in the DATA LIST with the HDS.

   Is it between −0.67 and 0.67 kPa (−0.2 and 0.2 in.Hg, −5 and 5 mmHg), or 2.4 and 2.6 V?

   YES—Go to step 6.

   NO—Go to step 17.
6. Install the fuel fill cap.
7. Clear the DTC with the HDS.
8. Start the engine. Hold the engine speed at 3,000 rpm without load (in Park or neutral) until the radiator fan comes on, then let it idle.
9. Monitor the OBD STATUS for DTC P1454 in the DTCs MENU with the HDS.

   Does the screen indicate FAILED?

   YES—Go to step 10.

   NO—If the screen indicates PASSED, intermittent failure, the system is OK at this time. Check for poor connections or loose terminals at the FTP sensor, the EVAP canister vent shut valve, and the PCM. Also check for a blockage in the vent hoses and the drain joint. If the screen indicates NOT COMPLETED, go to step 8 and recheck.
10. Clear the DTC with the HDS.
11. Turn the ignition switch OFF.
12. Remove the EVAP canister vent shut valve from the EVAP canister (see page 11-397).
13. Connect the 2P connector to the EVAP canister vent shut valve.
14. Turn the ignition switch ON (II).
15. Select EVAP CVS ON in the INSPECTION MENU with the HDS.
16. Check the EVAP canister vent shut valve (A) operation.

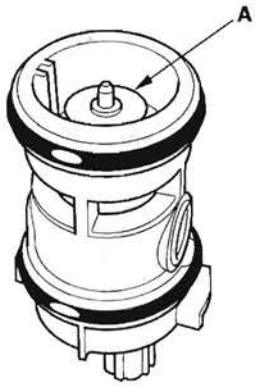

Does the valve operate?

YES—Check for a blockage in the EVAP canister, vent hoses, and drain joint, then install the EVAP canister vent shut valve, and go to step 23.

NO—Replace the EVAP canister vent shut valve (see page 11-397), then go to step 23.

17. Disconnect the air tube (A) from the FTP sensor (B).

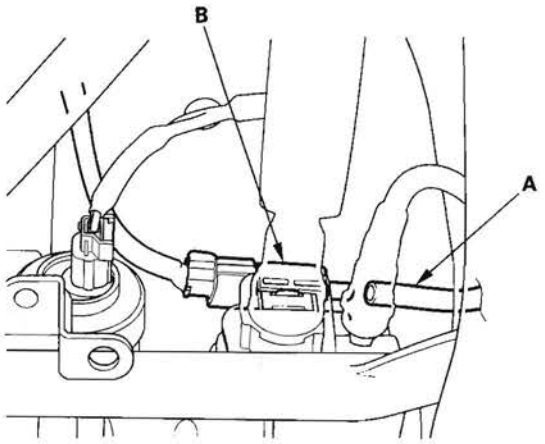

18. Check the FTP SENSOR in the DATA LIST with the HDS.

    Is it between −0.67 and 0.67 kPa (−0.2 and 0.2 in.Hg, −5 and 5 mmHg), or 2.4 and 2.6 V?

    YES—Check for a blockage in the FTP sensor air tube or vent, then go to step 23.

    NO—Go to step 19.

19. Turn the ignition switch OFF.

20. Remove the FTP sensor (A) from the EVAP canister with its connector connected (see page 11-396).

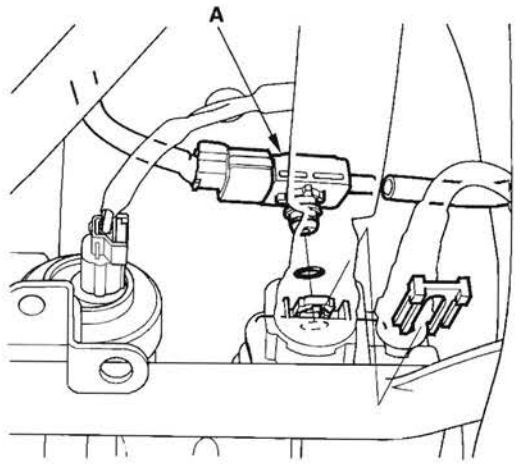

21. Turn the ignition switch ON (II).

22. Check the FTP SENSOR in the DATA LIST with the HDS.

    Is it between −0.67 kPa and 0.67 kPa (−0.2 and 0.2 in.Hg, −5 and 5 mmHg), or 2.4 and 2.6 V?

    YES—Check for debris or clogging at the EVAP canister and the FTP sensor port, then go to step 23.

    NO—Replace the FTP sensor (see page 11-396), then go to step 23.

23. Turn the ignition switch ON (II).

24. Reset the PCM with the HDS.

25. Do the PCM idle learn procedure (see page 11-304).

26. Start the engine. Hold the engine speed at 3,000 rpm without load (in Park or neutral) until the radiator fan comes on, then let it idle.

27. Check for Temporary DTCs or DTCs with the HDS.

    Is DTC P1454 and/or P2422 indicated?

    YES—Check for poor connections or loose terminals at the FTP sensor, the EVAP canister vent shut valve, and the PCM, then go to step 1.

    NO—Go to step 28.

28. Monitor the OBD STATUS for DTC P1454 in the DTCs MENU with the HDS.

    Does the screen indicate PASSED?

    YES—Troubleshooting is complete. If any other Temporary DTCs or DTCs were indicated in step 27, go to the indicated DTC's troubleshooting. ■

    NO—If the screen indicates FAILED, check for poor connections or loose terminals at the FTP sensor, the EVAP canister vent shut valve, and the PCM, then go to step 1. If the screen indicates NOT COMPLETED, go to step 26.

DTC Troubleshooting (cont'd)

DTC P145C: EVAP System Purge Flow (Vacuum Line)

NOTE:

- Before you troubleshoot, record all freeze data and any on-board snapshot, and review the general troubleshooting information (see page 11-3).
- This DTC is representative of an EVAP system purge flow problem. If DTC P145C is indicated alone, troubleshoot P0496 and P0497 using the freeze data for P145C.
- If any of the DTCs listed below are indicated at the same time as DTC P145C, troubleshoot those DTC first, then recheck for P145C:

  P0496, P0497: EVAP system purge flow

EVAP Canister Replacement

1. Lift the vehicle, and support it with jackstands.
2. Remove the cover (A).

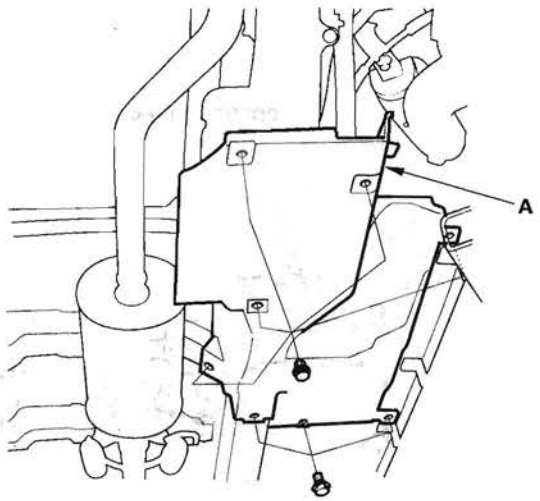

3. Remove the EVAP canister baffle cover (A).

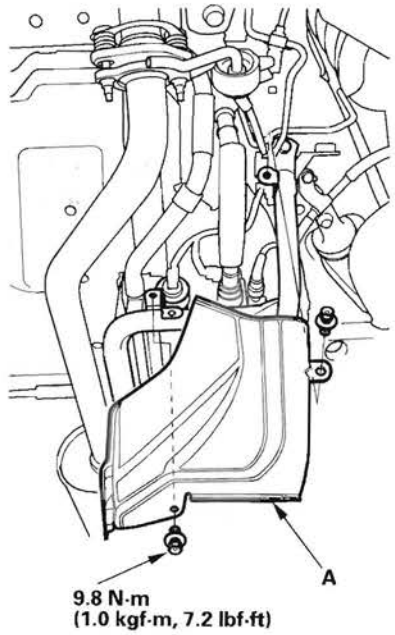

4. Disconnect the hoses (A) and the fuel subharness 6P connector (B).

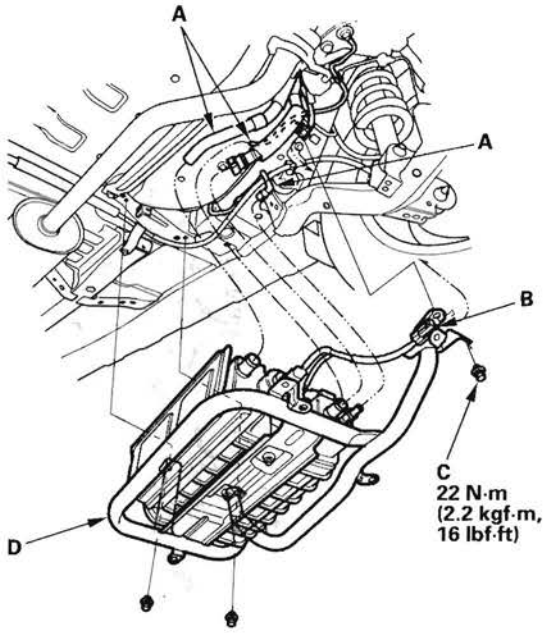

5. Remove the bolts (C) and the EVAP canister bracket (D).
6. Remove the EVAP canister (A) from the EVAP canister bracket (B).

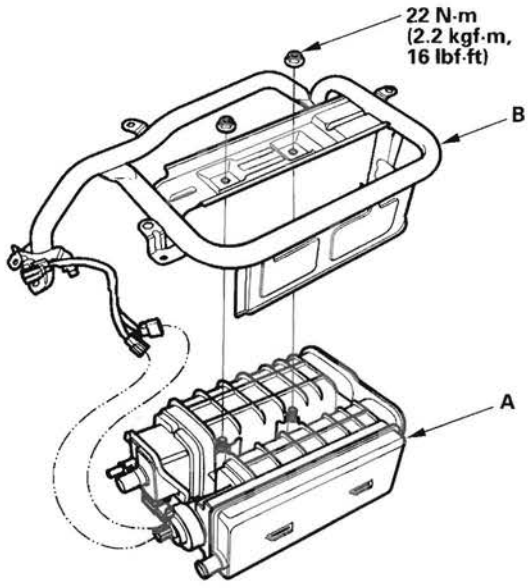

(cont'd)

EVAP Canister Replacement (cont'd)

7. Remove the cap (A).

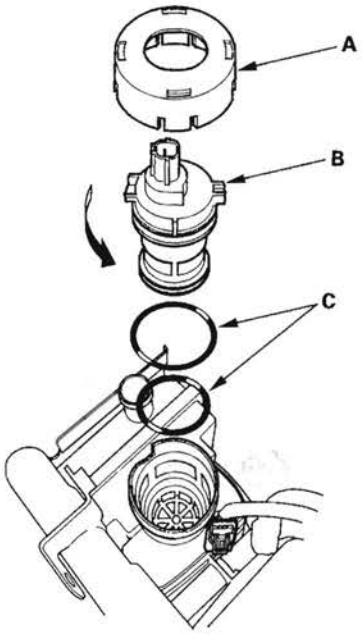

8. Remove the EVAP canister vent shut valve (B).
9. Install the EVAP canister vent shut valve in the new EVAP canister with new O-rings (C).

   NOTE: Do not coat the O-rings with oil.

10. Install the parts in the reverse order of removal.

FTP Sensor Replacement

1. Lift the vehicle, and support it with jackstands.
2. Remove the cover (see step 2 on page 11-395).
3. Remove the EVAP canister baffle cover (see step 3 on page 11-395).
4. Disconnect the FTP sensor connector (A).

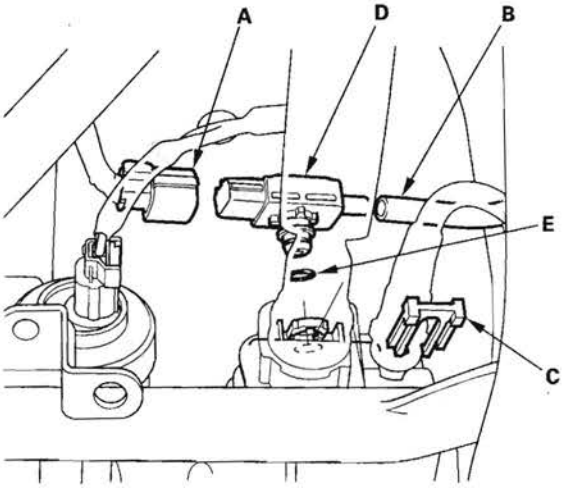

5. Disconnect the hose (B), remove the retainer (C) and remove the FTP sensor (D).
6. Install the parts in the reverse order of removal with a new O-ring (E) and a new retainer.

EVAP Canister Vent Shut Valve Replacement

1. Remove the EVAP canister (see page 11-395).
2. Remove the cap (A).

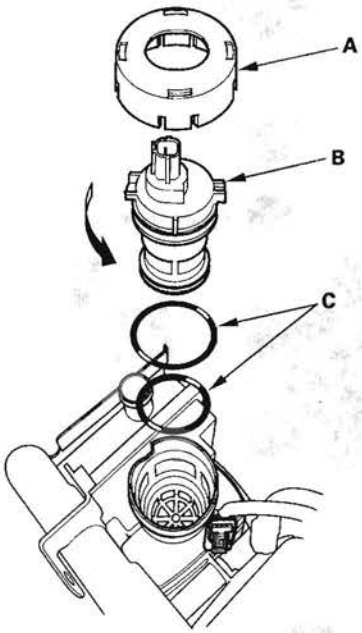

3. Remove the EVAP canister vent shut valve (B).
4. Install the parts in the reverse order of removal with new O-rings (C) and a new cap.

   NOTE: Do not coat the O-rings with oil.

EVAP Canister Purge Valve Replacement

1. Remove the intake manifold cover (see step 5 on page 9-3).
2. Remove the air cleaner (see page 11-340).
3. Relieve the fuel pressure (see page 11-317).
4. Remove the fuel line (A).

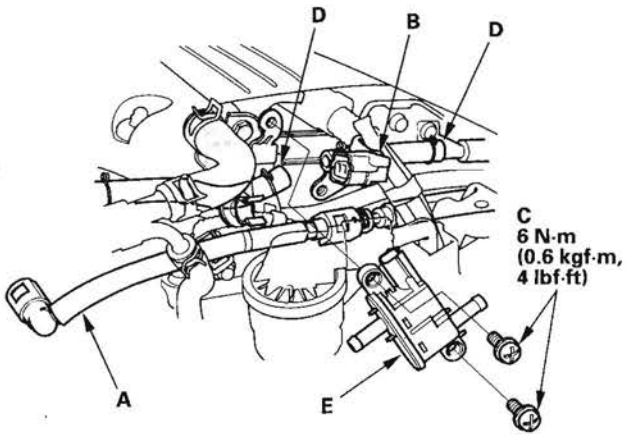

5. Disconnect the EVAP canister purge valve 2P connector (B).
6. Remove the screws (C) and the hoses (D), then remove the EVAP canister purge valve (E).
7. Install the parts in the reverse order of removal.

Transaxle

Automatic Transmission 14-1

Rear Differential 15-1

Driveline/Axle 16-1



SUPPLEMENTAL RESTRAINT SYSTEM (SRS) (If automatic transmission maintenance is required)

The CR-V SRS includes a driver's airbag in the steering wheel hub, a passenger's airbag in the dashboard above the glove box, seat belt tensioners in the front seat belt retractors, seat belt buckle tensioners in the front seat belt buckles, side curtain airbags in the sides of the roof, and side airbags in the front seat-backs. Information necessary to safely service the SRS is included in this Service Manual. Items marked with an asterisk (*) on the contents page include or are located near SRS components. Servicing, disassembling, or replacing these items require special precautions and tools, and should be done only by an authorized Honda dealer.

- To avoid rendering the SRS inoperative, which could lead to personal injury or death in the event of a severe frontal or side collision, all SRS service work should be done by an authorized Honda dealer.
- Improper service procedures, including incorrect removal and installation of the SRS, could lead to personal injury caused by unintentional deployment of the airbags and/or side airbags.
- Do not bump or impact the SRS unit, front impact sensors, or side impact sensors when the ignition switch is ON (II), or for at least 3 minutes after the ignition switch is turned OFF; otherwise, the system may fail in a collision, or the airbags may deploy.
- SRS electrical connectors are identified by yellow color coding. Related components are located in the steering column, front console, dashboard, dashboard lower panel, in the dashboard above the glove box, in the front seats, in the roof side, and around the floor. Do not use electrical test equipment on these circuits.



Automatic Transmission

Automatic Transmission

Special Tools 14-2
General Troubleshooting Information 14-4
DTC Troubleshooting Index 14-12
Symptom Troubleshooting Index 14-16
Component Location Index 14-28
System Description 14-29
DTC Troubleshooting 14-78
Road Test 14-211
Stall Speed Test 14-213
Pressure Test 14-214
Shift Solenoid Valve Test 14-218
Shift Solenoid Valve Replacement 14-222
Shift Solenoid Harness Replacement 14-222
A/T Clutch Pressure Control Solenoid Valve A
Test 14-225
Replacement 14-227
A/T Clutch Pressure Control Solenoid Valve B
Test 14-228
Replacement 14-232
A/T Clutch Pressure Control Solenoid Valve C
Test 14-230
Replacement 14-232
Input Shaft (Mainshaft) Speed Sensor Replacement 14-233
Output Shaft (Countershaft) Speed Sensor Replacement 14-233
2nd Clutch Transmission Fluid Pressure Switch Replacement 14-234
3rd Clutch Transmission Fluid Pressure Switch Replacement 14-234
ATF Temperature Sensor Test/Replacement 14-235
ATF Level Check 14-238
ATF Replacement 14-239
Transfer Assembly Inspection 14-241
Transfer Assembly Removal 14-242
Transfer Assembly Installation 14-244
Transmission Removal 14-246
Transmission Installation 14-256
Drive Plate Removal and Installation 14-267
ATF Cooler Cleaning 14-268
ATF Cooler Hose Replacement 14-270
ATF Filter Replacement 14-271
Shift Lever Removal 14-272
Shift Lever Installation 14-274
Shift Lever Disassembly/Reassembly 14-275
Shift Lever/Shift Cable Bracket Assembly Replacement 14-276
Shift Lever Knob Replacement 14-280
Shift Lever Knob Cover Replacement 14-281
Shift Lever Ring Replacement 14-282
Shift Cable Replacement 14-284
Shift Cable Adjustment 14-286

A/T Gear Position Indicator

Component Location Index 14-290
Circuit Diagram 14-291
Transmission Range Switch Test 14-292
Transmission Range Switch Replacement 14-294
A/T Gear Position Indicator Panel Light Harness Replacement 14-296
A/T Gear Position Indicator Panel Replacement 14-300
D3 Switch Circuit Troubleshooting 14-302
D3 Switch Test 14-304
D3 Switch Replacement 14-305

A/T Interlock System

Component Location Index 14-307
Circuit Diagram 14-308
Shift Lock System Circuit Troubleshooting 14-309
* Key Interlock System Circuit Troubleshooting 14-314
Shift Lock Solenoid Test 14-316
Shift Lock Solenoid Replacement 14-317
Shift Lock Stop, Shift Lock Stop Cushion Replacement 14-318
Shift Lock Release, Release Spring, Release Shaft Replacement 14-319
Park Pin Switch Test 14-320
Park Pin Switch Replacement 14-320

Transmission End Cover

End Cover Removal 14-324
Park Lever Stop Inspection and Adjustment 14-327
Idler Gear Shaft Bearing Replacement 14-327
Selector Control Shaft Oil Seal Replacement 14-328
Selector Control Shaft Bearing Replacement 14-328
ATF Feed Pipe Replacement 14-329
End Cover Installation 14-383

Transmission Housing

Housing and Shaft Assembly Removal 14-330
Bearing Removal 14-332
Bearing Installation 14-333
Reverse Idler Gear Removal and Installation 14-334
Shaft Assembly and Housing Installation 14-378

Valve Body

Valve Body and ATF Strainer Removal 14-335
Valve Body Repair 14-337
Valve Body Valve Installation 14-338
Main Valve Body Disassembly, Inspection, and Reassembly 14-339
ATF Pump Inspection 14-340
Regulator Valve Body Disassembly, Inspection, and Reassembly 14-341
Servo Body Disassembly, Inspection, and Reassembly 14-342
Shift Solenoid Valve Removal and Installation 14-343
Valve Body and ATF Strainer Installation 14-376

Torque Converter Housing

Mainshaft Bearing and Oil Seal Replacement 14-344
Countershaft Bearing Replacement 14-345
Secondary Shaft Bearing Replacement ... 14-346
Selector Control Shaft Oil Seal Replacement 14-347

Shafts and Clutches

Mainshaft Disassembly, Inspection, and Reassembly 14-348
Mainshaft 5th Gear Axial Clearance Inspection 14-349
Countershaft Disassembly, Inspection, and Reassembly 14-351
Countershaft Reverse Selector Hub and 3rd Gear Removal 14-352
Countershaft 3rd Gear and Reverse Selector Hub Installation 14-353
Secondary Shaft Disassembly, Inspection, and Reassembly 14-354
Secondary Shaft Ball Bearing, Idler Gear Removal and Installation 14-355
Secondary Shaft 2nd Gear Axial Clearance Inspection 14-356
Secondary Shaft 1st Gear Axial Clearance Inspection 14-358
Idler Gear Shaft Removal and Installation 14-360
Idler Gear/Idler Gear Shaft Replacement 14-361
1st, 2nd, and 3rd Clutch Disassembly 14-362
4th and 5th Clutch Disassembly 14-363
Clutch Inspection 14-366
Clutch Wave-plate Phase Difference Inspection 14-367
Clutch Clearance Inspection 14-368
1st, 2nd, and 3rd Clutch Reassembly 14-372
4th and 5th Clutch Reassembly 14-373

A/T Differential

Component Location Index 14-389
Backlash Inspection 14-390
Differential Carrier Replacement 14-391
Final Driven Gear Replacement 14-391
Transfer Drive Gear Replacement 14-391
Carrier Bearing Replacement 14-392
Oil Seal Replacement 14-393
Carrier Bearing Outer Race Replacement 14-394
Carrier Bearing Preload Inspection 14-396

Transfer Assembly

Inspection 14-399
Disassembly 14-401
Transfer Holder Disassembly 14-404
Transfer Holder Roller Bearing Replacement 14-405
Transfer Holder Tapered Roller Bearing Outer Race Removal/Installation 14-405
Transfer Drive Gear Bearing Replacement 14-406
Transfer Output Shaft Bearing Removal/Installation 14-406
Transfer Housing Tapered Roller Bearing Outer Race Replacement 14-407
Reassembly 14-409



Special Tools

Ref. No.	Tool Number	Description	Qty
①	07GAB-PF50101 or 07GAB-PF50100	Mainshaft Holder	1
②	07GAD-SD40101	Attachment, 78 x 90 mm	1
③	07GAE-PG40200 or 07GAE-PG4020A	Clutch Spring Compressor Bolt Assembly	1
④	07JAB-001020A	Holder Handle	1
⑤	07JAD-PH80101	Oil Seal Driver Attachment	1
⑥	07LAD-PW50601	Attachment, 40 x 50 mm	1
⑦	07LAE-PX40100	Clutch spring Compressor Attachment	2
⑧	07LAF-PZ70110	Bearing Installer Attachment	1
⑨	07MAF-SP0013A	Installer Shaft	1
⑩	07MAJ-PY4011A	A/T Pressure Hose, 2,210 mm	3
⑪	07MAJ-PY40120	A/T Pressure Hose Adapter	3
⑫	07NAD-PX40100	Attachment, 78 x 80 mm	1
⑬	07QAD-P0A0100	Attachment, 42 mm I.D.	1
⑭	07RAB-TB4010A or 07RAB-TB4010B	Companion Flange Holder	1
⑮	07ZAE-PRP0100	Clutch Compressor Attachment	1
⑯	070AF-PS50110	Tapered Bearing Outer Race Attachment	1
⑰	070AJ-0020101	Preload Inspection Tool	1
⑱	07406-0020400 or 07406-0020401	A/T Clutch Pressure Gauge Set/Panel	1
⑲	07736-A01000B or 07736-A01000A	Adjustable Bearing Puller, 25—40 mm	1

07HAE-PL50101 may also be used to substitute one of 07LAE-PX40100.

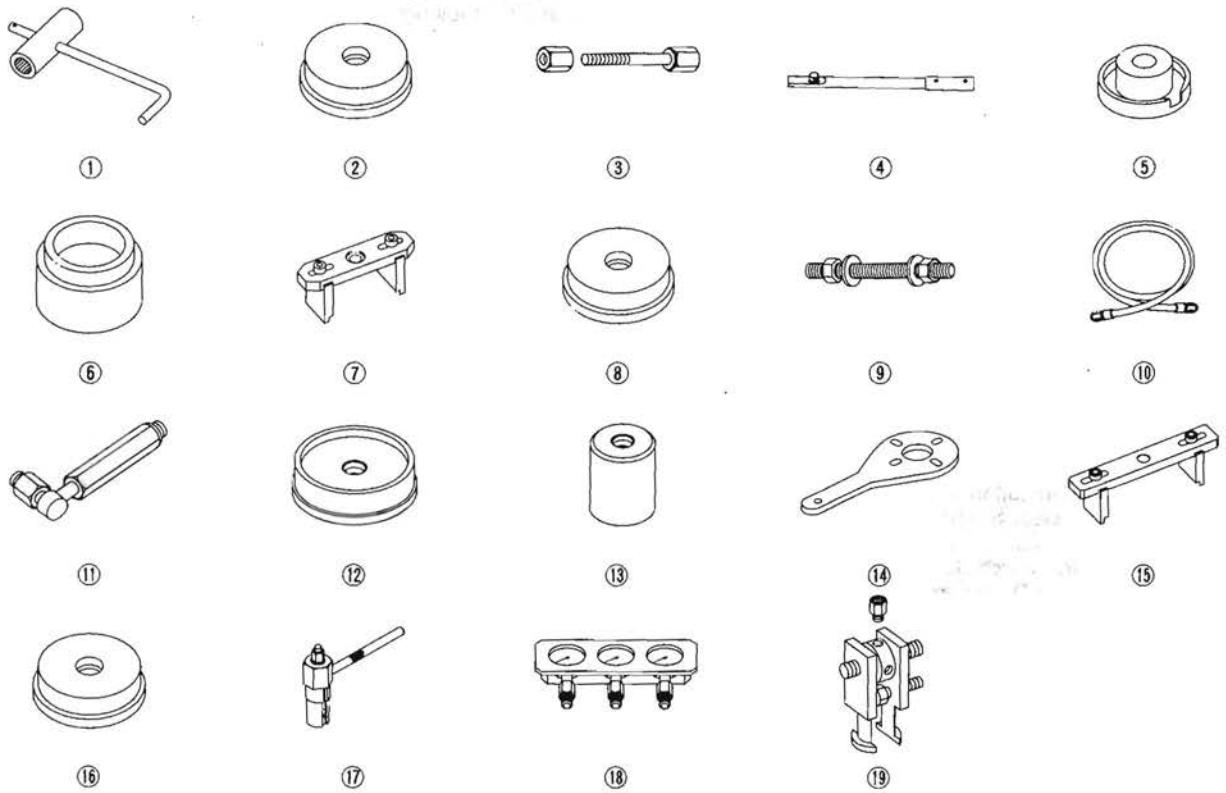

Ref. No.	Tool Number	Description	Qty
⑳	07746-0010100	Attachment, 32 x 35 mm	1
㉑	07746-0010300	Attachment, 42 x 47 mm	1
㉒	07746-0010400	Attachment, 52 x 55 mm	1
㉓	07746-0010500	Attachment, 62 x 68 mm	1
㉔	07746-0010600	Attachment, 72 x 75 mm	1
㉕	07746-0010800	Attachment, 22 x 24 mm	1
㉖	07746-0010900	Attachment, 40 x 42 mm	1
㉗	07746-0030100	Driver, 40 mm I.D.	1
㉘	07746-0030400	Attachment, 35 mm I.D.	1
㉙	07749-0010000	Driver	1
㉚	07947-SD90101	Oil Seal Driver Attachment	1
㉛	07947-ZV00100	Oil Seal Driver Attachment	1

07736-A01000B or 07736-A01000A must be used with commercially available 3/8 "-16 slide hammer.



⑳㉑㉒㉓㉔㉕㉖

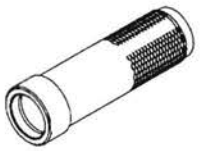

㉗



㉘

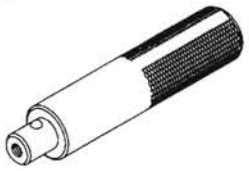

㉙

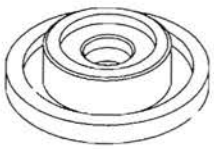

㉚



㉛

General Troubleshooting Information

How to Check for DTCs with the Honda Diagnostic System (HDS)

When the powertrain control module (PCM) senses an abnormality in the input or output system, the D indicator (A) in the gauge control module (tach) (B) will usually blink.

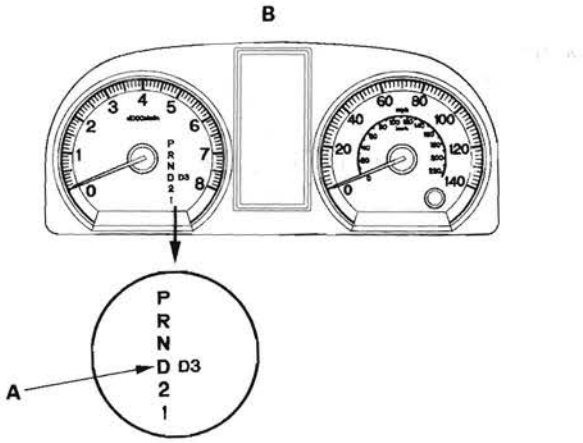

When the Honda Diagnostic System (HDS) is connected to the data link connector (DLC) (A) (located behind the driver's dashboard lower cover) and the SCS mode is selected, it will indicate the diagnostic trouble code (DTC) when the ignition switch is turned ON (II) and the appropriate menu is selected.

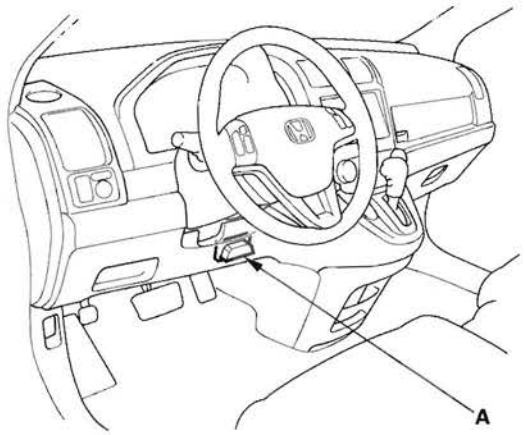

If the D indicator or malfunction indicator lamp (MIL) has been reported on, or if a driveability problem is suspected, do this:

1. Connect the HDS to the DLC. (See the HDS user's manual for specific instructions.)
2. Turn the ignition switch ON (II), select A/T system, and observe the DTC in the DTCs MENU on the HDS screen.

   NOTE: If the HDS does not communicate with the PCM, troubleshoot the DLC circuit (see page 11-197).
3. Record all fuel and emissions DTCs, and A/T DTCs, and freeze data.
4. If there is a fuel and emissions DTC, first check the fuel and emissions system as indicated by the DTC (except for DTC P0700, which means there is one or more A/T DTCs, and no problems were detected in the fuel and emissions circuit of the PCM).
5. Clear the DTC and data.
6. Drive the vehicle for several minutes under the same conditions as those indicated by the freeze data, and then recheck for a DTC. If the A/T DTC returns, go to the indicated DTC's troubleshooting. If the DTC does not return, there was an intermittent problem within the circuit. Make sure all pins and terminals in the circuit are tight.

Symptom Troubleshooting Versus DTC Troubleshooting

Some symptoms will not trigger diagnostic trouble codes (DTCs) or cause the D indicator to blink. If the malfunction indicator lamp (MIL) was reported ON or the D indicator has been blinking, check for DTCs. If the vehicle has an abnormal symptom, and there are no DTCs stored, do the symptom troubleshooting. Check the list of probable cause(s) for the symptom, in the sequence listed, until you find the problem.

How to Check for DTCs with the SCS Mode (retrieving the flash codes)

NOTE: The preferred method is to use the HDS to retrieve the P-code.

When the PCM senses an abnormality in the input or output system, the D indicator (A) in the gauge control module (tach) (B) will usually blink.

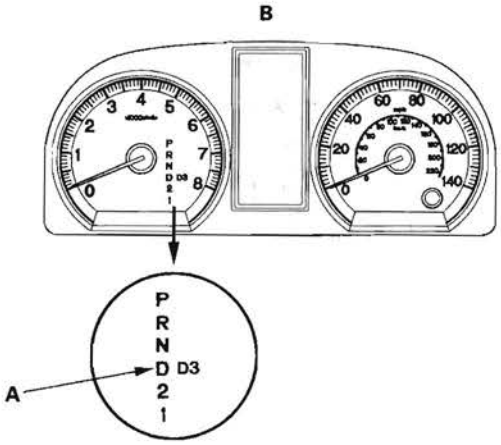

When the D indicator has been reported on, connect the HDS to the DLC (A) (located behind the driver's dashboard lower cover). Turn the ignition switch ON (II), select SCS mode, then the D indicator will indicate flash the DTC.

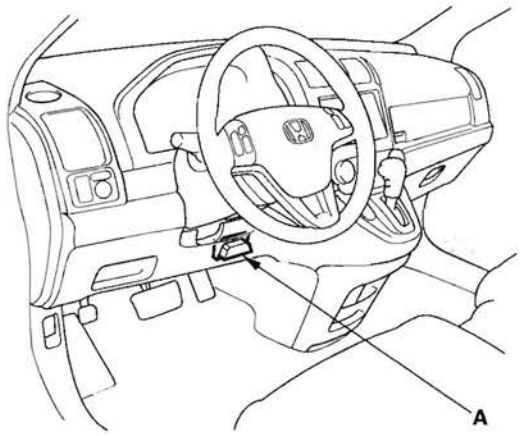

If the D indicator and the MIL come on at the same time, or if a driveability problem is suspected, do this:

1. Connect the HDS to the DLC. (See the HDS user's manual for specific instructions.)

2. Turn the ignition switch ON (II), select SCS mode, then observe the D indicator in the gauge control module. Codes 1 through 9 are indicated by individual short blinks. Code 10 and above are indicated by a series of long and short blinks. One long blink equals 10 short blinks. Add the long and short blinks together to determine the code.

   NOTE: If the HDS does not communicate with the PCM, troubleshoot the DLC circuit (see page 11-197).

Example: DTC 1-1

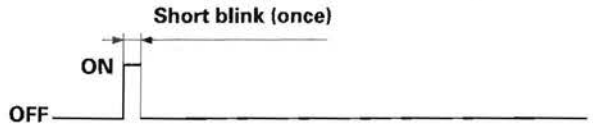

Example: DTC 15-5

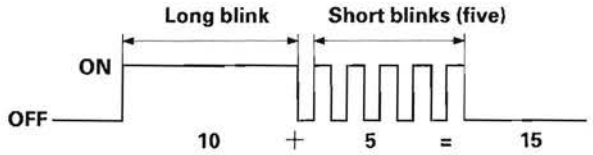

3. Record all fuel and emissions DTCs and A/T DTCs.

4. If there is a fuel and emissions DTC, first check the fuel and emissions system as indicated by the DTC (except DTC 70, which means there is one or more A/T DTCs, and no problems were detected in the fuel and emissions circuit of the PCM).

5. Clear the DTC and data.

6. Drive the vehicle for several minutes under the same conditions as those indicated by the freeze data, and then recheck for DTCs. If the A/T DTC returns, go to the indicated DTC's troubleshooting. If the DTC does not return, there was an intermittent problem within the circuit. Make sure all pins and terminals in the circuit are tight.

(cont'd)

General Troubleshooting Information (cont'd)

How to Troubleshoot Circuits at the PCM Connectors

NOTE: The PCM overwrites data and monitors the EVAP system for up to 15 minutes after the ignition switch is turned OFF. Jumping the SCS line after turning the ignition switch OFF cancels this function. Disconnecting the PCM during this function, without jumping the SCS line first, can damage the PCM.

1. Connect the HDS to the DLC (A).

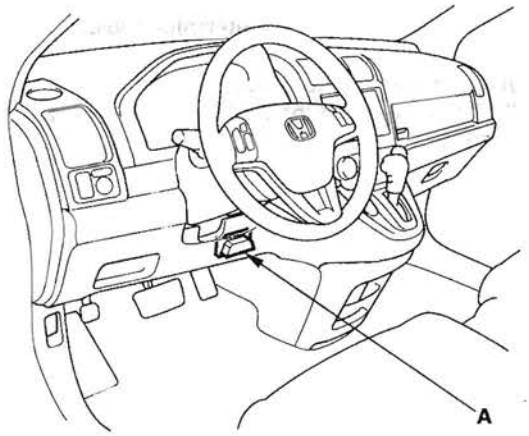

2. Jump the SCS line with the HDS.

   NOTE: If the HDS does not communicate with the PCM, troubleshoot the DLC circuit (see page 11-197).

3. Remove the harness clamp bracket (A) from the PCM cover.

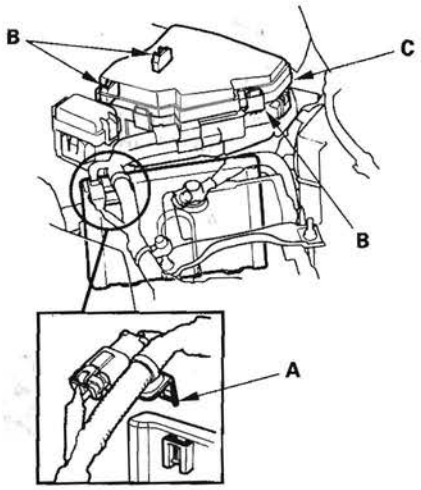

4. Release the three clips (B) securing the under-hood fuse/relay box (C), and lift up the box.

5. Disconnect PCM connectors (A), and probe the terminals in the inspection port on the terminal side of the connectors.

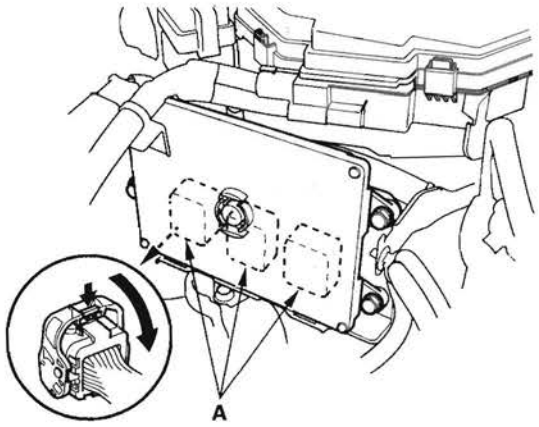

6. Check the connector inspection port (A) size, and select a suitable pin probe.

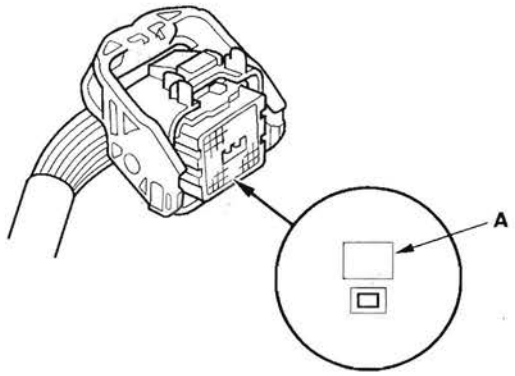

7. Connect one side of the patch cord (A) terminal to a digital multimeter (B), and connect the other side of the patch cord terminals to a commercially available banana jack (Pomona Electronics Tool No. 3563 or equivalent) (C).

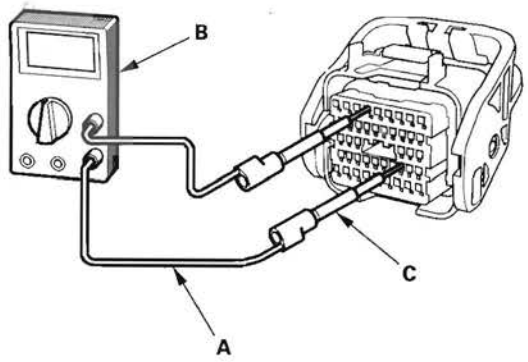

8. Gently slide the pin probe into the inspection port at the connector terminal side. Always use the inspection port. Do not slide the probe into the connector terminals.

NOTICE

- For accurate result, always use the pin probe (male).
- To prevent damage to the connector terminals, do not insert test equipment probes, paper clips, or other substitutes as they can damage the terminals. Damaged terminals cause a poor connection and an incorrect measurement.
- Do not puncture the insulation on a wire. Punctures can cause poor or intermittent electrical connections.

(cont'd)

General Troubleshooting Information (cont'd)

Clear A/T DTCs Procedure

1. Connect the HDS to the DLC (A).

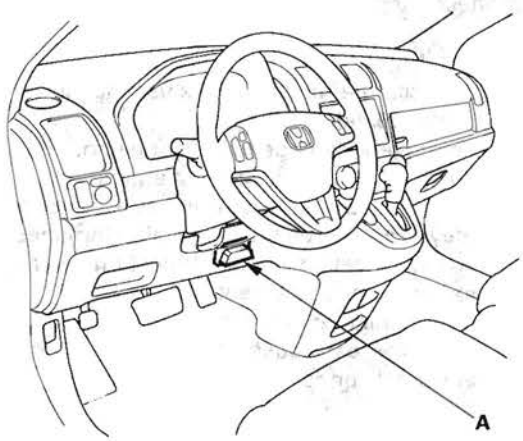

2. Turn the ignition switch ON (II).
3. Clear the DTC(s) on the HDS screen.

OBD Status

The OBD status shows the current system status of each DTC and all of the parameters. This function is used to see if the technician's repair was successfully finished. The results of diagnostic tests for the DTC are displayed as:

- PASSED: On-board diagnosis is successfully finished.
- FAILED: On-board diagnosis has finished but failed.
- NOT COMPLETED: The on-board diagnosis was running but is out of the enable conditions of the DTC.

How to End a Troubleshooting Session

This procedure must be done after any troubleshooting.

1. Reset the PCM with the HDS while the engine is stopped.
2. Turn the ignition switch OFF.
3. Turn the ignition switch ON (II), and wait for 30 seconds.
4. Turn the ignition switch OFF, and disconnect the HDS from the DLC.
5. Do the PCM idle learn procedure (see page 11-304).
6. Start the engine with the shift lever in the P or N position, and warm it up to normal operating temperature (the radiator fan comes on).
7. To verify that the problem is repaired, test-drive the vehicle for several minutes at speeds over 30 mph (50 km/h) or under the same conditions as those indicated by the freeze data.

PCM Updating and Substitution for Testing

Special Tools Required
- Honda diagnosis system (HDS) TDSGD2200
- Honda interface module (HIM) EQS05A35570
- HDS pocket tester TDSS3557011401

These special tools are available through the American Honda Tool and Equipment Program 1-888-424-6857.

Use this procedure when you have to substitute a known-good PCM in a troubleshooting procedure. Update the PCM only if the PCM does not already have the latest software loaded.

NOTE: Do not turn the ignition switch OFF while updating the PCM. If you turn the ignition switch OFF before completion, the PCM can be damaged.

How to Update the PCM

NOTE:
- Make sure you have the latest software on the HDS.
- To ensure the latest program is installed, do a PCM update whenever the PCM is substituted or replaced.
- You cannot update a PCM with the program it already has. It will only accept a new program.
- Before you update the PCM, make sure the battery is fully charged.
- To prevent PCM damage, do not operate anything electrical (audio system, brakes, A/C, power windows, moonroof (if equipped), or door locks) during the update.
- If you need to diagnose the Honda interface module (HIM) because the HIM's red (#3) light came on or was flashing during the update, leave the ignition switch in the ON (II) position when you disconnect the HIM from the data link connector (DLC). This will prevent PCM damage.
- High temperature in the engine compartment might cause the PCM to become too hot to run the update. If the engine has been running before this procedure, open the hood and cool the engine compartment.

1. Turn the ignition switch ON (II), but do not start the engine.
2. Connect the HDS to the DLC (A).

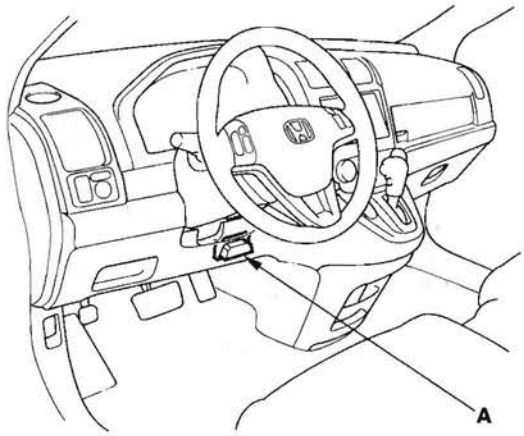

3. Make sure the HDS communicates with the PCM. if it does not, go to the DLC circuit troubleshooting (see page 11-197). If you did the DLC circuit troubleshooting, skip steps 4 and 5, then clean the throttle body (see page 11-338) after step 9.
4. Select the INSPECTION MENU with the HDS.
5. Select the TP POSITION CHECK in the ETCS TEST with the HDS.

   NOTE: If there is no result from TP POSITION CHECK, clean the throttle body (see page 11-338) after this procedure.
6. If the HDS does not have the update function, disconnect the HDS from the DLC, and connect the Honda interface module (HIM) to the DLC.
7. If the software in the PCM is the latest, disconnect the HDS or the HIM from the DLC, and go back to the procedure that you were doing. If the software in the PCM is not the latest, do the PCM update procedure as described on the HIM label or in the PCM update system.

   NOTE: If the PCM update system requires you to cool the PCM, follow what is shown on the screen.
8. Do the PCM idle learn procedure (see page 11-304).
9. Do the crank pattern clear/crank pattern learn (pulser F/B) procedure (see page 11-4).

(cont'd)

General Troubleshooting Information (cont'd)

How to Substitute the PCM

1. Make sure you have the anti-theft code for the audio or the navigation system (if equipped).
2. Connect the HDS to the DLC (A).

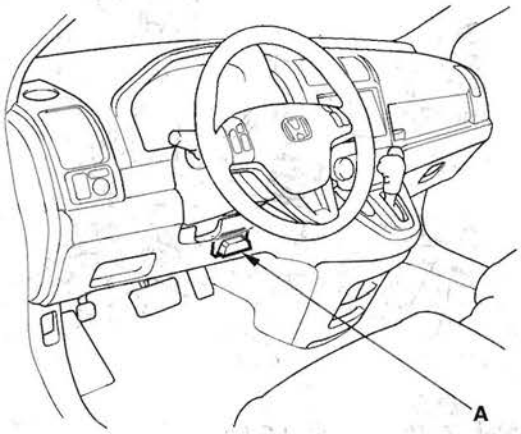

3. Turn the ignition switch ON (II).
4. Make sure the HDS communicates with the PCM. If it does not, go to the DLC circuit troubleshooting (see page 11-197). If you did the DLC circuit troubleshooting, skip steps 5 thru 9, then clean the throttle body (see page 11-338) after substituting the PCM.
5. Select the INSPECTION MENU with the HDS.
6. Select the TP POSITION CHECK in the ETCS TEST with the HDS.

   NOTE: If the result of TP POSITION CHECK was failed, clean the throttle body (see page 11-338) after this procedure.

7. Turn the ignition switch OFF.
8. Remove the battery.
9. Remove the harness clamp bracket (A) from the PCM cover (B).

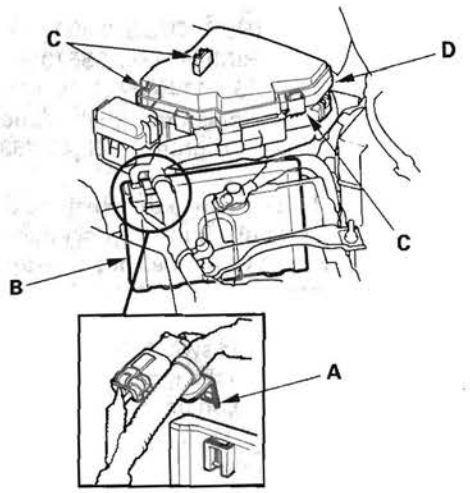

10. Release the three clips (C) securing the under-hood fuse/relay box (D), and lift up the box.
11. Remove the bolts (A), and remove the PCM (B).

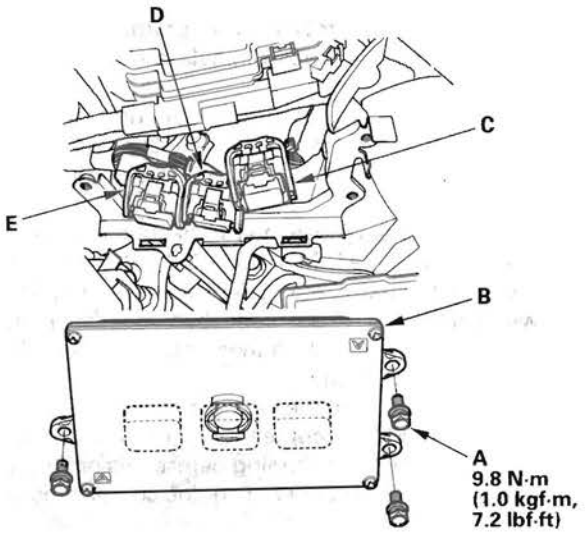

12. Disconnect the PCM connectors A (C), B (D), and C (E).

    NOTE: PCM connectors A, B, and C have symbols (A=□, B=△, C=○) embossed on them for identification.

13. Install the PCM and the battery in the reverse order of removal.

14. Turn the ignition switch ON (II).

    NOTE: DTC P0630 "VIN not Programmed or Mismatch" will be stored because VIN has not been programmed into the PCM. Ignore it, and continue this procedure.

15. Input the VIN to the PCM with the HDS.

16. Update the PCM if it does not have the latest software.

17. Select the IMMOBILIZER SYSTEM with the HDS.

18. Rewrite the immobilizer code with the PCM replacement procedure in the HDS; it allows you to start the engine.

19. Reset the PCM with the HDS.

20. Do the PCM idle learn procedure (see page 11-304).

21. Do the crank pattern learn procedure.

22. Enter the anti-theft code for the audio or the navigation system (if equipped), then enter the audio presets, and set the clock.

DTC Troubleshooting Index

NOTE: Before you troubleshoot, record all freeze data and any on-board snapshot, and review General Troubleshooting Information (see page 14-4).

DTC *(1)	D Indicator	MIL	Detection Item	Page
P0107 (12-7)	Blinks	OFF or ON *(3)	Manifold absolute pressure (MAP) sensor circuit low voltage input	(see page 14-78)
P0108 (12-8)	Blinks	OFF or ON *(3)	Manifold absolute pressure (MAP) sensor circuit high voltage input	(see page 14-79)
P0335 (88-2)	Blinks	OFF or ON *(3)	Crankshaft position (CKP) sensor no signal	(see page 14-80)
P0339 (88-6)	Blinks	OFF or ON *(3)	Crankshaft position (CKP) sensor Circuit intermittent interruption	(see page 14-81)
P0365 (89-2)	Blinks	OFF or ON *(3)	Camshaft position (CMP) sensor B no signal	(see page 14-82)
P0369 (89-6)	Blinks	OFF or ON *(3)	Camshaft position (CMP) sensor B intermittent interruption	(see page 14-83)
P062F (0-3)	Blinks	OFF or ON *(3)	Powertrain Control Module (PCM) Internal Control Module Keep Alive Memory (KAM) Error	(see page 14-84)
P0705 (5-2) *(2)	Blinks	ON	Transmission range switch (multiple shift-position input)	(see page 14-85)
P0706 (6-2) *(2)	Not blinks	ON	Transmission range switch (open)	(see page 14-91)
P0711 (28-5) *(2)	Blinks	OFF	ATF temperature sensor (range/performance)	(see page 14-95)
P0712 (28-3) *(2)	Blinks	OFF	ATF temperature sensor (short)	(see page 14-96)
P0713 (28-4) *(2)	Blinks	OFF	ATF temperature sensor (open)	(see page 14-98)
P0716 (15-5) *(2)	Blinks	ON	Input shaft (mainshaft) speed sensor (range/performance)	(see page 14-101)
P0717 (15-3) *(2)	Blinks	ON	Input shaft (mainshaft) speed sensor (no signal input)	(see page 14-101)
P0718 (15-6) *(2)	Blinks	ON	Input shaft (mainshaft) speed sensor (intermittent failure)	(see page 14-106)
P0721 (9-5) *(2)	Blinks	ON	Output shaft (countershaft) speed sensor (range/performance)	(see page 14-110)
P0722 (9-3) *(2)	Blinks	ON	Output shaft (countershaft) speed sensor (no signal input)	(see page 14-110)
P0723 (9-6) *(2)	Blinks	ON	Output shaft (countershaft) speed sensor (intermittent failure)	(see page 14-115)
P0731 (64-1)	Blinks	OFF	1st gear incorrect ratio	(see page 14-119)

NOTE:

* (1): The DTC in parentheses is the Honda code that you will see when you use the SCS mode. The first number(s) before the - (hyphen) is the flash code the D indicator indicates when the data link connector (DLC) is connected to the HDS, and in the SCS mode.
* (2): This code is caused by an electrical circuit problem and cannot be caused by a mechanical problem in the transmission.
* (3): The MIL comes on when the PGM-FI control system detects the same failure.

NOTE: Before you troubleshoot, record all freeze data and any on-board snapshot, and review General Troubleshooting Information (see page 14-4).

DTC *(1)	D Indicator	MIL	Detection Item	Page
P0732 (64-2)	Blinks	OFF	2nd gear incorrect ratio	(see page 14-120)
P0733 (64-3)	Blinks	OFF	3rd gear incorrect ratio	(see page 14-121)
P0734 (64-4)	Blinks	OFF	4th gear incorrect ratio	(see page 14-122)
P0735 (64-5)	Blinks	OFF	5th gear incorrect ratio	(see page 14-123)
P0741 (40-3)	Blinks	OFF	Torque converter clutch circuit performance or stuck OFF	(see page 14-124)
P0747 (76-4)	Blinks	ON	A/T clutch pressure control solenoid valve A stuck ON	(see page 14-125)
P0752 (70-4)	Blinks	ON	Shift solenoid valve A stuck ON	(see page 14-126)
P0756 (71-3)	Blinks	ON	Shift solenoid valve B stuck OFF	(see page 14-127)
P0757 (71-4)	Blinks	ON	Shift solenoid valve B stuck ON	(see page 14-128)
P0761 (72-3)	Blinks	ON	Shift solenoid valve C stuck OFF	(see page 14-129)
P0771 (74-3)	Blinks	ON	Shift solenoid valve E stuck OFF	(see page 14-130)
P0776 (77-3)	Blinks	ON	A/T clutch pressure control solenoid valve B stuck OFF	(see page 14-131)
P0777 (77-4)	Blinks	ON	A/T clutch pressure control solenoid valve B stuck ON	(see page 14-132)
P0780 (45-1)	Blinks	ON	Shift control system	(see page 14-133)
P0796 (78-3)	Blinks	ON	A/T clutch pressure control solenoid valve C stuck OFF	(see page 14-134)
P0797 (78-4)	Blinks	ON	A/T clutch pressure control solenoid valve C stuck ON	(see page 14-135)
P0842 (25-3)	Blinks	ON	2nd clutch transmission fluid pressure switch (short or stuck ON)	(see page 14-136)
P0843 (25-4)	Blinks	ON	2nd clutch transmission fluid pressure switch (open or stuck OFF)	(see page 14-138)
P0847 (26-3)	Blinks	OFF	3rd clutch transmission fluid pressure switch (short or stuck ON)	(see page 14-141)
P0848 (26-4)	Blinks	OFF	3rd clutch transmission fluid pressure switch (open or stuck OFF)	(see page 14-143)
P0962 (16-3) *(2)	Blinks	ON	A/T clutch pressure control solenoid valve A (open/short)	(see page 14-146)
P0963 (16-4) *(2)	Blinks	ON	A/T clutch pressure control solenoid valve A	(see page 14-149)

NOTE:

* (1): The DTC in parentheses is the Honda code that you will see when you use the SCS mode. The first number(s) before the - (hyphen) is the flash code the D indicator indicates when the data link connector (DLC) is connected to the HDS, and in the SCS mode.
* (2): This code is caused by an electrical circuit problem and cannot be caused by a mechanical problem in the transmission.

(cont'd)

DTC Troubleshooting Index (cont'd)

NOTE: Before you troubleshoot, record all freeze data and any on-board snapshot, and review General Troubleshooting Information (see page 14-4).

DTC *(1)	D Indicator	MIL	Detection Item	Page
P0966 (23-3) *(2)	Blinks	ON	A/T clutch pressure control solenoid valve B (open/short)	(see page 14-151)
P0967 (23-4) *(2)	Blinks	ON	A/T clutch pressure control solenoid valve B	(see page 14-154)
P0970 (29-3) *(2)	Blinks	ON	A/T clutch pressure control solenoid valve C (open/short)	(see page 14-156)
P0971 (29-4) *(2)	Blinks	ON	A/T clutch pressure control solenoid valve C	(see page 14-159)
P0973 (7-3) *(2)	Blinks	ON	Shift solenoid valve A (short)	(see page 14-161)
P0974 (7-4) *(2)	Blinks	ON	Shift solenoid valve A (open)	(see page 14-164)
P0976 (8-3) *(2)	Blinks	ON	Shift solenoid valve B (short)	(see page 14-167)
P0977 (8-4) *(2)	Blinks	ON	Shift solenoid valve B (open)	(see page 14-170)
P0979 (22-3) *(2)	Blinks	ON	Shift solenoid valve C (short)	(see page 14-173)
P0980 (22-4) *(2)	Blinks	ON	Shift solenoid valve C (open)	(see page 14-176)
P0982 (60-3)	Blinks	ON	Shift solenoid valve D (short)	(see page 14-179)
P0983 (60-4)	Blinks	ON	Shift solenoid valve D (open)	(see page 14-182)
P0985 (61-3)	Blinks	ON	Shift solenoid valve E (short)	(see page 14-185)
P0986 (61-4)	Blinks	ON	Shift solenoid valve E (open)	(see page 14-188)
P16C0 (99-1)	Not blinks	ON	PCM A/T control system incomplete update	(see page 14-191)
P1717 (62-1)	Blinks	OFF	Transmission range switch ATP RVS switch (open)	(see page 14-192)
P1730 (45-2)	Blinks	ON	Shift control system • Shift solenoid valve A or D stuck OFF • Shift solenoid valve B stuck ON • Shift valve A, B, or D stuck	(see page 14-195)
P1731 (45-3)	Blinks	ON	Shift control system • Shift solenoid valve E stuck ON • Shift valve E stuck • A/T clutch pressure control solenoid valve A stuck OFF	(see page 14-197)
P1732 (45-4)	Blinks	ON	Shift control system • Shift solenoid valve B or C stuck ON • Shift valve B or C stuck	(see page 14-199)

NOTE:

* (1): The DTC in parentheses is the Honda code that you will see when you use the SCS mode. The first number(s) before the - (hyphen) is the flash code the D indicator indicates when the data link connector (DLC) is connected to the HDS, and in the SCS mode.
* (2): This code is caused by an electrical circuit problem and cannot be caused by a mechanical problem in the transmission.

NOTE: Before you troubleshoot, record all freeze data and any on-board snapshot, and review General Troubleshooting Information (see page 14-4).

DTC *(1)	D Indicator	MIL	Detection Item	Page
P1733 (45-5)	Blinks	ON	Shift control system • Shift solenoid valve D stuck ON • Shift valve D stuck • A/T clutch pressure control solenoid valve C stuck OFF	(see page 14-201)
P1734 (45-6)	Blinks	ON	Shift control system • Shift solenoid valve B or C stuck OFF • Shift valve B or C stuck	(see page 14-203)
P2122 (20-3)	Blinks	ON	Accelerator pedal position (APP) sensor A (throttle position sensor D) circuit low voltage	(see page 14-205)
P2123 (20-4)	Blinks	ON	Accelerator pedal position (APP) sensor A (throttle position sensor D) circuit high voltage	(see page 14-206)
U0028 (107-1)	Blinks	OFF or ON *(2)	F-CAN malfunction (F-CAN bus OFF)	(see page 14-207)
U0122 (107-4)	Blinks	OFF	F-CAN malfunction (PCM-to-VSA modulator-control unit)	(see page 14-208)
U0155 (107-3)	Blinks	OFF or ON *(2)	F-CAN malfunction (PCM-to-gauge control module)	(see page 14-210)

NOTE:

* (1): The DTC in parentheses is the Honda code that you will see when you use the SCS mode. The first number(s) before the - (hyphen) is the flash code the D indicator indicates when the data link connector (DLC) is connected to the HDS, and in the SCS mode.
* (2): The MIL comes on when the PGM-FI control system detects the same failure.

Symptom Troubleshooting Index

Symptom	Probable cause(s)	Notes
When you turn the ignition switch ON (II), the D indicator comes on and stays on in all shift lever positions, or it never comes on at all	• F-CAN communication line error • Gauge control module defective • PCM defective	• Check the F-CAN communication line for a DTC (see page 22-237). • Check A/T gear position indicator drive circuit in the gauge control module by gauge control module self-diagnostic function (see page 22-230).
A/T gear position indicator does not come on while the shift lever is in that position	• F-CAN communication line error • Gauge control module defective • PCM defective • Transmission range switch defective	• Check the F-CAN communication line for a DTC (see page 22-237). • Check A/T gear position indicator drive circuit in the gauge control module by gauge control module self-diagnostic function (see page 22-230). • Inspect the transmission range switch (see page 14-292).
Transmission still shifts into 4th or 5th gear in D even though the D3 switch is pushed	• D3 switch defective • D3 switch circuit defective • Transmission range switch defective	• Check the D3 switch circuit (see page 14-302). • Check the D3 switch (see page 14-304). • Inspect the transmission range switch (see page 14-292).
When you turn the ignition switch ON (II), the D3 indicator comes on and stays on in all shift lever positions, or it never comes on at all	• F-CAN communication line error • Gauge control module defective • PCM defective • D3 switch defective • D3 switch circuit defective	• Check the F-CAN communication line for a DTC (see page 22-237). • Check A/T gear position indicator drive circuit in the gauge control module by gauge control module self-diagnostic function (see page 22-230). • Check the D3 switch circuit (see page 14-302). • Check the D3 switch (see page 14-304).
D3 indicator does not come on in D3 driving mode	• F-CAN communication line error • Gauge control module defective • PCM defective • D3 switch defective • D3 switch circuit defective	• Check the F-CAN communication line for a DTC (see page 22-237). • Check A/T gear position indicator drive circuit in the gauge control module by gauge control module self-diagnostic function (see page 22-230). • Check the D3 switch circuit (see page 14-302). • Check the D3 switch (see page 14-304).

Symptom	Probable cause(s)	Notes
Shift lever cannot be moved from P while you are pressing on the brake pedal	• Accelerator pedal position sensor circuit • Accelerator pedal position sensor defective • Brake switch circuit • Brake switch defective • Shift lock solenoid defective • Shift lock solenoid control circuit • Shift lock mechanism defective • Throttle body defective • Transmission range switch ATP P switch stuck OFF • Transmission range switch ATP P switch line opened	• Inspect the APP Sensor signal (see page 11-261). • Troubleshoot the shift lock system circuit (see page 14-309). • Test the shift lock solenoid (see page 14-316). • Inspect the transmission range switch (see page 14-292).
Ignition switch cannot be moved from ACC (I) to LOCK (0) (key is pushed in, shift lever in P)	• Interlock control system circuit • Key interlock solenoid stuck ON • Park pin switch stuck OFF • Transmission range switch	• Troubleshoot the key interlock system circuit (see page 14-314). • Inspect the transmission range switch (see page 14-292).
HDS does not communicate with the PCM or the vehicle	DLC circuit error	Troubleshoot the DLC circuit (see page 11-197).

(cont'd)

Symptom Troubleshooting Index (cont'd)

Symptom	Probable cause(s)	Notes
Engine runs, but vehicle does not move in any gear	1. Low ATF level 2. Shift cable broken or out of adjustment 3. Connection between the shift cable and transmission or body is worn 4. ATF pump worn or binding 5. Regulator valve stuck or spring worn 6. ATF strainer clogged 7. Mainshaft worn or damaged 8. Final gears worn or damaged 9. Transmission-to-engine assembly error 10. Axle disengaged	• Check the ATF level, and check the ATF cooler lines for leakage and loose connections. If necessary, clean the ATF cooler lines. • Check for a loose shift cable at the shift lever and the transmission control shaft. • Improper alignment of ATF pump and torque converter housing may cause ATF pump seizure. The symptoms are mostly an rpm-related ticking noise or a high pitched squeak. • Check the line pressure. • Be careful not to damage the torque converter housing when replacing the main ball bearing. You may also damage the ATF pump when you torque down the main valve body. This will result in ATF pump seizure if not detected. Use the proper tools. • Install the main seal flush with the torque converter housing. If you push it into the torque converter housing until it bottoms out, it will block the fluid return passage and result in damage. • Check the ATF strainer for debris. If the ATF strainer is clogged with particles of steel or aluminum, inspect the ATF pump. If the ATF pump is OK, find the damaged components that caused the debris. If no cause for contamination is found, replace the torque converter. • Inspect the differential pinion gears for wear. If the differential pinion gears are worn, replace the differential assembly, replace the ATF strainer, thoroughly clean the transmission, and clean the torque converter, cooler, and lines.
Vehicle moves in 2 and R, but not in D or 1	1. 1st accumulator defective 2. 1st gears worn or damaged 3. 1st clutch defective	• Check the 1st clutch pressure. • Inspect the clutch piston, clutch piston check valve, and O-rings. Check the spring retainer and retainer seal for wear and damage. Inspect the clutch end-plate-to-top disc clearance. If the clearance is out of tolerance, inspect the clutch discs and plates for wear and damage. If the discs are worn or damaged, replace them as a set. Inspect the clutch wave-plate height. If the height is out of tolerance, replace the wave-plate. If the discs and plates are OK, adjust the clearance with the clutch end plate. • Inspect the 1st clutch feed pipe. If the 1st clutch feed pipe is scored, replace the end cover. • Replace the secondary shaft if the bushing for the 1st clutch feed pipe is loose or damaged.

Symptom	Probable cause(s)	Notes
Vehicle moves in D, 1, and R, but not in 2	1. 2nd accumulator defective 2. 2nd gears worn or damaged 3. 2nd clutch defective	• Check the 2nd clutch pressure. • Inspect the clutch piston, clutch piston check valve, and O-rings. Check the spring retainer and retainer seal for wear and damage. Inspect the clutch end-plate-to-top disc clearance. If the clearance is out of tolerance, inspect the clutch discs and plates for wear and damage. If the discs are worn or damaged, replace them as a set. Inspect the clutch wave-plate height. If the height is out of tolerance, replace the wave-plate. If the discs and plates are OK, adjust the clearance with the clutch end plate.
Vehicle moves in D, 2, and 1, but not in R	1. Shift solenoid valve E defective 2. Shift fork shaft stuck 3. Shift valve E defective 4. 4th/reverse accumulator defective 5. 4th clutch defective 6. Reverse gears worn or damaged	• Check the D indicator, and check for loose connectors. • Inspect the shift solenoid valve E for seizure, and O-rings for wear and damage. • Check for a missing shift fork bolt on the shift fork shaft. • Check the 4th clutch pressure. • Inspect the clutch piston, clutch piston check valve, and O-rings. Check the spring retainer for wear and damage. Inspect the clutch end-plate-to-top disc clearance. If the clearance is out of tolerance, inspect the clutch discs and plates for wear and damage. If the discs are worn or damaged, replace them as a set. Inspect the clutch wave-plate height. If the height is out of tolerance, replace the wave-plate. If the discs and plates are OK, adjust the clearance with the clutch end plate. • Inspect the reverse selector gear teeth chamfers, and inspect the engagement teeth chamfers of the countershaft 4th gear and reverse gear. Replace the reverse gears and the reverse selector if they are worn or damaged. If the transmission makes a clicking, grinding, or whirring noise, also replace the mainshaft 4th gear, reverse idler gear, and countershaft 4th gear.
Poor acceleration; flares when starting off in D and R; stall speed high in 2 and 1, and in D in 1st and 2nd	1. Low ATF level 2. Shift cable broken or out of adjustment 3. ATF pump worn or binding 4. Regulator valve stuck or spring worn 5. ATF strainer clogged 6. Torque converter check valve defective	• Check the ATF level, and check the ATF cooler lines for leakage and loose connections. If necessary, clean the ATF cooler lines. • Check for a loose shift cable at the shift lever and the transmission control shaft. • Improper alignment of ATF pump and torque converter housing may cause ATF pump seizure. The symptoms are mostly an rpm-related ticking noise or a high pitched squeak. • Check the ATF strainer for debris. If the ATF strainer is clogged with particles of steel or aluminum, inspect the ATF pump. If the ATF pump is OK, find the damaged components that caused the debris. If no cause for contamination is found, replace the torque converter.

(cont'd)

Symptom Troubleshooting Index (cont'd)

Symptom	Probable cause(s)	Notes
Poor acceleration; flares when starting off in D and R; stall speed high when starting off in 2	2nd clutch defective	• Check the 2nd clutch pressure. • Inspect the clutch piston, clutch piston check valve, and O-rings. Check the spring retainer and retainer seal for wear and damage. Inspect the clutch end-plate-to-top disc clearance. If the clearance is out of tolerance, inspect the clutch discs and plates for wear and damage. If the discs are worn or damaged, replace them as a set. Inspect the clutch wave-plate height. If the height is out of tolerance, replace the wave-plate. If the discs and plates are OK, adjust the clearance with the clutch end plate.
Poor acceleration; flares when starting off in D and R; stall speed high in R	1. Shift cable broken or out of adjustment 2. 4th clutch defective	• Check for a loose shift cable at the shift lever and the transmission control shaft. • Check the 4th clutch pressure in the D and R positions. • Inspect the clutch piston, clutch piston check valve, and O-rings. Check the spring retainer for wear and damage. Inspect the clutch end-plate-to-top disc clearance. If the clearance is out of tolerance, inspect the clutch discs and plates for wear and damage. If the discs are worn or damaged, replace them as a set. Inspect the clutch wave-plate height. If the height is out of tolerance, replace the wave-plate. If the discs and plates are OK, adjust the clearance with the clutch end plate.
Poor acceleration; stall speed low in 2 and 1, and in D in 1st and 2nd	1. Shift solenoid valve E defective 2. Torque converter one-way clutch defective 3. Engine output low 4. Torque converter clutch piston defective 5. Lock-up shift valve defective	• Check the D indicator, and check for loose connectors. • Inspect the shift solenoid valve E for seizure, and O-ring for wear and damage. • Replace the torque converter.
Poor acceleration; stall speed low in R	1. Engine output low 2. Torque converter clutch piston defective 3. Lock-up shift valve defective	Replace the torque converter.

Symptom	Probable cause(s)	Notes
Engine idle vibration	1. Misadjusted engine and transmission mounts 2. Low ATF level 3. Shift solenoid valve E defective 4. Drive plate defective or transmission misassembled 5. Engine output low 6. Torque converter clutch piston defective 7. ATF pump worn or binding 8. Lock-up shift valve defective	• Check the ATF level, and check the ATF cooler lines for leakage and loose connections. If necessary, clean the ATF cooler lines. • Improper alignment of ATF pump and torque converter housing may cause ATF pump seizure. The symptoms are mostly an rpm-related ticking noise or a high pitched squeak. • Inspect the ATF strainer for clogging with particles of steel or aluminum. If the ATF strainer is clogged, replace it, and clean the torque converter, cooler, and lines. • Check the D indicator, and check for loose connectors. Inspect the shift solenoid valve E for seizure, and O-rings for wear and damage. • Check for a misinstalled/damaged drive plate. • Adjust the engine and transmission mounts. • Replace the torque converter.
Vehicle moves in N	1. Excessive ATF 2. Foreign material in separator plate orifice 3. Relief valve defective 4. 1st clutch defective 5. 2nd clutch defective 6. 3rd clutch defective 7. 4th clutch defective 8. 5th clutch defective 9. Clutch end plate-to-top disc clearance incorrect 10. Needle bearing seized up, worn, or damaged 11. Thrust washer seized up, worn, or damaged	• Check the ATF level, and drain the ATF if it is over-filled. • Check the 1st, 2nd, 3rd, 4th, and 5th clutch pressures. • Check the ATF strainer for debris. If the ATF strainer is clogged with particles of steel or aluminum, inspect the ATF pump. If the ATF pump is OK, find the damaged components that caused the debris. If no cause for contamination is found, replace the torque converter. • Inspect the clutch piston, clutch piston check valve, and O-rings. Check the spring retainer and retainer seal (1st, 2nd, and 3rd) for wear and damage. Inspect the clutch end-plate-to-top disc clearance. If the clearance is out of tolerance, inspect the clutch discs and plates for wear and damage. If the discs are worn or damaged, replace them as a set. Inspect the clutch wave-plate height. If the height is out of tolerance, replace the wave-plate. If the discs and plates are OK, adjust the clearance with the clutch end plate. • Inspect the 1st clutch feed pipe. If the 1st clutch feed pipe is scored, replace the end cover. • Inspect the 3rd clutch feed pipe. If the 3rd clutch feed pipe is scored, replace it and O-ring under the feed pipe guide. • Replace the secondary shaft if the bushing for the 1st or 3rd clutch feed pipe is loose or damaged. • Inspect the 5th clutch feed pipe. If the 5th clutch feed pipe is scored, replace it and the O-ring under the feed pipe guide. • Replace the mainshaft if the bushing for the 5th clutch feed pipe is loose or damaged.

(cont'd)

Symptom Troubleshooting Index (cont'd)

Symptom	Probable cause(s)	Notes
Late shift after shifting from N to D, or excessive shock when shifted into D	1. Shift solenoid valve E defective 2. A/T clutch pressure control solenoid valve A defective 3. A/T clutch pressure control solenoid valve B defective 4. A/T clutch pressure control solenoid valve C defective 5. Shift cable broken or out of adjustment 6. Connection between the shift cable and transmission or body is worn 7. Input shaft (mainshaft) speed sensor defective 8. Output shaft (countershaft) speed sensor defective 9. ATF temperature sensor defective 10. Foreign material in separator plate orifice 11. Servo control valve defective 12. 1st accumulator defective 13. 1st check ball stuck 14. Lock-up shift valve defective 15. 1st clutch defective	• Check the D indicator, and check for loose connectors. • Inspect the solenoid valve filter/gasket and O-rings for wear and damage, and inspect the solenoid valves for seizure. • Check the input shaft (mainshaft) speed sensor and output shaft (countershaft) speed sensor installation. • Check for a loose shift cable at the shift lever and the transmission control shaft. • Check the 1st clutch pressure. • Inspect the clutch piston, clutch piston check valve, and O-rings. Check the spring retainer and retainer seal for wear and damage. Inspect the clutch end-plate-to-top disc clearance. If the clearance is out of tolerance, inspect the clutch discs and plates for wear and damage. If the discs are worn or damaged, replace them as a set. Inspect the clutch wave-plate height. If the height is out of tolerance, replace the wave-plate. If the discs and plates are OK, adjust the clearance with the clutch end plate. • Inspect the 1st clutch feed pipe. If the 1st clutch feed pipe is scored, replace the end cover. • Replace the secondary shaft if the bushing for the 1st clutch feed pipe is loose or damaged.
Late shift after shifting from N to R, or excessive shock when shifted into R	1. Shift solenoid valve E defective 2. A/T clutch pressure control solenoid valve A defective 3. Shift cable broken or out of adjustment 4. Connection between the shift cable and transmission or body is worn 5. Input shaft (mainshaft) speed sensor defective 6. Output shaft (countershaft) speed sensor defective 7. ATF temperature sensor defective 8. Shift fork shaft stuck 9. Foreign material in separator plate orifice 10. Shift valve E defective 11. 4th/reverse accumulator defective 12. Lock-up shift valve defective 13. 4th clutch defective	• Check the D indicator, and check for loose connectors. • Inspect the solenoid valve filter/gasket and O-rings for wear and damage, and inspect the solenoid valves for seizure. • Check the input shaft (mainshaft) speed sensor and output shaft (countershaft) speed sensor installation. • Check for a loose shift cable at the shift lever and the transmission control shaft. • Inspect the clutch piston, clutch piston check valve, and O-rings. Check the spring retainer for wear and damage. Inspect the clutch end-plate-to-top disc clearance. If the clearance is out of tolerance, inspect the clutch discs and plates for wear and damage. If the discs are worn or damaged, replace them as a set. Inspect the clutch wave-plate height. If the height is out of tolerance, replace the wave-plate. If the discs and plates are OK, adjust the clearance with the clutch end plate. • Check for a missing shift fork bolt on the shift fork shaft. • Check the 4th clutch pressure. • Inspect the servo valve and O-ring.

Symptom	Probable cause(s)	Notes
Transmission does not shift	1. Input shaft (mainshaft) speed sensor defective 2. Output shaft (countershaft) speed sensor defective	• Check the D indicator, and check for loose connectors. • Check the input shaft (mainshaft) and output shaft (countershaft) speed sensor installation.
Excessive shock or flares on all upshifts and downshifts	1. A/T clutch pressure control solenoid valve B defective 2. A/T clutch pressure control solenoid valve C defective 3. Input shaft (mainshaft) speed sensor defective 4. Output shaft (countershaft) speed sensor defective 5. ATF temperature sensor defective 6. Foreign material in separator plate orifice	• Check the D indicator, and check for loose connectors. • Inspect the solenoid valve filter/gasket and O-rings for wear and damage, and inspect the solenoid valves for seizure. • Check the input shaft (mainshaft) speed sensor and output shaft (countershaft) speed sensor installation.
Excessive shock or flares on 1-2 upshift or 2-1 downshift	1. Shift solenoid valve E defective 2. A/T clutch pressure control solenoid valve A defective 3. A/T clutch pressure control solenoid valve B defective 4. A/T clutch pressure control solenoid valve C defective 5. 2nd clutch transmission fluid pressure switch defective 6. Foreign material in separator plate orifice 7. 1st accumulator defective 8. 2nd accumulator defective 9. 1st check ball stuck 10. 2nd check ball stuck 11. Lock-up shift valve defective 12. 1st clutch defective 13. 2nd clutch defective	• Check the D indicator, and check for loose connectors. • Inspect the solenoid valve filter/gasket and O-rings for wear and damage, and inspect the solenoid valves for seizure. • Check the 1st and 2nd clutch pressures. • Inspect the clutch piston, clutch piston check valve, and O-rings. Check the spring retainer and retainer seal for wear and damage. Inspect the clutch end-plate-to-top disc clearance. If the clearance is out of tolerance, inspect the clutch discs and plates for wear and damage. If the discs are worn or damaged, replace them as a set. Inspect the clutch wave-plate height. If the height is out of tolerance, replace the wave-plate. If the discs and plates are OK, adjust the clearance with the clutch end plate. • Inspect the 1st clutch feed pipe. If the 1st clutch feed pipe is scored, replace the end cover. • Replace the secondary shaft if the bushing for the 1st clutch feed pipe is loose or damaged.

(cont'd)

Symptom Troubleshooting Index (cont'd)

Symptom	Probable cause(s)	Notes
Excessive shock or flares on 2-3 upshift or 3-2 downshift	1. A/T clutch pressure control solenoid valve B defective 2. A/T clutch pressure control solenoid valve C defective 3. 3rd clutch transmission fluid pressure switch defective 4. Foreign material in separator plate orifice 5. 2nd accumulator defective 6. 3rd accumulator defective 7. 2nd check ball stuck 8. 2nd clutch defective 9. 3rd clutch defective	• Check the D indicator, and check for loose connectors. • Inspect the solenoid valve filter/gasket and O-rings for wear and damage, and inspect the solenoid valves for seizure. • Check the 2nd and 3rd clutch pressures. • Inspect the clutch piston, clutch piston check valve, and O-rings. Check the spring retainer and retainer seal for wear and damage. Inspect the clutch end-plate-to-top disc clearance. If the clearance is out of tolerance, inspect the clutch discs and plates for wear and damage. If the discs are worn or damaged, replace them as a set. Inspect the clutch wave-plate height. If the height is out of tolerance, replace the wave-plate. If the discs and plates are OK, adjust the clearance with the clutch end plate. • Inspect the 3rd clutch feed pipe. If the 3rd clutch feed pipe is scored, replace it and the O-ring under the feed pipe guide. • Replace the secondary shaft if the bushing for the 3rd clutch feed pipe is loose or damaged.
Excessive shock or flares on 3-4 upshift or 4-3 downshift	1. A/T clutch pressure control solenoid valve B defective 2. A/T clutch pressure control solenoid valve C defective 3. Foreign material in separator plate orifice 4. 3rd accumulator defective 5. 4th accumulator defective 6. 3rd clutch defective 7. 4th clutch defective	• Check the D indicator, and check for loose connectors. • Inspect the solenoid valve filter/gasket and O-rings for wear and damage, and inspect the solenoid valves for seizure. • Check the 3rd and 4th clutch pressures. • Inspect the clutch piston, clutch piston check valve, and O-rings. Check the spring retainer and retainer seal (3rd) for wear and damage. Inspect the clutch end-plate-to-top disc clearance. If the clearance is out of tolerance, inspect the clutch discs and plates for wear and damage. If the discs are worn or damaged, replace them as a set. Inspect the clutch wave-plate height. If the height is out of tolerance, replace the wave-plate. If the discs and plates are OK, adjust the clearance with the clutch end plate. • Inspect the 3rd clutch feed pipe. If the 3rd clutch feed pipe is scored, replace it and the O-ring under the feed pipe guide. • Replace the secondary shaft if the bushing for the 3rd clutch feed pipe is loose or damaged.

Symptom	Probable cause(s)	Notes
Excessive shock or flares on 4-5 upshift or 5-4 downshift	1. A/T clutch pressure control solenoid valve B defective 2. A/T clutch pressure control solenoid valve C defective 3. Foreign material in separator plate orifice 4. 4th accumulator defective 5. 5th accumulator defective 6. 4th clutch defective 7. 5th clutch defective	• Check the D indicator, and check for loose connectors. • Inspect the solenoid valve filter/gasket and O-rings for wear and damage, and inspect the solenoid valves for seizure. • Check the 4th and 5th clutch pressures. • Inspect the clutch piston, clutch piston check valve, and O-rings. Check the spring retainer for wear and damage. Inspect the clutch end-plate-to-top disc clearance. If the clearance is out of tolerance, inspect the clutch discs and plates for wear and damage. If the discs are worn or damaged, replace them as a set. Inspect the clutch wave-plate height. If the height is out of tolerance, replace the wave-plate. If the discs and plates are OK, adjust the clearance with the clutch end plate. • Inspect the 5th clutch feed pipe. If the 5th clutch feed pipe is scored, replace it and the O-ring under the feed pipe guide. • Replace the mainshaft if the bushing for the 5th clutch feed pipe is loose or damaged.
Noise from transmission in all shift lever positions	1. ATF pump worn or binding 2. Mainshaft bearing, countershaft bearing, or secondary shaft bearing defective	• Improper alignment of ATF pump and torque converter housing may cause ATF pump seizure. The symptoms are mostly an rpm-related ticking noise or a high pitched squeak. • Be careful not to damage the torque converter housing when replacing the main ball bearing. You may also damage the ATF pump when you torque down the main valve body. This will result in ATF pump seizure if not detected. Use the proper tools. • Install the main seal flush with the torque converter housing. If you push it into the torque converter housing until it bottoms out, it will block the fluid return passage and result in damage. • Inspect the ATF strainer for clogging with particles of steel or aluminum. If the ATF strainer is clogged, replace it, and clean the torque converter, cooler, and lines. • Inspect the mainshaft, countershaft and secondary shaft for wear or damage.
Vehicle does not accelerate above 31 mph (50 km/h)	Torque converter one-way clutch defective	Replace the torque converter.
Vibration in all shift lever positions	Drive plate defective or transmission misassembled	• Check for a misinstalled/damaged drive plate. • Adjust the engine and transmission mounts.

(cont'd)

Symptom Troubleshooting Index (cont'd)

Symptom	Probable cause(s)	Notes
Shift lever does not operate smoothly	1. Transmission range switch defective or out of adjustment 2. Shift cable broken or out of adjustment 3. Connection between the shift cable and transmission or body is worn	• Check the D indicator, and check for loose connectors. • Inspect the transmission range switch for operation. • Check for a loose shift cable at the shift lever and the transmission control shaft.
Transmission does not shift into P	1. Shift cable broken or out of adjustment 2. Connection between the shift cable and transmission or body is worn 3. Park mechanism defective	• Check for a loose shift cable at the shift lever and the transmission control shaft. • Check the park pawl spring installation and the park lever spring installation. If installation is incorrect, install the spring correctly. Make sure that the park lever stop is not installed upside down. Check the distance between the park pawl shaft and park lever roller pin. If the distance is out of tolerance, adjust the distance with the park lever stop.
Torque converter clutch does not disengage	1. Shift solenoid valve E defective 2. A/T clutch pressure control solenoid valve A defective 3. Torque converter clutch piston defective 4. Lock-up shift valve defective 5. Lock-up control valve defective	• Check the D indicator, and check for loose connectors. • Inspect the solenoid valve filter/gasket and O-rings for wear and damage, and inspect the solenoid valves for seizure. • Replace the torque converter.
Torque converter clutch does not operate smoothly	1. Shift solenoid valve E defective 2. A/T clutch pressure control solenoid valve A defective 3. Torque converter clutch piston defective 4. Torque converter check valve defective 5. Lock-up shift valve defective 6. Lock-up control valve defective	• Check the D indicator, and check for loose connectors. • Inspect the solenoid valve filter/gasket and O-rings for wear and damage, and inspect the solenoid valves for seizure. • Replace the torque converter.

Symptom	Probable cause(s)	Notes
Torque converter clutch does not engage	1. Shift solenoid valve E defective 2. A/T clutch pressure control solenoid valve A defective 3. Input shaft (mainshaft) speed sensor defective 4. Output shaft (countershaft) speed sensor defective 5. Torque converter clutch piston defective 6. Torque converter check valve defective 7. Lock-up shift valve defective 8. Lock-up control valve defective	• Check the D indicator, and check for loose connectors. • Inspect the solenoid valve filter/gasket and O-rings for wear and damage, and inspect the solenoid valves for seizure. • Replace the torque converter. • Check the input shaft (mainshaft) speed sensor and output shaft (countershaft) speed sensor installation.
A/T gear position indicator does not indicate shift lever positions	1. Transmission range switch defective or out of adjustment 2. Shift cable broken or out of adjustment 3. Connection between the shift cable and transmission or body is worn	• Check the D indicator, and check for loose connectors. • Inspect the transmission range switch operation. • Check for a loose shift cable at the shift lever and the transmission control shaft.
Speedometer and odometer do not work	Output shaft (countershaft) speed sensor defective	• Check the D indicator, and check for loose connectors. • Inspect the transmission range switch operation. • Check the output shaft (countershaft) speed sensor installation.
The engine does not rev to high rpm, and the transmission upshifts at low rpm	VTEC rocker arms defective	Check the engine rocker arms.

Component Location Index

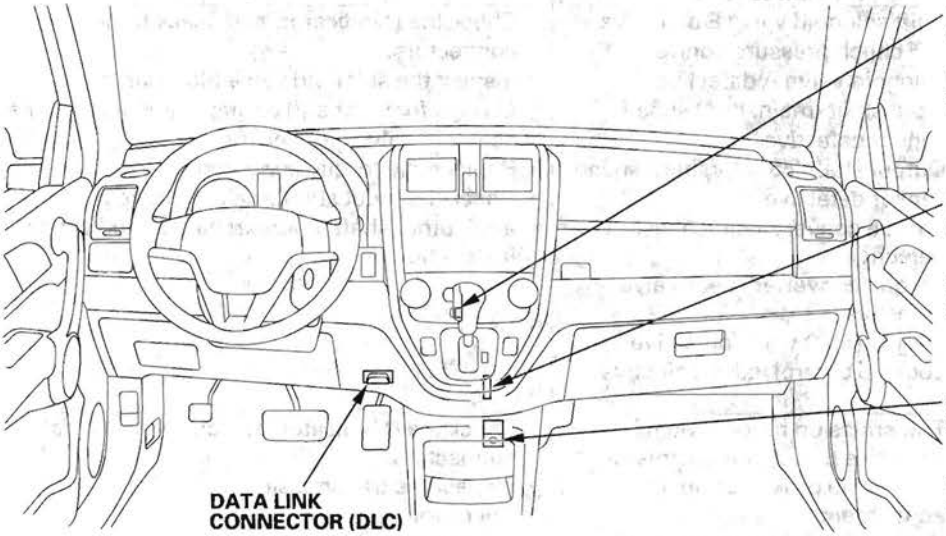

D3 SWITCH
Circuit Troubleshooting, page 14-302
Test, page 14-304
Replacement, page 14-305

PARK PIN SWITCH
Key Interlock System Circuit Troubleshooting, page 14-314
Test, page 14-320
Replacement, page 14-320

SHIFT LOCK SOLENOID
Shift Lock System Circuit Troubleshooting, page 14-309
Test, page 14-316
Replacement, page 14-317

DATA LINK CONNECTOR (DLC)

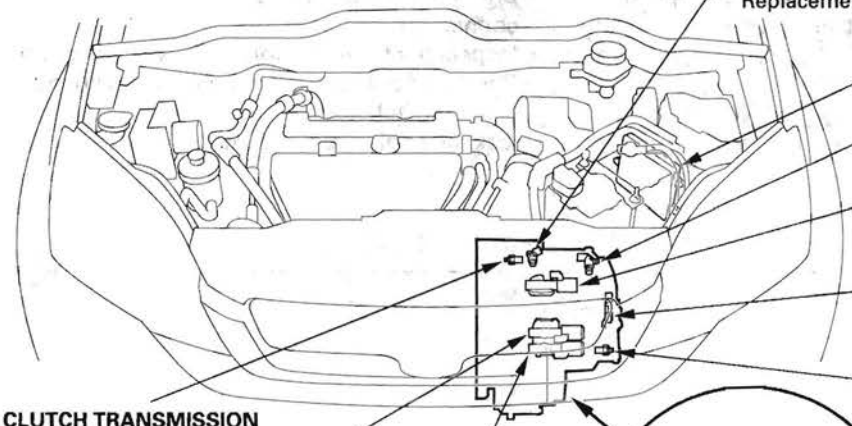

OUTPUT SHAFT (COUNTERSHAFT) SPEED SENSOR
Replacement, page 14-233

POWERTRAIN CONTROL MODULE (PCM)

INPUT SHAFT (MAINSHAFT) SPEED SENSOR
Replacement, page 14-233

A/T CLUTCH PRESSURE CONTROL SOLENOID VALVE A
Test, page 14-225
Replacement, page 14-227

TRANSMISSION RANGE SWITCH
Test, page 14-292
Replacement, page 14-294

3RD CLUTCH TRANSMISSION FLUID PRESSURE SWITCH
Replacement, page 14-234

2ND CLUTCH TRANSMISSION FLUID PRESSURE SWITCH
Replacement, page 14-234

A/T CLUTCH PRESSURE CONTROL SOLENOID VALVE C
Test, page 14-230
Replacement, page 14-232

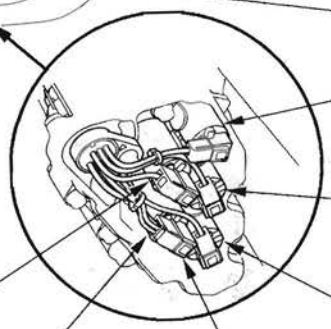

SHIFT SOLENOID VALVE C
Test, page 14-218
Replacement, page 14-222

SHIFT SOLENOID VALVE B
Test, page 14-218
Replacement, page 14-222

SHIFT SOLENOID VALVE A
Test, page 14-218
Replacement, page 14-222

A/T CLUTCH PRESSURE CONTROL SOLENOID VALVE B
Test, page 14-228
Replacement, page 14-232

SHIFT SOLENOID VALVE E
Test, page 14-218
Replacement, page 14-222

SHIFT SOLENOID VALVE D
Test, page 14-218
Replacement, page 14-222

ATF TEMPERATURE SENSOR
Test/Replacement, page 14-235

System Description

General Operation

The automatic transmission is a combination of a 3-element torque converter and triple-shaft electronically controlled unit which provides 5 speeds forward and 1 reverse. The entire unit is positioned in line with the engine.

Torque Converter, Gears, and Clutches
The torque converter consists of a pump, turbine, and stator assembly in a single unit. The converter housing (pump) is connected to the engine crankshaft and turns as the engine turns. Around the outside of the torque converter is a ring gear which meshes with the starter pinion when the engine is being started. The entire torque converter assembly serves as a flywheel while transmitting power to the transmission mainshaft, the transmission has three parallel shafts; the mainshaft, the countershaft, and the secondary shaft. The mainshaft is in line with the engine crankshaft, and includes the 4th and 5th clutches, and gears for 5th, 4th, reverse, and idler. The mainshaft reverse gear is integral with the mainshaft 4th gear. The countershaft includes the gears for 1st, 2nd, 3rd, 4th, 5th, reverse, park, and the final drive. The final drive gear is integral with the countershaft. The countershaft 4th gear and the countershaft reverse gear can be locked to the countershaft providing 4th or reverse gear, depending on which way the selector is moved. The secondary shaft includes the 1st, 2nd, and 3rd clutches, and gears for 1st, 2nd, 3rd, and idler. The idler shaft is located between the mainshaft and secondary shaft, and the idler gear transmits power between the mainshaft and the secondary shaft. The gears on the mainshaft and the secondary shaft are in constant mesh with those on the countershaft. When certain combinations of gears in the transmission are engaged by the clutches, power is transmitted through the mainshaft, then to the secondary shaft to the countershaft or through the mainshaft to the countershaft to provide drive.

Electronic Control
The electronic control system consists of the powertrain control module (PCM), sensors, and solenoid valves. Shifting and lock-up are electronically controlled for comfortable driving under all conditions. The PCM is located under the hood next to the battery.

Hydraulic Control
The valve bodies include the main valve body, the regulator valve body, and the servo body. They are bolted to the torque converter housing. The main valve body contains the manual valve, the shift valves A, B, C, and E, the relief valve, the lock-up control valve, the cooler check valve, the servo control valve, and the ATF pump gears. The regulator valve body contains the regulator valve, the torque converter check valve, lock-up shift valve, and the 1st and 3rd accumulators. The servo body contains the servo valve, the shift valve D, accumulators for 2nd, 4th, and 5th, and shift solenoid valves for A, B, C, D, and E. Fluid from the regulator passes through the manual valve to the various control valves. The 1st, 3rd, 5th clutches receive fluid from their respective feed pipes, and the 2nd and the 4th clutches receive fluid from the internal hydraulic circuit.

Shift Control Mechanism
The PCM controls shift solenoid valves A, B, C, D, and E, and the A/T clutch pressure control solenoid valves A, B, and C, while receiving input signals from various sensors and switches located throughout the engine and transmission. The shift solenoid valves shift the positions of the shift valves to switch the port leading hydraulic pressure to the clutch. The A/T clutch pressure control solenoid valves A, B, and C regulate their respective pressure, and pressurize to the clutches to engage it and its corresponding gear. The pressures of the A/T clutch pressure control solenoid valves also apply to the shift valves to switch the port.

Lock-up Mechanism
The lock-up mechanism operates in the D position (2nd, 3rd, 4th, and 5th), and in D position D3 driving mode (2nd and 3rd). The pressurized fluid is drained from the back of the torque converter through a fluid passage, causing the torque converter clutch piston to be held against the torque converter cover. As this takes place, the mainshaft rotates at the same speed as the engine crankshaft. Together with the hydraulic control, the PCM optimizes the timing and volume of the lock-up mechanism. When the shift solenoid valve E is turned on by the PCM, shift solenoid valve E pressure switches the lock-up shift valve on and off. The A/T clutch pressure control solenoid valve A and the lock-up control valve control the volume of the lock-up conditions.

(cont'd)

System Description (cont'd)

General Operation (cont'd)

Gear Selection
The shift lever has six positions; P: PARK, R: REVERSE, N: NEUTRAL, D: DRIVE 1st through 5th gear range, and 1st through 3rd gear range with D3 driving mode, 2: 2nd gear, and 1: 1st gear.

Position	Description
P: PARK	Front wheels locked; park pawl engaged with park gear on countershaft. All clutches are released.
R: REVERSE	Reverse; reverse selector engaged with countershaft reverse gear and 4th clutch engaged.
N: NEUTRAL	All clutches are released.
D: DRIVE (1st through 5th)	General driving; starts off in 1st, shifts automatically to 2nd, 3rd, 4th, then 5th, depending on vehicle speed and throttle position. Downshifts through 4th, 3rd, 2nd, and 1st on deceleration to stop. The lock-up mechanism operates in 2nd, 3rd, 4th, and 5th gears.
D: DRIVE with D3 driving mode (1st through 3rd)	Used the rapid acceleration at highway speeds and general driving, up-hill and down-hill driving; starts off in 1st, shifts automatically to 2nd, then 3rd, depending on vehicle speed and throttle position. Downshifts through 2nd to 1st on deceleration to stop. The lock-up mechanism operates in 2nd and 3rd gears.
2: SECOND	Used for engine braking or better traction starting off on loose or slippery surfaces; stays in 2nd gear, does not shift up and down.
1: FIRST	Used for engine braking; stays in 1st gear, does not shift up.

Starting is possible only in the P and N positions because of a slide-type neutral-safety switch.

Automatic Transmission (A/T) Gear Position Indicator
The A/T gear position indicator in the instrument panel shows which shift lever position has been selected without having to look down at the shift lever.

Transfer Mechanism (4WD)
The transfer mechanism consists of the transfer drive gear on the differential, the transfer shaft, the transfer drive gear (hypoid gear), the transfer output shaft (hypoid gear), and the companion flange. The transfer mechanism assembly is on the rear of the transmission, beside the differential. The transfer drive gear on the differential drives the transfer shaft and transfer drive gear (hypoid gear), and the transfer drive gear (hypoid gear) drives the transfer output shaft (hypoid gear). Power is transmitted from the transfer drive gear on the differential to the rear differential via the transfer shaft and the propeller shaft.

Clutches and Gears

The 5-speed automatic transmission uses hydraulically-actuated clutches to engage or disengage the transmission gears. When hydraulic pressure is introduced into the clutch drum, the clutch piston moves. This presses the friction discs and steel plates together, locking them so they don't slip. Power is then transmitted through the engaged clutch pack to its hub-mounted gear. Likewise, when the hydraulic pressure is bled from the clutch pack, the piston releases the friction discs and the steel plates, and they are free to slide past each other. This allows the gear to spin independently on its shaft, transmitting no power.

NOTE: The illustration shows the 4WD transmission, 2WD does not have the transfer mechanism.

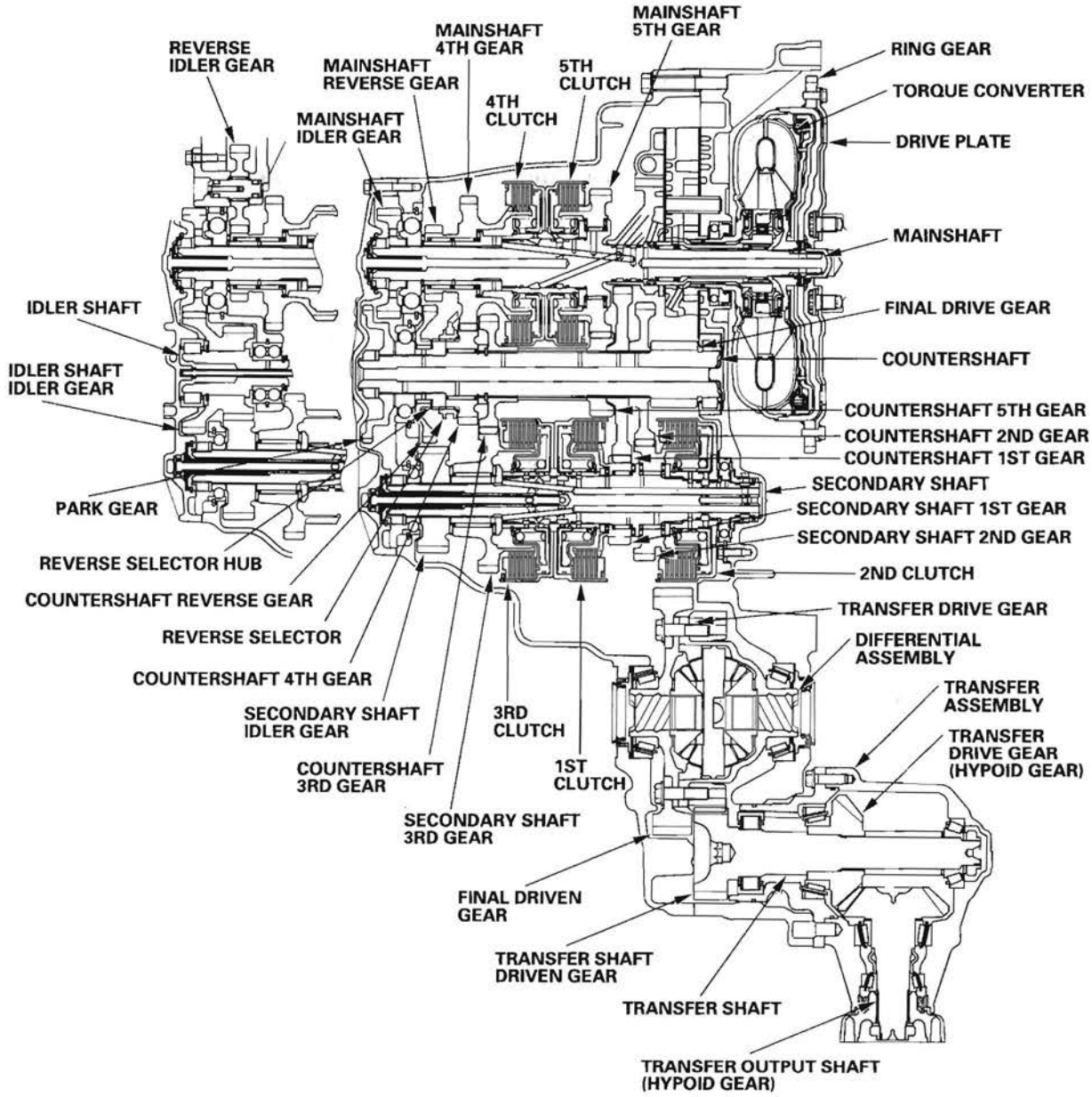

(cont'd)

System Description (cont'd)

Clutches and Gears (cont'd)

1st Clutch
The 1st clutch engages/disengages 1st gear, and is located at the middle of the secondary shaft. The 1st clutch is joined back-to-back to the 3rd clutch. The 1st clutch is supplied hydraulic pressure by its ATF feed pipe within the secondary shaft.

2nd Clutch
The 2nd clutch engages/disengages 2nd gear, and is located at the end of the secondary shaft, opposite the end cover. The 2nd clutch is supplied hydraulic pressure by a circuit connected to the internal hydraulic circuit.

3rd Clutch
The 3rd clutch engages/disengages 3rd gear, and is located at the middle of the secondary shaft. The 3rd clutch is joined back-to-back to the 1st clutch. The 3rd clutch is supplied hydraulic pressure by its ATF feed pipe within the secondary shaft.

4th Clutch
The 4th clutch engages/disengages 4th gear, as well as reverse gear, and is located at the middle of the mainshaft. The 4th clutch is joined back-to-back to the 5th clutch. The 4th clutch is supplied hydraulic pressure by its ATF feed pipe within the mainshaft.

5th Clutch
The 5th clutch engages/disengages 5th gear, and is located at the middle of the mainshaft. The 5th clutch is joined back-to-back to the 4th clutch. The 5th clutch is supplied hydraulic pressure by its ATF feed pipe within the mainshaft.

Gear operation
Gears on the mainshaft:
- 4th gear engages/disengages with the mainshaft by the 4th clutch.
- 5th gear engages/disengages with the mainshaft by the 5th clutch.
- Reverse gear engages/disengages with the mainshaft by the 4th clutch.
- Idler gear is splined with the mainshaft, and rotates with the mainshaft.

Gears on the countershaft:
- Final drive gear is integral with the countershaft.
- 1st, 2nd, 3rd, 5th, and park gears are splined with the countershaft, and rotate with the countershaft.
- 4th gear and reverse gear rotate freely from the countershaft. The reverse selector engages 4th gear and reverse gear with the reverse selector hub. The reverse selector hub is splined to the countershaft so that the 4th gear and reverse gear engage with the countershaft.

Gears on the secondary shaft:
- 1st gear engages/disengages with the secondary shaft by the 1st clutch.
- 2nd gear engages/disengages with the secondary shaft by the 2nd clutch.
- 3rd gear engages/disengages with the secondary shaft by the 3rd clutch.
- Idler gear is splined with the secondary shaft, and rotates with the secondary shaft.

The idler gear on the idler shaft transmits power between the mainshaft and the secondary shaft.
The reverse idler gear transmits power from the mainshaft reverse gear to the countershaft reverse gear, and changes rotational direction of the countershaft to reverse.

Power Flow

P Position

Hydraulic pressure is not applied to the clutch. Power is not transmitted to the countershaft. The countershaft is locked by the park pawl, interlocking the park gear.

N Position

Engine power transmitted from the torque converter drives the mainshaft idler gear, the idler shaft idler gear, and the secondary shaft idler gear, but hydraulic pressure is not applied to the clutches. Power is not transmitted to the countershaft. In this position, the position of the reverse selector differs according to whether the shift lever shifted from the D or R position:

- When shifted from the D position, the reverse selector engages with the countershaft 4th gear and the reverse selector hub, and the 4th gear engages with the countershaft.
- When shifted from the R position, the reverse selector engages with the countershaft reverse gear and the reverse selector hub, and the reverse gear engages with the countershaft.

NOTE: The illustration shows the 4WD transmission; 2WD does not have the transfer mechanism.

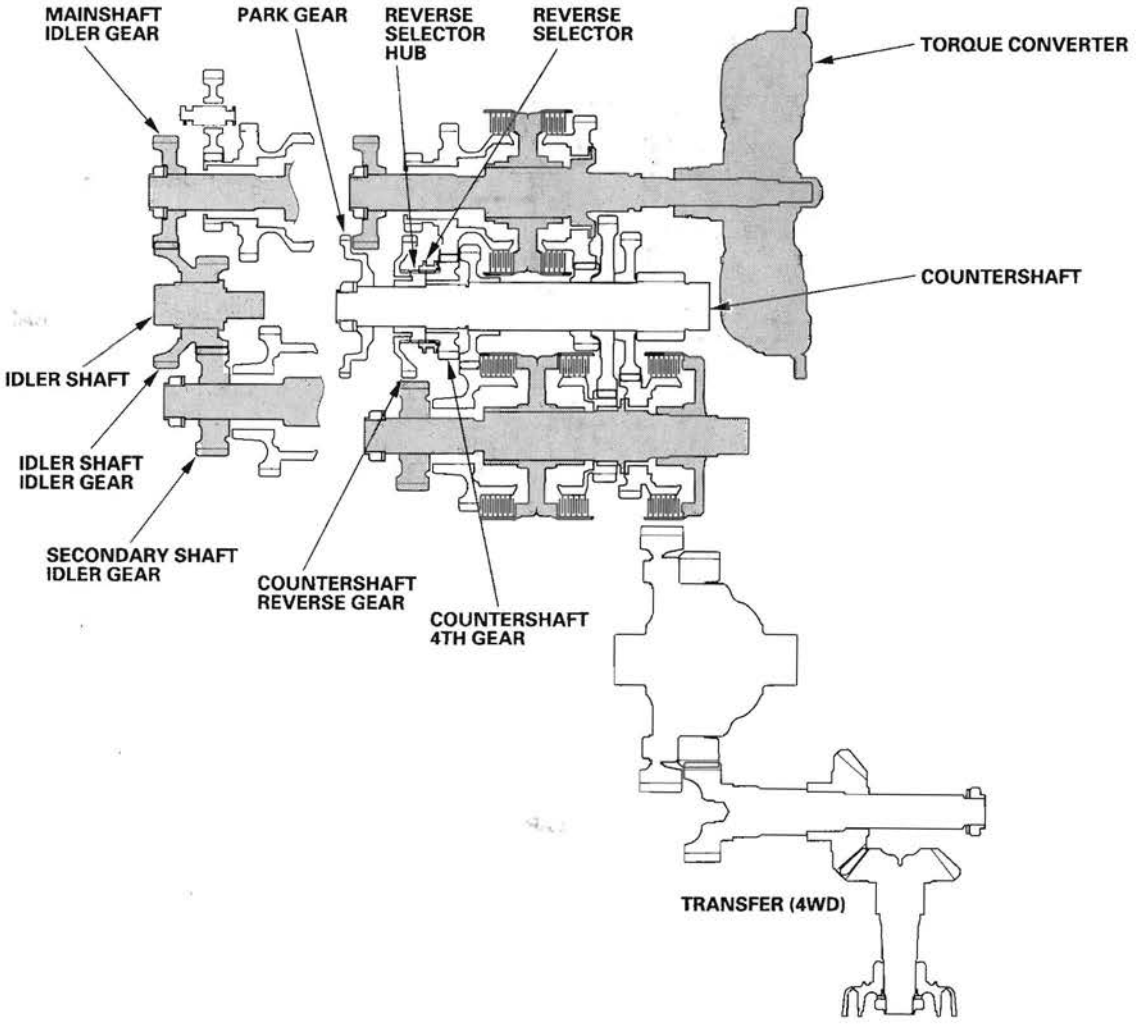

(cont'd)

System Description (cont'd)

Power Flow (cont'd)

1st Gear

- Hydraulic pressure is applied to the 1st clutch, then the 1st clutch engages the secondary shaft 1st gear with the secondary shaft.
- The mainshaft idler gear drives the secondary shaft via the idler shaft idler gear and the secondary shaft idler gear.
- The secondary shaft 1st gear drives the countershaft 1st gear and the countershaft.
- Power is transmitted to the final drive gear, which in turn drives the final driven gear, and the transfer drive gear (4WD).
- 4WD: The transfer drive gear drives the transfer drive gear (hypoid gear) and the transfer output shaft (hypoid gear).

NOTE: The illustration shows the 4WD transmission; 2WD does not have the transfer mechanism.

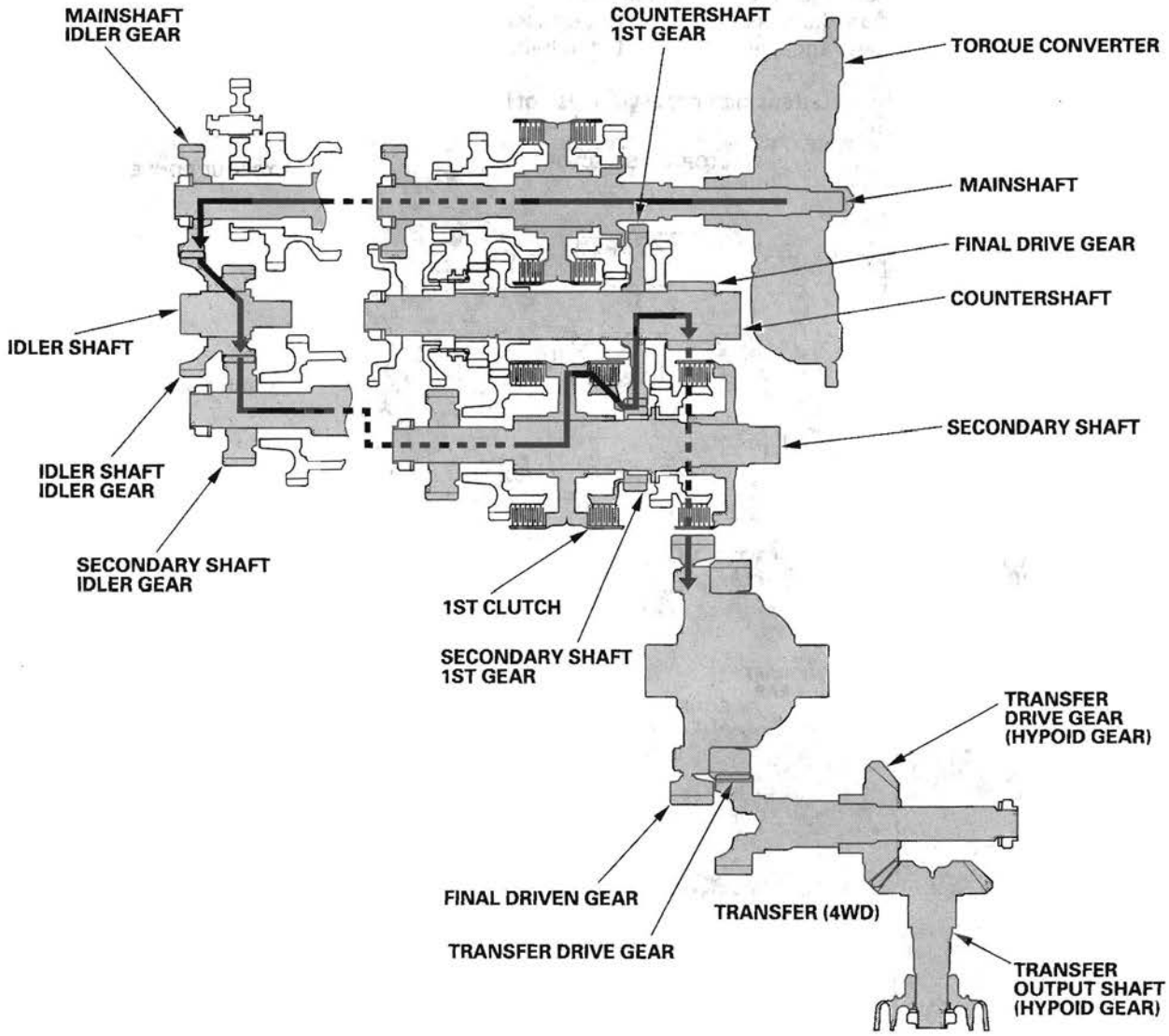

2nd Gear

- Hydraulic pressure is applied to the 2nd clutch, then the 2nd clutch engages the secondary shaft 2nd gear with the secondary shaft.
- The mainshaft idler gear drives the secondary shaft via the idler shaft idler gear and the secondary shaft idler gear.
- The secondary shaft 2nd gear drives the countershaft 2nd gear and the countershaft.
- Power is transmitted to the final drive gear, which in turn drives the final driven gear, and the transfer drive gear (4WD).
- 4WD: The transfer drive gear drives the transfer drive gear (hypoid gear) and the transfer output shaft (hypoid gear).

NOTE: The illustration shows the 4WD transmission; 2WD does not have the transfer mechanism.

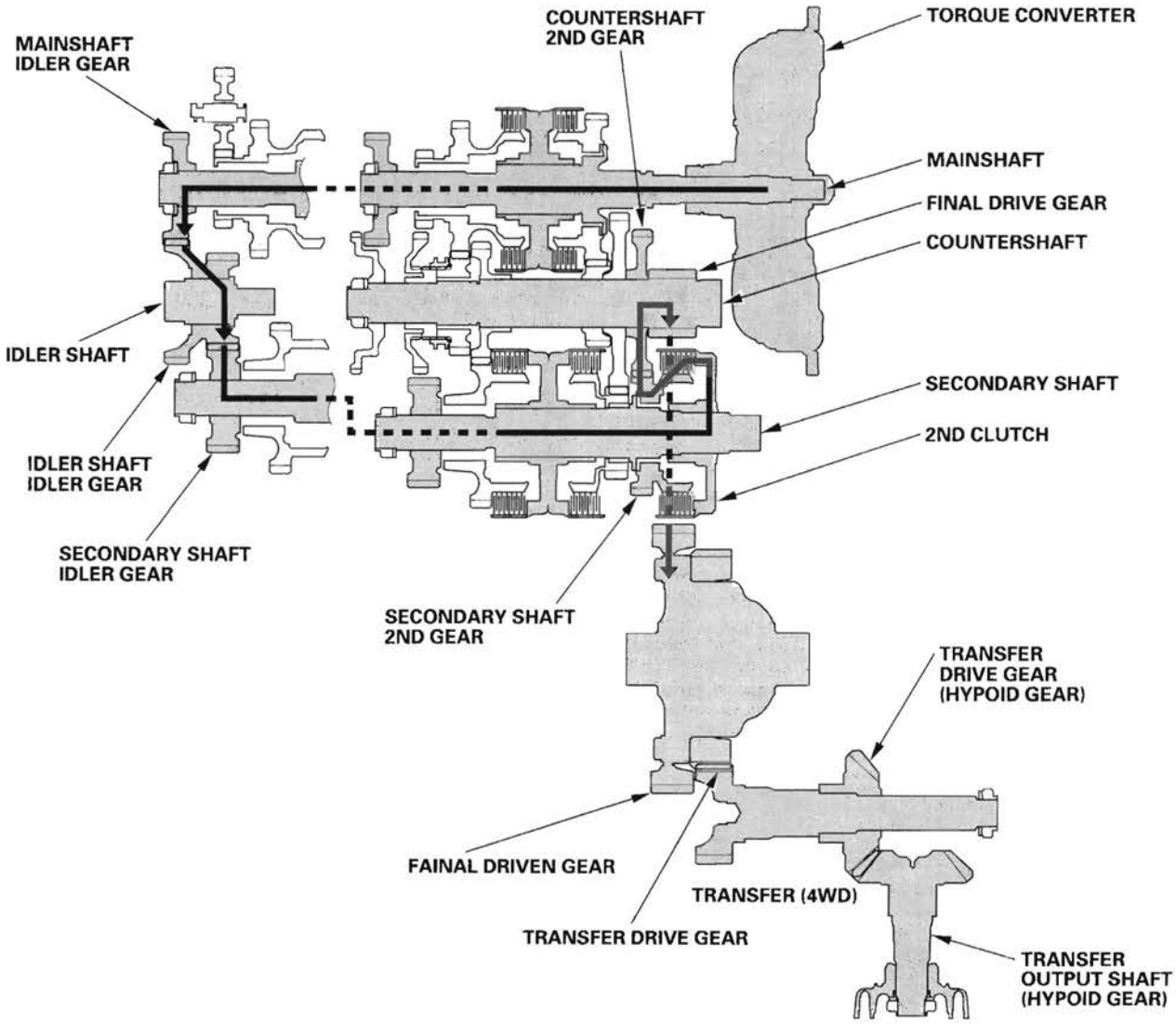

(cont'd)

System Description (cont'd)

Power Flow (cont'd)

3rd Gear

- Hydraulic pressure is applied to the 3rd clutch, then the 3rd clutch engages the secondary shaft 3rd gear with the secondary shaft.
- The mainshaft idler gear drives the secondary shaft via the idler shaft idler gear and secondary shaft idler gear.
- The secondary shaft 3rd gear drives the countershaft 3rd gear and the countershaft.
- Power is transmitted to the final drive gear, which in turn drives the final driven gear, and the transfer drive gear (4WD).
- 4WD: The transfer drive gear drives the transfer drive gear (hypoid gear) and the transfer output shaft (hypoid gear).

NOTE: The illustration shows the 4WD transmission; 2WD does not have the transfer mechanism.

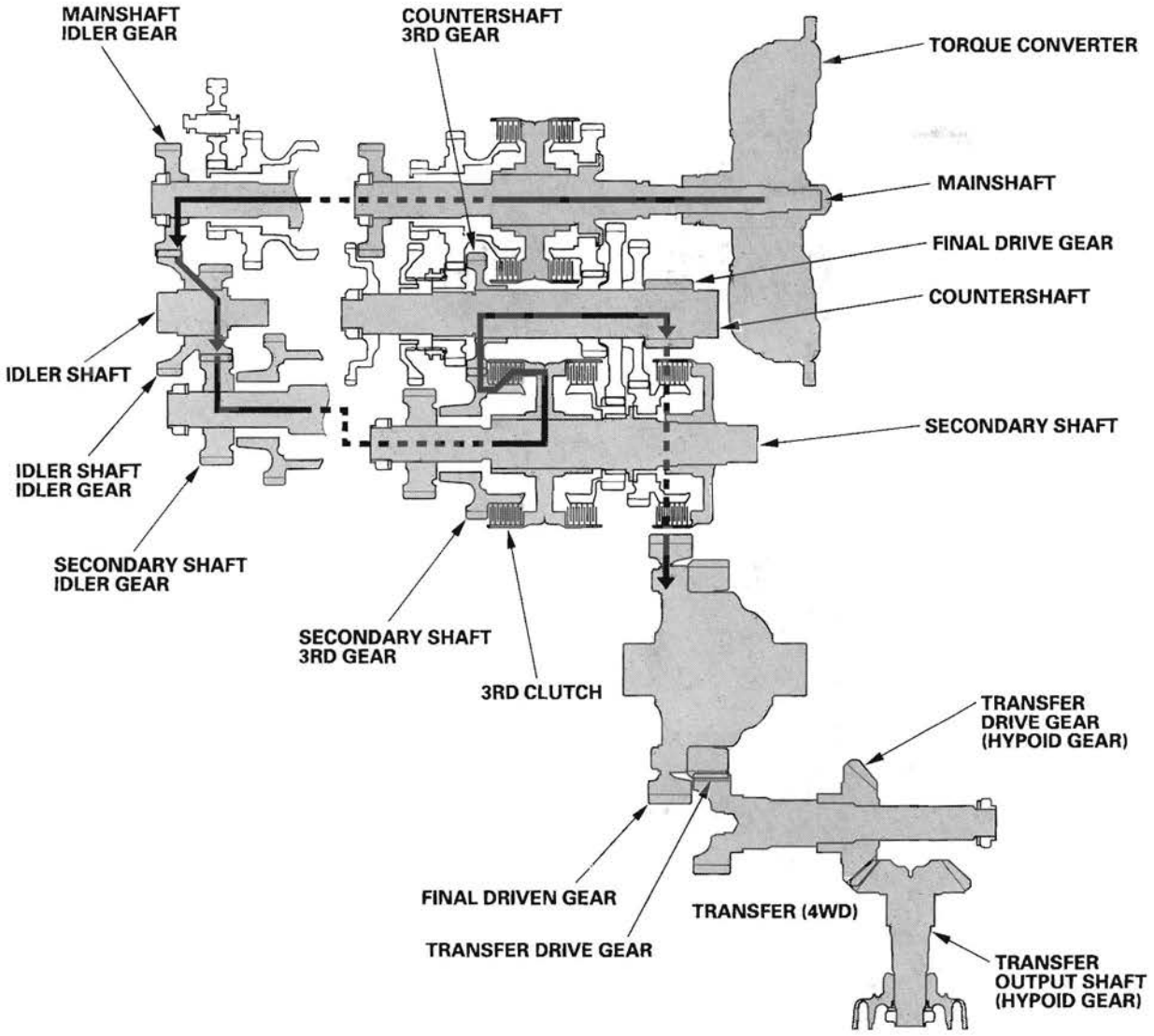

4th Gear

- Hydraulic pressure is applied to the servo valve to engage the reverse selector with the countershaft 4th gear and reverse selector hub while the shift lever is in forward range (D, 2, and 1 positions).
- Hydraulic pressure is also applied to the 4th clutch, then the 4th clutch engages the mainshaft 4th gear with the mainshaft.
- The mainshaft 4th gear drives the countershaft 4th gear and the countershaft.
- Power is transmitted to the final drive gear, which in turn drives the final driven gear, and the transfer drive gear (4WD).
- 4WD: The transfer drive gear drives the transfer drive gear (hypoid gear) and the transfer output shaft (hypoid gear).

NOTE: The illustration shows the 4WD transmission; 2WD does not have the transfer mechanism.

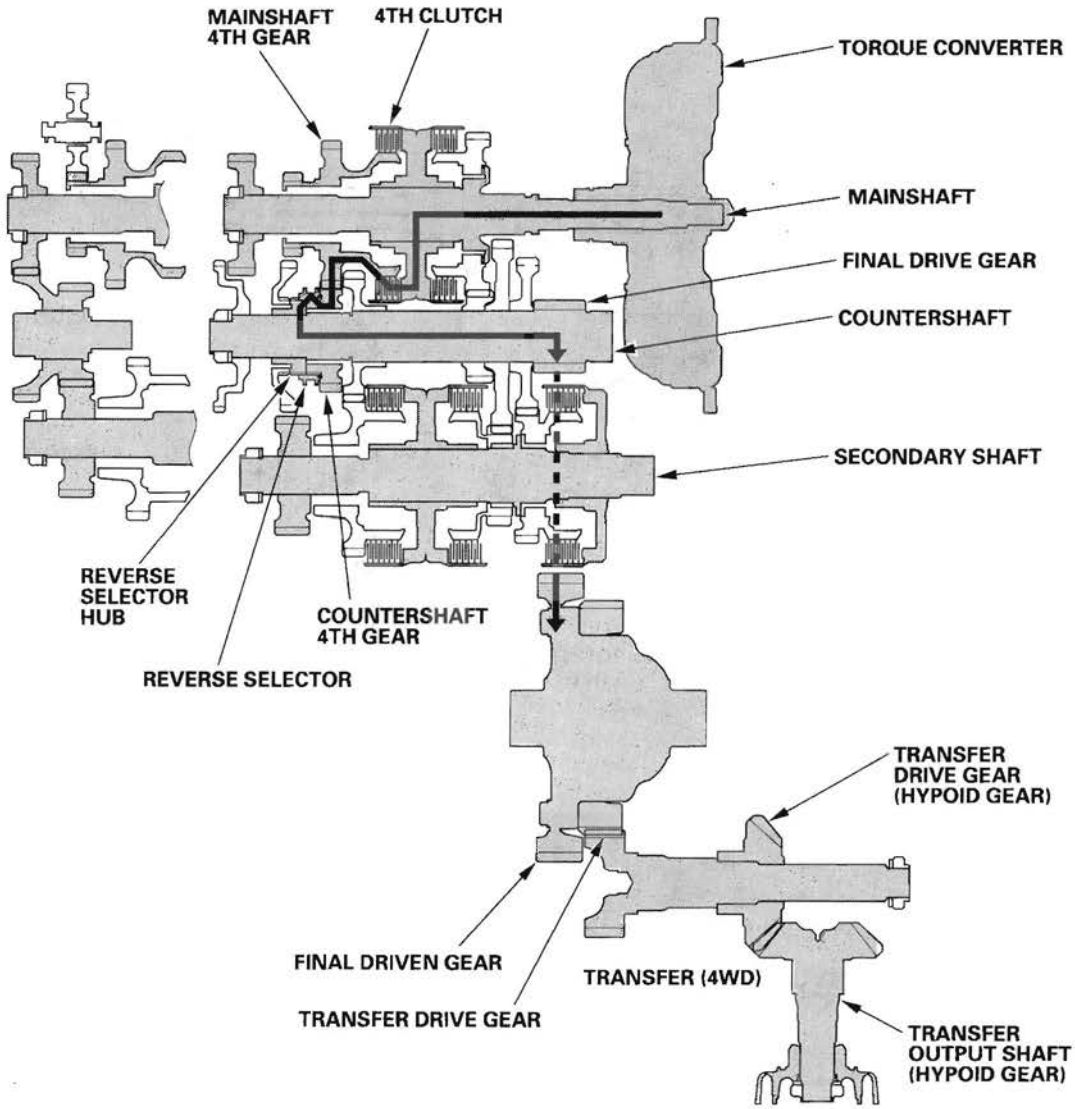

(cont'd)

System Description (cont'd)

Power Flow (cont'd)

5th Gear

- Hydraulic pressure is applied to the 5th clutch, then the 5th clutch engages the mainshaft 5th gear with the mainshaft.
- The mainshaft 5th gear drives the countershaft 5th gear and the countershaft.
- Power is transmitted to the final drive gear, which in turn drives the final driven gear, and the transfer drive gear (4WD).
- 4WD: The transfer drive gear drives the transfer drive gear (hypoid gear) and the transfer output shaft (hypoid gear).

NOTE: The illustration shows the 4WD transmission; 2WD does not have the transfer mechanism.

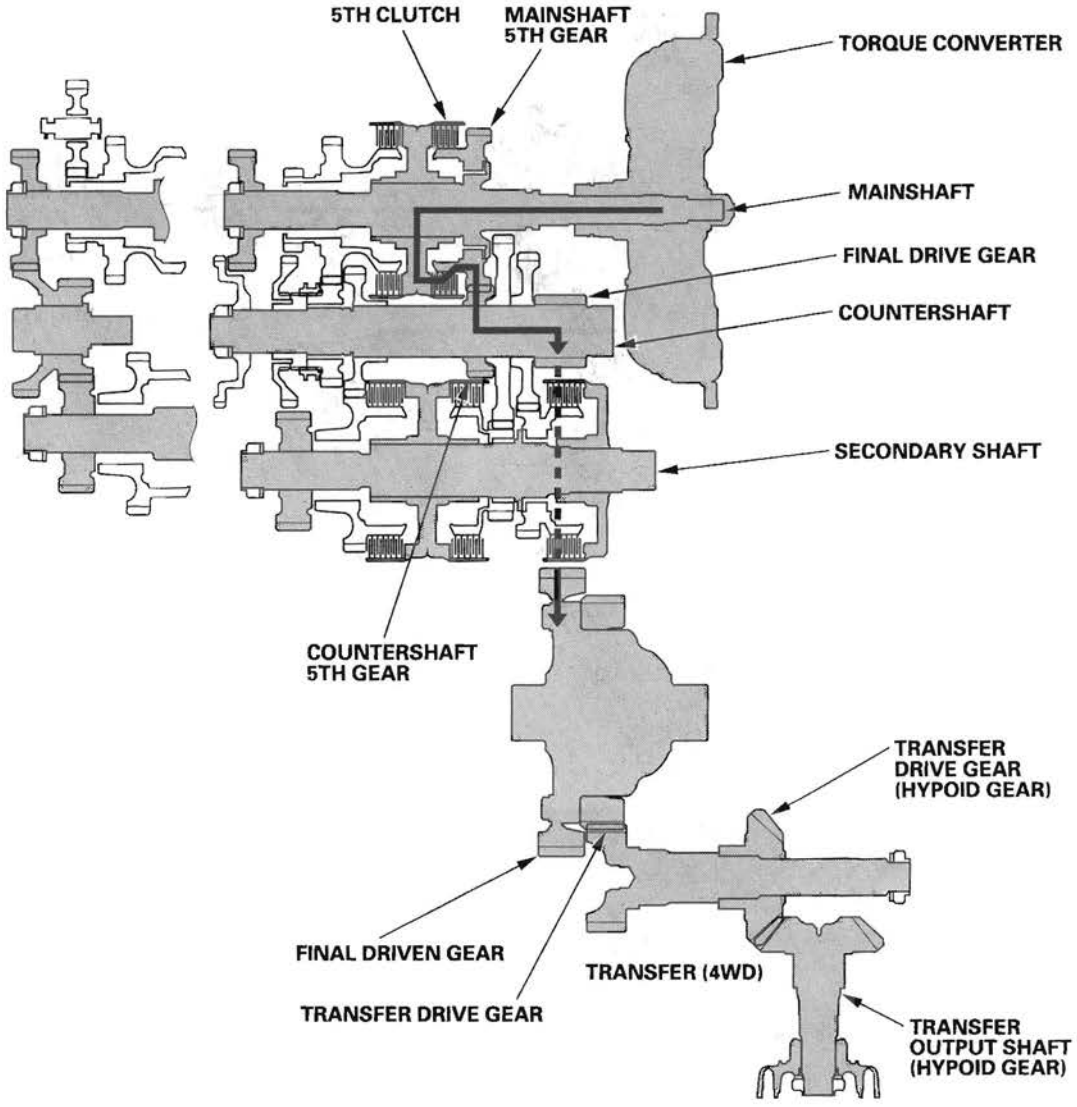

R Position

- Hydraulic pressure is applied to the servo valve to engage the reverse selector with the countershaft reverse gear and reverse selector hub while the shift lever is in the R position.
- Hydraulic pressure is also applied to the 4th clutch, then the 4th clutch engages the mainshaft reverse gear with the mainshaft.
- The mainshaft reverse gear drives the countershaft reverse gear via the reverse idler gear.
- The rotation direction of the countershaft reverse gear is changed by the reverse idler gear.
- The countershaft reverse gear drives the countershaft via the reverse selector, which drives the reverse selector hub.
- Power is transmitted to the final drive gear, which in turn drives the final driven gear, and the transfer drive gear (4WD).
- 4WD: The transfer drive gear drives the transfer drive gear (hypoid gear) and the transfer output shaft (hypoid gear).

NOTE: The illustration shows the 4WD transmission; 2WD does not have the transfer mechanism.

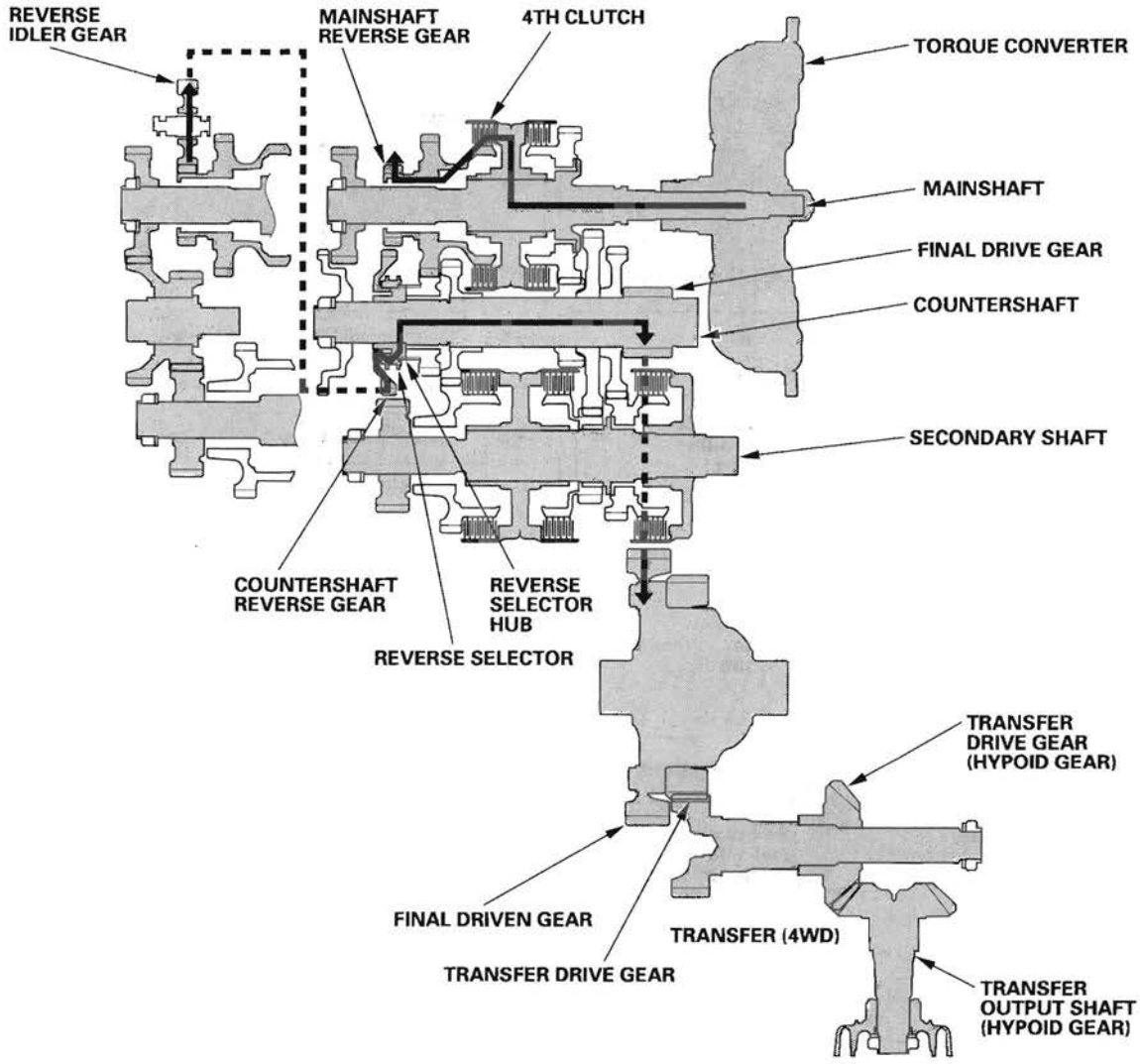

System Description (cont'd)

Electronic Control System

Functional Diagram

The electronic control system consists of the powertrain control module (PCM), sensors, and solenoid valves. Shifting and lock-up are electronically controlled for comfortable driving under all conditions.

The PCM receives input signals from the sensors, switches, and other control units, processes data, and outputs signals for the engine control system and A/T control system. The A/T control system includes shift control, grade logic control, clutch pressure control, and lock-up control.
The PCM actuates the shift solenoid valves and the A/T clutch pressure control solenoid valves to control shifting transmission gears and torque converter.

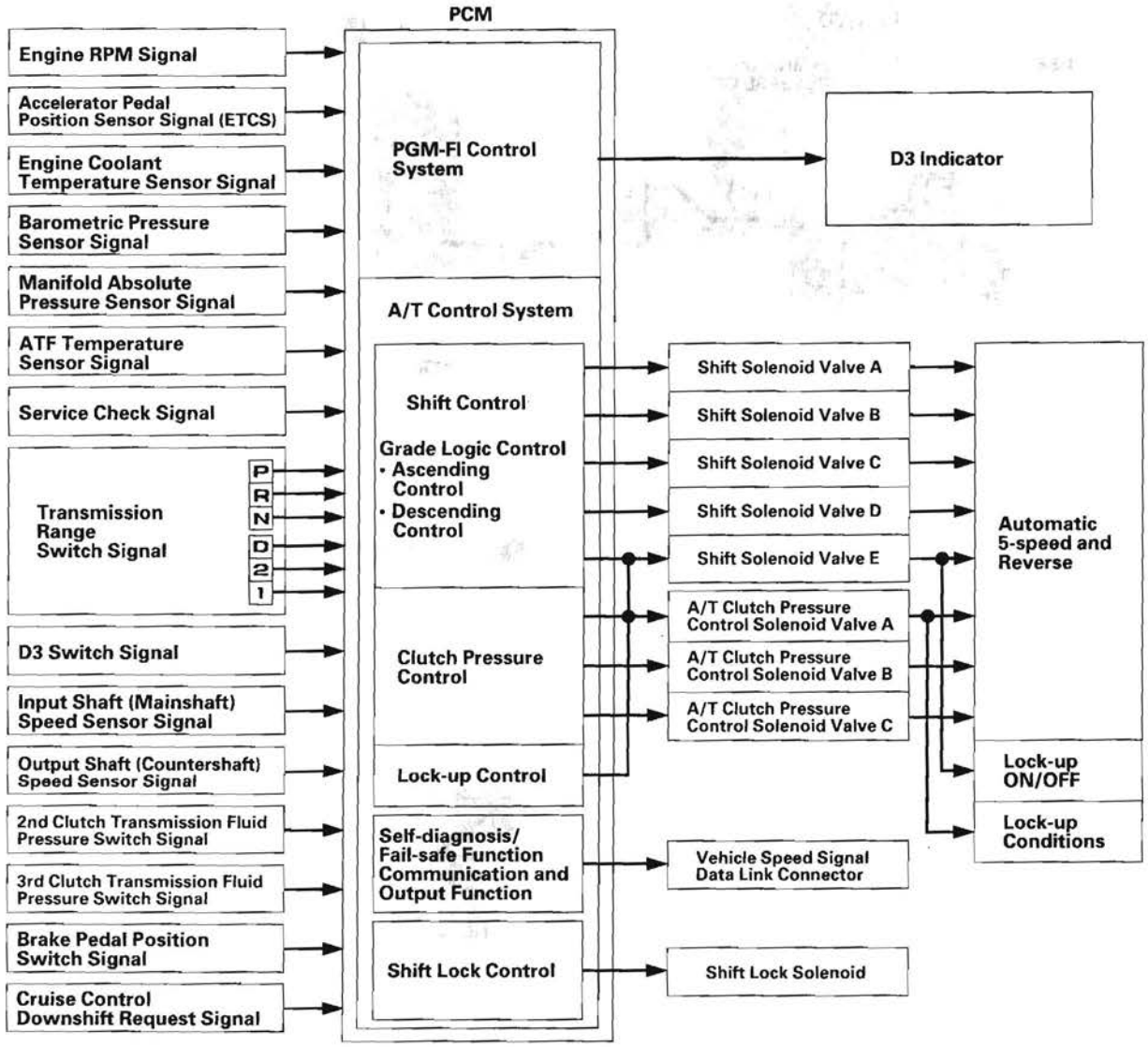

Shift Control

The PCM instantly determines which gear should be selected by various signals sent from sensors and switches, and it actuates the shift solenoid valves A, B, C, D, and E to control shifting transmission gears.

Shift solenoid valves are a normally closed type. Shift solenoid valve opens the port of shift solenoid valve pressure leading to shift valves while shift solenoid valve is turned ON by the PCM, and closes the port when shift solenoid valve is OFF.

The combination of driving signals to shift solenoid valves A, B, C, D, and E are shown in the table.

Position	Gear position	Shift solenoid valves				
		A	B	C	D	E
D	Shifting from N position	OFF	ON	ON	OFF	OFF
	Stays in 1st	ON	ON	ON	OFF	OFF
	Shifting gears between 1st and 2nd	OFF	ON	ON	OFF	OFF
	Stays in 2nd	OFF	ON	OFF	ON	OFF or ON
	Shifting gears between 2nd and 3rd	OFF	ON	ON	ON	OFF or ON
	Stays in 3rd	OFF	OFF	ON	OFF	OFF or ON
	Shifting gears between 3rd and 4th	OFF	OFF	OFF	OFF	OFF or ON
	Stays in 4th	ON	OFF	OFF	OFF	OFF or ON
	Shifting gears between 4th and 5th	ON	OFF	OFF	ON	OFF or ON
	Stays in 5th	ON	OFF	ON	ON	OFF or ON
2	2nd gear	OFF	ON	OFF	ON	OFF
1	1st gear	ON	ON	ON	OFF	OFF
R	Shifting from P and N position	OFF	ON	OFF	OFF	ON
	Stays in reverse	ON	ON	OFF	OFF	ON
	Reverse inhibit	OFF	OFF	ON	OFF	OFF
P	Park	OFF	ON	OFF	OFF	ON
N	Neutral	OFF	ON	ON	OFF	OFF

(cont'd)

System Description (cont'd)

Electronic Control System (cont'd)

Shift Control - Grade Logic Control

The grade logic control system has been adopted to control shifting in the D position. The PCM compares actual driving conditions with programmed driving conditions, based on signals from the accelerator pedal position sensor, the throttle position sensor, the engine coolant temperature sensor, the barometric pressure sensor, the brake pedal position switch signal, and the shift lever position signal, to control shifting while the vehicle is ascending or descending a slope.

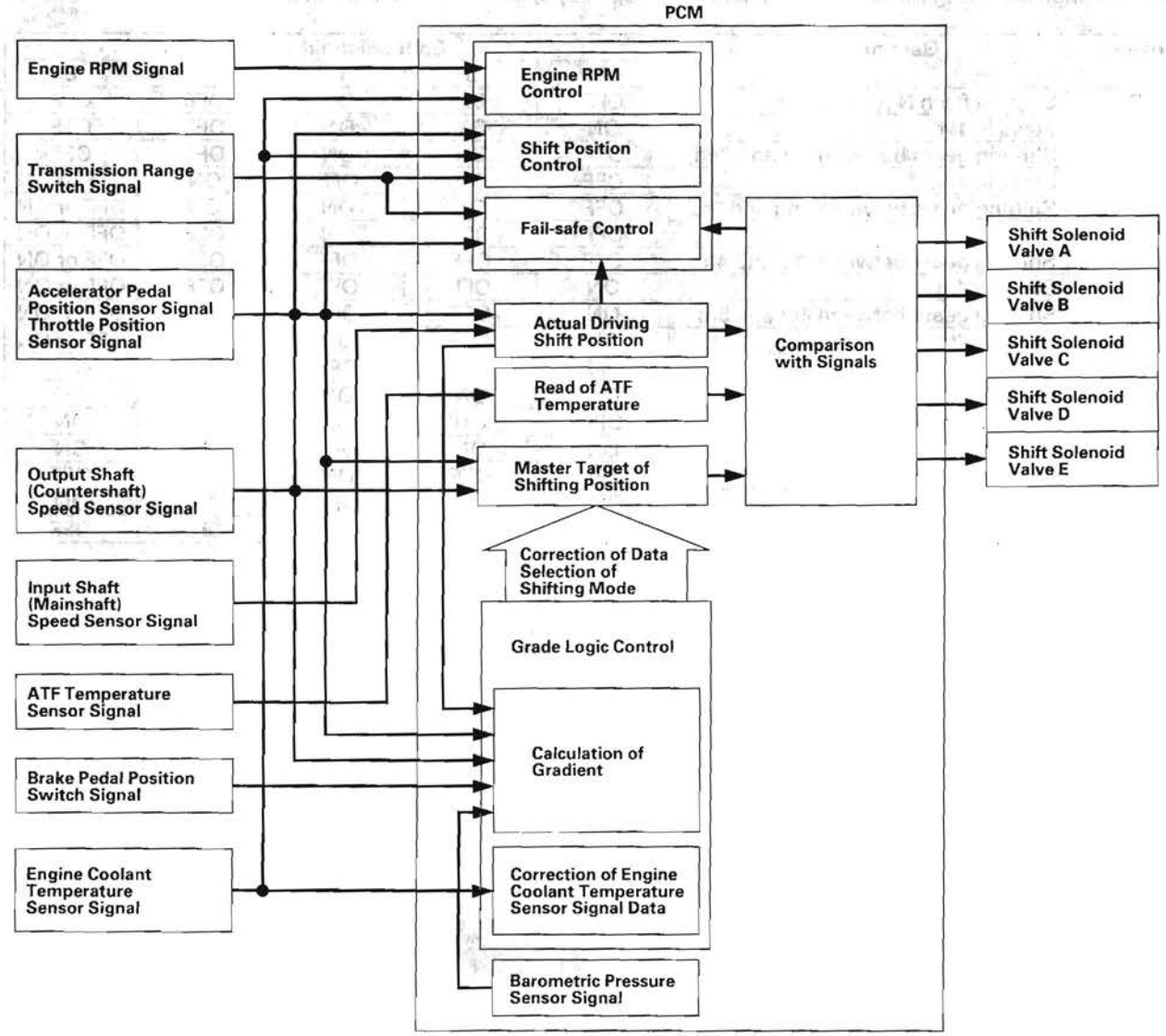

Grade Logic Control: Ascending Control
When the PCM determines that the vehicle is climbing a hill in the D position, the grade logic system extends the engagement area of 2nd, 3rd, and 4th gears to prevent the transmission from frequently shifting between 2nd and 3rd gears, between 3rd and 4th gears, and between 4th and 5th gears, so the vehicle can run smooth and have more power when needed.

Shift programs stored in the PCM between 2nd and 3rd gears, between 3rd and 4th gears, and between 4th and 5th gears, enable it to automatically select the most suitable gear according to the magnitude of a gradient.

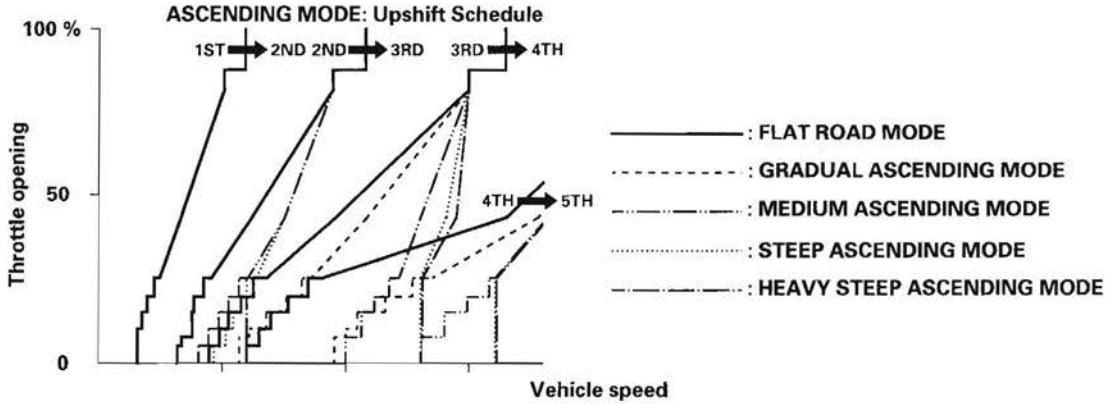

Grade Logic Control: Descending Control
When the PCM determines that the vehicle is going down a hill in the D position, the shift-up speed from 4th to 5th gear, from 3rd to 4th gear, and from 2nd to 3rd gear (when the throttle is closed) becomes faster than the set speed for flat road driving to widen the 4th gear, 3rd gear, and 2nd gear driving area. This, in combination with engine braking from the deceleration lock-up, achieves smooth driving when the vehicle is descending. There are three descending modes with different 4th gear driving areas, 3rd gear driving areas, and 2nd gear driving areas according to the magnitude of a gradient stored in the PCM. When the vehicle is in 5th gear or 4th gear, and you are decelerating when you are applying the brakes on a steep hill, the transmission will downshift to lower gear. When you accelerate, the transmission will then return to a higher gear.

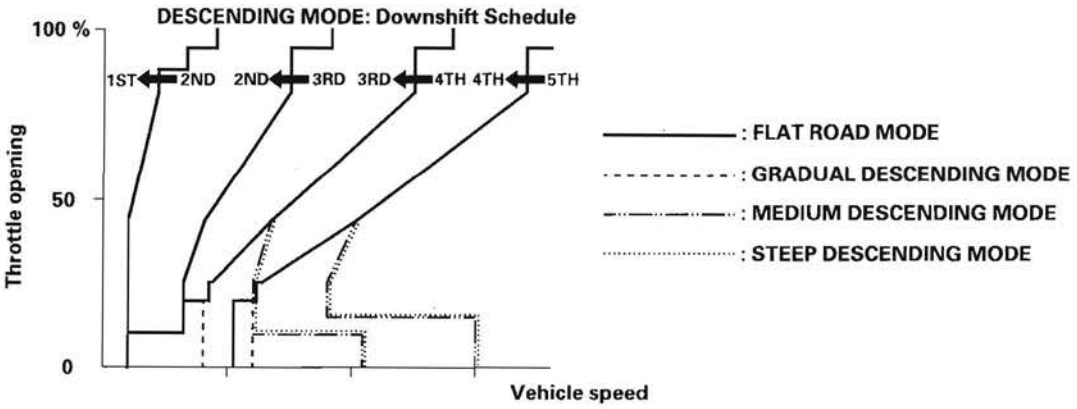

(cont'd)

System Description (cont'd)

Electronic Control System (cont'd)

Shift Control - D Position D3 Driving Mode Control

The automatic transmission is provided with the D3 driving mode in the D position. The D position has two modes; general driving mode (shifts gears automatically 1st through 5th), and the D3 driving mode (shifts gears automatically 1st through 3rd). The transmission mode switches by pushing the D3 switch on the shift lever knob in the D position.

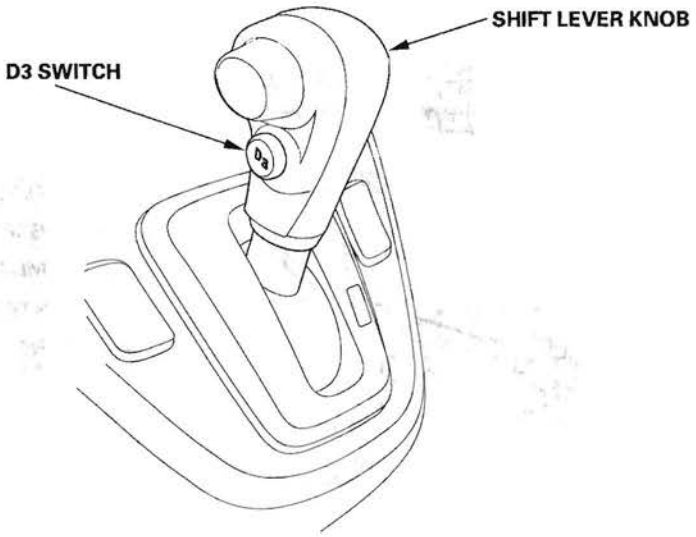

In the D3 driving mode, the D3 indicator next to the D indicator in the gauge assembly comes on. The D3 driving mode is cancelled by pushing the D3 switch, and the D3 indicator goes off. Also, the D3 driving mode is cancelled when the ignition switch is turned off. When the shift lever is moved out of the D position in the D3 driving mode, the D3 indicator goes off, but the transmission returns into D3 driving mode when returning the shift lever into the D position, and the D3 indicator comes on.

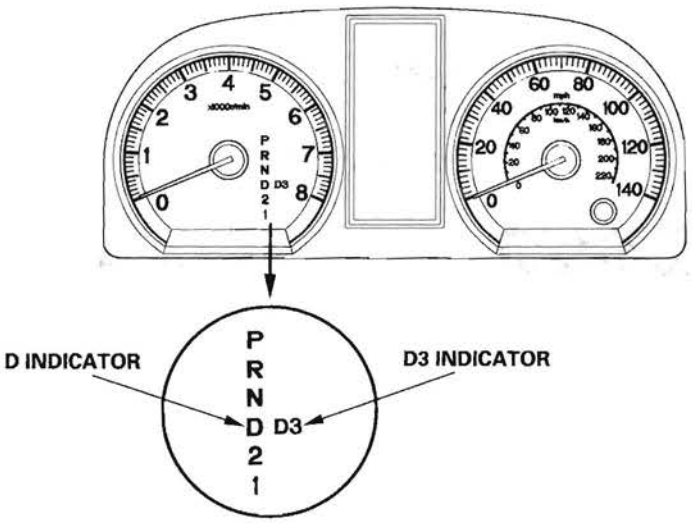

Clutch Pressure Control

The PCM actuates A/T clutch pressure control solenoid valves A, B, and C to control the clutch pressure. When shifting between gears, the clutch pressure regulated by A/T clutch pressure control solenoid valves A, B, and C engages and disengages the clutch smoothly.

The PCM receives input signals from the various sensors and switches, processes data, and outputs current to A/T clutch pressure control solenoid valves A, B, and C.

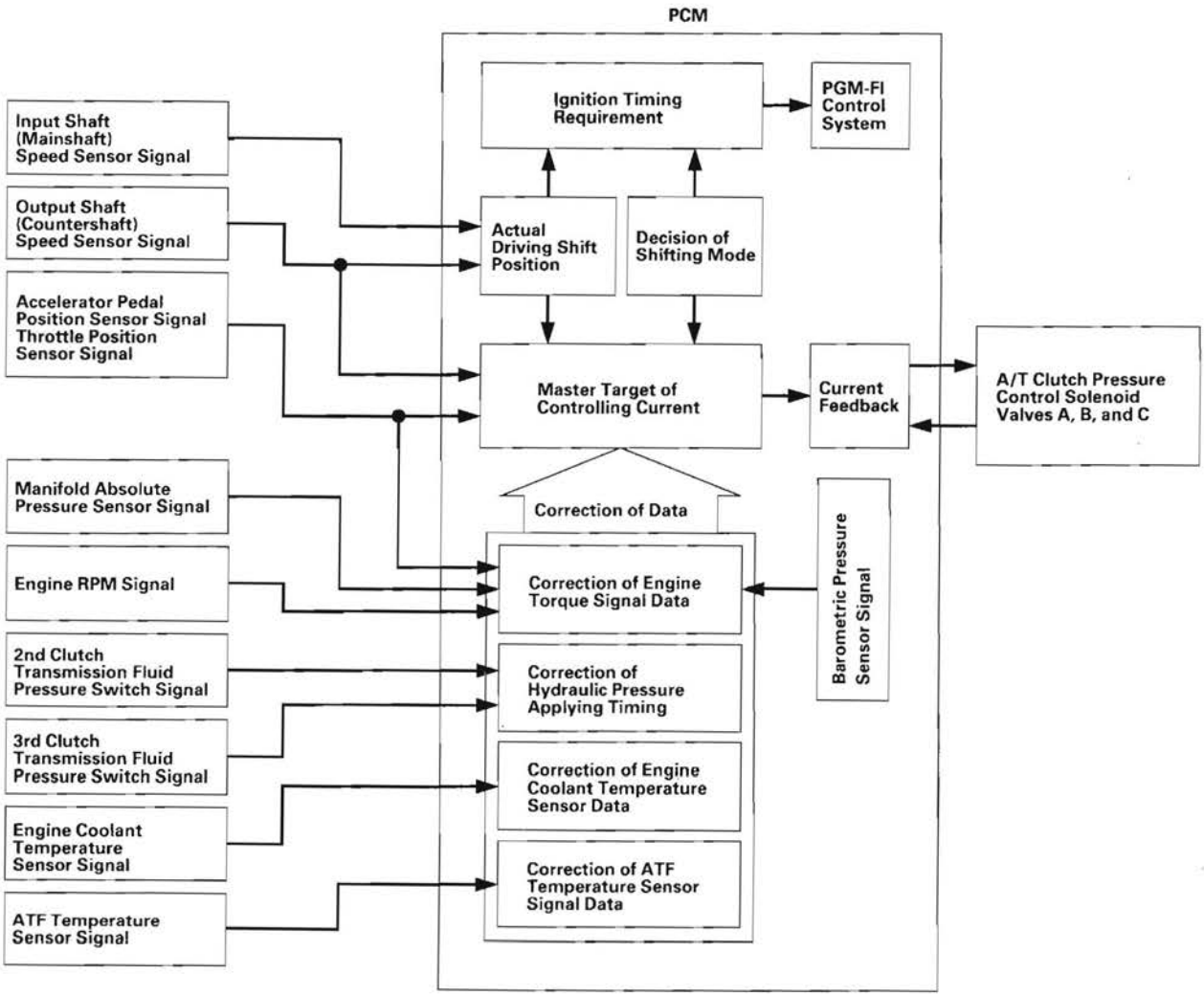

(cont'd)

System Description (cont'd)

Electronic Control System (cont'd)

Lock-up Control

The shift solenoid valve E controls the hydraulic pressure to switch the lock-up shift valve and lock-up ON and OFF. The PCM actuates the shift solenoid valve E and the A/T clutch pressure control solenoid valve A to start lock-up. The A/T clutch pressure control solenoid valve A applies and regulates hydraulic pressure to the lock-up control valve to control the volume of the lock-up.

The lock-up mechanism operates in the D position (2nd, 3rd, 4th, and 5th), and in the D position D3 driving mode (2nd and 3rd).

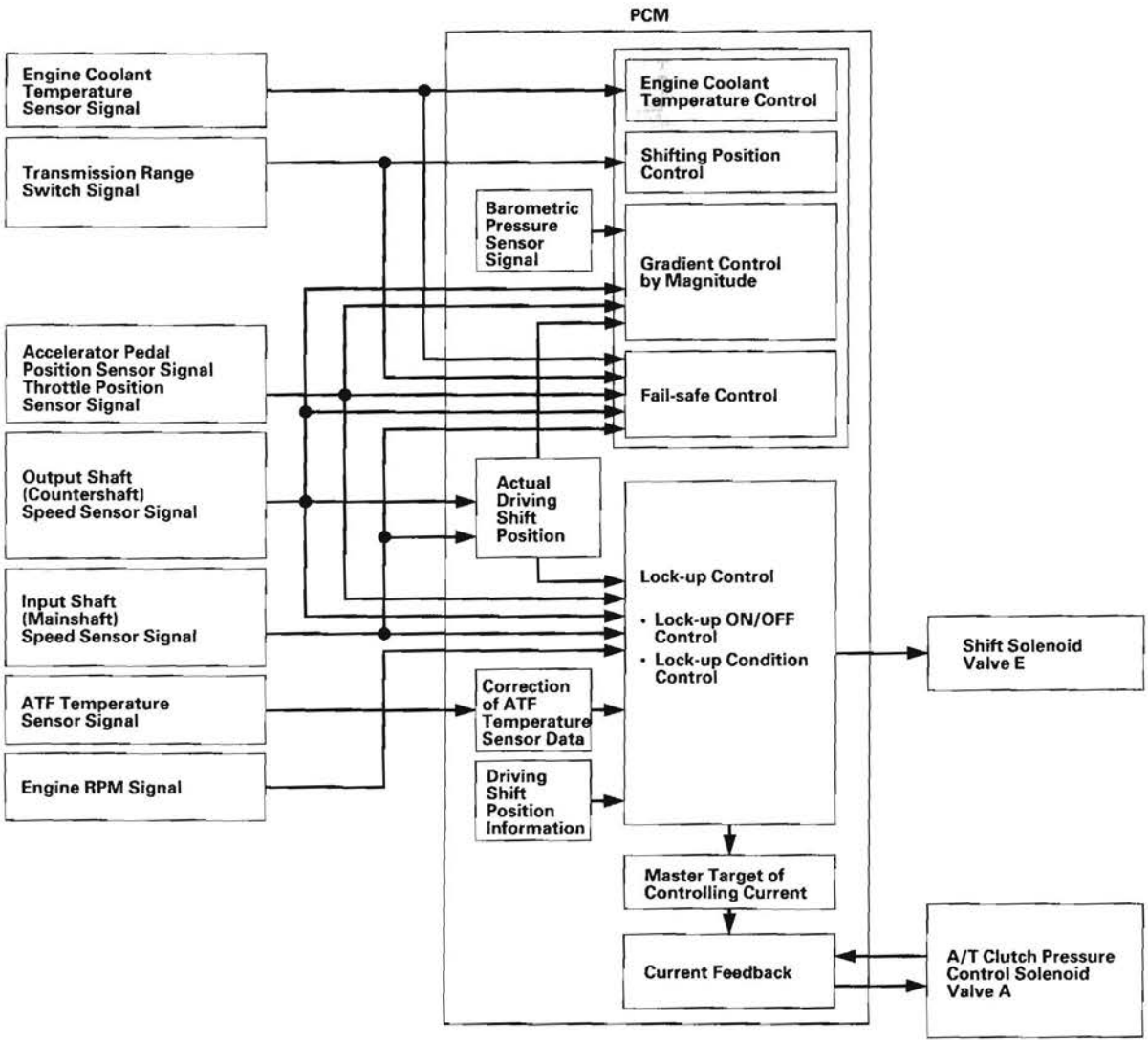

PCM A/T Control System Electrical Connections

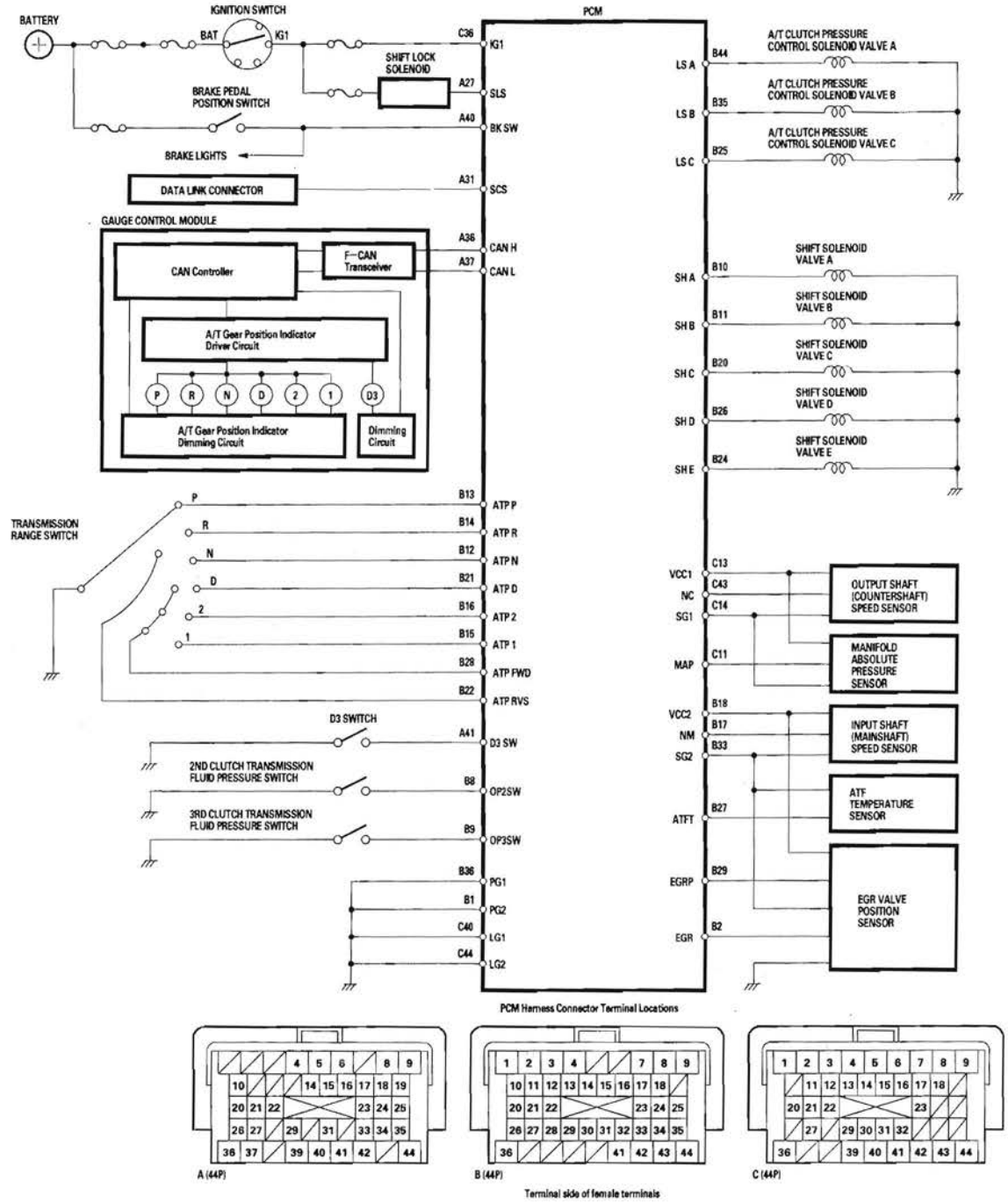

(cont'd)

System Description (cont'd)

Electronic Control System (cont'd)

PCM A/T Control System Inputs and Outputs

PCM Harness Connector Terminal Locations

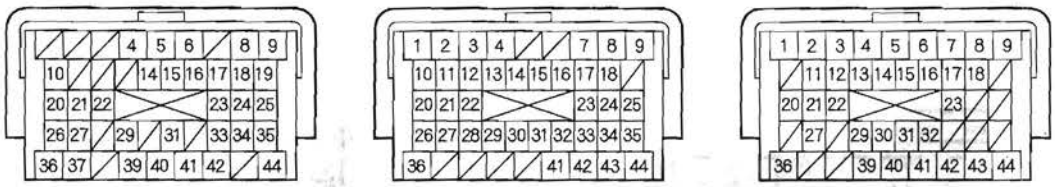

A (44P) **B (44P)** **C (44P)**

Terminal side of female terminals

PCM CONNECTOR A (44P)

Terminal number	Wire color	Terminal name	Description	Signal
A27	RED	SLS (SHIFT LOCK SOLENOID)	Drives shift lock solenoid	With ignition switch ON (II), in the P position, brake pedal pressed, and accelerator released: Battery voltage
A31	BRN	SCS (SERVICE CHECK SIGNAL)	Detects service check signal	With service check signal shorted with the HDS: About 0 V With service check signal opened: About 5.0 V
A36	WHT	CAN H (CAN COMMUNICATION SIGNAL HIGH)	Sends communication signal	With ignition switch ON (II): About 2.5 V (pulses)
A37	RED	CAN L (CAN COMMUNICATION SIGNAL LOW)	Sends communication signal	With ignition switch ON (II): About 2.5 V (pulses)
A40	LT GRN	BK SW (BRAKE PEDAL POSITION SWITCH)	Detects brake pedal position switch signal	With brake pedal released: About 0 V With brake pedal pressed: Battery voltage
A41	BLU	D3 SW (D3 SWITCH)	Detects D3 switch signal	With ignition switch ON (II): • With D3 switch ON: About 0 V • With D3 switch OFF: Battery voltage

PCM CONNECTOR B (44P)

Terminal number	Wire color	Terminal name	Description	Signal
B1	BLK	PG2 (PCM GROUND)	Ground circuit for PCM circuit	Less than 0.5 V at all times
B2	BLU/RED	EGR (EXHAUST GAS RECIRCULATION (EGR) VALVE)	Drives EGR valve	With EGR operating: Duty controlled With EGR not operating: About 0 V
B8	BLU/RED	OP2SW (2ND CLUTCH TRANSMISSION FLUID PRESSURE SWITCH)	Detects 2nd clutch transmission fluid pressure switch signal	With ignition switch ON (II): • Without 2nd clutch pressure: About 5.0 V • With 2nd clutch pressure: About 0 V
B9	BLU/WHT	OP3SW (3RD CLUTCH TRANSMISSION FLUID PRESSURE SWITCH)	Detects 3rd clutch transmission fluid pressure switch signal	With ignition switch ON (II): • Without 3rd clutch pressure: About 5.0 V • With 3rd clutch pressure: About 0 V
B10	BLU/BLK	SH A (SHIFT SOLENOID VALVE A)	Drives shift solenoid valve A	In the R position, and in 1st, 4th, and 5th gears in the D position: Battery voltage In the P and N positions, and in 2nd and 3rd gears in the D position: About 0 V

PCM CONNECTOR B (44P)

Terminal number	Wire color	Terminal name	Description	Signal
B11	GRN/WHT	SH B (SHIFT SOLENOID VLVE B)	Drives shift solenoid valve B	In the P, R, and N positions, and in 1st and 2nd gears in the D position: Battery voltage In 3rd, 4th, and 5th gears in the D position: About 0 V
B12	RED/BLK	ATP N (TRANSMISSION RANGE SWITCH N POSITION)	Detects transmission range switch N position signal	In the N position: About 0 V In any position other than N: About 5.0 V
B13	BLU/BLK	ATP P (TRANSMISSION RANGE SWITCH P POSITION)	Detects transmission range switch P position signal	In the P position: About 0 V In any position other than P: Battery voltage
B14	WHT	ATP R (TRANSMISSION RANGE SWITCH R POSITION)	Detects transmission range switch R position signal	In the R position: About 0 V In any position other than R: Battery voltage
B15	RED	ATP 1 (TRANSMISSION RANGE SWITCH 1)	Detects transmission range switch 1 signal input	In the 1 position: About 0 V In any position other than 1: Battery voltage
B16	GRN/RED	ATP 2 (TRANSMISSION RANGE SWITCH 2)	Detects transmission range switch 2 signal input	In the 2 position: About 0 V In any position other than 2: Battery voltage
B17	WHT/RED	NM (INPUT SHAFT (MAINSHAFT) SPEED SENSOR)	Detects input shaft (mainshaft) speed sensor signal	With ignition switch ON (II): About 0 V or about 5.0 V With engine running in N position: About 2.5 V
B18	YEL/BLU	VCC2 (SENSOR VOLTAGE)	Provides sensor voltage	With ignition switch ON (II): About 5.0 V With ignition switch OFF: About 0 V
B20	GRN	SH C (SHIFT SOLENOID VALVE C)	Drives shift solenoid valve C	In the N position, and in 1st, 3rd, and 5th gears in the D position: Battery voltage In the P and R positions, and in 2nd and 4th gears in the D position: About 0 V
B21	YEL/GRN	ATP D (TRANSMISSION RANGE SWITCH D POSITION)	Detects transmission range switch D position signal input	In the D position: About 0 V In any position other than D: Battery voltage
B22	RED/WHT	ATP RVS (TRANSMISSION RANGE SWITCH R POSITION)	Detects transmission range switch R position signal	In R position: About 0 V In any position other than R: Battery voltage
B24	YEL	SH E (SHIFT SOLENOID VALVE E)	Drives shift solenoid valve E	In the P and R positions: Battery voltage In the N position, and in 1st gear in the D position: About 0 V
B25	BLU/YEL	LS C (A/T CLUTCH PRESSURE CONTROL SOLENOID VALVE C)	Drives A/T clutch pressure control solenoid valve C	With ignition switch ON (II): Pulses
B26	GRN/RED	SH D (SHIFT SOLENOID VALVE D)	Drives shift solenoid valve D	In 2nd and 5th gears in the D position: Battery voltage In the P, R, and N positions, and in 1st, 3rd, and 4th gears in the D position: About 0 V
B27	RED/YEL	ATFT (ATF TEMPERATURE SENSOR)	Detects ATF temperature sensor signal	With ignition switch ON (II): About 0.2—4.0 V depending on ATF temperature With ignition switch OFF: About 0 V
B28	BLU/YEL	ATP FWD (TRANSMISSION RANGE SWITCH D, 2, AND 1)	Detects transmission range switch D, 2, and 1 signal input	In the D, 2, and 1 positions: About 0 V In any position other than D, 2, and 1: Battery voltage

(cont'd)

System Description (cont'd)

Electronic Control System (cont'd)

PCM A/T Control System Inputs and Outputs (cont'd)

PCM Harness Connector Terminal Locations

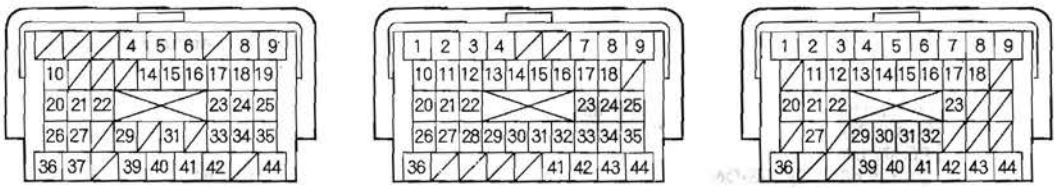

A (44P) **B (44P)** **C (44P)**

Terminal side of female terminals

PCM CONNECTOR B (44P)

Terminal number	Wire color	Terminal name	Description	Signal
B29	WHT/BLK	EGRP (EXHAUST GAS RECIRCULATION (EGR) VALVE POSITION SENSOR)	Detects EGR valve position sensor signal	With engine running: 1.2—3.0 V depending on EGR valve lift
B33	GRN/BLK	SG2 (SENSOR GROUND)	Sensor ground	Less than 0.5 V at all times
B35	BRN	LS B (A/T CLUTCH PRESSURE CONTROL SOLENOID VALVE B)	Drives A/T clutch pressure control solenoid valve B	With ignition switch ON (II): Pulses
B36	BLK	PG1 (PCM GROUND)	Ground circuit for PCM circuit	Less than 0.5 V at all times
B44	RED/BLK	LS A (A/T CLUTCH PRESSURE CONTROL SOLENOID VALVE A)	Drives A/T clutch pressure control solenoid valve A	With ignition switch ON (II): Pulses

PCM CONNECTOR C (44P)

Terminal number	Wire color	Terminal name	Description	Signal
C11	GRN/RED	MAP (MANIFOLD ABSOLUTE PRESSURE (MAP) SENSOR)	Detects MAP sensor signal	With ignition switch ON (II): About 3.0 V At idle: About 1.0 V depending on engine speed
C13	YEL/RED	VCC1 (SENSOR VOLTAGE)	Provides sensor voltage	With ignition switch ON (II): About 5.0 V With ignition switch OFF: About 0 V
C14	GRN/WHT	SG1 (SENSOR GROUND)	Sensor ground	Less than 0.5 V at all times
C36	BLK/RED	IG1 (IGNITION SIGNAL)	Detects ignition signal	With ignition switch ON (II): Battery voltage With ignition switch OFF: About 0 V
C40	BRN/YEL	LG1 (LOGIC GROUND)	Ground circuit for PCM circuit	Less than 0.5 V at all times
C43	BLK/WHT	NC (OUTPUT SHAFT (COUNTERSHAFT) SPEED SENSOR)	Detects output shaft (countershaft) speed sensor signal	With ignition switch ON (II): About 0 V or about 5.0 V With driving: Pulses
C44	BRN/YEL	LG2 (LOGIC GROUND)	Ground circuit for PCM	Less than 0.5 V at all times

Hydraulic Controls

Valve Bodies

The valve body includes the main valve body, the regulator valve body, and the servo body. The ATF pump is driven by splines on the left end of the torque converter which is attached to the engine. Fluid flows through the regulator valve to maintain specified pressure through the main valve body to the manual valve, directing pressure to the shift valves and to each of the clutches via the solenoid valves. The shift solenoid valves A, B, C, D, and E are bolted on the servo body. The A/T clutch pressure control solenoid valves A, B, and C are mounted on the outside of the transmission housing.

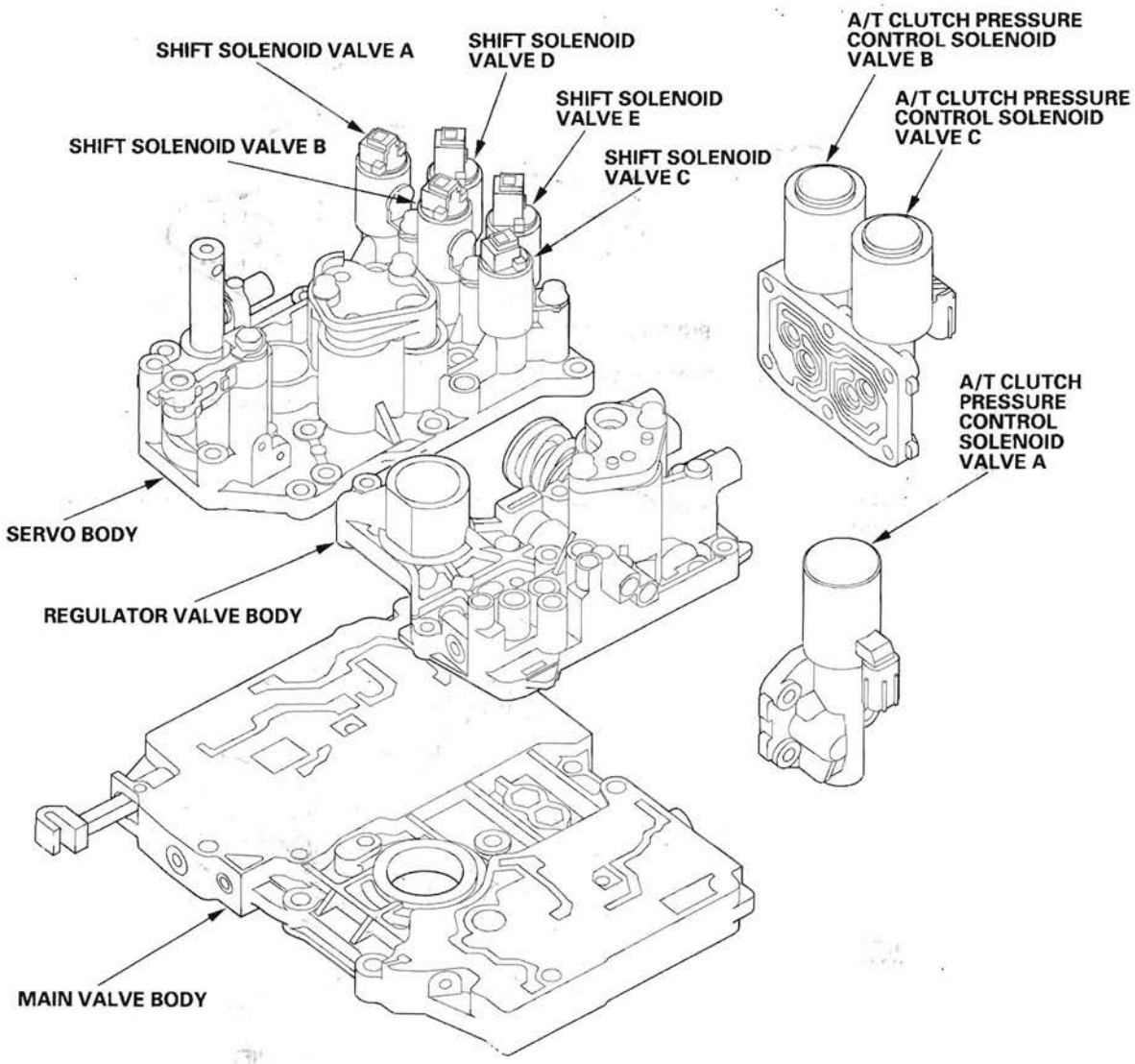

(cont'd)

System Description (cont'd)

Hydraulic Controls (cont'd)

Main Valve Body

The main valve body contains the manual valve, the shift valves A, B, C, and E, the relief valve, the lock-up control valve, the cooler check valve, the servo control valve, and the ATF pump gears. The primary function of the main valve body is to switch fluid pressure on and off and to control hydraulic pressure going to the hydraulic control system.

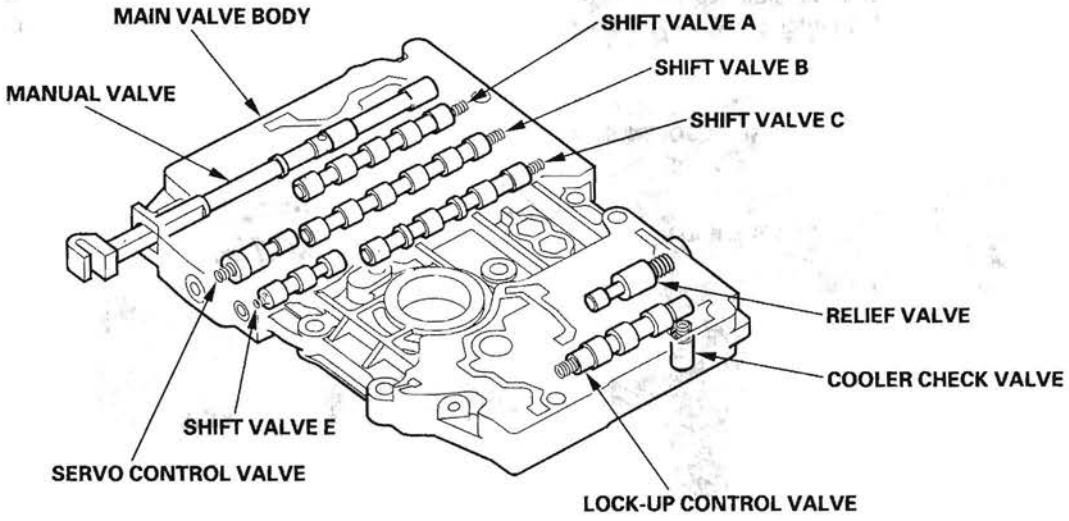

Regulator Valve Body

The regulator valve body contains the regulator valve, the torque converter check valve, the lock-up shift valve, and the 1st and 3rd accumulators.

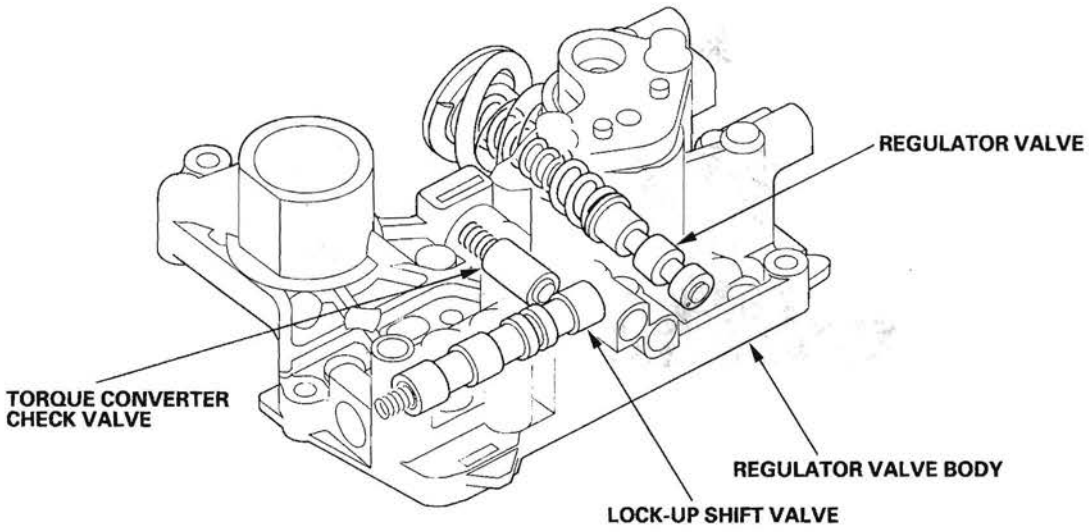

Regulator Valve

The regulator valve maintains a constant hydraulic pressure from the ATF pump to the hydraulic control system, while also furnishing fluid to the lubrication system and torque converter. Fluid from the ATF pump flows through B and C. Fluid entering from B flows through the valve orifice to the A cavity. This pressure of the A cavity pushes the regulator valve to the right side, and this movement of the regulator valve uncovers the fluid port to the torque converter and the relief valve. The fluid flows out to the torque converter and the relief valve, and the regulator valve returns under spring force. According to the level of the hydraulic pressure through B, the position of the regulator valve changes, and the amount of fluid from C through torque converter also changes. This operation is continued, maintaining the line pressure.

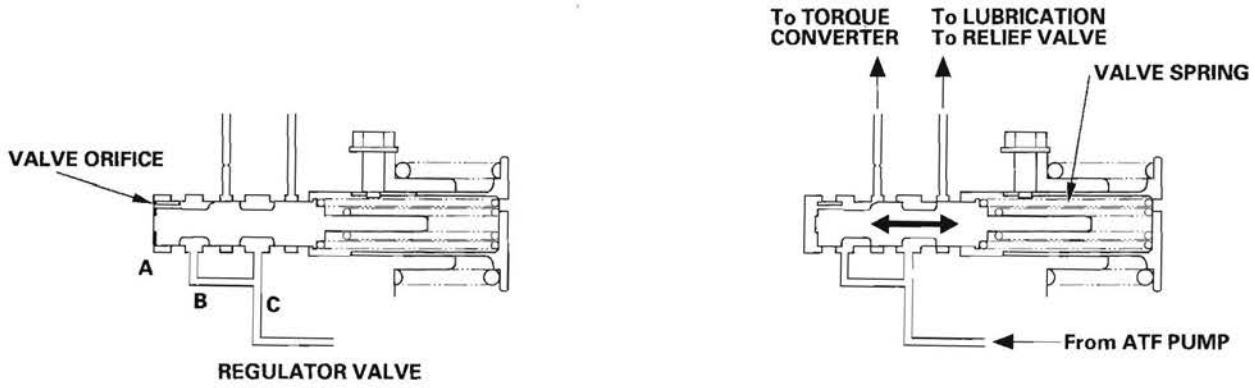

Increases in hydraulic pressure according to torque are performed by the regulator valve using stator torque reaction. The stator shaft is splined with the stator in the torque converter, and its arm end contacts the regulator spring cap. When the vehicle is accelerating or climbing (torque converter range), stator torque reaction acts on the stator shaft, and the stator arm pushes the regulator spring cap in the direction of the arrow in proportion to the reaction. The stator reaction spring compresses, and the regulator valve moves to increase the line pressure which is regulated by the regulator valve. The line pressure reaches its maximum when the stator torque reaction reaches its maximum.

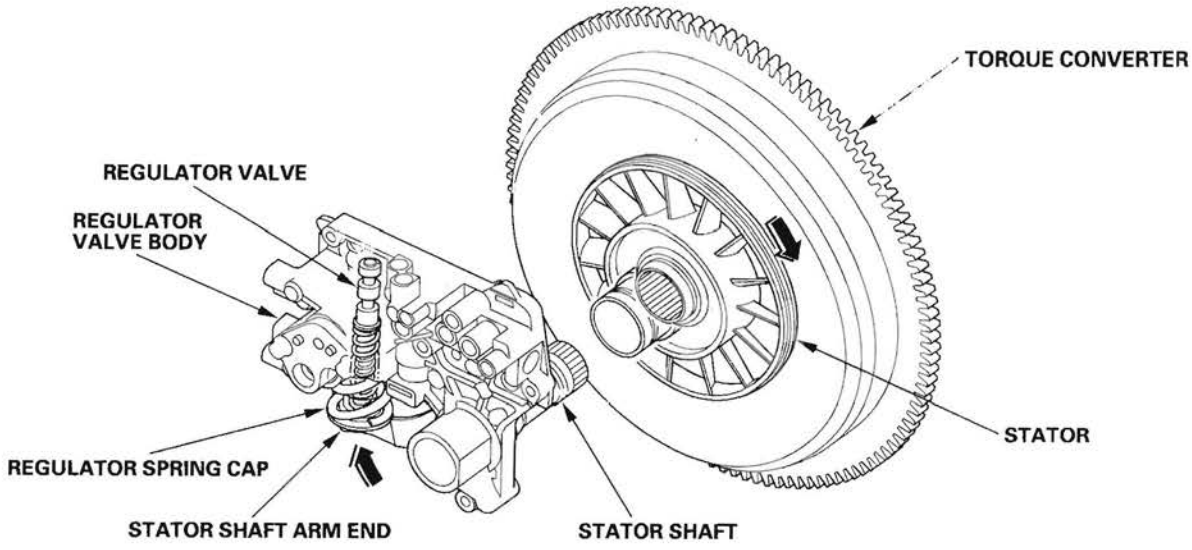

(cont'd)

System Description (cont'd)

Hydraulic Controls (cont'd)

Servo Body

The servo body contains the servo valve, the shift valve D, accumulators for 2nd, 4th, and 5th, and shift solenoid valves for A, B, C, D, and E.

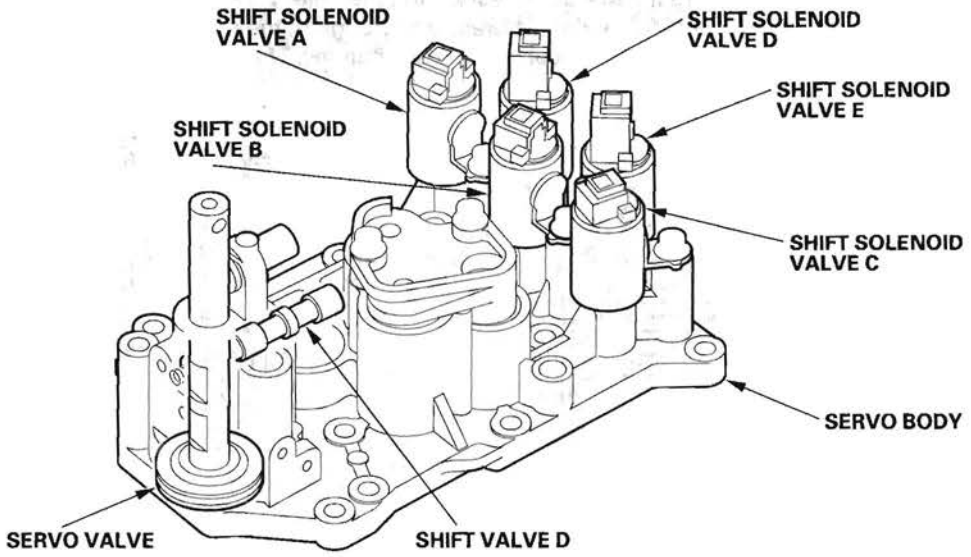

Accumulator

The accumulators are located in the regulator valve body and the servo body. The regulator valve body contains the 1st and 3rd accumulators, and the servo body contains the 2nd, 4th, and 5th accumulators.

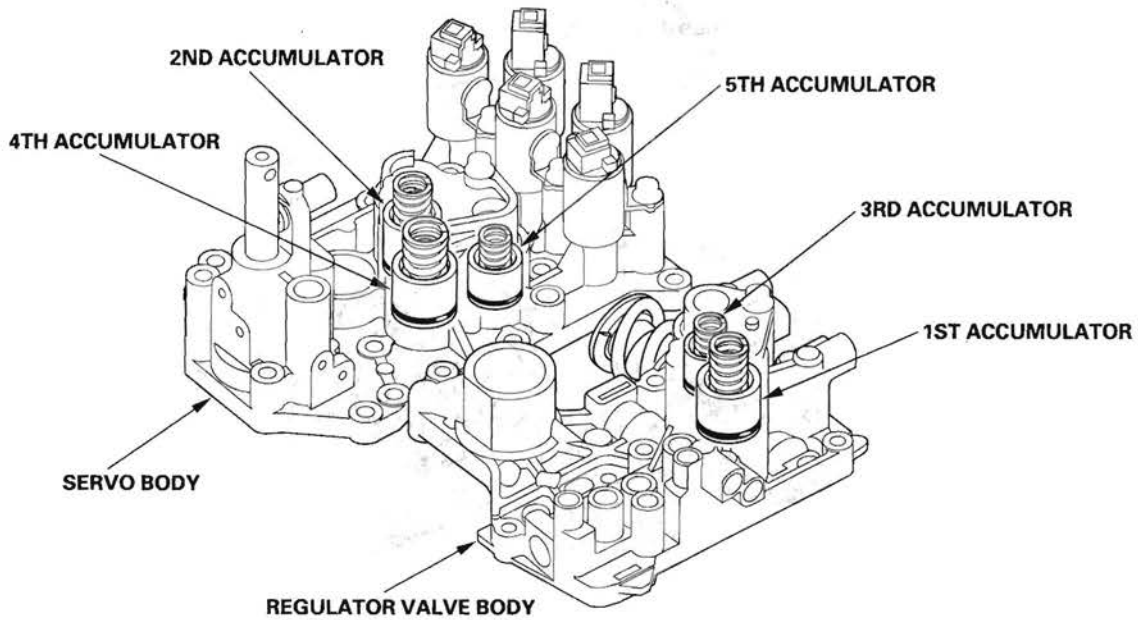

Hydraulic Flow

Distribution of Hydraulic Pressure

As the engine turns, the ATF pump starts to operate. Automatic transmission fluid (ATF) is drawn through the ATF strainer (filter) and discharged into the hydraulic circuit. Then, ATF flowing from the ATF pump becomes line pressure that is regulated by the regulator valve. Torque converter pressure from the regulator valve enters the torque converter through the lock-up shift valve, and it is discharged from the torque converter. The torque converter check valve prevents torque converter pressure from rising.

The PCM controls the shift solenoid valves ON and OFF. The shift solenoid valve intercepts line pressure from the ATF pump via the manual valve when the shift solenoid valve is OFF. When the shift solenoid valve is turned ON by the PCM, line pressure changes to shift solenoid valve pressure at the shift solenoid valve, then the solenoid valve pressure flows to the shift valve. Applying shift solenoid pressure to the shift valves moves the position of the shift valve, and switches the port of the hydraulic circuit. The PCM also controls A/T clutch pressure control solenoid valves A, B, and C. The A/T clutch pressure control solenoid valves regulate hydraulic pressure, and apply the pressure to the clutches to engage smoothly. The clutches receive optimum clutch pressure which is regulated by the A/T clutch pressure control solenoid valves for comfortable driving and shifting under all conditions.

Hydraulic Pressure at the Port for use in the hydraulic circuit

Port No.	Hydraulic Pressure	Port No.	Hydraulic Pressure
1	Line	SB	Shift solenoid valve B
3	Line	SC	Shift solenoid valve C
3'	Line	SD	Shift solenoid valve D
4	Line	SE	Shift solenoid valve E
4'	Line	10	1st clutch
4''	Line	20	2nd clutch
7	Line	30	3rd clutch
1A	Line or A/T clutch pressure control solenoid valve A	40	4th clutch
1B	Line	50	5th clutch
3A	Line	55	A/T clutch pressure control solenoid valve A
3B	Line	55'	A/T clutch pressure control solenoid valve A
3C	Line	56	A/T clutch pressure control solenoid valve B
5A	Line	57	A/T clutch pressure control solenoid valve C
5B	Line	90	Torque converter
5C	Line	91	Torque converter
5D	Line	92	Torque converter
5E	Line or A/T clutch pressure control solenoid valve B	93	ATF cooler
5F	Line or A/T clutch pressure control solenoid valve A or B	94	Torque converter
5G	A/T clutch pressure control solenoid valve B	95	Lubrication
5H	A/T clutch pressure control solenoid valve C	96	Torque converter
5J	A/T clutch pressure control solenoid valve C	97	Torque converter
5K	A/T clutch pressure control solenoid valve C	99	Suction
5L	A/T clutch pressure control solenoid valve C	X	Drain
5N	A/T clutch pressure control solenoid valve C	HX	High position drain
SA	Shift solenoid valve A	AX	Air drain

(cont'd)

System Description (cont'd)

Hydraulic Flow (cont'd)

N Position

The PCM controls the shift solenoid valves. The conditions of the shift solenoid valves and positions of the shift valves are as follows:

- Shift solenoid valve A: OFF, and shift valve A stays on the right side
- Shift solenoid valve B: ON, and shift valve B moves to the left side
- Shift solenoid valve C: ON, and shift valve C moves to the left side
- Shift solenoid valve D: OFF, and shift valve D stays on the left side
- Shift solenoid valve E: OFF, and shift valve E stays on the left side

Line pressure (1) flows to the shift solenoid valves and the A/T clutch pressure control solenoid valve A. Under this condition, hydraulic pressure is not applied to the clutches.

NOTE: When used, "left" or "right" indicates direction on the hydraulic circuit.

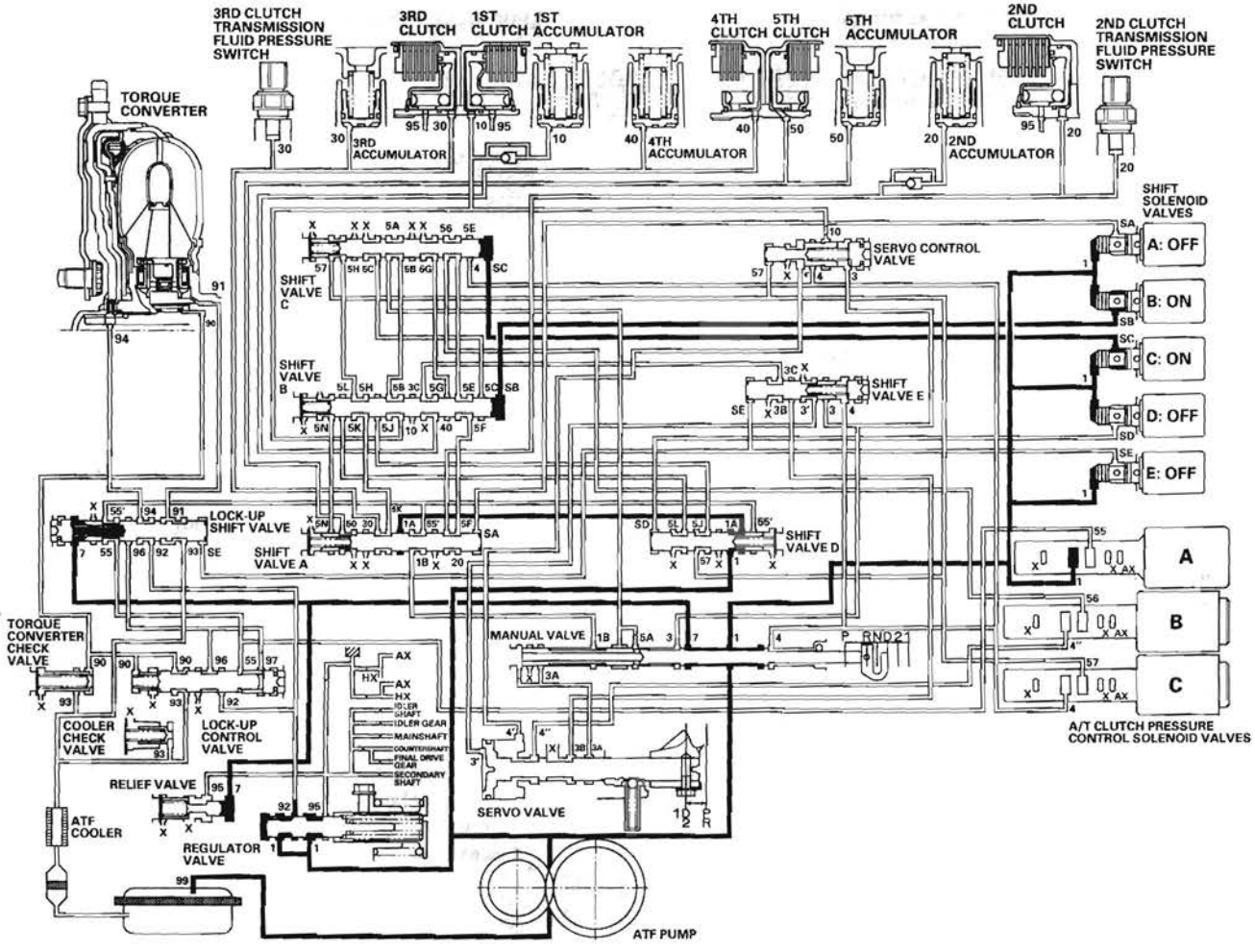

D Position: 1st gear shifting from N position

Shift solenoid valves remain the same as in the N position when shifting to the D position from N. The manual valve is moved to the D position, and switches the port of line pressure (4) leading to the A/T clutch pressure control solenoid valve C. Hydraulic pressure to the 1st clutch from the A/T clutch pressure control solenoid valve A is created as shift solenoid valve A is OFF, B and C remain ON. A/T clutch pressure control solenoid valve A pressure (55) changes to 1st clutch pressure (10) at the shift valve B, and flows to the 1st clutch. The 1st clutch is engaged gently when shifting to the D position from N.

NOTE: When used, "left" or "right" indicates direction on the hydraulic circuit.

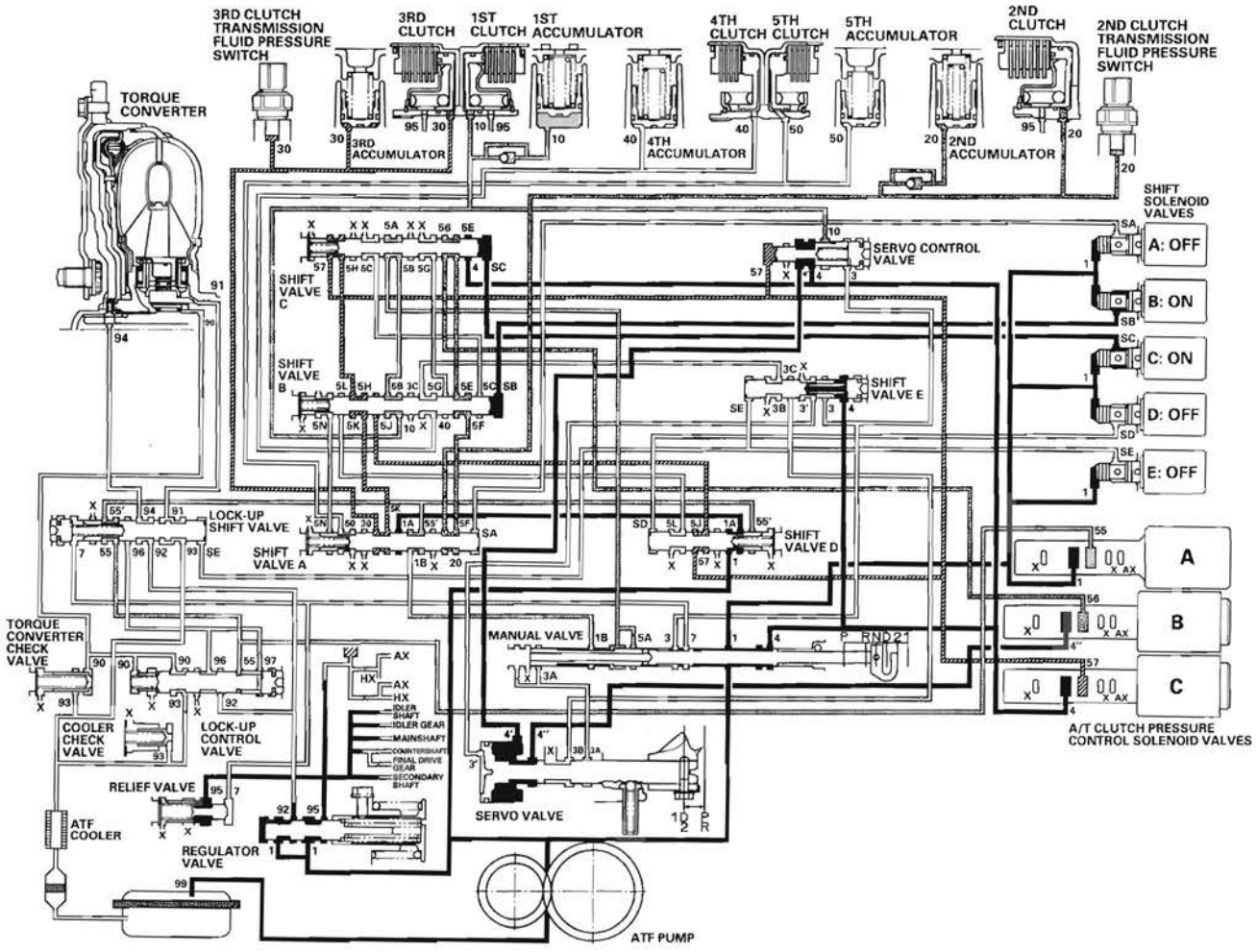

(cont'd)

System Description (cont'd)

Hydraulic Flow (cont'd)

D Position: Driving in 1st gear
The PCM turns shift solenoid valve A ON, and keeps B and C ON, and D and E OFF. Shift solenoid valve A pressure (SA) is applied to the right side of the shift valve A. Shift valve A is moved to the left side to uncover the line pressure port leading to the 1st clutch, and to cover the A/T clutch pressure control solenoid valve pressure port.

Fluid flows to the 1st clutch by way of:
Line pressure (1) → Shift valve D—Line pressure (1A) → Shift valve A—Line pressure (1B) → Manual valve—Line pressure (5A) → Shift valve C—Line pressure (5B) → Shift valve B—1st clutch pressure (10) → 1st clutch

The 1st clutch pressure (10) is applied to the 1st clutch, and the 1st clutch is engaged securely.

NOTE: When used, "left" or "right" indicates direction on the hydraulic circuit.

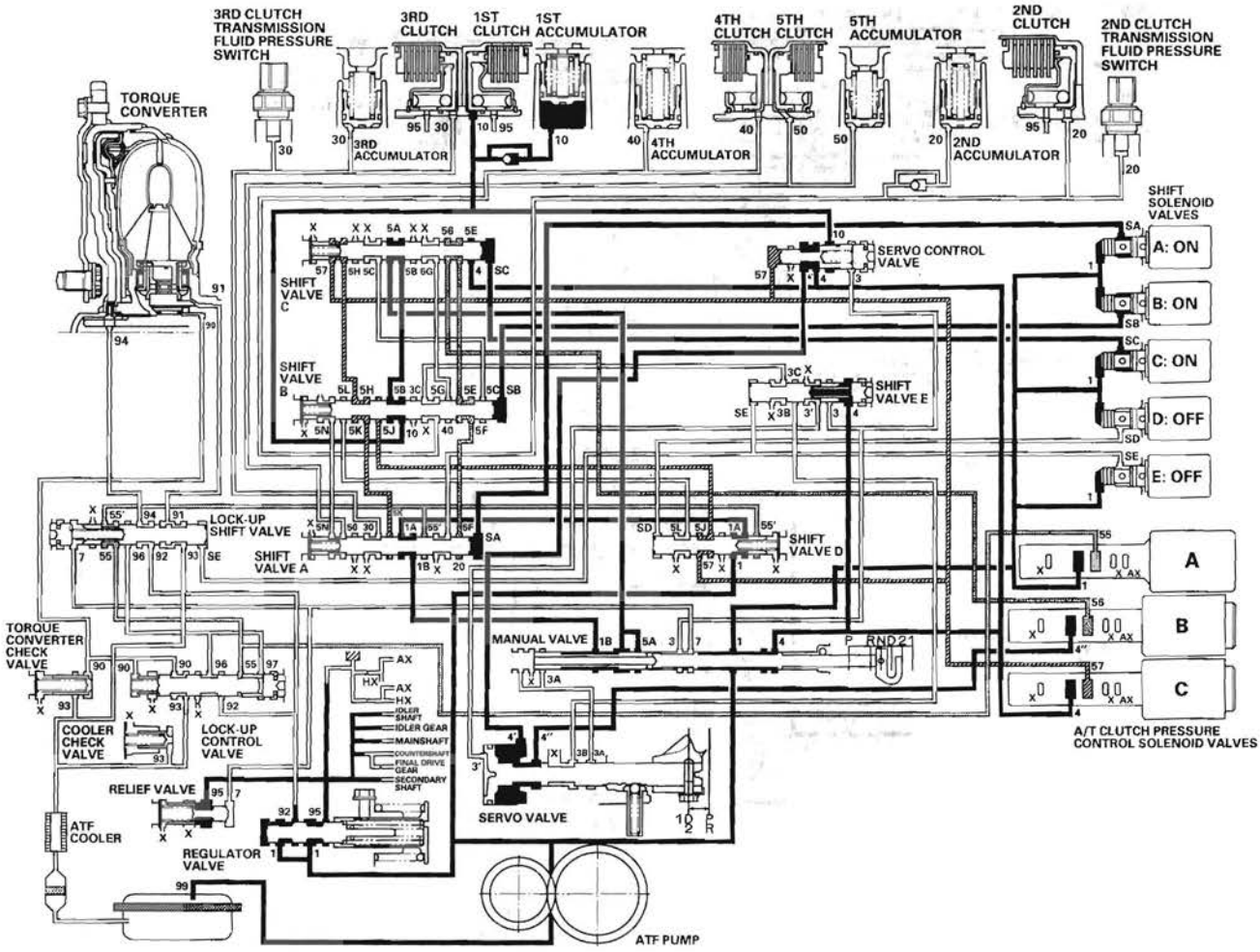

D Position: Shifting between 1st gear and 2nd gear

As the speed of the vehicle reaches the programmed value, the PCM turns shift solenoid valve A OFF, and keeps B and C ON, and D and E OFF. Shift solenoid valve A pressure (SA) in the right side of shift valve A is released. Shift valve A is moved to the right side to uncover the A/T clutch pressure control solenoid valve pressure port leading to the 1st and 2nd clutches. The PCM controls the A/T clutch pressure control solenoid valves to regulate hydraulic pressure. A/T clutch pressure control solenoid valve A pressure (55) changes to 1st clutch pressure (10) at shift valve B, and A/T clutch pressure control solenoid valve B pressure (56) changes to 2nd clutch pressure (20) at shift valve A. The 1st and 2nd clutches are engaged gently.

NOTE: When used, "left" or "right" indicates direction on the hydraulic circuit.

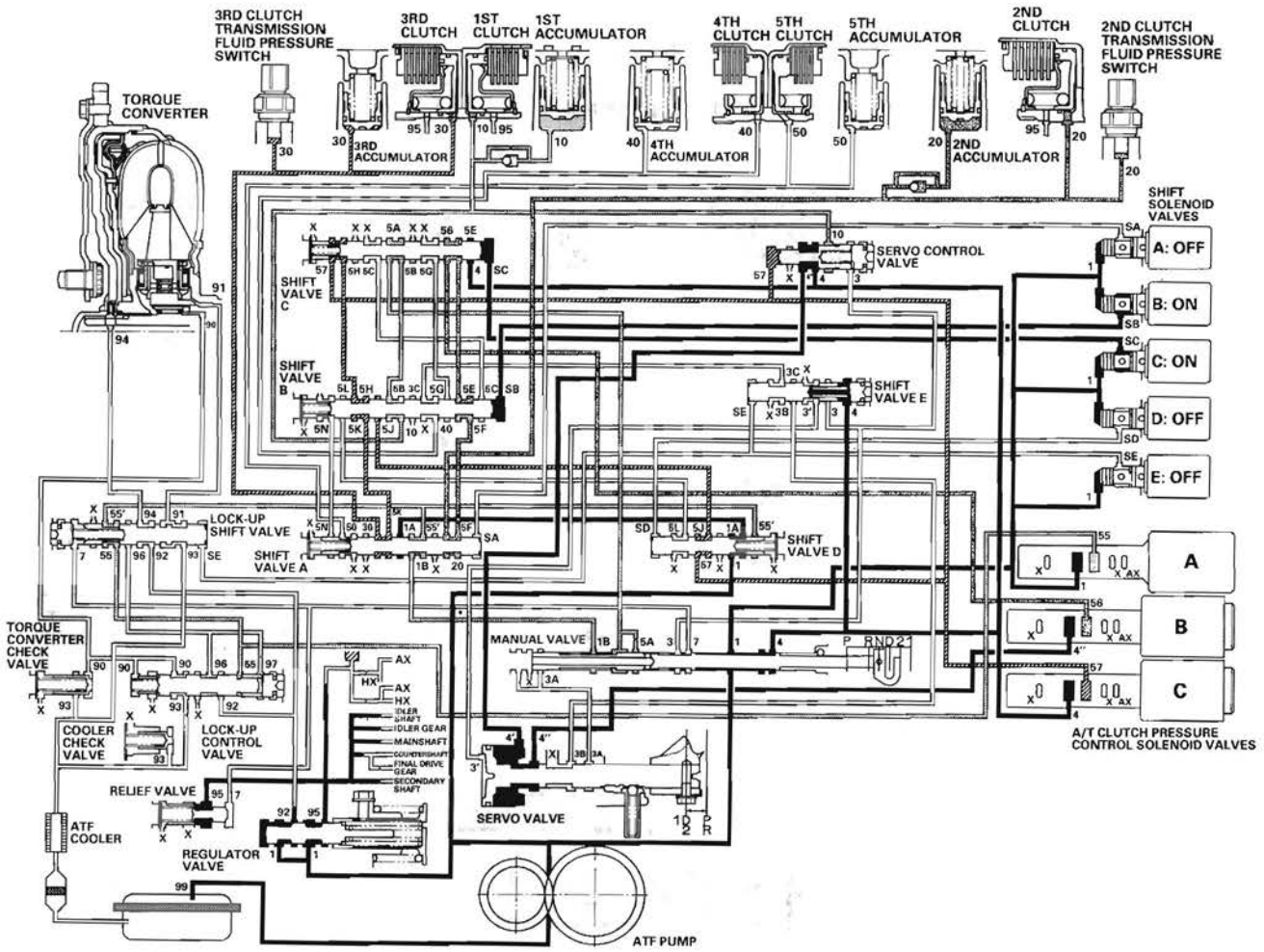

(cont'd)

System Description (cont'd)

Hydraulic Flow (cont'd)

D Position: Driving in 2nd gear

The PCM turns shift solenoid valves C OFF, D ON, and keeps A and E OFF, and B ON. Shift solenoid valve C pressure (SC) in the right side of the shift valve C is released. Shift valve C is moved to the right side to switch the ports. This movement covers the A/T clutch pressure control solenoid valve pressure ports to stop at shift valves C and A, and uncover the line pressure port leading to the 2nd clutch.

Fluid flows to 2nd clutch by way of:
Line pressure (1) → Manual valve—Line pressure (4) → Shift valve C—Line pressure (5E) → Shift valve B—Line pressure (5F) → Shift valve A—2nd clutch pressure (20) → 2nd clutch

The 2nd clutch pressure (20) is applied to the 2nd clutch, and the 2nd clutch is engaged securely.

NOTE: When used, "left" or "right" indicates direction on the hydraulic circuit.

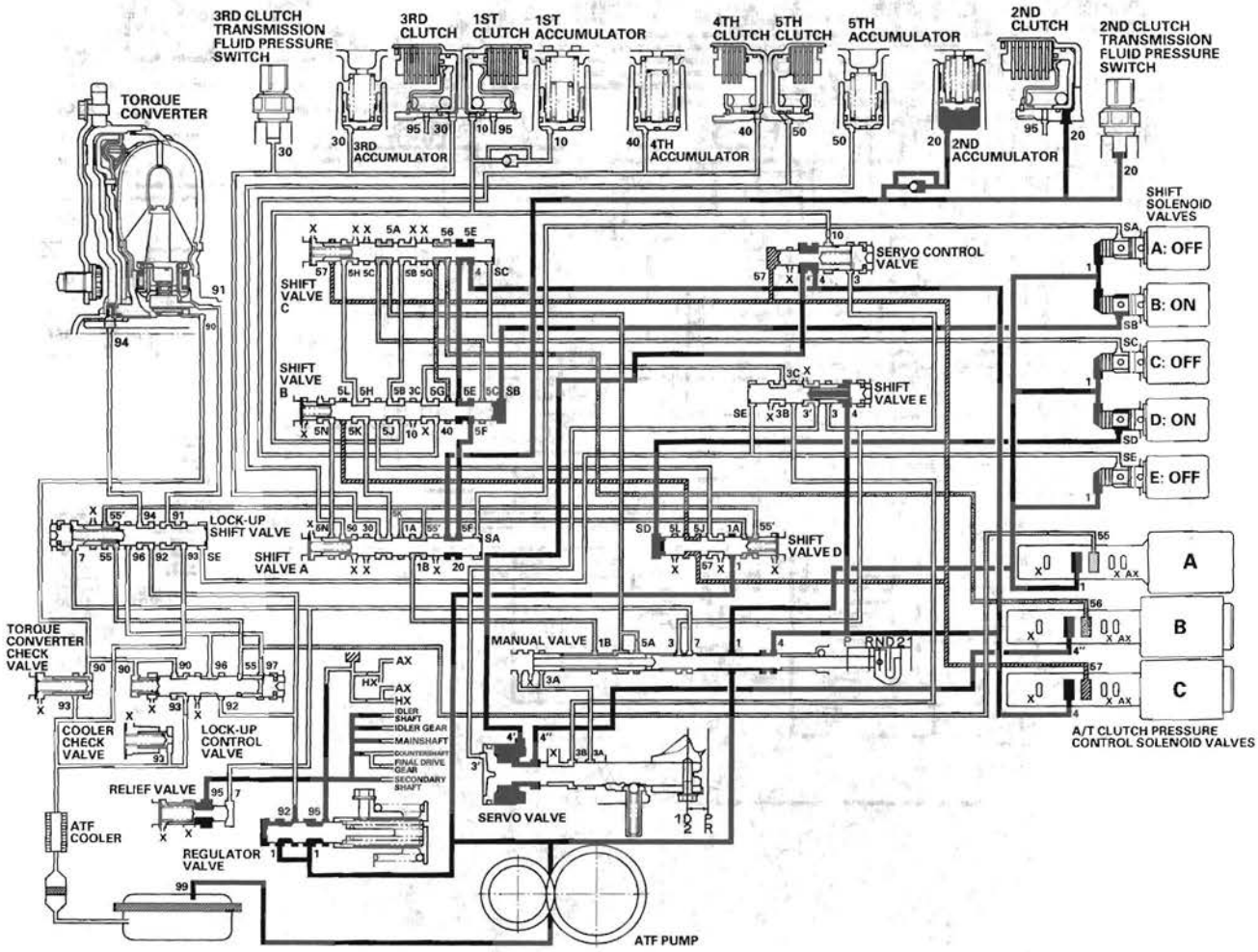

D Position: Shifting between 2nd gear and 3rd gear

As the speed of the vehicle reaches the programmed value, the PCM turns shift solenoid valves C ON, and keeps A and E OFF, and B and D ON. Shift solenoid valve C pressure (SC) is applied to the right side of the shift valve C. Shift valve C is moved to the left side to uncover the A/T clutch pressure control solenoid valve pressure ports leading to the 2nd and 3rd clutches. The PCM controls the A/T clutch pressure control solenoid valves to regulate hydraulic pressure. A/T clutch pressure control solenoid valve B pressure (56) changes to 2nd clutch pressure (20) at shift valve A, and A/T clutch pressure control solenoid valve C pressure (57) changes to 3rd clutch pressure (30) at shift valve A. The 2nd and 3rd clutches are engaged gently.

NOTE: When used, "left" or "right" indicates direction on the hydraulic circuit.

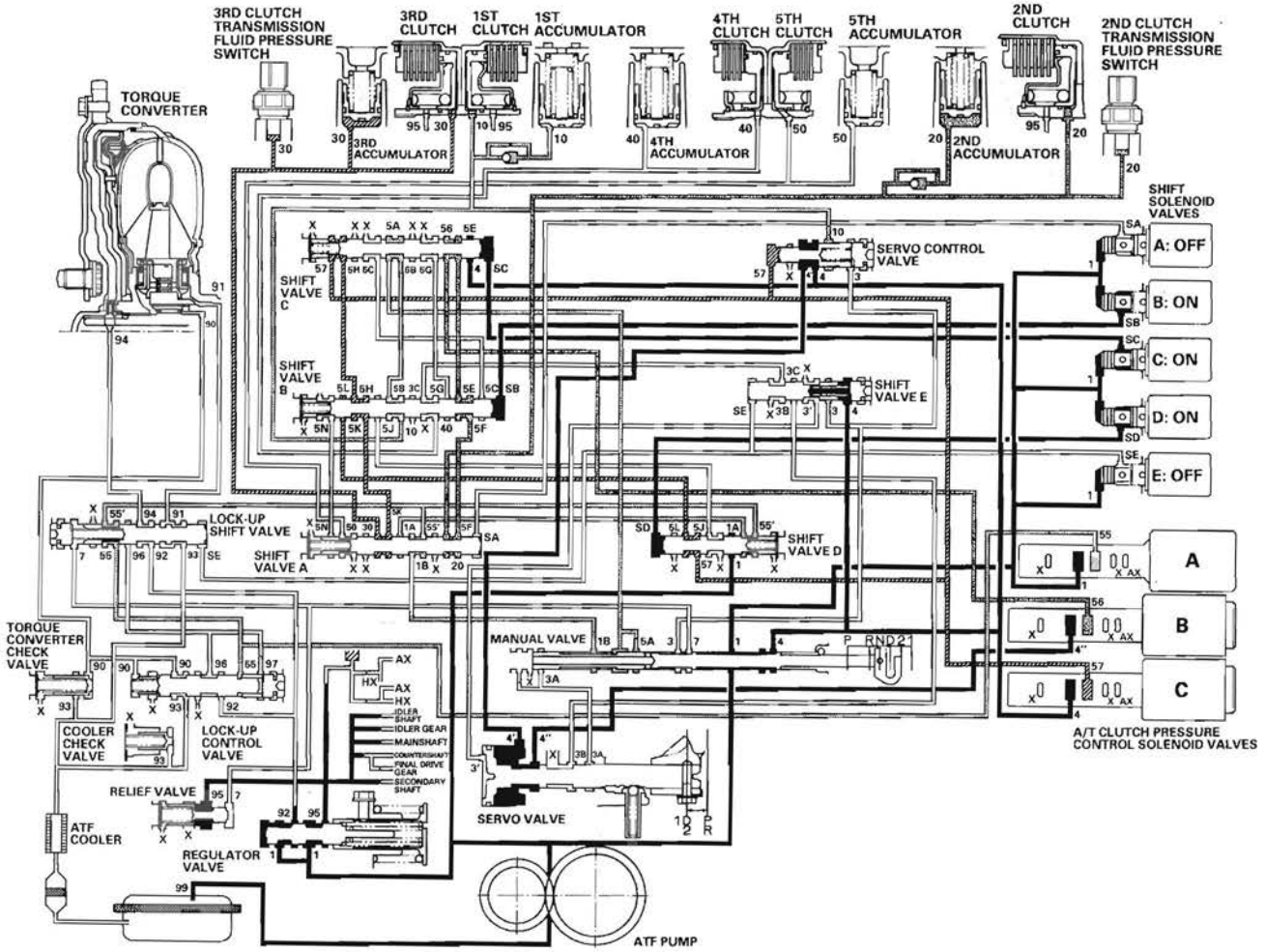

(cont'd)

System Description (cont'd)

Hydraulic Flow (cont'd)

D Position: Driving in 3rd gear

The PCM turns shift solenoid valves B and D OFF, and keeps A and E OFF, and C ON. Shift solenoid valve B pressure (SB) in the right side of shift valve B is released, and shift valve B is moved to the right side. Shift solenoid valve D pressure (SD) in the left side of the shift valve D is released, and shift valve D is moved to the left side. This valve movement switches the A/T clutch pressure control solenoid valve C pressure port leading to the 3rd clutch.
A/T clutch pressure control solenoid valve C pressure (57) changes to (5J) at shift solenoid valve D and to (5K) at shift valve B, and becomes 3rd clutch pressure (30) at shift valve A. The 3rd clutch pressure (30) is applied to the 3rd clutch, and the 3rd clutch is engaged securely.

NOTE: When used, "left" or "right" indicates direction on the hydraulic circuit.

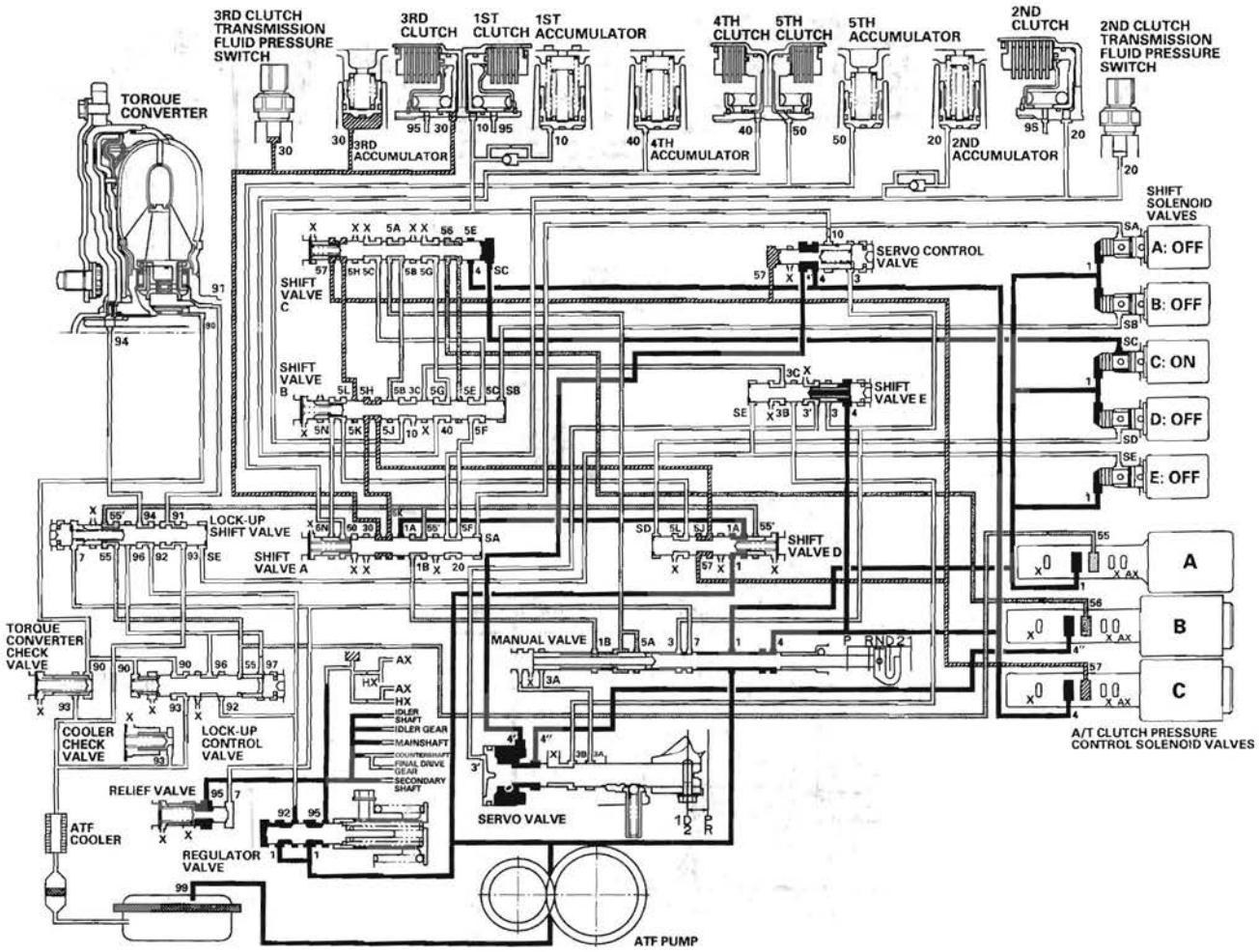

D Position: Shifting between 3rd gear and 4th gear

As the speed of the vehicle reaches the programmed value, the PCM turns shift solenoid valves C OFF, and keeps A, B, D, and E OFF. Shift solenoid valve C pressure (SC) in the right side of shift valve C is released. Shift valve C is moved to the right side to uncover the A/T clutch pressure control solenoid valve B and C pressure ports leading to the 3rd and 4th clutches. The PCM controls the A/T clutch pressure control solenoid valves to regulate hydraulic pressure. A/T clutch pressure control solenoid valve C pressure (57) changes to 3rd clutch pressure (30) at shift valve A, and A/T clutch pressure control solenoid valve B pressure (56) changes to 4th clutch pressure (40) at shift valve B. The 3rd and 4th clutches are engaged gently.

NOTE: When used, "left" or "right" indicates direction on the hydraulic circuit.

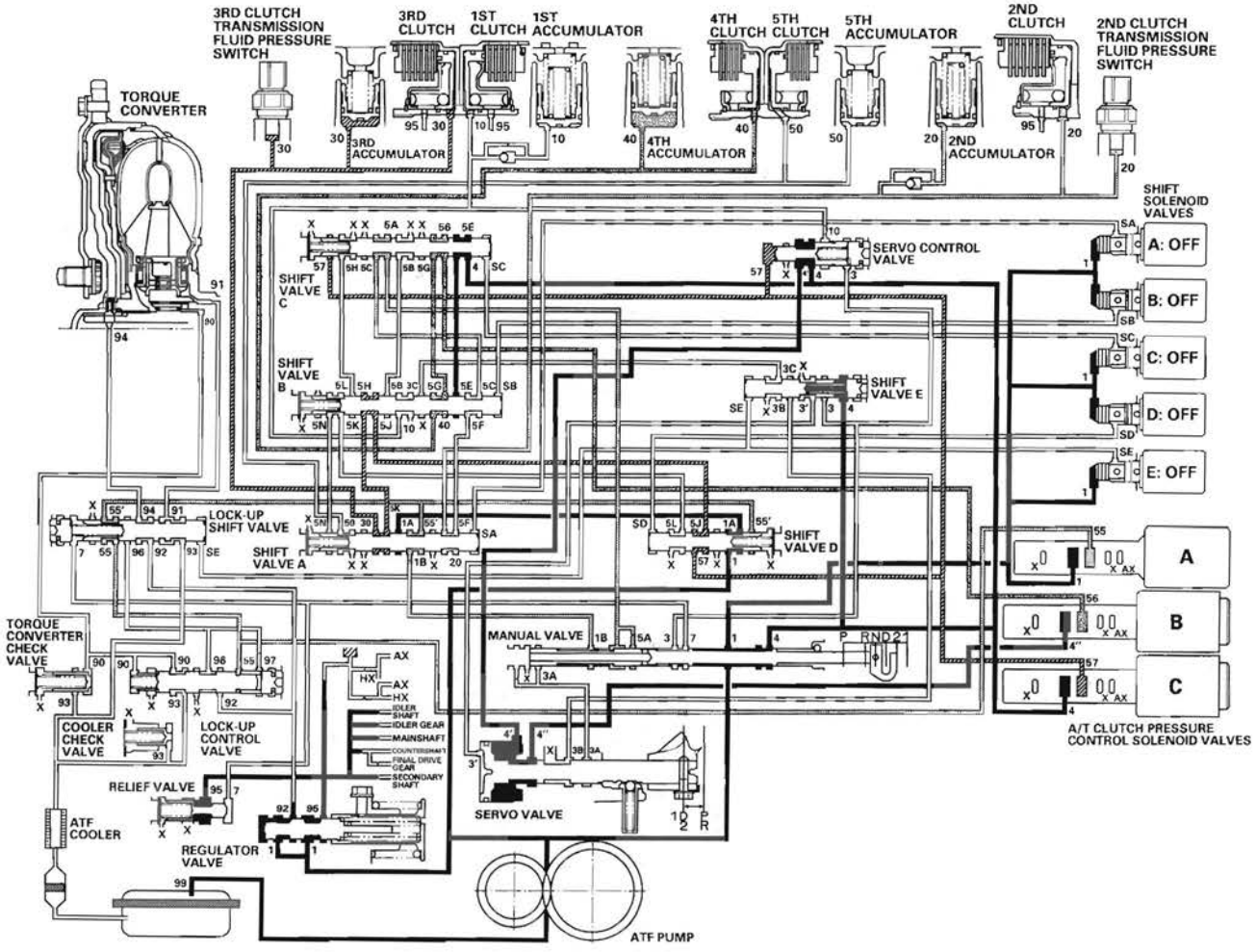

(cont'd)

System Description (cont'd)

Hydraulic Flow (cont'd)

D Position: Driving in 4th gear

The PCM turns shift solenoid valve A ON, and keeps B, C, D, and E OFF. Shift solenoid valve A pressure (SA) is applied to the right side of shift valve A. Shift valve A is moved to the left side to cover the A/T clutch pressure control solenoid valve A and C pressure ports leading to the 2nd and 3rd clutches.

A/T clutch pressure control solenoid valve B pressure (56) changes to (5G) at shift valve C, and becomes 4th clutch pressure (40) at shift valve B. The 4th clutch pressure (40) is held to high by the A/T clutch pressure control solenoid valve B, and the 4th clutch is engaged securely.

NOTE: When used, "left" or "right" indicates direction on the hydraulic circuit.

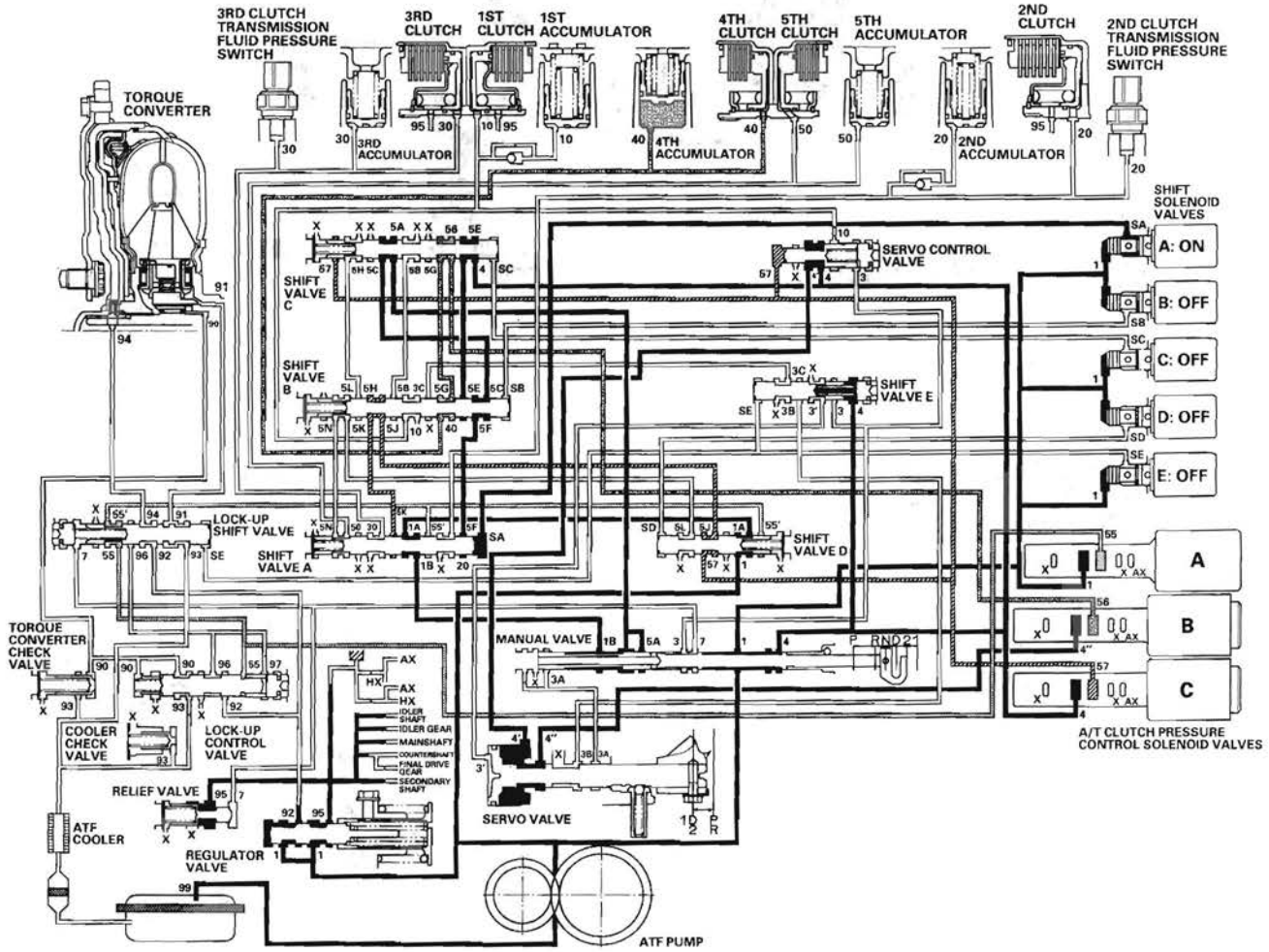

D Position: Shifting between 4th gear and 5th gear

As the speed of the vehicle reaches the programmed value, the PCM turns shift solenoid valve D ON, and keeps A ON, and B, C, and E OFF. Shift solenoid valve D pressure (SD) is applied to the left side of the shift valve D. Shift valve D is moved to the right side to uncover the A/T clutch pressure control solenoid valve C pressure port leading to the 5th clutch. A/T clutch pressure control solenoid valve B pressure (56) changes to 4th clutch pressure (40) at shift valve B. A/T clutch pressure control solenoid valve C pressure (57) changes to (5L) at shift valve D and to (5N) at shift valve B, and becomes 5th clutch pressure (50) at shift valve A. The 4th and 5th clutches are engaged gently.

NOTE: When used, "left" or "right" indicates direction on the hydraulic circuit.

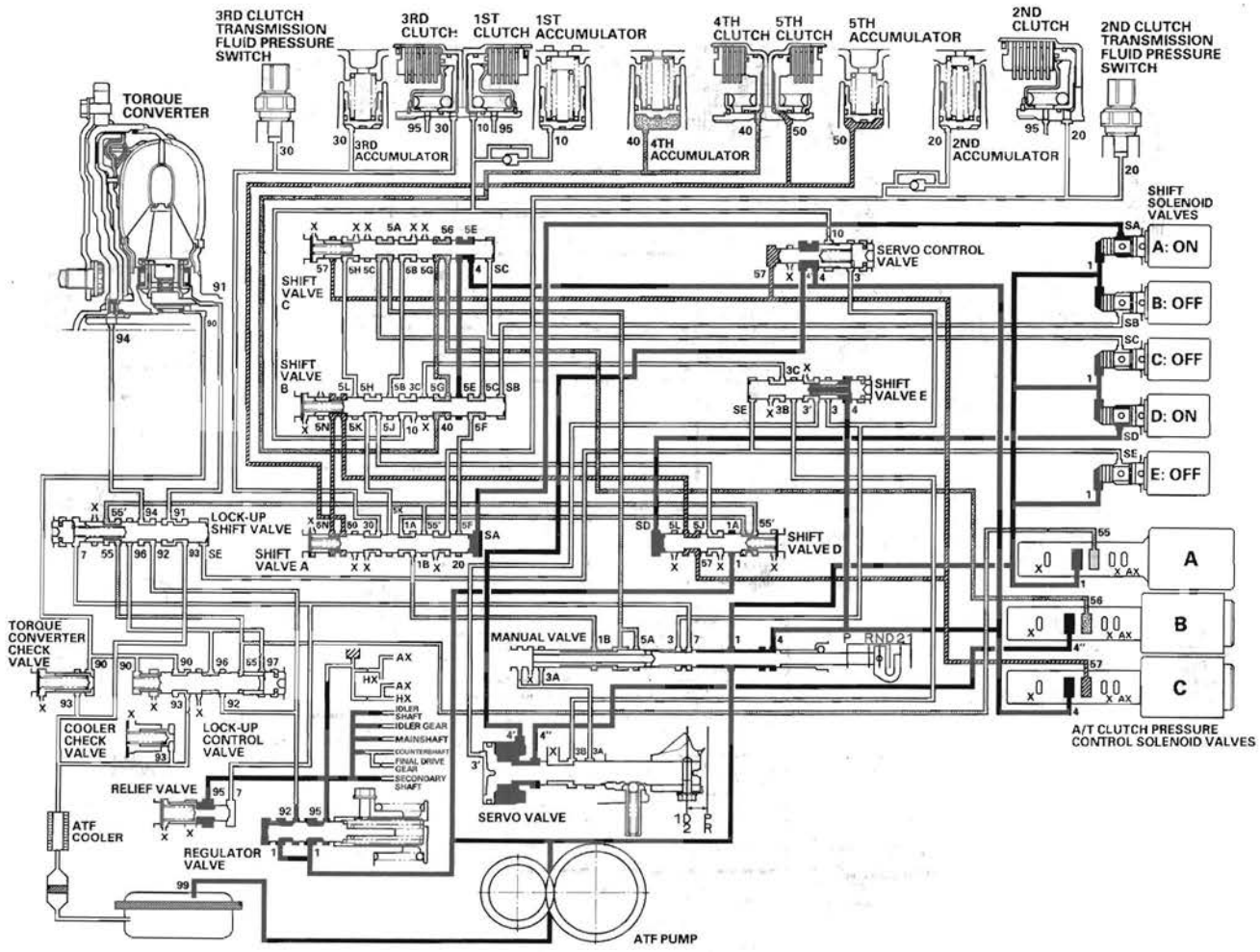

(cont'd)

System Description (cont'd)

Hydraulic Flow (cont'd)

D Position: Driving in 5th gear

The PCM turns shift solenoid valve C ON, and keeps A and D ON, and B and E turned OFF. Shift solenoid valve C pressure (SC) is applied to the right side of shift valve C. Shift valve C is moved to the left side to switch the A/T clutch pressure control solenoid valve B pressure port leading to the 4th clutch.

The 5th clutch pressure (50) is held to high by the A/T clutch pressure control solenoid valve C, and the 5th clutch is engaged securely.

NOTE: When used, "left" or "right" indicates direction on the hydraulic circuit.

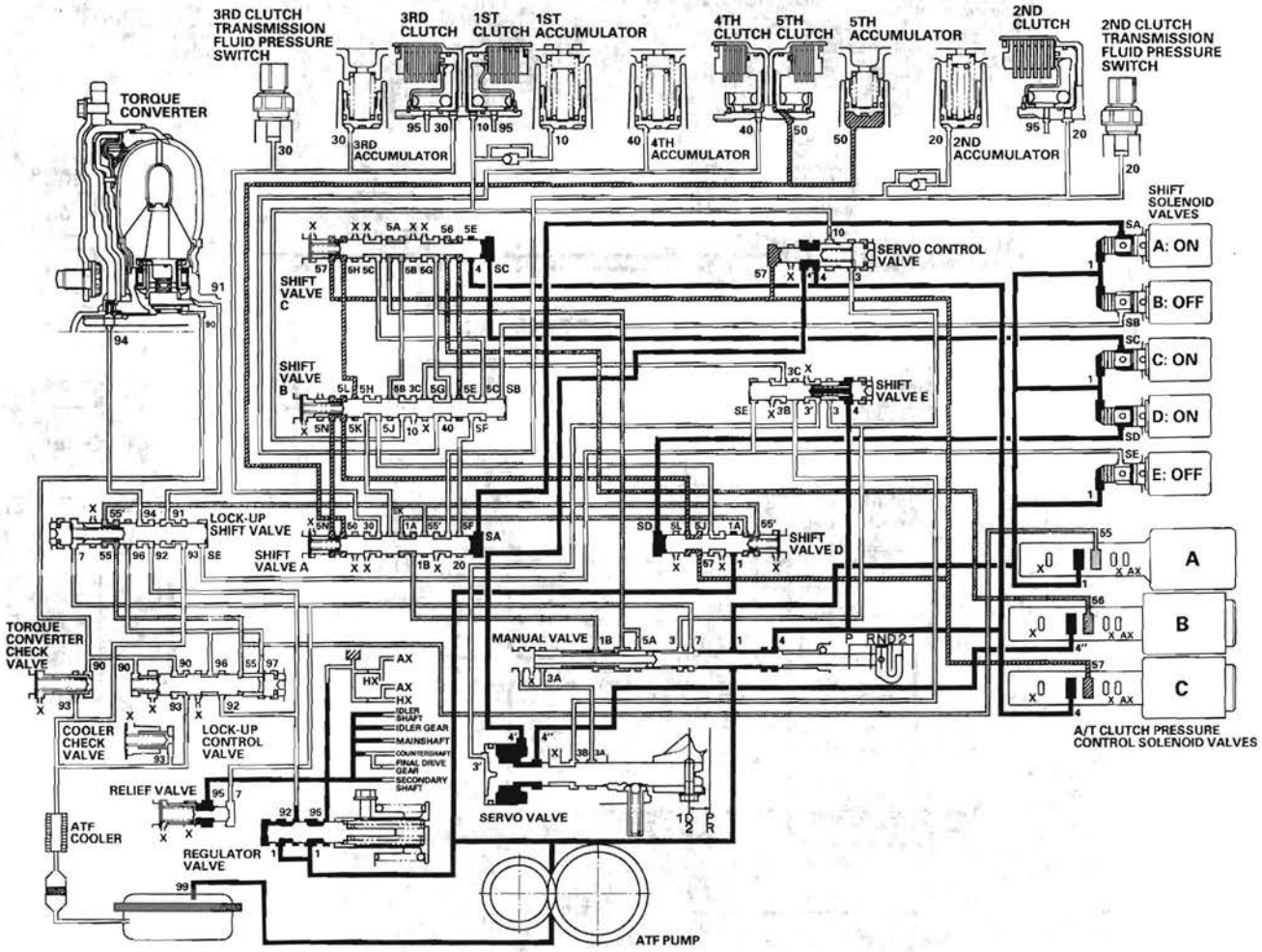

2 Position

The PCM controls the shift solenoid valves. The conditions of the shift solenoid valves and positions of the shift valves are as follows:

- Shift solenoid valve A: OFF, and shift valve A stays on the right side
- Shift solenoid valve B: ON, and shift valve B moves to the left side
- Shift solenoid valve C: OFF, and shift valve C stays on the right side
- Shift solenoid valve D: ON, and shift valve D moves to the right side
- Shift solenoid valve E: OFF, and shift valve E stays on the left side

Line pressure (1) changes to line pressure (4) at the manual valve, and flows to shift valve C. Line pressure (4) flows to shift valve A via shift valve B, and becomes the 2nd clutch pressure (20). The 2nd clutch pressure (20) is applied to the 2nd clutch, and the 2nd clutch is engaged.

NOTE: When used, "left" or "right" indicates direction on the hydraulic circuit.

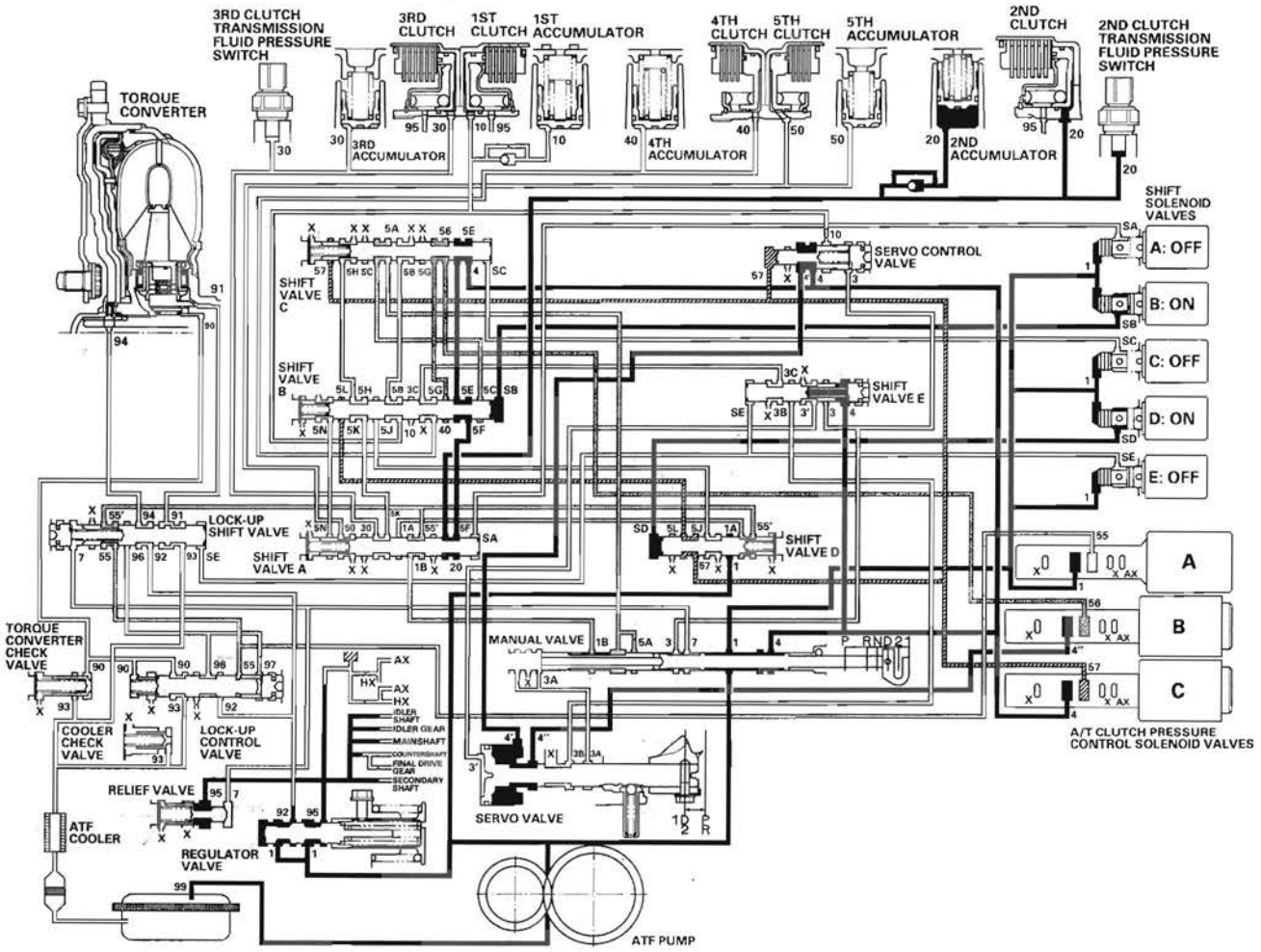

(cont'd)

System Description (cont'd)

Hydraulic Flow (cont'd)

1 Position

The PCM controls the shift solenoid valves. The conditions of the shift solenoid valves and positions of the shift valves are as follows:

- Shift solenoid valve A: ON, and shift valve A moves to the left side
- Shift solenoid valve B: ON, and shift valve B moves to the left side
- Shift solenoid valve C: ON, and shift valve C moves to the left side
- Shift solenoid valve D: OFF, and shift valve D stays on the left side
- Shift solenoid valve E: OFF, and shift valve E stays on the left side

Line pressure (1) becomes the 1st clutch pressure (10) at shift valve B.

Fluid flows to 1st clutch by way of:
Line Pressure (1) → Shift Valve D — Line Pressure (1A) → Shift Valve A — Line Pressure (1B) → Manual Valve — Line Pressure (5A) → Shift Valve C — Line Pressure (5B) → Shift Valve B — 1st Clutch Pressure (10) → 1st Clutch

The 1st clutch pressure (10) is applied to the 1st clutch, and the 1st clutch is engaged.

NOTE: When used, "left" or "right" indicates direction on the hydraulic circuit.

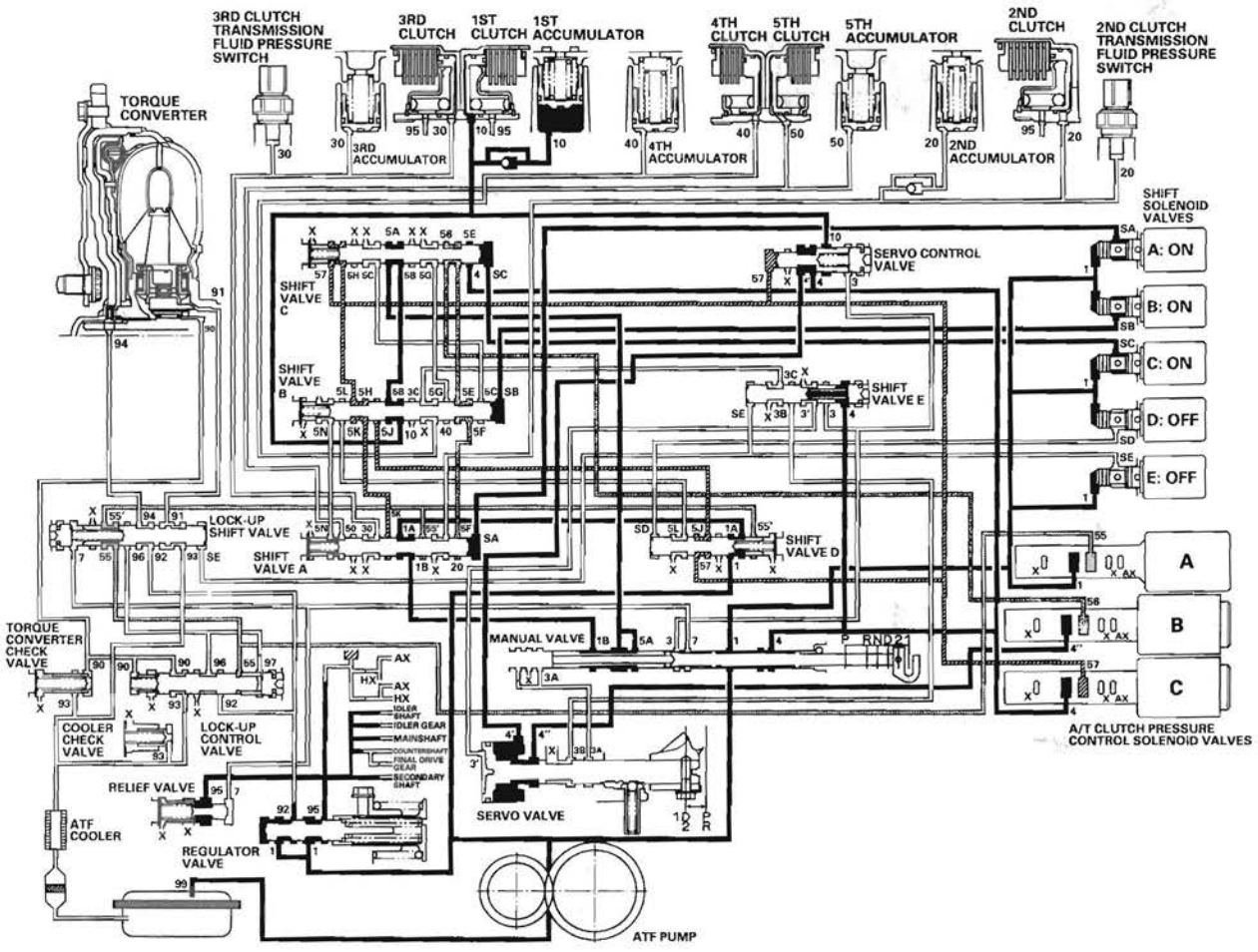

R Position: Shifting to R position from P or N position

When shifting in the R position, the PCM turns shift solenoid valves B and E ON, and A, C, and D OFF. Shift solenoid valve B pressure (SB) is applied to the right side of shift valve B, and shift valve B is moved to left side. Shift solenoid valve E pressure (SE) is applied to the left side of shift valve E, and shift valve E is moved to the right side. Line pressure (1) changes to (3) at the manual valve, and flows to the servo valve via shift valve E. The servo valve is moved to reverse range position. Movement of shift valves B and E, and servo valve creates 4th clutch pressure line between the 4th clutch and the A/T clutch pressure control solenoid valve A. The 4th clutch pressure (40) is applied to the 4th clutch, and the 4th clutch is engaged gently.

NOTE: When used, "left" or "right" indicates direction on the hydraulic circuit.

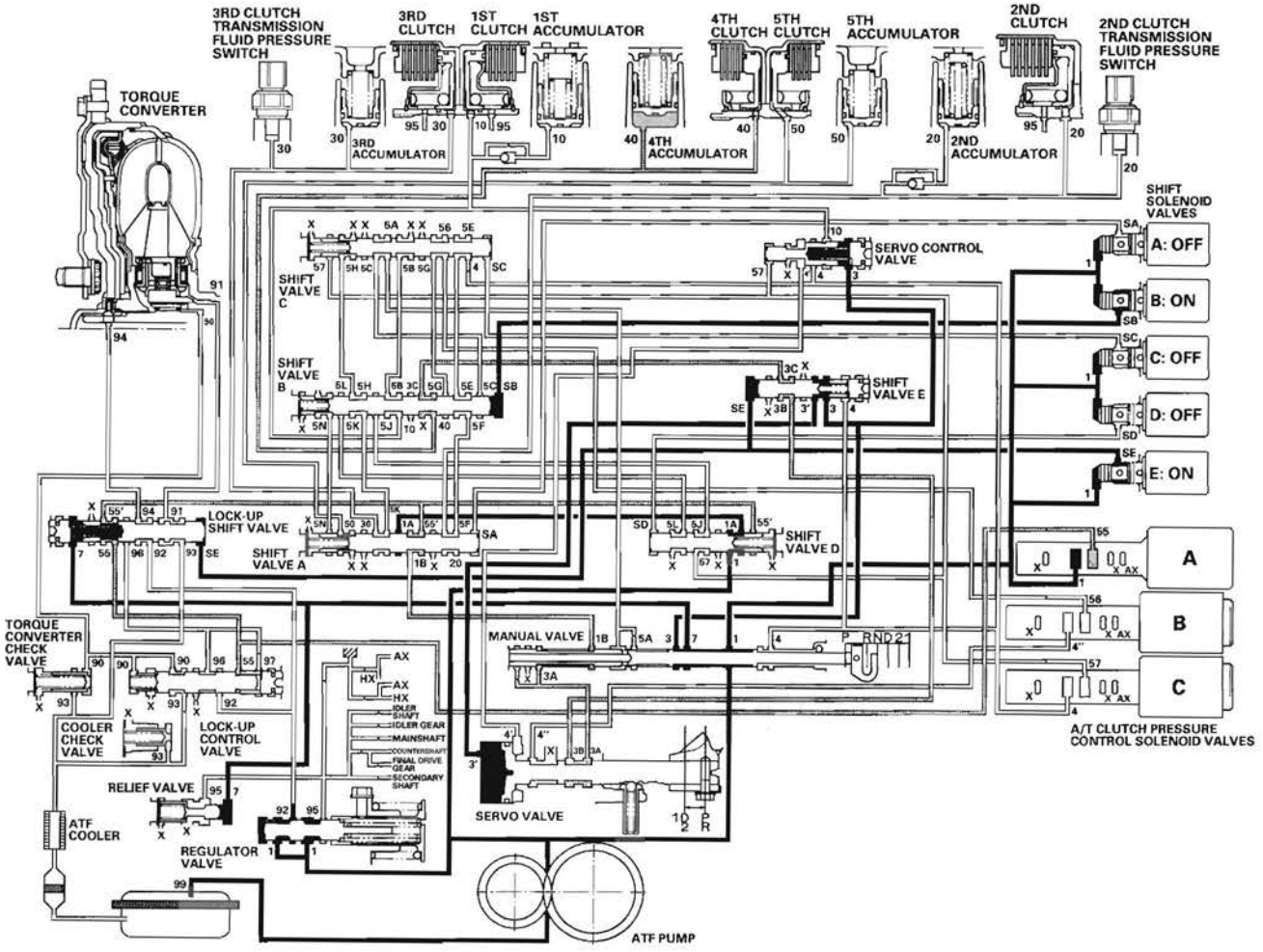

(cont'd)

System Description (cont'd)

Hydraulic Flow (cont'd)

R Position: Driving in reverse gear
After starting off in reverse gear, the PCM turns shift solenoid valve A ON, and keeps B and E ON, and C and D OFF. Shift solenoid valve A pressure (SA) is applied to the right side of shift valve A to cover the A/T clutch pressure control solenoid valve A pressure port, and to uncover the line pressure port leading to the 4th clutch creating full line pressure. The 4th clutch is engaged securely with line pressure.

Reverse Inhibitor Control
While the vehicle is moving forward, the PCM keeps shift solenoid valve E remaining OFF. Shift valve E covers the port of line pressure (3') leading to the servo valve reverse position. The servo valve cannot be shifted to reverse position, and hydraulic pressure is not applied to the 4th clutch from servo valve for reverse; as a result, power is not transmitted to the reverse direction.

NOTE: When used, "left" or "right" indicates direction on the hydraulic circuit.

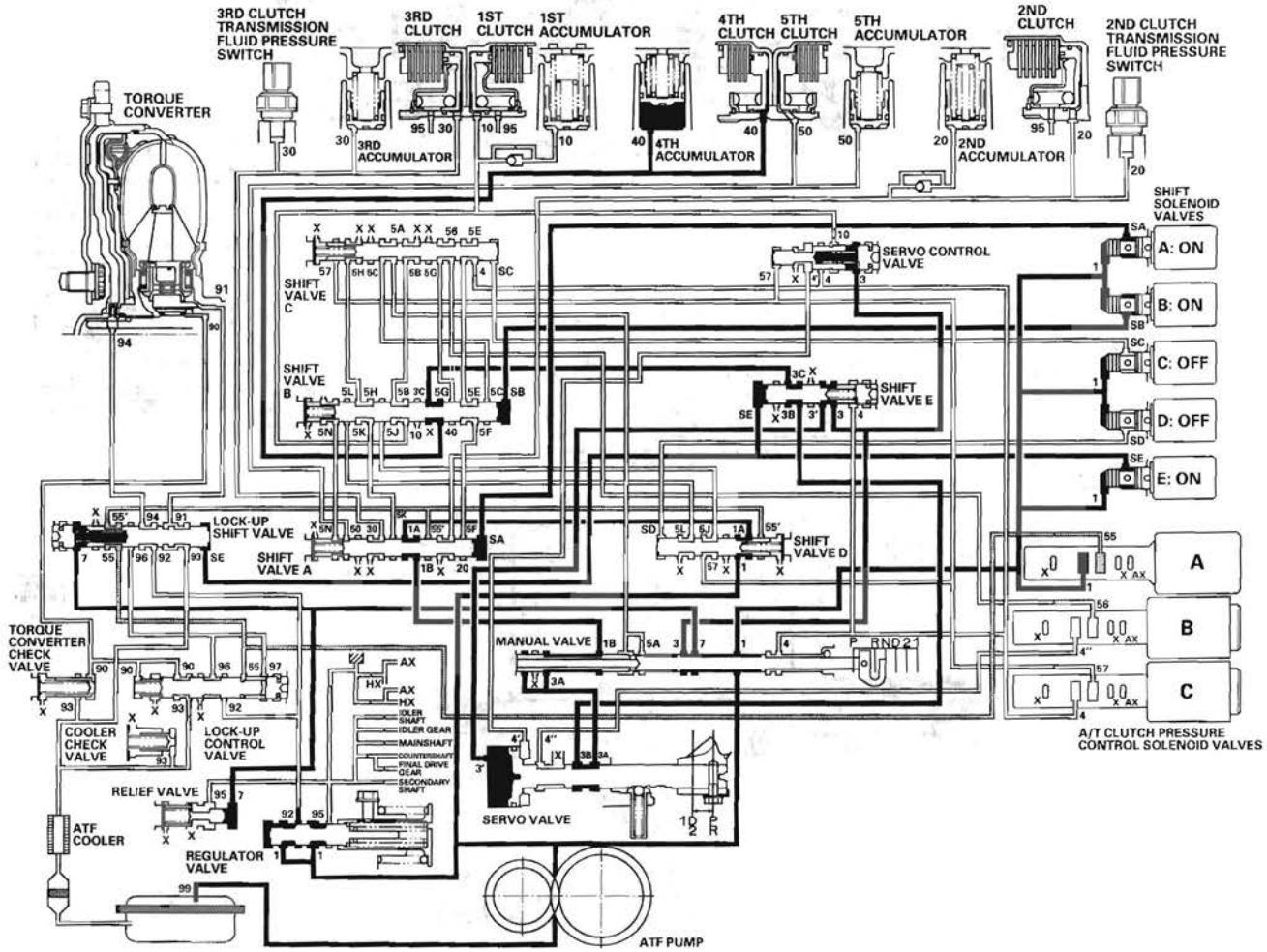

P Position

Shift solenoid valves B and E are turned ON, and A, C, and D are turned OFF by the PCM. Line pressure (1) flows to the shift solenoid valves and the A/T clutch pressure control solenoid valve A. Line pressure (3) changes to (3') at shift valve E, and flows to the servo valve. The servo valve is moved to reverse/park position. Hydraulic pressure is not applied to the clutches.

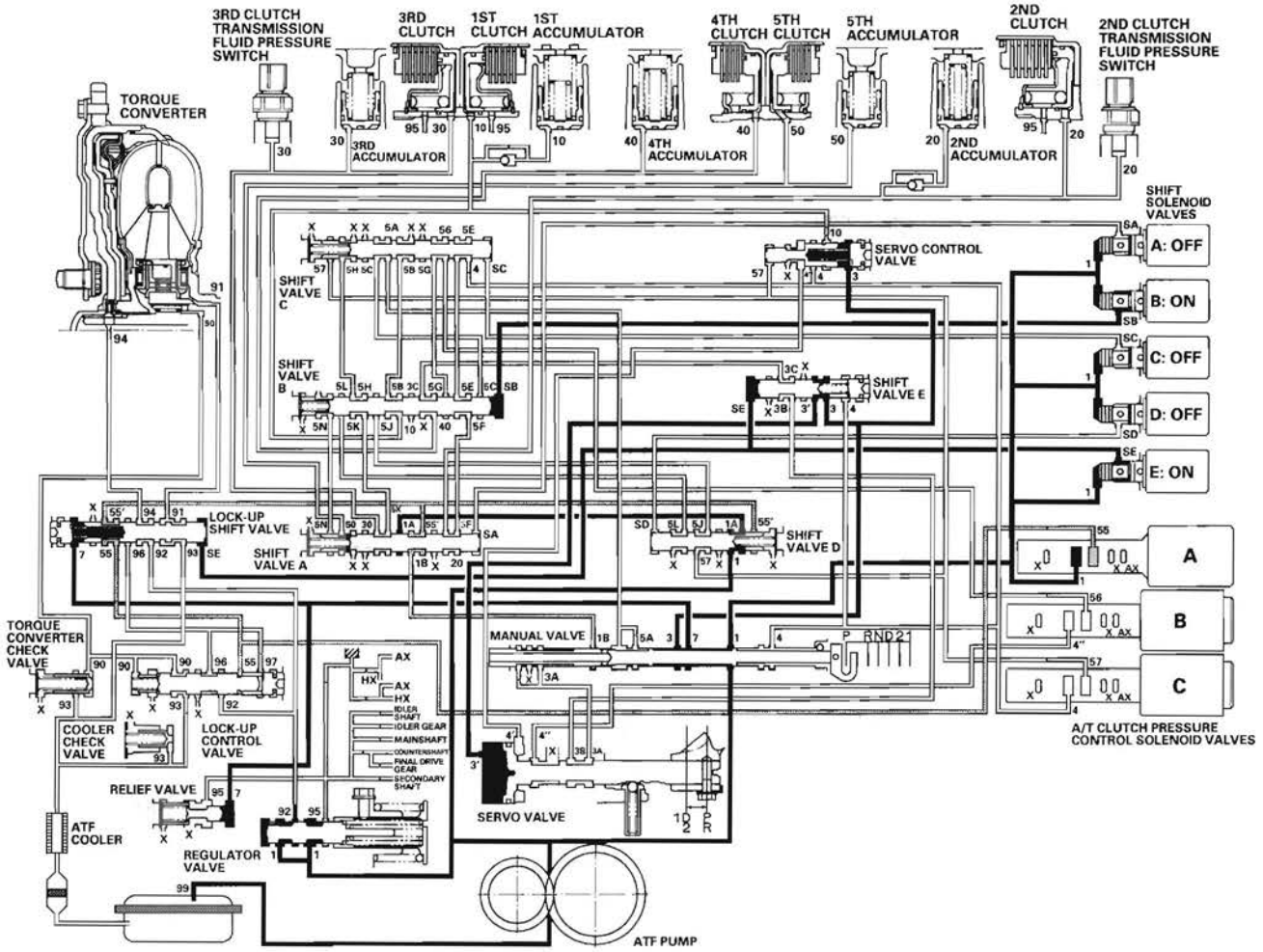

System Description (cont'd)

Lock-up System

The lock-up mechanism of the torque converter clutch operates in D position (2nd, 3rd, 4th, and 5th), and in D position D3 driving mode (2nd and 3rd). The pressurized fluid is drained from the back of the torque converter through a fluid passage, causing the torque converter clutch piston to be held against the torque converter cover. As this takes place, the mainshaft rotates at the same speed as the engine crankshaft. Together with the hydraulic control, the PCM optimizes the timing and amount of the lock-up mechanism. When the shift solenoid valve E is turned on by the PCM, shift solenoid valve E pressure switches the lock-up shift valve lock-up on and off. A/T clutch pressure control solenoid valve A and the lock-up control valve control the amount of the lock-up.

Torque Converter Clutch Lock-up ON (Engaging Torque Converter Clutch)
Fluid in the chamber between the torque converter cover and the torque converter clutch piston is drained off, and fluid entering from the chamber between the pump and stator exerts pressure through the torque converter clutch piston against the torque converter cover. The torque converter clutch piston engages with the torque converter cover; the torque converter clutch lock-up is ON, and the mainshaft rotates at the same speed as the engine.

Power flow

The power flows by way of:

Engine
↓
Drive plate
↓
Torque converter cover
↓
Torque converter clutch piston
↓
Damper spring
↓
Turbine
↓
Mainshaft

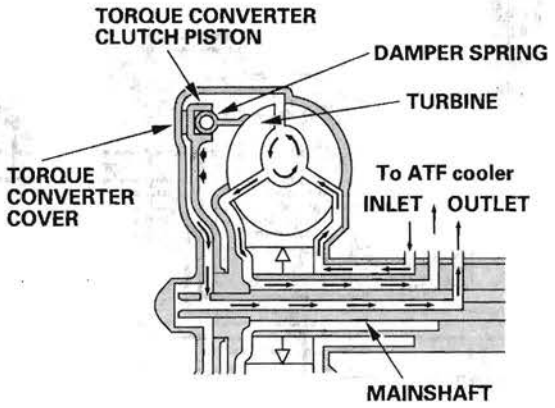

Torque Converter Clutch Lock-up OFF (Disengaging Torque Converter Clutch)
Fluid entered from the chamber between the torque converter cover and the torque converter clutch piston passes through the torque converter and goes out through the chambers between the turbine and the stator, and between the pump and the stator. As a result, the torque converter clutch piston moves away from the torque converter cover, and the torque converter lock-up clutch is released; torque converter clutch lock-up is OFF.

Power flow

The power flows by the way of :

Engine
↓
Drive plate
↓
Torque converter cover
↓
Pump
↓
Turbine
↓
Mainshaft

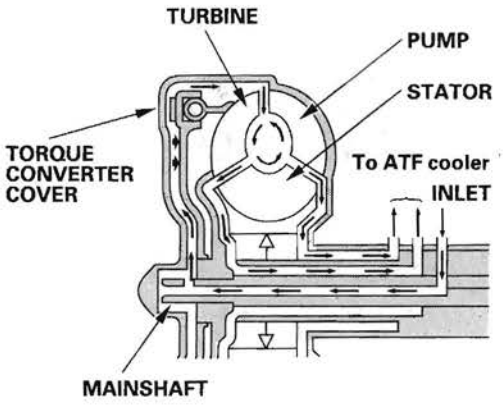

No Lock-up

Shift solenoid valve E is turned OFF by the PCM, and shift solenoid valve E pressure (SE) is not applied to the lock-up shift valve. The lock-up shift valve stays to the right to uncover the torque converter pressure ports leading to the left side of the torque converter and releasing pressure from the right side of the torque converter. Torque converter pressure (92) changes to (94) at the lock-up shift valve, and enters into the left side of the torque converter to disengage the torque converter clutch. This keeps the torque converter clutch piston keeps away from the torque converter cover and the torque converter clutch lock-up is OFF.

NOTE: When used, "left" or "right" indicates direction on the hydraulic circuit.

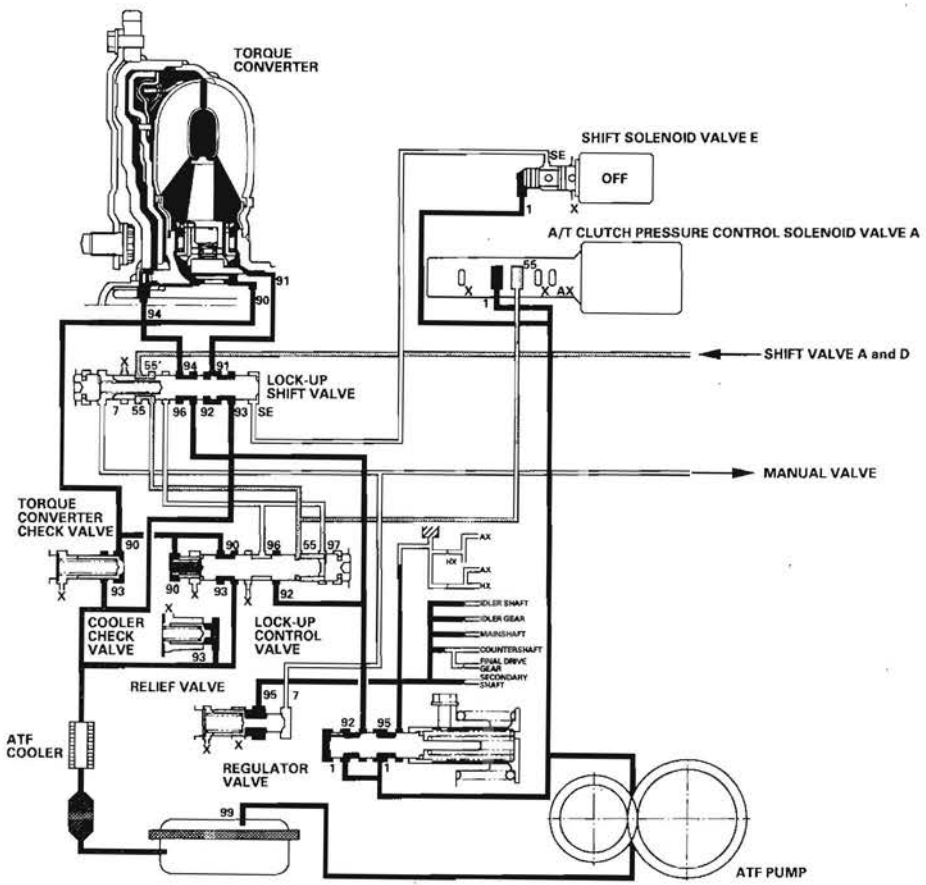

(cont'd)

System Description (cont'd)

Lock-up System (cont'd)

Partial Lock-up

As the speed of the vehicle reaches the programmed value, shift solenoid valve E is turned ON by the PCM, and shift solenoid valve E pressure (SE) is applied to the right side of the lock-up shift valve. The lock-up shift valve is moved to the left side to switch the torque converter pressure (91) port, which goes to the right side of the torque converter, and the port of torque converter pressure (94) is released from the left side of the torque converter. Torque converter pressure (91) flows to the right side of the torque converter to engage the torque converter clutch. The PCM also controls the A/T clutch pressure control solenoid valve A, and A/T clutch pressure control solenoid valve A pressure (55) is applied to the lock-up shift valve and lock-up control valve. The position of the lock-up control valve depends on A/T clutch pressure control solenoid valve A pressure (55) and torque converter pressure released from the torque converter. The lock-up control valve controls the amount of torque converter clutch lock-up until fluid between the clutch piston and torque converter cover is fully released; the torque converter clutch is in partial lock-up.

NOTE: When used, "left" or "right" indicates direction on the hydraulic circuit.

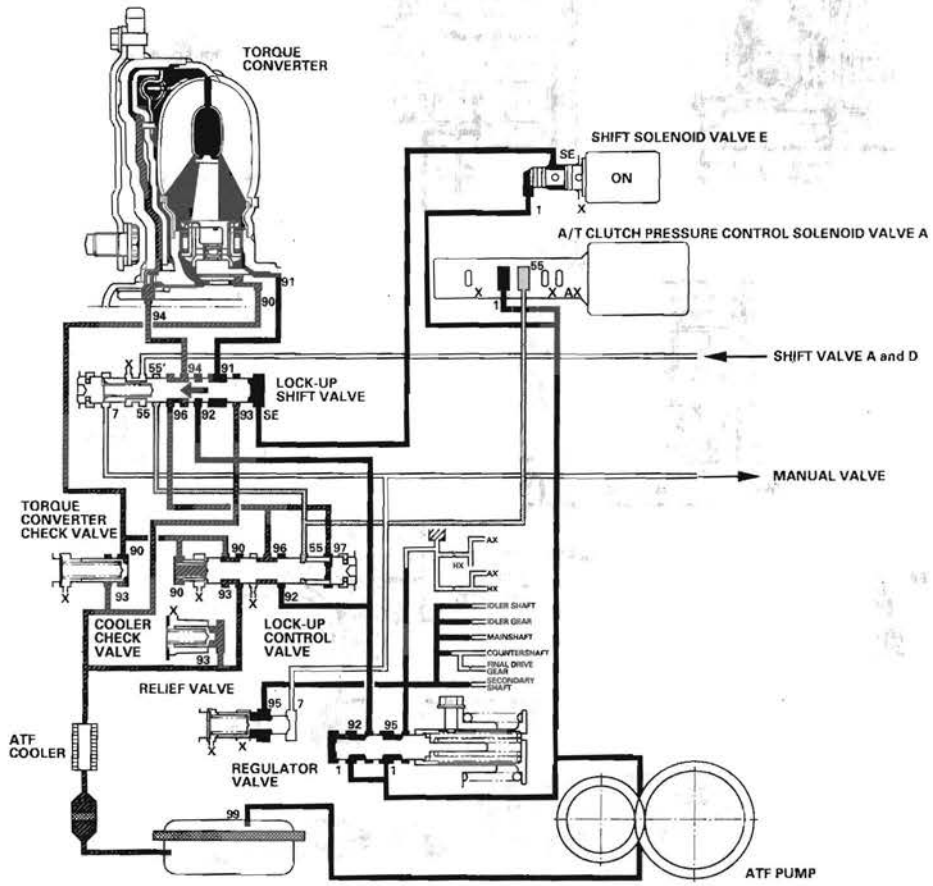

Full Lock-up
When the vehicle speed increases, the PCM sends a signal to A/T clutch pressure control solenoid valve A to increase A/T clutch pressure control solenoid valve A pressure (55), and the lock-up control valve is moved to the left side by the increased pressure. Then converter pressure (94) from the left side of the torque converter is completely released at the lock-up control valve, and torque converter pressure (91) engages the torque converter clutch securely; the torque converter clutch is in full lock-up.

NOTE: When used, "left" or "right" indicates direction on the hydraulic circuit.

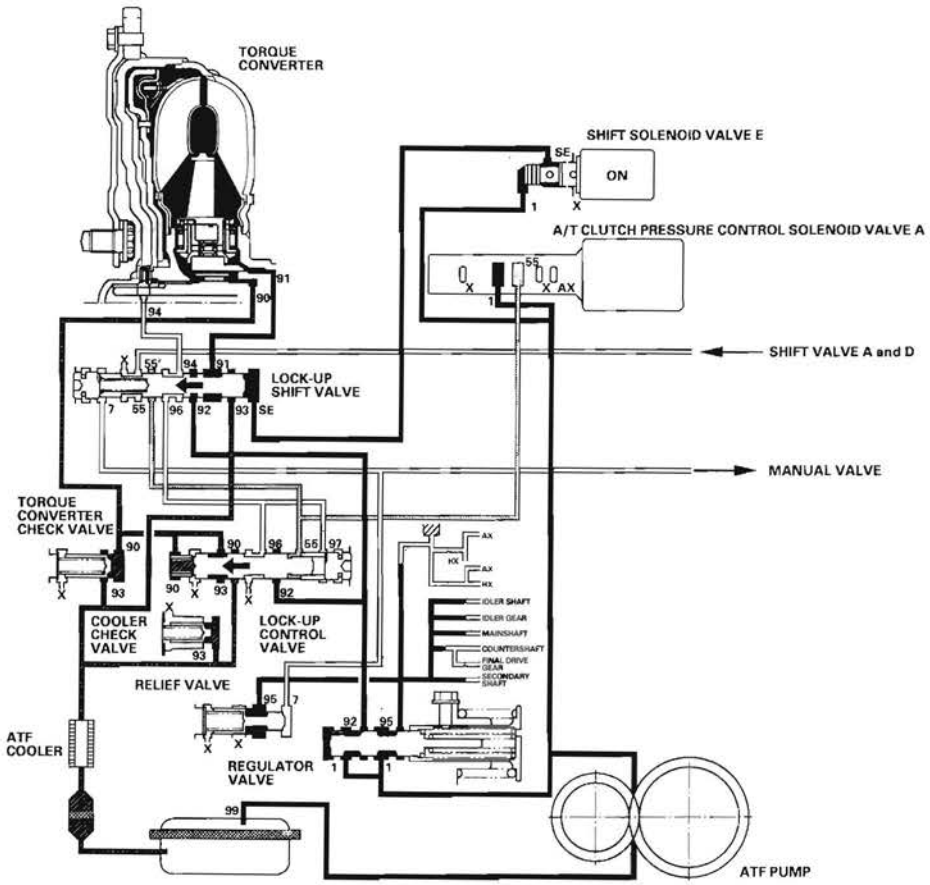

System Description (cont'd)

Circuit Diagram - PCM A/T Control System

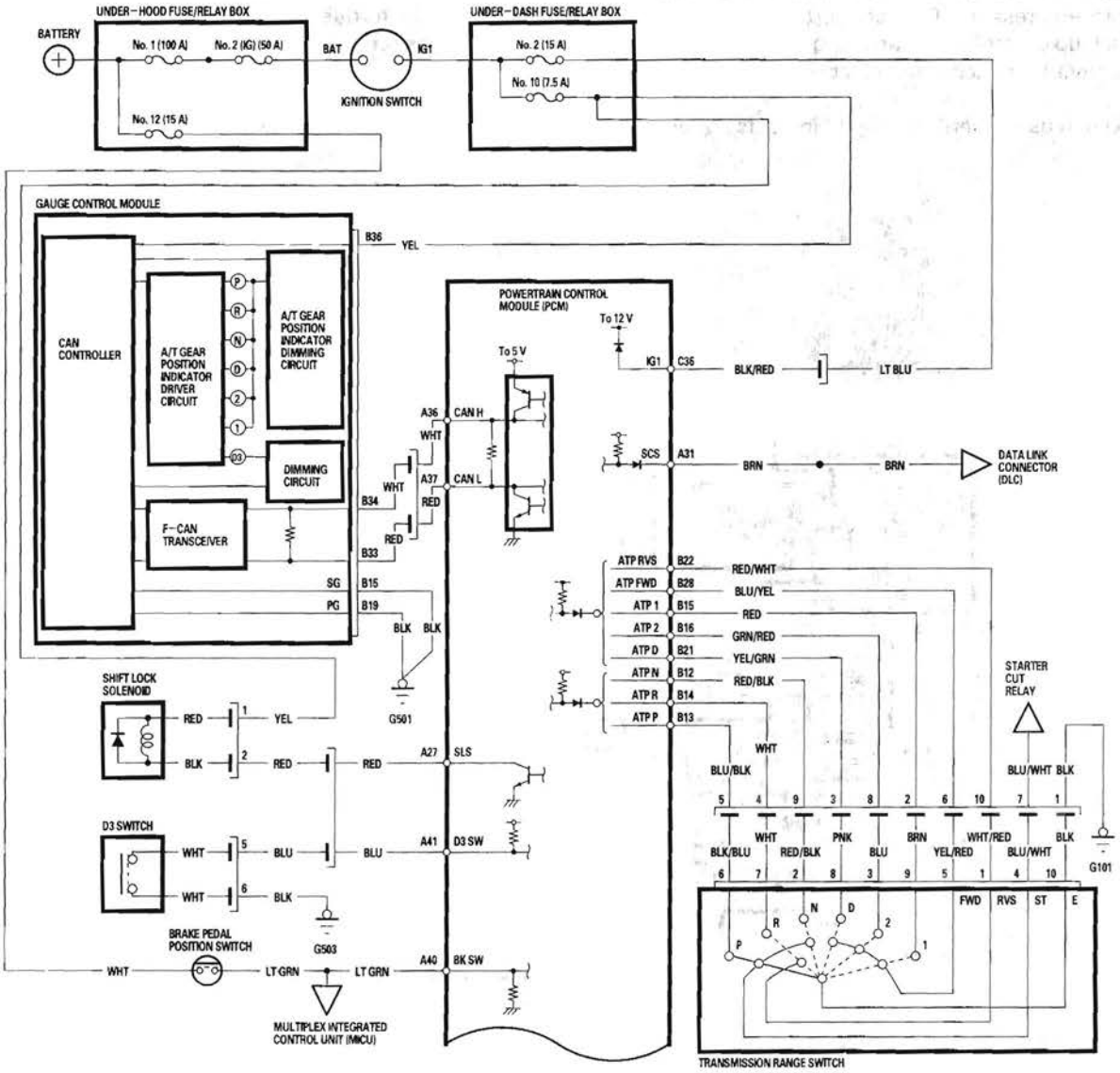

PCM Harness Connector Terminal Locations

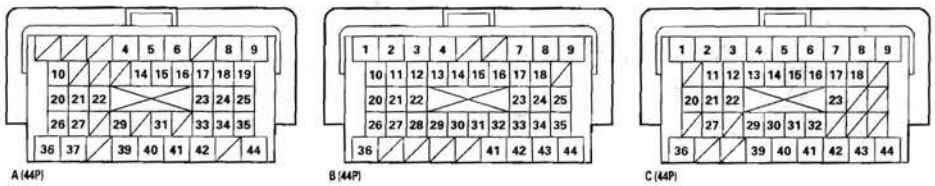

Terminal side of female terminals

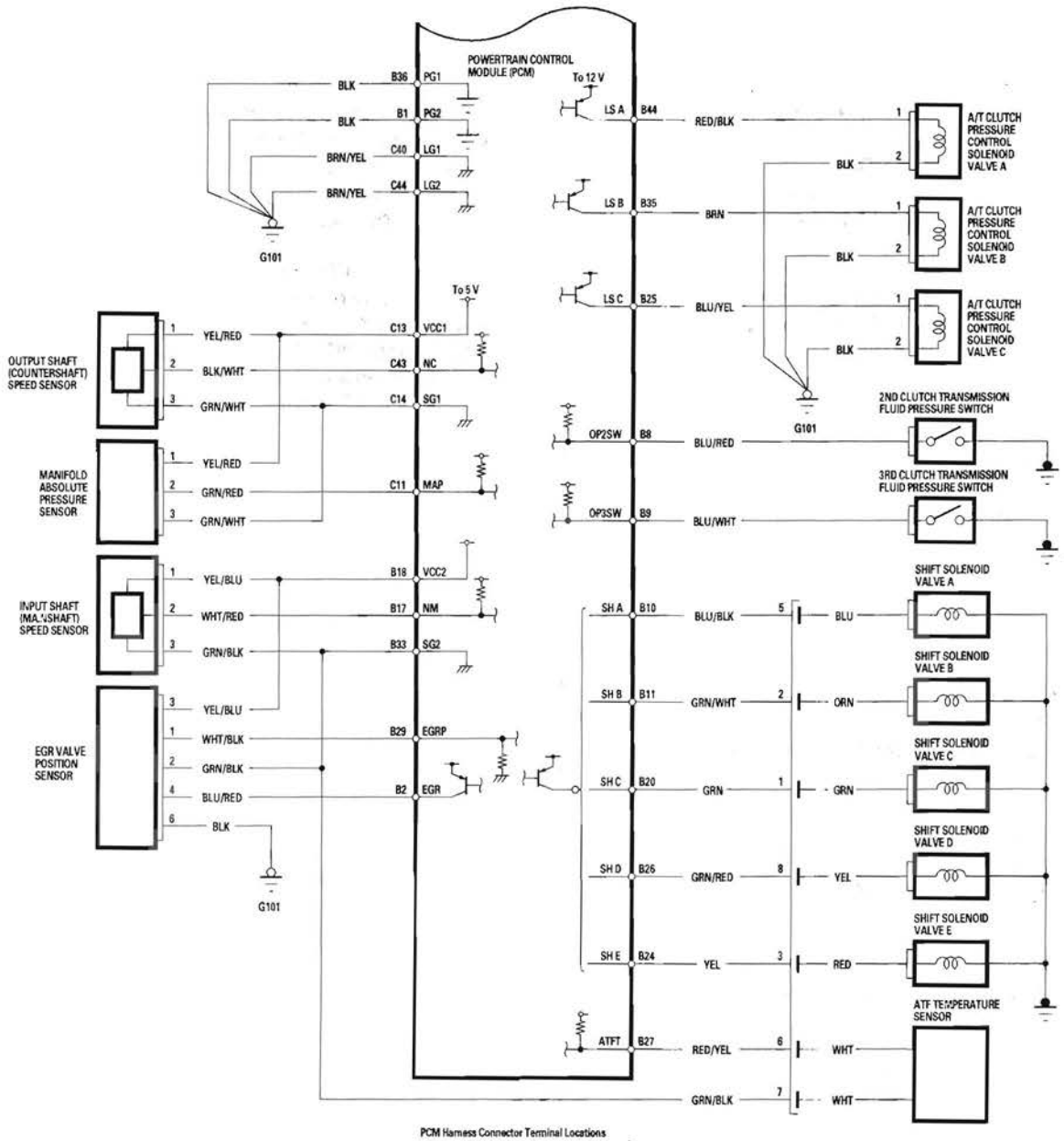

PCM Harness Connector Terminal Locations

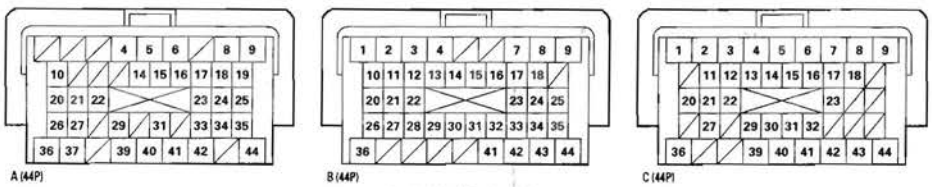

Terminal side of female terminals

DTC Troubleshooting

DTC P0107: Manifold Absolute Pressure (MAP) Sensor Circuit Low Voltage Input

NOTE: Before you troubleshoot, record all freeze data and any on-board snapshot, and review General Troubleshooting Information (see page 14-4).

1. Clear the DTC with the HDS.
2. Turn the ignition switch OFF, then turn it ON (II) again.
3. Check whether DTC P0107 is indicated in the DTCs/ Freeze Data in PGM-FI Mode Menu with the HDS.

   Is DTC P0107 indicated in the PGM-FI system?

   YES—Troubleshoot for DTC P0107 in the PGM-FI System (see page 11-69). ■

   NO—Go to step 4.
4. Check whether DTC P0107 is indicated in the DTCs/ Freeze Data in A/T Mode Menu with the HDS.

   Is DTC P0107 indicated?

   YES—Go to step 5.

   NO—Intermittent failure, the system is OK at this time. ■
5. Update the A/T software in the PCM if it does not have the latest software (see page 14-9), or substitute a known-good PCM (see page 14-10).
6. Turn the ignition switch OFF, then turn it ON (II).
7. Check for DTC(s) in the DTCs/Freeze Data in A/T Mode Menu with the HDS.

   Is DTC P0107 indicated?

   YES—Check for poor connections and loose terminals at the MAP sensor and the PCM. If the PCM was updated, substitute a known-good PCM (see page 14-10), then recheck. If the PCM was substituted, go to step 1.

   NO—Go to step 8.
8. Monitor the OBD STATUS for P0107 in the DTCs/ Freeze Data in A/T Mode Menu for a pass/fail.

   Does the HDS indicate PASSED?

   YES—If the PCM was updated, troubleshooting is complete. If the PCM was substituted, replace the original PCM (see page 11-219). If any other DTCs were indicated on step 7, go to the indicated DTC's troubleshooting. ■

   NO—If the HDS indicates FAILED, check for poor connections and loose terminals at the MAP sensor and the PCM. If the PCM was updated, substitute a known-good PCM (see page 14-10), then recheck. If the PCM was substituted, go to step 1. If the HDS indicates NOT COMPLETED, keep idling until a result comes on.

DTC P0108: Manifold Absolute Pressure (MAP) Sensor Circuit High Voltage Input

NOTE: Before you troubleshoot, record all freeze data and any on-board snapshot, and review General Troubleshooting Information (see page 14-4).

1. Clear the DTC with the HDS.
2. Turn the ignition switch OFF, then turn it ON (II) again.
3. Check whether DTC P0108 is indicated in the DTCs/ Freeze Data in PGM-FI Mode Menu with the HDS.

   Is DTC P0108 indicated in the PGM-FI system?

   YES—Troubleshoot for DTC P0108 in the PGM-FI System (see page 11-71).■

   NO—Go to step 4.
4. Check whether DTC P0108 is indicated in the DTCs/ Freeze Data in A/T Mode Menu with the HDS.

   Is DTC P0108 indicated?

   YES—Go to step 5.

   NO—Intermittent failure, the system is OK at this time.■
5. Update the A/T software in the PCM if it does not have the latest software (see page 14-9), or substitute a known-good PCM (see page 14-10).
6. Turn the ignition switch OFF, then turn it ON (II).
7. Check for DTC(s) in the DTCs/Freeze Data in A/T Mode Menu with the HDS.

   Is DTC P0108 indicated?

   YES—Check for poor connections and loose terminals at the MAP sensor and the PCM. If the PCM was updated, substitute a known-good PCM (see page 14-10), then recheck. If the PCM was substituted, go to step 1.

   NO—Go to step 8.
8. Monitor the OBD STATUS for P0108 in the DTCs/ Freeze Data in A/T Mode Menu for a pass/fail.

   Does the HDS indicate PASSED?

   YES—If the PCM was updated, troubleshooting is complete. If the PCM was substituted, replace the original PCM (see page 11-219). If any other DTCs were indicated on step 7, go to the indicated DTC's troubleshooting.■

   NO—If the HDS indicates FAILED, check for poor connections and loose terminals at the MAP sensor and the PCM. If the PCM was updated, substitute a known-good PCM (see page 14-10), then recheck. If the PCM was substituted, go to step 1. If the HDS indicates NOT COMPLETED, keep idling until a result comes on.

DTC Troubleshooting (cont'd)

DTC P0335: Crankshaft Position (CKP) Sensor No Signal

NOTE: Before you troubleshoot, record all freeze data and any on-board snapshot, and review General Troubleshooting Information (see page 14-4).

1. Clear the DTC with the HDS.
2. Start the engine.
3. Check whether DTC P0335 is indicated in the DTCs/ Freeze Data in PGM-FI Mode Menu with the HDS.

   Is DTC P0335 indicated in the PGM-FI system?

   YES—Troubleshoot for DTC P0335 in the PGM-FI System (see page 11-122). ■

   NO—Go to step 4.
4. Check whether DTC P0335 is indicated in the DTCs/ Freeze Data in A/T Mode Menu with the HDS.

   Is DTC P0335 indicated?

   YES—Go to step 5.

   NO—Intermittent failure, the system is OK at this time. ■
5. Update the A/T software in the PCM if it does not have the latest software (see page 14-9), or substitute a known-good PCM (see page 14-10).
6. Start the engine.
7. Check for DTC(s) in the DTCs/Freeze Data in A/T Mode Menu with the HDS.

   Is DTC P0335 indicated?

   YES—Check for poor connections and loose terminals at the CKP sensor and the PCM. If the PCM was updated, substitute a known-good PCM (see page 14-10), then recheck. If the PCM was substituted, go to step 1.

   NO—Go to step 8.
8. Monitor the OBD STATUS for P0335 in the DTCs/ Freeze Data in A/T Mode Menu for a pass/fail.

   Does the HDS indicate PASSED?

   YES—If the PCM was updated, troubleshooting is complete. If the PCM was substituted, replace the original PCM (see page 11-219). If any other DTCs were indicated on step 7, go to the indicated DTC's troubleshooting. ■

   NO—If the HDS indicates FAILED, check for poor connections and loose terminals at the CKP sensor and the PCM. If the PCM was updated, substitute a known-good PCM (see page 14-10), then recheck. If the PCM was substituted, go to step 1. If the HDS indicates NOT COMPLETED, keep idling until a result comes on.

DTC P0339: Crankshaft Position (CKP) Sensor Circuit Intermittent Interruption

NOTE: Before you troubleshoot, record all freeze data and any on-board snapshot, and review General Troubleshooting Information (see page 14-4).

1. Clear the DTC with the HDS.
2. Start the engine, and let it idle for 10 seconds.
3. Check whether DTC P0339 is indicated in the DTCs/ Freeze Data in PGM-FI Mode Menu with the HDS.

   Is DTC P0339 indicated in the PGM-FI system?

   YES—Troubleshoot for DTC P0339 in the PGM-FI System (see page 11-125). ■

   NO—Go to step 4.
4. Check whether DTC P0339 is indicated in the DTCs/ Freeze Data in A/T Mode Menu with the HDS.

   Is DTC P0339 indicated?

   YES—Go to step 5.

   NO—Intermittent failure, the system is OK at this time. ■
5. Update the A/T software in the PCM if it does not have the latest software (see page 14-9), or substitute a known-good PCM (see page 14-10).
6. Start the engine, and let it idle for 10 seconds.
7. Check for DTC(s) in the DTCs/Freeze Data in A/T Mode Menu with the HDS.

   Is DTC P0339 indicated?

   YES—Check for poor connections and loose terminals at the CKP sensor and the PCM. If the PCM was updated, substitute a known-good PCM (see page 14-10), then recheck. If the PCM was substituted, go to step 1.

   NO—Go to step 8.
8. Monitor the OBD STATUS for P0339 in the DTCs/ Freeze Data in A/T Mode Menu for a pass/fail.

   Does the HDS indicate PASSED?

   YES—If the PCM was updated, troubleshooting is complete. If the PCM was substituted, replace the original PCM (see page 11-219). If any other DTCs were indicated on step 7, go to the indicated DTC's troubleshooting. ■

   NO—If the HDS indicates FAILED, check for poor connections and loose terminals at the CKP sensor and the PCM. If the PCM was updated, substitute a known-good PCM (see page 14-10), then recheck. If the PCM was substituted, go to step 1. If the HDS indicates NOT COMPLETED, keep idling until a result comes on.

DTC Troubleshooting (cont'd)

DTC P0365: Camshaft Position (CMP) Sensor B No Signal

NOTE: Before you troubleshoot, record all freeze data and any on-board snapshot, and review General Troubleshooting Information (see page 14-4).

1. Clear the DTC with the HDS.
2. Start the engine.
3. Check whether DTC P0365 is indicated in the DTCs/ Freeze Data in PGM-FI Mode Menu with the HDS.

   Is DTC P0365 indicated in the PGM-FI system?

   YES—Troubleshoot for DTC P0365 in the PGM-FI System (see page 11-126).■

   NO—Go to step 4.
4. Check whether DTC P0365 is indicated in the DTCs/ Freeze Data in A/T Mode Menu with the HDS.

   Is DTC P0365 indicated?

   YES—Go to step 5.

   NO—Intermittent failure, the system is OK at this time.■
5. Update the A/T software in the PCM if it does not have the latest software (see page 14-9), or substitute a known-good PCM (see page 14-10).
6. Start the engine.
7. Check for DTC(s) in the DTCs/Freeze Data in A/T Mode Menu with the HDS.

   Is DTC P0365 indicated?

   YES—Check for poor connections and loose terminals at the CMP sensor and the PCM. If the PCM was updated, substitute a known-good PCM (see page 14-10), then recheck. If the PCM was substituted, go to step 1.

   NO—Go to step 8.
8. Monitor the OBD STATUS for P0365 in the DTCs/ Freeze Data in A/T Mode Menu for a pass/fail.

   Does the HDS indicate PASSED?

   YES—If the PCM was updated, troubleshooting is complete. If the PCM was substituted, replace the original PCM (see page 11-219). If any other DTCs were indicated on step 7, go to the indicated DTC's troubleshooting.■

   NO—If the HDS indicates FAILED, check for poor connections and loose terminals at the CMP sensor and the PCM. If the PCM was updated, substitute a known-good PCM (see page 14-10), then recheck. If the PCM was substituted, go to step 1. If the HDS indicates NOT COMPLETED, keep idling until a result comes on.

DTC P0369: Camshaft Position (CMP) Sensor B Intermittent Interruption

NOTE: Before you troubleshoot, record all freeze data and any on-board snapshot, and review General Troubleshooting Information (see page 14-4).

1. Clear the DTC with the HDS.
2. Start the engine, and let it idle for 10 seconds.
3. Check whether DTC P0369 is indicated in the DTCs/ Freeze Data in PGM-FI Mode Menu with the HDS.

   Is DTC P0369 indicated in the PGM-FI system?

   YES—Troubleshoot for DTC P0369 in the PGM-FI System (see page 11-129). ■

   NO—Go to step 4.

4. Check whether DTC P0369 is indicated in the DTCs/ Freeze Data in A/T Mode Menu with the HDS.

   Is DTC P0369 indicated?

   YES—Go to step 5.

   NO—Intermittent failure, the system is OK at this time. ■

5. Update the A/T software in the PCM if it does not have the latest software (see page 14-9), or substitute a known-good PCM (see page 14-10).
6. Start the engine, and let it idle for 10 seconds.
7. Check for DTC(s) in the DTCs/Freeze Data in A/T Mode Menu with the HDS.

   Is DTC P0369 indicated?

   YES—Check for poor connections and loose terminals at the CMP sensor and the PCM. If the PCM was updated, substitute a known-good PCM (see page 14-10), then recheck. If the PCM was substituted, go to step 1.

   NO—Go to step 8.

8. Monitor the OBD STATUS for P0369 in the DTCs/ Freeze Data in A/T Mode Menu for a pass/fail.

   Does the HDS indicate PASSED?

   YES—If the PCM was updated, troubleshooting is complete. If the PCM was substituted, replace the original PCM (see page 11-219). If any other DTCs were indicated on step 7, go to the indicated DTC's troubleshooting. ■

   NO—If the HDS indicates FAILED, check for poor connections and loose terminals at the CMP sensor and the PCM. If the PCM was updated, substitute a known-good PCM (see page 14-10), then recheck. If the PCM was substituted, go to step 1. If the HDS indicates NOT COMPLETED, keep idling until a result comes on.

DTC Troubleshooting (cont'd)

DTC P062F: PCM Internal Control Module Keep Alive Memory (KAM) Error

NOTE: Before you troubleshoot, record all freeze data and any on-board snapshot, and review General Troubleshooting Information (see page 14-4).

1. Clear the DTC with the HDS.
2. Check whether DTC P062F is indicated in the DTCs/ Freeze Data in PGM-FI Mode Menu with the HDS.

   Is DTC P062F indicated in the PGM-FI system?

   YES—Troubleshoot for DTC P062F in the PGM-FI System (see page 11-140). ■

   NO—Go to step 3.
3. Check whether DTC P062F is indicated in the DTCs/ Freeze Data in A/T Mode Menu with the HDS.

   Is DTC P062F indicated?

   YES—Go to step 4.

   NO—Intermittent failure, the system is OK at this time. ■
4. Update the A/T software in the PCM if it does not have the latest software (see page 14-9), or substitute a known-good PCM (see page 14-10).
5. Check for DTC(s) in the DTCs/Freeze Data in A/T Mode Menu with the HDS.

   Is DTC P062F indicated?

   YES—Check for poor connections and loose terminals at the PCM. If the PCM was updated, substitute a known-good PCM (see page 14-10), then recheck. If the PCM was substituted, go to step 1.

   NO—Go to step 6.
6. Monitor the OBD STATUS for P062F in the DTCs/ Freeze Data in A/T Mode Menu for a pass/fail.

   Does the HDS indicate PASSED?

   YES—If the PCM was updated, troubleshooting is complete. If the PCM was substituted, replace the original PCM (see page 11-219). If any other DTCs were indicated on step 5, go to the indicated DTC's troubleshooting. ■

   NO—If the HDS indicates FAILED, check for poor connections and loose terminals at the PCM. If the PCM was updated, substitute a known-good PCM (see page 14-10), then recheck. If the PCM was substituted, go to step 1. If the HDS indicates NOT COMPLETED, keep idling until a result comes on.

DTC P0705: Short in Transmission Range Switch Circuit (Multiple Shift-Position Input)

NOTE:
- Before you troubleshoot, record all freeze data and any on-board snapshot, and review General Troubleshooting Information (see page 14-4).
- This code is caused by an electrical circuit problem and cannot be caused by a mechanical problem in the transmission.

1. Clear the DTC with the HDS.
2. Start the engine.
3. With the brake pedal pressed, move the shift lever through all positions. Stop for at least 1 second in each position, and monitor the OBD STATUS for P0705 in the DTCs/Freeze Data in A/T Mode Menu for a pass/fail.

   Does the HDS indicate FAILED?

   YES—Go to step 4.

   NO—Intermittent failure, the system is OK at this time. Check for an intermittent short in the wire between the transmission range switch and the PCM. If the HDS indicates NOT COMPLETED, return to step 2 and recheck.
4. Turn the ignition switch OFF.
5. Inspect the transmission range switch (see page 14-292).

   Is the switch OK?

   YES—With the switch connector disconnected, go to step 6.

   NO—Replace the transmission range switch (see page 14-294), then go to step 53.
6. Turn the ignition switch ON (II).
7. Measure the voltage between transmission range switch connector terminals No. 6 and No. 10.

TRANSMISSION RANGE SWITCH CONNECTOR

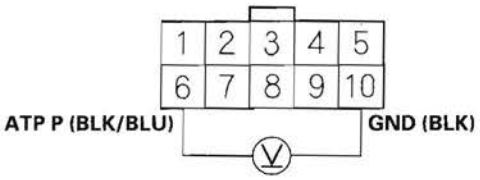

Wire side of female terminals

Is there battery voltage?

YES—Go to step 13.

NO—Go to step 8.

8. Turn the ignition switch OFF.
9. Jump the SCS line with the HDS.
10. Disconnect PCM connector B (44P).
11. Check for continuity between PCM connector terminal B13 and body ground.

PCM CONNECTOR B (44P)

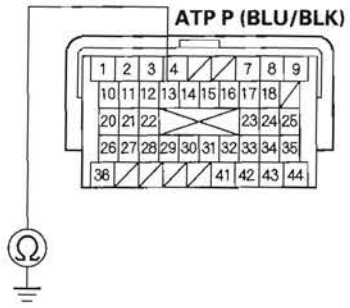

Terminal side of female terminals

Is there continuity?

YES—Repair short in the wire between PCM connector terminal B13 and the transmission range switch, then go to step 53.

NO—Go to step 12.

(cont'd)

DTC Troubleshooting (cont'd)

12. Check for continuity between transmission range switch connector terminal No. 10 and body ground.

TRANSMISSION RANGE SWITCH CONNECTOR

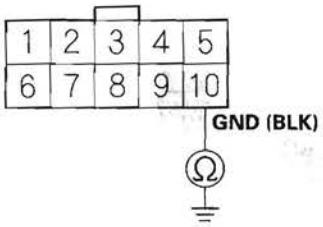

Wire side of female terminals

Is there continuity?

YES—Go to step 48.

NO—Repair open in the wire between transmission range switch connector terminal No. 10 and ground (G101), or repair poor ground (G101), then go to step 53.

13. Measure the voltage between transmission range switch connector terminals No. 7 and No. 10.

TRANSMISSION RANGE SWITCH CONNECTOR

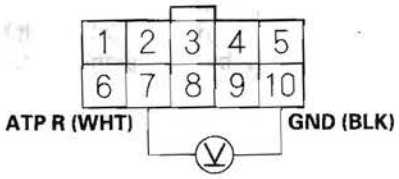

Wire side of female terminals

Is there battery voltage?

YES—Go to step 18.

NO—Go to step 14.

14. Turn the ignition switch OFF.
15. Jump the SCS line with the HDS.
16. Disconnect PCM connector B (44P).
17. Check for continuity between PCM connector terminal B14 and body ground.

PCM CONNECTOR B (44P)

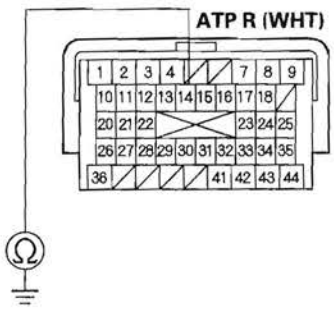

Terminal side of female terminals

Is there continuity?

YES—Repair short in the wire between PCM connector terminal B14 and the transmission range switch, then go to step 53.

NO—Go to step 48.

18. Measure the voltage between transmission range switch connector terminals No. 2 and No. 10.

TRANSMISSION RANGE SWITCH CONNECTOR

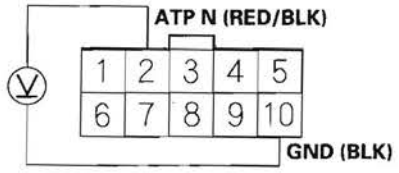

Wire side of female terminals

Is there about 5 V?

YES—Go to step 23.

NO—Go to step 19.

19. Turn the ignition switch OFF.
20. Jump the SCS line with the HDS.
21. Disconnect PCM connector B (44P).
22. Check for continuity between PCM connector terminal B12 and body ground.

PCM CONNECTOR B (44P)

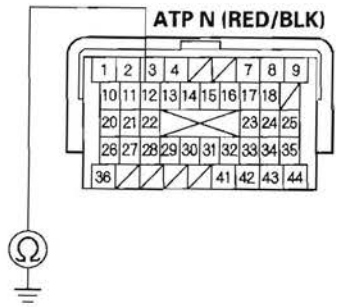

Terminal side of female terminals

Is there continuity?

YES—Repair short in the wire between PCM connector terminal B12 and the transmission range switch, then go to step 53.

NO—Go to step 48.

23. Measure the voltage between transmission range switch connector terminals No. 8 and No. 10.

TRANSMISSION RANGE SWITCH CONNECTOR

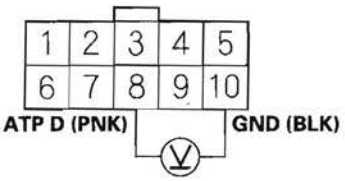

Wire side of female terminals

Is there battery voltage?

YES—Go to step 28.

NO—Go to step 24.

24. Turn the ignition switch OFF.
25. Jump the SCS line with the HDS.
26. Disconnect PCM connector B (44P).
27. Check for continuity between PCM connector terminal B21 and body ground.

PCM CONNECTOR B (44P)

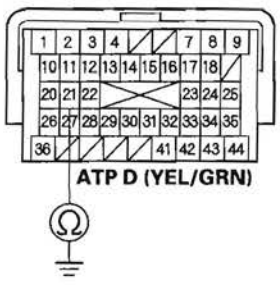

Terminal side of female terminals

Is there continuity?

YES—Repair short in the wire between PCM connector terminal B21 and the transmission range switch, then go to step 53.

NO—Go to step 48.

(cont'd)

DTC Troubleshooting (cont'd)

28. Measure the voltage between transmission range switch connector terminals No. 3 and No. 10.

TRANSMISSION RANGE SWITCH CONNECTOR

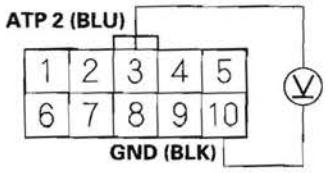

Wire side of female terminals

Is there battery voltage?

YES—Go to step 33.

NO—Go to step 29.

29. Turn the ignition switch OFF.
30. Jump the SCS line with the HDS.
31. Disconnect PCM connector B (44P).
32. Check for continuity between PCM connector terminal B16 and body ground.

PCM CONNECTOR B (44P)

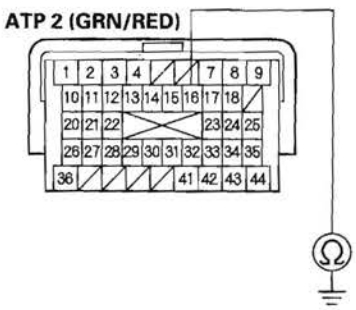

Terminal side of female terminals

Is there continuity?

YES—Repair short in the wire between PCM connector terminal B16 and the transmission range switch, then go to step 53.

NO—Go to step 48.

33. Measure the voltage between transmission range switch connector terminals No. 9 and No. 10.

TRANSMISSION RANGE SWITCH CONNECTOR

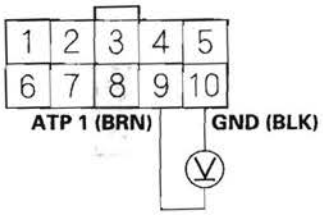

Wire side of female terminals

Is there battery voltage?

YES—Go to step 38.

NO—Go to step 34.

34. Turn the ignition switch OFF.
35. Jump the SCS line with the HDS.
36. Disconnect PCM connector B (44P).
37. Check for continuity between PCM connector terminal B15 and body ground.

PCM CONNECTOR B (44P)

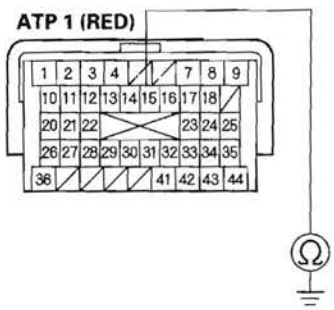

Terminal side of female terminals

Is there continuity?

YES—Repair short in the wire between PCM connector terminal B15 and the transmission range switch, then go to step 53.

NO—Go to step 48.

38. Measure the voltage between transmission range switch connector terminals No. 5 and No. 10.

TRANSMISSION RANGE SWITCH CONNECTOR

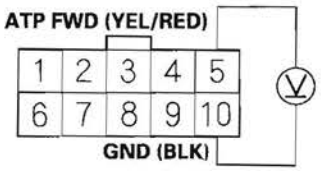

Wire side of female terminals

Is there battery voltage?

YES—Go to step 43.

NO—Go to step 39.

39. Turn the ignition switch OFF.
40. Jump the SCS line with the HDS.
41. Disconnect PCM connector B (44P).
42. Check for continuity between PCM connector terminal B28 and body ground.

PCM CONNECTOR B (44P)

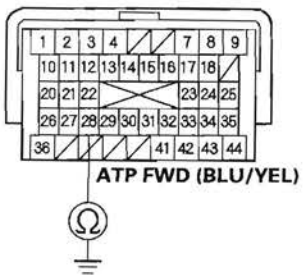

Terminal side of female terminals

Is there continuity?

YES—Repair short in the wire between PCM connector terminal B28 and the transmission range switch, then go to step 53.

NO—Go to step 48.

43. Measure the voltage between transmission range switch connector terminals No. 1 and No. 10.

TRANSMISSION RANGE SWITCH CONNECTOR

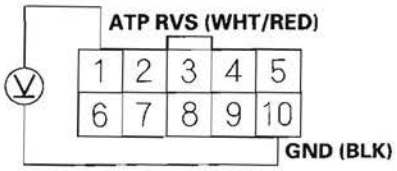

Wire side of female terminals

Is there battery voltage?

YES—Go to step 48.

NO—Go to step 44.

44. Turn the ignition switch OFF.
45. Jump the SCS line with the HDS.
46. Disconnect PCM connector B (44P).
47. Check for continuity between PCM connector terminal B22 and body ground.

PCM CONNECTOR B (44P)

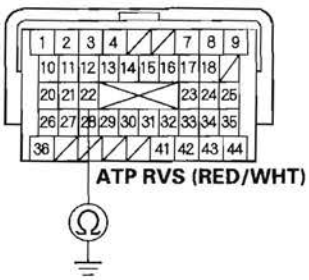

Terminal side of female terminals

Is there continuity?

YES—Repair short in the wire between PCM connector terminal B22 and the transmission range switch, then go to step 53.

NO—Go to step 48.

(cont'd)

DTC Troubleshooting (cont'd)

48. Update the A/T software in the PCM if it does not have the latest software (see page 14-9), or substitute a known-good PCM (see page 14-10).

49. Start the engine.

50. With the brake pedal pressed, move the shift lever through all position. Stop for at least 1 second in each position.

51. Check for DTC(s) in the DTCs/Freeze Data in A/T Mode Menu with the HDS.

    Is DTC P0705 indicated?

    YES—Check for poor connections and loose terminals at the transmission range switch and the PCM. If the PCM was updated, substitute a known-good PCM (see page 14-10), then recheck. If the PCM was substituted, go to step 1.

    NO—Go to step 52.

52. Monitor the OBD STATUS for P0705 in the DTCs/ Freeze Data in A/T Mode Menu for a pass/fail.

    Does the HDS indicate PASSED?

    YES—If the PCM was updated, troubleshooting is complete. If the PCM was substituted, replace the original PCM (see page 11-219). If any other DTCs were indicated on step 51, go to the indicated DTC's troubleshooting. ■

    NO—If the HDS indicates FAILED, check for poor connections and loose terminals at the transmission range switch and the PCM. If the PCM was updated, substitute a known-good PCM (see page 14-10), then recheck. If the PCM was substituted, go to step 1. If the HDS indicates NOT COMPLETED, keep idling until a result comes on.

53. Clear the DTC with the HDS.

54. Start the engine.

55. With the brake pedal pressed, move the shift lever through all position. Stop for at least 1 second in each position.

56. Check for DTC(s) in the DTCs/Freeze Data in A/T Mode Menu with the HDS.

    Is DTC P0705 indicated?

    YES—Replace the transmission range switch (see page 14-294), then return to step 53 and recheck.

    NO—Go to step 57.

57. Monitor the OBD STATUS for P0705 in the DTCs/ Freeze Data in A/T Mode Menu for a pass/fail.

    Does the HDS indicate PASSED?

    YES—Troubleshooting is complete. If any other DTCs were indicated on step 56, go to the indicated DTC's troubleshooting. ■

    NO—If the HDS indicates FAILED, check for poor connections and loose terminals at the transmission range switch and the PCM, then go to step 1. If the HDS indicates NOT COMPLETED, return to the step 54 and recheck.

DTC P0706: Open in Transmission Range Switch Circuit

NOTE:
- Before you troubleshoot, record all freeze data and any on-board snapshot, and review General Troubleshooting Information (see page 14-4).
- This code is caused by an electrical circuit problem and cannot be caused by a mechanical problem in the transmission.

1. Clear the DTC with the HDS.

2. 4WD model: Raise the vehicle on a lift, make sure it is securely supported, and allow all four wheels to rotate freely.
   2WD model: Raise the front of the vehicle, make sure it is securely supported, and allow the front wheels to rotate freely. Or raise the vehicle.

3. Start the engine, and turn the VSA off (the light on the VSA OFF switch comes on). Run the engine in the D position until the vehicle speed reaches 35 mph (56 km/h), then slow down and stop the wheels.

4. Monitor the OBD STATUS for P0706 in the DTCs/ Freeze Data in A/T Mode Menu for a pass/fail.

   Does the HDS indicate FAILED?

   YES—Go to step 5.

   NO—Intermittent failure, the system is OK at this time. Check for poor connections or loose terminals at the transmission range switch and the PCM. If the HDS indicates NOT COMPLETED, return to step 3 and recheck.

5. Turn the ignition switch OFF.

6. Inspect the transmission range switch (see page 14-292).

   Is the switch OK?

   YES—Go to step 7.

   NO—Replace the transmission range switch (see page 14-294), then go to step 31.

7. Make sure the transmission range switch is installed correctly (see page 14-294), and adjust the shift cable (see page 14-286).

8. Clear the DTC with the HDS.

9. Start the engine, and turn the VSA off (the light on the VSA OFF switch comes on). Run the engine in the D position until the vehicle speed reaches 35 mph (56 km/h), then slow down and stop the wheels.

10. Monitor the OBD STATUS for P0706 in the DTCs/ Freeze Data in A/T Mode Menu for a pass/fail.

    Does the HDS indicate FAILED?

    YES—Go to step 11.

    NO—Intermittent failure, the system is OK at this time. Check for poor connections or loose terminals at the transmission range switch and the PCM. If the HDS indicates NOT COMPLETED, return to step 9 and recheck.

11. Shift to the D position, and verify the ATP FWD and ATP D inputs with the HDS in the A/T data list.

    Is ATP FWD and ATP D ON?

    YES—Go to step 12.

    NO—Go to step 17.

12. Shift to the 2 position, and verify the ATF FWD and ATP 2 inputs with the HDS in the A/T data list.

    Is ATP FWD and ATP 2 ON?

    YES—Go to step 13.

    NO—Go to step 17.

13. Shift to the 1 position, and verify the ATF FWD and ATP 1 inputs with the HDS in the A/T data list.

    Is ATP FWD and ATP 1 ON?

    YES—Go to step 14.

    NO—Go to step 17.

(cont'd)

DTC Troubleshooting (cont'd)

14. Clear the DTC with the HDS.
15. Start the engine, and turn the VSA off (the light on the VSA OFF switch comes on). Run the engine in the D position until the vehicle speed reaches 35 mph (56 km/h), then slow down and stop the wheels.
16. Monitor the OBD STATUS for P0706 in the DTCs/ Freeze Data in A/T Mode Menu for a pass/fail.

    Does the HDS indicate FAILED?

    YES—Go to step 17.

    NO—Intermittent failure, the system is OK at this time. Check for poor connections or loose terminals at the transmission range switch and the PCM. If the HDS indicates NOT COMPLETED, return to step 15 and recheck.

17. Turn the ignition switch OFF.
18. Disconnect the transmission range switch connector.
19. Check for continuity between transmission range switch connector terminal No. 10 and body ground.

TRANSMISSION RANGE SWITCH CONNECTOR

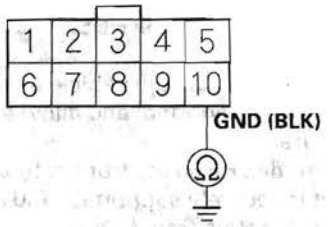

Wire side of female terminals

Is there continuity?

YES—Go to step 20.

NO—Repair open in the wire between the transmission range switch and ground (G101), or repair poor ground (G101), then go to step 31.

20. Turn the ignition switch ON (II).

21. Measure the voltage between transmission range switch connector terminals No. 5 and No. 10.

TRANSMISSION RANGE SWITCH CONNECTOR

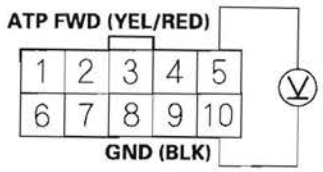

Wire side of female terminals

Is there voltage?

YES—Go to step 22.

NO—Repair open in the wire between the transmission range switch and PCM connector terminal B28, then go to step 31.

22. Measure the voltage between transmission range switch connector terminals No. 8 and No. 10.

TRANSMISSION RANGE SWITCH CONNECTOR

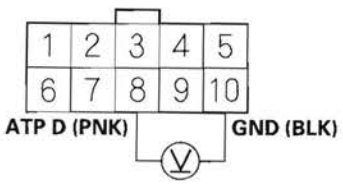

Wire side of female terminals

Is there voltage?

YES—Go to step 23.

NO—Repair open in the wire between the transmission range switch and PCM connector terminal B21, then go to step 31.

23. Measure the voltage between transmission range switch connector terminals No. 3 and No. 10.

TRANSMISSION RANGE SWITCH CONNECTOR

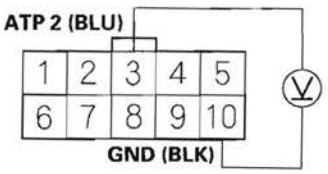

Wire side of female terminals

Is there voltage?

YES—Go to step 24.

NO—Repair open in the wire between the transmission range switch and PCM connector terminal B16, then go to step 31.

24. Measure the voltage between transmission range switch connector terminals No. 9 and No. 10.

TRANSMISSION RANGE SWITCH CONNECTOR

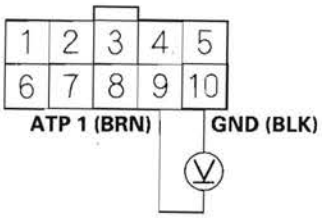

Wire side of female terminals

Is there voltage?

YES—Go to step 25.

NO—Repair open in the wire between the transmission range switch and PCM connector terminal B15, then go to step 31.

(cont'd)

DTC Troubleshooting (cont'd)

25. Update the A/T software in the PCM if it does not have the latest software (see page 14-9), or substitute a known-good PCM (see page 14-10).

26. Turn the ignition switch OFF.

27. 4WD model: Raise the vehicle on a lift, make sure it is securely supported, and allow all four wheels to rotate freely.
    2WD model: Raise the front of the vehicle, make sure it is securely supported, and allow the front wheels to rotate freely. Or raise the vehicle.

28. Start the engine, and turn the VSA off (the light on the VSA OFF switch comes on). Run the engine in the D position until the vehicle speed reaches 35 mph (56 km/h), then slow down and stop the wheels.

29. Check for DTC(s) in the DTCs/Freeze Data in A/T Mode Menu with the HDS.

    Is DTC P0706 indicated?

    YES—Check for poor connections and loose terminals at the transmission range switch and the PCM. If the PCM was updated, substitute a known-good PCM (see page 14-10), then recheck. If the PCM was substituted, go to step 1.

    NO—Go to step 30.

30. Monitor the OBD STATUS for P0706 in the DTCs/Freeze Data in A/T Mode Menu for a pass/fail.

    Does the HDS indicate PASSED?

    YES—If the PCM was updated, troubleshooting is complete. If the PCM was substituted, replace the original PCM (see page 11-219). If any other DTCs were indicated on step 29, go to the indicated DTC's troubleshooting. ■

    NO—If the HDS indicates FAILED, check for poor connections and loose terminals at the transmission range switch and the PCM. If the PCM was updated, substitute a known-good PCM (see page 14-10), then recheck. If the PCM was substituted, go to step 1. If the HDS indicates NOT COMPLETED, keep idling until a result comes on.

31. Clear the DTC with the HDS.

32. Turn the ignition switch OFF.

33. 4WD model: Raise the vehicle on a lift, make sure it is securely supported, and allow all four wheels to rotate freely.
    2WD model: Raise the front of the vehicle, make sure it is securely supported, and allow the front wheels to rotate freely. Or raise the vehicle.

34. Start the engine, and turn the VSA off (the light on the VSA OFF switch comes on). Run the engine in the D position until the vehicle speed reaches 35 mph (56 km/h), then slow down and stop the wheels.

35. Check for DTC(s) in the DTCs/Freeze Data in A/T Mode Menu with the HDS.

    Is DTC P0706 indicated?

    YES—Check for poor connections and loose terminals at the transmission range switch and the PCM, then go to step 1.

    NO—Go to step 36.

36. Monitor the OBD STATUS for P0706 in the DTCs/Freeze Data in A/T Mode Menu for a pass/fail.

    Does the HDS indicate PASSED?

    YES—Troubleshooting is complete. If any other DTCs were indicated on step 35, go to the indicated DTC's troubleshooting. ■

    NO—If the HDS indicates FAILED, check for poor connections and loose terminals at the transmission range switch and the PCM, then go to step 1. If the HDS indicates NOT COMPLETED, return to step 34 and recheck.

DTC P0711: Problem in ATF Temperature Sensor Circuit

NOTE:
- Before you troubleshoot, record all freeze data and any on-board snapshot, and review General Troubleshooting Information (see page 14-4).
- This code is caused by an electrical circuit problem and cannot be caused by a mechanical problem in the transmission.

1. Check the ATF temperature with the HDS in the A/T data list.

   Does the ATF temperature exceed the ambient-air temperature?

   YES—Record the ATF temperature. Leave the engine off for more than 30 minutes, and go to step 2.

   NO—Record the ATF temperature. Test the stall speed RPM (see page 14-213) three times. Go to step 2 after stall speed testing.

2. Check the ATF temperature with the HDS.

   Does the ATF temperature change?

   YES—Leave the engine off for more than 30 minutes, and go to step 3.

   NO—Replace the ATF temperature sensor (see page 14-235), then go to step 5.

3. Check the ECT SENSOR with the HDS.

   Is the ECT SENSOR equal to the ambient-air temperature?

   YES—Go to step 4.

   NO—Leave the engine off until the ECT SENSOR reads the same as ambient-air temperature, then go to step 4.

4. Check the ATF TEMP SENSOR with the HDS.

   Does the ATF temperature read about the same as the ECT SENSOR?

   YES—Intermittent failure, the system is OK at this time. Check for poor connections or loose terminals at the ATF temperature sensor and the PCM. ■

   NO—Replace the ATF temperature sensor (see page 14-235), then go to step 5.

5. Clear the DTC with the HDS.

6. Test-drive the vehicle for several minutes in the D position through all five gears.

7. Check for DTC(s) in the DTCs/Freeze Data in A/T Mode Menu with the HDS.

   Is DTC P0711 indicated?

   YES—Check for poor connections and loose terminals at the ATF temperature sensor and the PCM, then go to step 1.

   NO—Go to step 8.

8. Monitor the OBD STATUS for P0711 in the DTCs/ Freeze Data in A/T Mode Menu for a pass/fail.

   Does the HDS indicate PASSED?

   YES—Troubleshooting is complete. If any other DTCs were indicated on step 7, go to the indicated DTC's troubleshooting. ■

   NO—If the HDS indicates FAILED, check for poor connections and loose terminals at the ATF temperature sensor and the PCM, then go to step 1. If the HDS indicates NOT COMPLETED, return to step 6 and recheck.

DTC Troubleshooting (cont'd)

DTC P0712: Short in ATF Temperature Sensor Circuit

NOTE:
- Before you troubleshoot, record all freeze data and any on-board snapshot, and review General Troubleshooting Information (see page 14-4).
- This code is caused by an electrical circuit problem and cannot be caused by a mechanical problem in the transmission.

1. Check the ATF temperature sensor voltage with the HDS in the A/T data list.

   Is the ATF TEMP SENSOR voltage 0.07 V or less?

   YES—Go to step 2.

   NO—Intermittent failure, the system is OK at this time. Check for an intermittent short in the ATFT wire between the ATF temperature sensor and the PCM. ■

2. Disconnect the shift solenoid harness connector at the shift solenoid valve cover.

3. Check the ATF TEMP SENSOR voltage with the HDS.

   Is the ATF TEMP SENSOR voltage 0.07 V or less?

   YES—Go to step 4.

   NO—Replace the ATF temperature sensor (see page 14-235), then go to step 13.

4. Turn the ignition switch OFF.

5. Jump the SCS line with the HDS.

6. Disconnect PCM connector B (44P).

7. Check for continuity between shift solenoid harness connector terminal No. 6 and body ground.

SHIFT SOLENOID HARNESS CONNECTOR

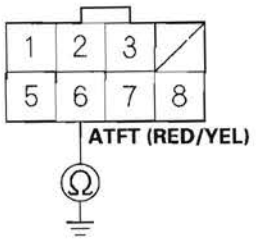

Wire side of female terminals

Is there continuity?

YES—Repair short in the wire between PCM connector terminal B27 and shift solenoid harness connector terminal No. 6, then go to step 13.

NO—Go to step 8.

8. Check for continuity between shift solenoid harness connector terminal No. 6 and body ground.

SHIFT SOLENOID HARNESS CONNECTOR

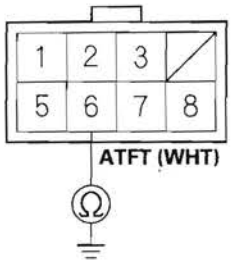

Terminal side of male terminals

Is there continuity?

YES—Replace the ATF temperature sensor-shift solenoid harness and connector (see page 14-235), then go to step 13.

NO—Go to step 9.

9. Update the A/T software in the PCM if it does not have the latest software (see page 14-9), or substitute a known-good PCM (see page 14-10).

10. Test-drive the vehicle for several minutes in the D position through all five gears.

11. Check for DTC(s) in the DTCs/Freeze Data in A/T Mode Menu with the HDS.

    Is DTC P0712 indicated?

    YES—If the PCM was updated, substitute a known-good PCM (see page 14-10), then recheck. If the PCM was substituted, go to step 1.

    NO—Go to step 12.

12. Monitor the OBD STATUS for P0712 in the DTCs/ Freeze Data in A/T Mode Menu for a pass/fail.

    Does the HDS indicate PASSED?

    YES—If the PCM was updated, troubleshooting is complete. If the PCM was substituted, replace the original PCM (see page 11-219). If any other DTCs were indicated on step 11, go to the indicated DTC's troubleshooting. ■

    NO—If the HDS indicates FAILED, check for poor connections and loose terminals at the ATF temperature sensor and the PCM. If the PCM was updated, substitute a known-good PCM (see page 14-10), then recheck. If the PCM was substituted, go to step 1. If the HDS indicates NOT COMPLETED, return to step 9 and recheck.

13. Clear the DTC with the HDS.

14. Test-drive the vehicle for several minutes in the D position through all five gears.

15. Check for DTC(s) in the DTCs/Freeze Data in A/T Mode Menu with the HDS.

    Is DTC P0712 indicated?

    YES—Check for poor connections and loose terminals at the ATF temperature sensor and the PCM, then go to step 1.

    NO—Go to step 16.

16. Monitor the OBD STATUS for P0712 in the DTCs/ Freeze Data in A/T Mode Menu for a pass/fail.

    Does the HDS indicate PASSED?

    YES—Troubleshooting is complete. If any other DTCs were indicated on step 15, go to the indicated DTC's troubleshooting. ■

    NO—If the HDS indicates FAILED, go to step 1. If the HDS indicates NOT COMPLETED, return to step 14 and recheck.

DTC Troubleshooting (cont'd)

DTC P0713: Open in ATF Temperature Sensor Circuit

NOTE:
- Before you troubleshoot, record all freeze data and any on-board snapshot, and review General Troubleshooting Information (see page 14-4).
- This code is caused by an electrical circuit problem and cannot be caused by a mechanical problem in the transmission.

1. Check the ATF TEMP SENSOR voltage with the HDS in the A/T data list.

   Does the ATF TEMP SENSOR voltage exceed 4.93 V?

   YES—Go to step 2.

   NO—Intermittent failure, the system is OK at this time. Check for poor connections or loose terminals at the ATF temperature sensor and the PCM. ■

2. Turn the ignition switch OFF.

3. Disconnect the shift solenoid harness connector at the shift solenoid valve cover.

4. Turn the ignition switch ON (II).

5. Measure the voltage between shift solenoid harness connector terminal No. 6 and body ground.

SHIFT SOLENOID HARNESS CONNECTOR

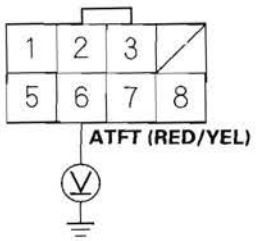

Wire side of female terminals

Is there about 5 V?

YES—Go to step 6.

NO—Go to step 7.

6. Measure the voltage between shift solenoid harness connector terminals No. 6 and No. 7.

SHIFT SOLENOID HARNESS CONNECTOR

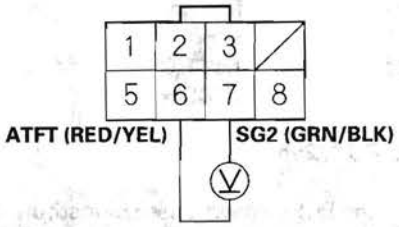

Wire side of female terminals

Is there about 5 V?

YES—Replace the ATF temperature sensor-shift solenoid harness and connector (see page 14-235), then go to step 16.

NO—Repair open in SG2 wire between PCM connector terminal B33 and the shift solenoid harness connector, then go to step 16.

7. Turn the ignition switch OFF.

8. Jump the SCS line with the HDS.

9. Disconnect PCM connector B (44P).

10. Check for continuity between PCM connector terminal B27 and shift solenoid harness connector terminal No. 6.

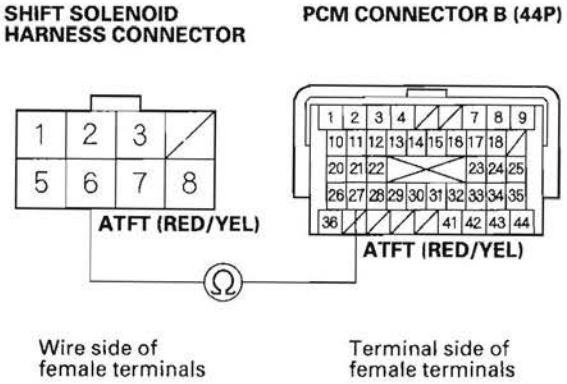

Is there continuity?

YES—Go to step 11.

NO—Repair open in the wire between PCM connector terminal B27 and the shift solenoid harness connector, then go to step 16.

11. Connect the shift solenoid harness connector.

12. Update the A/T software in the PCM if it does not have the latest software (see page 14-9), or substitute a known-good PCM (see page 14-10).

13. Test-drive the vehicle for several minutes in the D position through all five gears.

14. Check for DTC(s) in the DTCs/Freeze Data in A/T Mode Menu with the HDS.

    Is DTC P0713 indicated?

    YES—If the PCM was updated, substitute a known-good PCM (see page 14-10), then recheck. If the PCM was substituted, go to step 1.

    NO—Go to step 15.

15. Monitor the OBD STATUS for P0713 in the DTCs/ Freeze Data in A/T Mode Menu for a pass/fail.

    Does the HDS indicate PASSED?

    YES—If the PCM was updated, troubleshooting is complete. If the PCM was substituted, replace the original PCM (see page 11-219). If any other DTCs were indicated on step 14, go to the indicated DTC's troubleshooting. ■

    NO—If the HDS indicates FAILED, check for poor connections and loose terminals at the shift solenoid harness connector (ATF temperature sensor) and the PCM. If the PCM was updated, substitute a known-good PCM (see page 14-10), then recheck. If the PCM was substituted, go to step 1. If the HDS indicates NOT COMPLETED, return to step 13 and recheck.

(cont'd)

DTC Troubleshooting (cont'd)

16. Connect the shift solenoid harness connector.

17. Clear the DTC with the HDS.

18. Test-drive the vehicle for several minutes in the D position through all five gears.

19. Check for DTC(s) in the DTCs/Freeze Data in A/T Mode Menu with the HDS.

    Is DTC P0713 indicated?

    YES—Check for poor connections and loose terminals at the shift solenoid harness connector (ATF temperature sensor) and the PCM, then go to step 1.

    NO—Go to step 20.

20. Monitor the OBD STATUS for P0713 in the DTCs/ Freeze Data in A/T Mode Menu for a pass/fail.

    Does the HDS indicate PASSED?

    YES—Troubleshooting is complete. If any other DTCs were indicated on step 19, go to the indicated DTC's troubleshooting. ■

    NO—If the HDS indicates FAILED, check for poor connections and loose terminals at the shift solenoid harness connector (ATF temperature sensor) and the PCM, then go to step 1. If the HDS indicates NOT COMPLETED, return to step 18 and recheck.

DTC P0716: Problem in Input Shaft (Mainshaft) Speed Sensor Circuit

DTC P0717: Problem in Input Shaft (Mainshaft) Speed Sensor Circuit (No Signal Input)

NOTE:
- Before you troubleshoot, record all freeze data and any on-board snapshot, and review General Troubleshooting Information (see page 14-4).
- This code is caused by an electrical circuit problem and cannot be caused by a mechanical problem in the transmission.

1. Clear the DTC with the HDS.

2. 4WD model: Raise the vehicle on a lift, make sure it is securely supported, and allow all four wheels to rotate freely.
   2WD model: Raise the front of the vehicle, make sure it is securely supported, and allow the front wheels to rotate freely. Or raise the vehicle.

3. Check for proper input shaft (mainshaft) speed sensor installation (see page 14-233). If the sensor is installed incorrectly, reinstall the sensor correctly, then go to step 36.

4. Start the engine, and turn the VSA off (the light on the VSA OFF switch comes on). Run the engine in the D position, and hold the vehicle at speeds over 35 mph (56 km/h) for more than 10 seconds. Slow down and stop the wheel.

5. Monitor the OBD STATUS for P0716 or P0717 in the DTCs/Freeze Data in A/T Mode Menu for a pass/fail.

   Does the HDS indicate FAILED?

   YES—Go to step 6.

   NO—Intermittent failure, the system is OK at this time. Check for poor connections or loose terminals at the input shaft (mainshaft) speed sensor and the PCM. If the HDS indicates NOT COMPLETED, return to step 4 and recheck.

6. Turn the ignition switch OFF.

7. Jump the SCS line with the HDS.

8. Disconnect PCM connector C (44P).

9. Check for continuity between PCM connector terminals C40 and body ground, and between C44 and body ground.

PCM CONNECTOR C (44P)

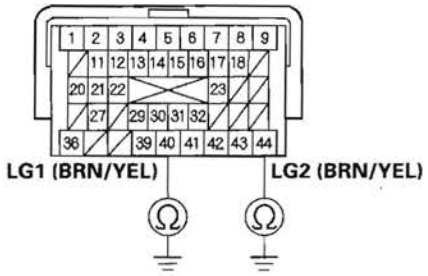

Terminal side of female terminals

Is there continuity?

YES—Go to step 10.

NO—Repair open in the wires between PCM connector terminals C40, C44 and ground (G101), or repair poor ground (G101), then go to step 36.

(cont'd)

DTC Troubleshooting (cont'd)

10. Connect PCM connector C (44P).
11. Disconnect the input shaft (mainshaft) speed sensor connector.
12. Turn the ignition switch ON (II).
13. Measure the voltage between input shaft (mainshaft) speed sensor connector terminal No. 1 and body ground.

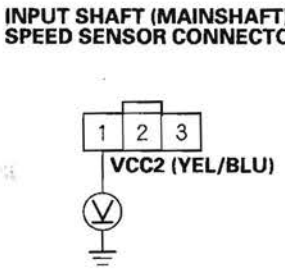

Wire side of female terminals

Is there about 5 V?

YES—Go to step 18.

NO—Go to step 14.

14. Turn the ignition switch OFF.
15. Disconnect PCM connector B (44P).
16. Check for continuity between PCM connector terminal B18 and input shaft (mainshaft) speed sensor connector terminal No. 1.

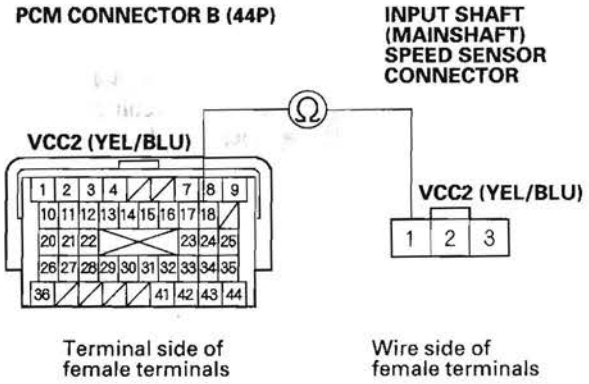

Is there continuity?

YES—Go to step 17.

NO—Repair open in the wire between PCM connector terminal B18 and the input shaft (mainshaft) speed sensor, then go to step 36.

17. Check for continuity between PCM connector terminal B18 and body ground.

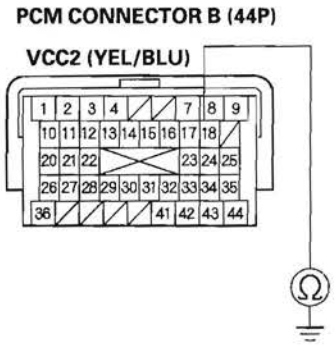

Terminal side of female terminals

Is there continuity?

YES—Repair short in the wire between PCM connector terminal B18 and the input shaft (mainshaft) speed sensor, then go to step 36.

NO—Go to step 32.

18. Turn the ignition switch OFF.

19. Disconnect PCM connector B (44P).

20. Check for continuity between input shaft (mainshaft) speed sensor connector terminal No. 2 and body ground.

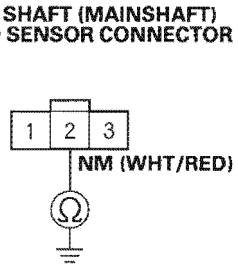

Wire side of female terminals

Is there continuity?

YES—Repair short in the wire between PCM connector terminal B17 and the input shaft (mainshaft) speed sensor connector, then go to step 36.

NO—Go to step 21.

21. Check for continuity between PCM connector terminal B33 and input shaft (mainshaft) speed sensor connector terminal No. 3.

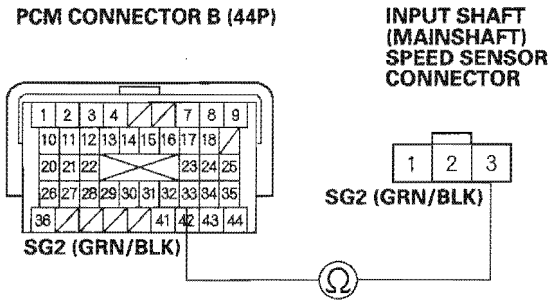

Terminal side of female terminals

Wire side of female terminals

Is there continuity?

YES—Go to step 22.

NO—Repair open in the wire between the input shaft (mainshaft) speed sensor connector and PCM connector terminal B33, then go to step 36.

22. Connect PCM connector B (44P).

23. Turn the ignition switch ON (II).

24. Measure the voltage between input shaft (mainshaft) speed sensor connector terminals No. 2 and No. 3.

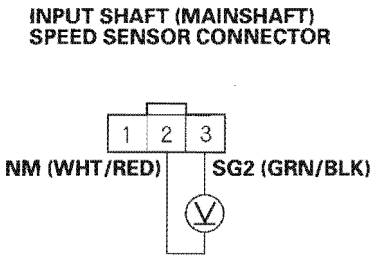

Wire side of female terminals

Is there about 5 V?

YES—Go to step 25.

NO—Go to step 29.

(cont'd)

DTC Troubleshooting (cont'd)

25. Connect the input shaft (mainshaft) speed sensor connector.

26. Clear the DTC with the HDS.

27. Start the engine, and turn the VSA off (the light on the VSA OFF switch comes on). Run the engine in the D position, and hold the vehicle at speeds over 35 mph (56 km/h) for more than 10 seconds. Slow down and stop the wheel.

28. Monitor the OBD STATUS for P0716 or P0717 in the DTCs/Freeze Data in A/T Mode Menu for a pass/fail.

    Does the HDS indicate FAILED?

    YES—Replace the input shaft (mainshaft) speed sensor (see page 14-233), then go to step 36.

    NO—Go to step 32.

29. Turn the ignition switch OFF.

30. Disconnect PCM connector B (44P).

31. Check for continuity between PCM connector terminal B17 and input shaft (mainshaft) speed sensor connector terminal No. 2.

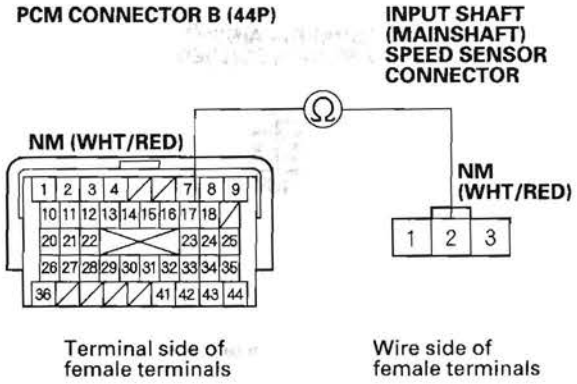

    Is there continuity?

    YES—Go to step 32.

    NO—Repair open in the wire between PCM connector terminal B17 and the input shaft (mainshaft) speed sensor, then go to step 36.

32. Update the A/T software in the PCM if it does not have the latest software (see page 14-9), or substitute a known-good PCM (see page 14-10).

33. Start the engine, and turn the VSA off (the light on the VSA OFF switch comes on). Run the engine in the D position, and hold the vehicle at speeds over 35 mph (56 km/h) for more than 10 seconds. Slow down and stop the wheel.

34. Check for DTC(s) in the DTCs/Freeze Data in A/T Mode Menu with the HDS.

    Is DTC P0716 or P0717 indicated?

    YES—If the PCM was updated, substitute a known-good PCM (see page 14-10), then recheck. If the PCM was substituted, go to step 1.

    NO—Go to step 35.

35. Monitor the OBD STATUS for P0716 or P0717 in the DTCs/Freeze Data in A/T Mode Menu for a pass/fail.

    Does the HDS indicate PASSED?

    YES—If the PCM was updated, troubleshooting is complete. If the PCM was substituted, replace the original PCM (see page 11-219). If any other DTCs were indicated on step 34, go to the indicated DTC's troubleshooting. ■

    NO—If the HDS indicates FAILED, check for poor connections and loose terminals at the input shaft (mainshaft) speed sensor and the PCM. If the PCM was updated, substitute a known-good PCM (see page 14-10), then recheck. If the PCM was substituted, go to step 1. If the HDS indicates NOT COMPLETED, return to step 33 and recheck.

36. Clear the DTC with the HDS.

37. Start the engine, and turn the VSA off (the light on the VSA OFF switch comes on). Run the engine in the D position, and hold the vehicle at speeds over 35 mph (56 km/h) for more than 10 seconds. Slow down and stop the wheel.

38. Check for DTC(s) in the DTCs/Freeze Data in A/T Mode Menu with the HDS.

    Is DTC P0716 or P0717 indicated?

    YES—Check for poor connections and loose terminals at the input shaft (mainshaft) speed sensor and the PCM, then go to step 1.

    NO—Go to step 39.

39. Monitor the OBD STATUS for P0716 or P0717 in the DTCs/Freeze Data in A/T Mode Menu for a pass/fail.

    Does the HDS indicate PASSED?

    YES—Troubleshooting is complete. If any other DTCs were indicated on step 38, go to the indicated DTC's troubleshooting. ■

    NO—If the HDS indicates FAILED, check for poor connections and loose terminals at the input shaft (mainshaft) speed sensor and the PCM, then go to step 1. If the HDS indicates NOT COMPLETED, return to step 37 and recheck.

DTC Troubleshooting (cont'd)

DTC P0718: Input Shaft (Mainshaft) Speed Sensor Intermittent Failure

NOTE:
- Before you troubleshoot, record all freeze data and any on-board snapshot, and review General Troubleshooting Information (see page 14-4).
- This code is caused by an electrical circuit problem and cannot be caused by a mechanical problem in the transmission.

1. Clear the DTC with the HDS.
2. Test-drive the vehicle for several minutes in the D position through all five gears.
3. Monitor the OBD STATUS for P0718 in the DTCs/ Freeze Data in A/T Mode Menu for a pass/fail.

   Does the HDS indicate FAILED?

   YES—Go to step 4.

   NO—Intermittent failure, the system is OK at this time. Check for poor connections or loose terminals at the input shaft (mainshaft) speed sensor and the PCM. If the HDS indicates NOT COMPLETED, return to step 2 and recheck.
4. Turn the ignition switch OFF.
5. Disconnect the input shaft (mainshaft) speed sensor connector, and inspect the connector and connector terminals to be sure they are making good contact.

   Are the connector terminals OK?

   YES—Go to step 6.

   NO—Repair the connector terminals, then go to step 6.
6. Connect the input shaft (mainshaft) speed sensor connector.
7. Test-drive the vehicle for several minutes in the D position through all five gears.
8. Monitor the OBD STATUS for P0718 in the DTCs/ Freeze Data in A/T Mode Menu for a pass/fail.

   Does the HDS indicate FAILED?

   YES—Go to step 9.

   NO—Troubleshooting is complete. If the HDS indicates NOT COMPLETED, return to step 7 and recheck.
9. Turn the ignition switch OFF.
10. Jump the SCS line with the HDS.
11. Disconnect PCM connector C (44P).
12. Check for continuity between PCM connector terminals C40 and body ground, and between C44 and body ground.

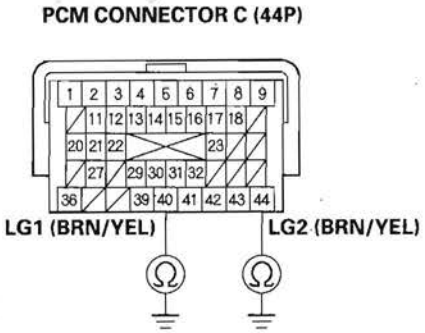

Terminal side of female terminals

Is there continuity?

YES—Go to step 13.

NO—Repair open in the wires between PCM connector terminals C40, C44 and ground (G101), or repair poor ground (G101), then go to step 34.

13. Connect PCM connector C (44P).
14. Disconnect the input shaft (mainshaft) speed sensor connector.
15. Turn the ignition switch ON (II).
16. Measure the voltage between input shaft (mainshaft) speed sensor connector terminal No. 1 and body ground.

INPUT SHAFT (MAINSHAFT) SPEED SENSOR CONNECTOR

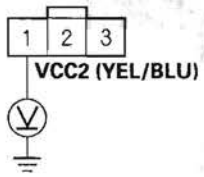

Wire side of female terminals

Is there about 5 V?

YES—Go to step 17.

NO—Go to step 26.

17. Turn the ignition switch OFF.
18. Disconnect PCM connector B (44P).
19. Check for continuity between input shaft (mainshaft) speed sensor connector terminal No. 2 and body ground.

INPUT SHAFT (MAINSHAFT) SPEED SENSOR CONNECTOR

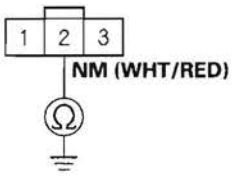

Wire side of female terminals

Is there continuity?

YES—Repair short in the wire between PCM connector terminal B17 and the input shaft (mainshaft) speed sensor connector, then go to step 34.

NO—Go to step 20.

20. Connect PCM connector B (44P).
21. Turn the ignition switch ON (II).

(cont'd)

DTC Troubleshooting (cont'd)

22. Measure the voltage between input shaft (mainshaft) speed sensor connector terminal No. 2 and body ground.

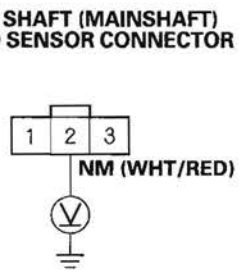

Wire side of female terminals

Is there about 5 V?

YES—Replace the input shaft (mainshaft) speed sensor (see page 14-233), then go to step 34.

NO—Go to step 23.

23. Turn the ignition switch OFF.

24. Disconnect PCM connector B (44P).

25. Check for continuity between PCM connector terminal B17 and input shaft (mainshaft) speed sensor connector terminal No. 2.

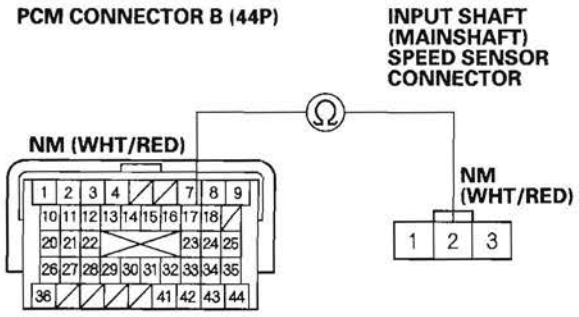

Terminal side of female terminals

Wire side of female terminals

Is there continuity?

YES—Go to step 30.

NO—Repair open in the wire between PCM connector terminal B17 and the input shaft (mainshaft) speed sensor, then go to step 34.

26. Turn the ignition switch OFF.

27. Disconnect PCM connector B (44P).

28. Check for continuity between PCM connector terminal B18 and input shaft (mainshaft) speed sensor connector terminal No. 1.

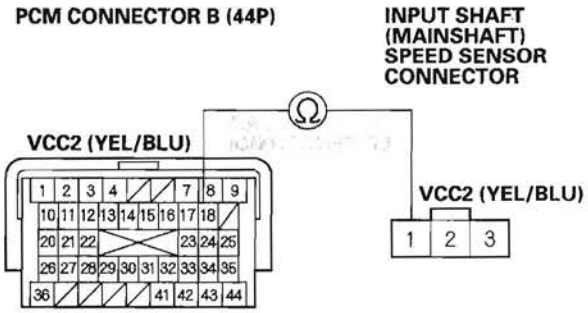

Terminal side of female terminals

Wire side of female terminals

Is there continuity?

YES—Go to step 29.

NO—Repair open in the wire between PCM connector terminal B18 and the input shaft (mainshaft) speed sensor, then go to step 34.

29. Check for continuity between PCM connector terminal B18 and body ground.

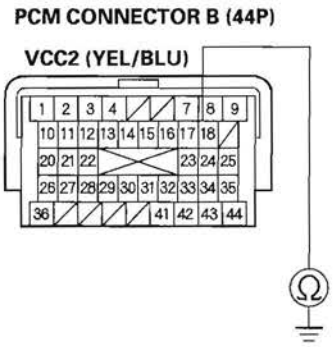

Terminal side of female terminals

Is there continuity?

YES—Repair short in the wire between PCM connector terminal B18 and the input shaft (mainshaft) speed sensor, then go to step 34.

NO—Go to step 30.

30. Update the A/T software in the PCM if it does not have the latest software (see page 14-9), or substitute a known-good PCM (see page 14-10).

31. Test-drive the vehicle for several minutes in the D position through all five gears.

32. Check for DTC(s) in the DTCs/Freeze Data in A/T Mode Menu with the HDS.

    Is DTC P0718 indicated?

    YES—If the PCM was updated, substitute a known-good PCM (see page 14-10), then recheck. If the PCM was substituted, go to step 1.

    NO—Go to step 33.

33. Monitor the OBD STATUS for P0718 in the DTCs/ Freeze Data in A/T Mode Menu for a pass/fail.

    Does the HDS indicate PASSED?

    YES—If the PCM was updated, troubleshooting is complete. If the PCM was substituted, replace the original PCM (see page 11-219). If any other DTCs were indicated on step 32, go to the indicated DTC's troubleshooting.■

    NO—If the HDS indicates FAILED, check for poor connections and loose terminals at the input shaft (mainshaft) speed sensor and the PCM. If the PCM was updated, substitute a known-good PCM (see page 14-10), then recheck. If the PCM was substituted, go to step 1. If the HDS indicates NOT COMPLETED, return to step 31 and recheck.

34. Clear the DTC with the HDS.

35. Test-drive the vehicle for several minutes in the D position through all five gears.

36. Check for DTC(s) in the DTCs/Freeze Data in A/T Mode Menu with the HDS.

    Is DTC P0718 indicated?

    YES—Check for poor connections and loose terminals at the input shaft (mainshaft) speed sensor and the PCM, then go to step 1.

    NO—Go to step 37.

37. Monitor the OBD STATUS for P0718 in the DTCs/ Freeze Data in A/T Mode Menu for a pass/fail.

    Does the HDS indicate PASSED?

    YES—Troubleshooting is complete. If any other DTCs were indicated on step 36, go to the indicated DTC's troubleshooting.■

    NO—If the HDS indicates FAILED, check for poor connections and loose terminals at the input shaft (mainshaft) speed sensor and the PCM, then go to step 1. If the HDS indicates NOT COMPLETED, return to step 35 and recheck.

DTC Troubleshooting (cont'd)

DTC P0721: Problem in Output Shaft (Countershaft) Speed Sensor Circuit

DTC P0722: Problem in Output Shaft (Countershaft) Speed Sensor Circuit (No Signal Input)

NOTE:
- Before you troubleshoot, record all freeze data and any on-board snapshot, and review General Troubleshooting Information (see page 14-4).
- This code is caused by an electrical circuit problem and cannot be caused by a mechanical problem in the transmission.

1. Clear the DTC with the HDS.
2. 4WD model: Raise the vehicle on a lift, make sure it is securely supported, and allow all four wheels to rotate freely.
   2WD model: Raise the front of the vehicle, make sure it is securely supported, and allow the front wheels to rotate freely. Or raise the vehicle.
3. Check for proper output shaft (countershaft) speed sensor installation (see page 14-233). If the sensor is installed incorrectly, reinstall the sensor correctly, then go to step 36.
4. Start the engine, and turn the VSA off (the light on the VSA OFF switch comes on). Run the vehicle in the D position with engine speed 2,000 rpm or higher for more than 10 seconds. Slow down and stop the wheel.
5. Monitor the OBD STATUS for P0721 or P0722 in the DTCs/Freeze Data in A/T Mode Menu for a pass/fail.

   Does the HDS indicate FAILED?

   YES—Go to step 6.

   NO—Intermittent failure, the system is OK at this time. Check for poor connections or loose terminals at the output shaft (countershaft) speed sensor and the PCM. If the HDS indicates NOT COMPLETED, return to step 4 and recheck.
6. Turn the ignition switch OFF.
7. Jump the SCS line with the HDS.
8. Disconnect PCM connector C (44P).
9. Check for continuity between PCM connector terminals C40 and body ground, and between C44 and body ground.

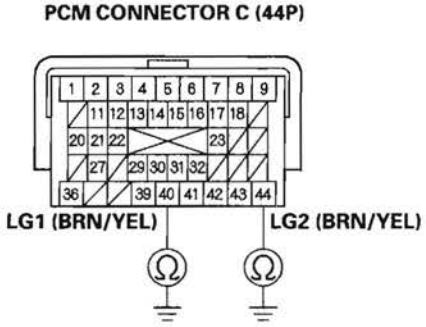

Terminal side of female terminals

Is there continuity?

YES—Go to step 10.

NO—Repair open in the wires between PCM connector terminals C40, C44 and ground (G101), or repair poor ground (G101), then go to step 36.

10. Connect PCM connector C (44P).

11. Disconnect the output shaft (countershaft) speed sensor connector.

12. Turn the ignition switch ON (II).

13. Measure the voltage between output shaft (countershaft) speed sensor connector terminal No. 1 and body ground.

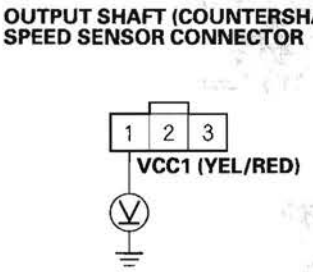

Wire side of female terminals

Is there about 5 V?

YES—Go to step 18.

NO—Go to step 14.

14. Turn the ignition switch OFF.

15. Disconnect PCM connector C (44P).

16. Check for continuity between PCM connector terminal C13 and output shaft (countershaft) speed sensor connector terminal No. 1.

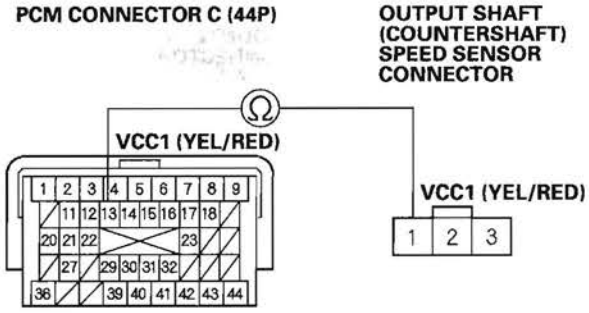

Terminal side of female terminals

Wire side of female terminals

Is there continuity?

YES—Go to step 17.

NO—Repair open in the wire between PCM connector terminal C13 and the output shaft (countershaft) speed sensor, then go to step 36.

17. Check for continuity between PCM connector terminal C13 and body ground.

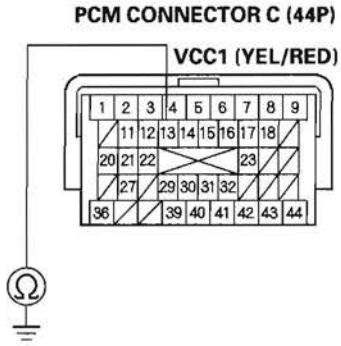

Terminal side of female terminals

Is there continuity?

YES—Repair short in the wire between PCM connector terminal C13 and the output shaft (countershaft) speed sensor, then go to step 36.

NO—Go to step 32.

(cont'd)

DTC Troubleshooting (cont'd)

18. Turn the ignition switch OFF.
19. Disconnect PCM connector C (44P).
20. Check for continuity between output shaft (countershaft) speed sensor connector terminal No. 2 and body ground.

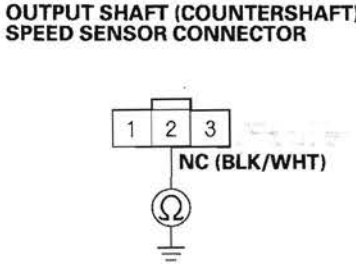

Wire side of female terminals

Is there continuity?

YES—Repair short in the wire between PCM connector terminal C43 and the output shaft (countershaft) speed sensor connector, then go to step 36.

NO—Go to step 21.

21. Check for continuity between PCM connector terminal C14 and output shaft (countershaft) speed sensor connector terminal No. 3.

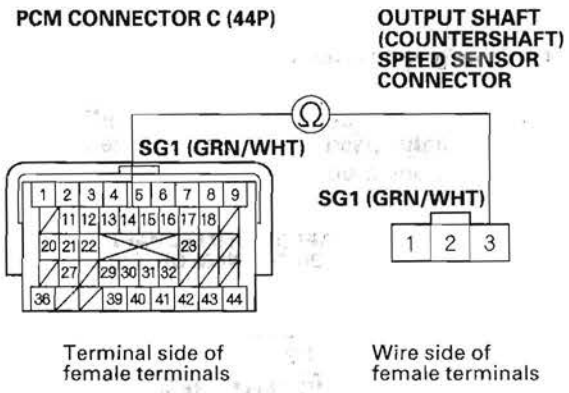

Is there continuity?

YES—Go to step 22.

NO—Repair open in the wire between the output shaft (countershaft) speed sensor connector and PCM connector terminal C14, then go to step 36.

22. Connect PCM connector C (44P).
23. Turn the ignition switch ON (II).
24. Measure the voltage between output shaft (countershaft) speed sensor connector terminals No. 2 and No. 3.

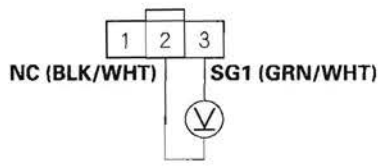

Wire side of female terminals

Is there about 5 V?

YES—Go to step 25.

NO—Go to step 29.

25. Connect the output shaft (countershaft) speed sensor connector.
26. Clear the DTC with the HDS.
27. Start the engine, and turn the VSA off (the light on the VSA OFF switch comes on). Run the vehicle in the D position with engine speed 2,000 rpm or higher for more than 10 seconds. Slow down and stop the wheel.
28. Monitor the OBD STATUS for P0721 or P0722 in the DTCs/Freeze Data in A/T Mode Menu for a pass/fail.

    Does the HDS indicate FAILED?

    YES—Replace the output shaft (countershaft) speed sensor (see page 14-233), then go to step 36.

    NO—Go to step 32.

29. Turn the ignition switch OFF.
30. Disconnect PCM connector C (44P).
31. Check for continuity between PCM connector terminal C43 and output shaft (countershaft) speed sensor connector terminal No. 2.

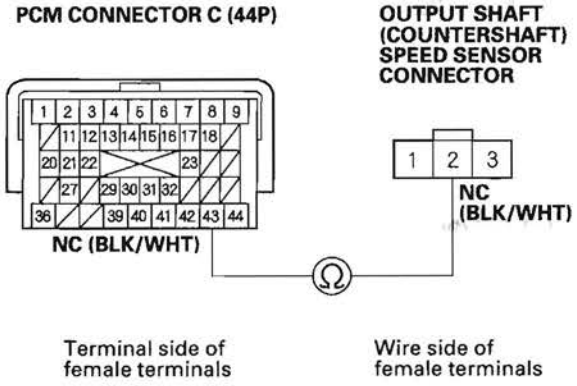

Is there continuity?

YES—Go to step 32.

NO—Repair open in the wire between PCM connector terminal C43 and the output shaft (countershaft) speed sensor, then go to step 36.

(cont'd)

DTC Troubleshooting (cont'd)

32. Update the A/T software in the PCM if it does not have the latest software (see page 14-9), or substitute a known-good PCM (see page 14-10).

33. Start the engine, and turn the VSA off (the light on the VSA OFF switch comes on). Run the vehicle in the D position with engine speed 2,000 rpm or higher for more than 10 seconds. Slow down and stop the wheel.

34. Check for DTC(s) in the DTCs/Freeze Data in A/T Mode Menu with the HDS.

    Is DTC P0721 or P0722 indicated?

    YES—If the PCM was updated, substitute a known-good PCM (see page 14-10), then recheck. If the PCM was substituted, go to step 1.

    NO—Go to step 35.

35. Monitor the OBD STATUS for P0721 or P0722 in the DTCs/Freeze Data in A/T Mode Menu for a pass/fail.

    Does the HDS indicate PASSED?

    YES—If the PCM was updated, troubleshooting is complete. If the PCM was substituted, replace the original PCM (see page 11-219). If any other DTCs were indicated on step 34, go to the indicated DTC's troubleshooting.■

    NO—If the HDS indicates FAILED, check for poor connections and loose terminals at the output shaft (countershaft) speed sensor and the PCM. If the PCM was updated, substitute a known-good PCM (see page 14-10), then recheck. If the PCM was substituted, go to step 1. If the HDS indicates NOT COMPLETED, return to step 33 and recheck.

36. Clear the DTC with the HDS.

37. Start the engine, and turn the VSA off (the light on the VSA OFF switch comes on). Run the vehicle in the D position with engine speed 2,000 rpm or higher for more than 10 seconds. Slow down and stop the wheel.

38. Check for DTC(s) in the DTCs/Freeze Data in A/T Mode Menu with the HDS.

    Is DTC P0721 or P0722 indicated?

    YES—Check for poor connections and loose terminals at the output shaft (countershaft) speed sensor and the PCM, then go to step 1.

    NO—Go to step 39.

39. Monitor the OBD STATUS for P0721 or P0722 in the DTCs/Freeze Data in A/T Mode Menu for a pass/fail.

    Does the HDS indicate PASSED?

    YES—Troubleshooting is complete. If any other DTCs were indicated on step 38, go to the indicated DTC's troubleshooting.■

    NO—If the HDS indicates FAILED, check for poor connections and loose terminals at the output shaft (countershaft) speed sensor and the PCM, then go to step 1. If the HDS indicates NOT COMPLETED, return to step 37 and recheck.

DTC P0723: Output Shaft (Countershaft) Speed Sensor Intermittent Failure

NOTE:
- Before you troubleshoot, record all freeze data and any on-board snapshot, and review General Troubleshooting Information (see page 14-4).
- This code is caused by an electrical circuit problem and cannot be caused by a mechanical problem in the transmission.

1. Clear the DTC with the HDS.
2. Test-drive the vehicle for several minutes in the D position through all five gears.
3. Monitor the OBD STATUS for P0723 in the DTCs/ Freeze Data in A/T Mode Menu for a pass/fail.

   Does the HDS indicate FAILED?

   YES—Go to step 4.

   NO—Intermittent failure, the system is OK at this time. Check for poor connections and loose terminals at the output shaft (countershaft) speed sensor and the PCM. If the HDS indicates NOT COMPLETED, return to step 2 and recheck.
4. Turn the ignition switch OFF.
5. Disconnect the output shaft (countershaft) speed sensor connector, and inspect the connector and connector terminals to be sure they are making good contact.

   Are the connector terminals OK?

   YES—Go to step 6.

   NO—Repair the connector terminals, then go to step 6.
6. Connect the output shaft (countershaft) speed sensor connector.
7. Test-drive the vehicle for several minutes in the D position through all five gears.
8. Monitor the OBD STATUS for P0723 in the DTCs/ Freeze Data in A/T Mode Menu for a pass/fail.

   Does the HDS indicate FAILED?

   YES—Go to step 9.

   NO—Troubleshooting is complete. If the HDS indicates NOT COMPLETED, return to step 7 and recheck.
9. Turn the ignition switch OFF.
10. Jump the SCS line with the HDS.
11. Disconnect PCM connector C (44P).
12. Check for continuity between PCM connector terminals C40 and body ground, and between C44 and body ground.

PCM CONNECTOR C (44P)

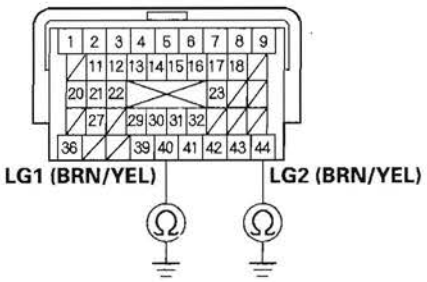

Terminal side of female terminals

Is there continuity?

YES—Go to step 13.

NO—Repair open in the wires between PCM connector terminals C40, C44 and ground (G101), or repair poor ground (G101), then go to step 34.

(cont'd)

DTC Troubleshooting (cont'd)

13. Connect PCM connector C (44P).
14. Disconnect the output shaft (countershaft) speed sensor connector.
15. Turn the ignition switch ON (II).
16. Measure the voltage between output shaft (countershaft) speed sensor connector terminal No. 1 and body ground.

OUTPUT SHAFT (COUNTERSHAFT) SPEED SENSOR CONNECTOR

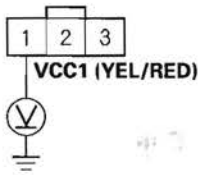

Wire side of female terminals

Is there about 5 V?

YES—Go to step 17.

NO—Go to step 26.

17. Turn the ignition switch OFF.
18. Disconnect PCM connector C (44P).
19. Check for continuity between output shaft (countershaft) speed sensor connector terminal No. 2 and body ground.

OUTPUT SHAFT (COUNTERSHAFT) SPEED SENSOR CONNECTOR

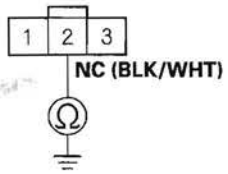

Wire side of female terminals

Is there continuity?

YES—Repair short in the wire between PCM connector terminal C43 and the output shaft (countershaft) speed sensor connector, then go to step 34.

NO—Go to step 20.

20. Connect PCM connector C (44P).
21. Turn the ignition switch ON (II).

22. Measure the voltage between output shaft (countershaft) speed sensor connector terminal No. 2 and body ground.

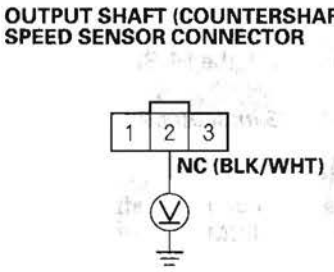

Is there about 5 V?

YES—Replace the output shaft (countershaft) speed sensor (see page 14-233), then go to step 34.

NO—Go to step 23.

23. Turn the ignition switch OFF.

24. Disconnect PCM connector C (44P).

25. Check for continuity between PCM connector terminal C43 and output shaft (countershaft) speed sensor connector terminal No. 2.

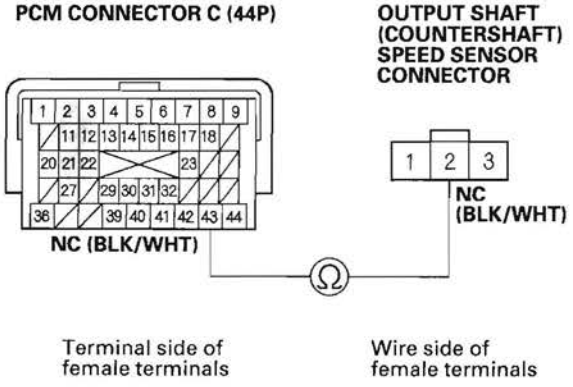

Is there continuity?

YES—Go to step 30.

NO—Repair open in the wire between PCM connector terminal C43 and the output shaft (countershaft) speed sensor, then go to step 34.

26. Turn the ignition switch OFF.

27. Disconnect PCM connector C (44P).

28. Check for continuity between PCM connector terminal C13 and output shaft (countershaft) speed sensor connector terminal No. 1.

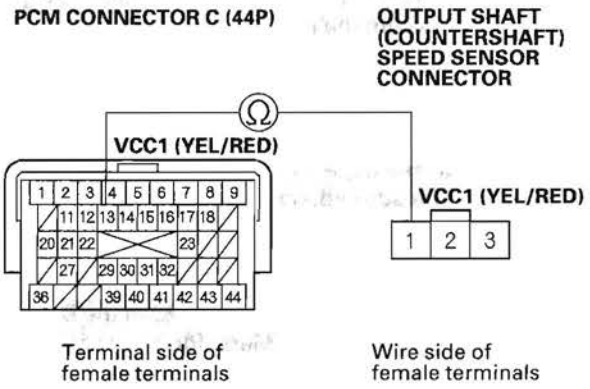

Is there continuity?

YES—Go to step 29.

NO—Repair open in the wire between PCM connector terminal C13 and the output shaft (countershaft) speed sensor, then go to step 34.

29. Check for continuity between PCM connector terminal C13 and body ground.

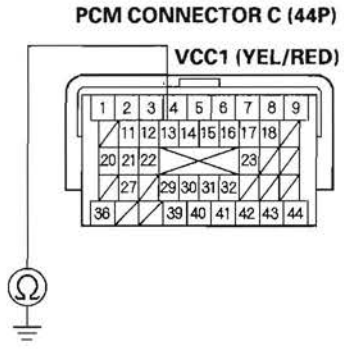

Is there continuity?

YES—Repair short in the wire between PCM connector terminal C13 and the output shaft (countershaft) speed sensor, then go to step 34.

NO—Go to step 30.

(cont'd)

DTC Troubleshooting (cont'd)

30. Update the A/T software in the PCM if it does not have the latest software (see page 14-9), or substitute a known-good PCM (see page 14-10).

31. Test-drive the vehicle for several minutes in the D position through all five gears.

32. Check for DTC(s) in the DTCs/Freeze Data in A/T Mode Menu with the HDS.

    Is DTC P0723 indicated?

    YES—If the PCM was updated, substitute a known-good PCM (see page 14-10), then recheck. If the PCM was substituted, go to step 1.

    NO—Go to step 33.

33. Monitor the OBD STATUS for P0723 in the DTCs/Freeze Data in A/T Mode Menu for a pass/fail.

    Does the HDS indicate PASSED?

    YES—If the PCM was updated, troubleshooting is complete. If the PCM was substituted, replace the original PCM (see page 11-219). If any other DTCs were indicated on step 32, go to the indicated DTC's troubleshooting. ■

    NO—If the HDS indicates FAILED, check for poor connections and loose terminals at the output shaft (countershaft) speed sensor and the PCM. If the PCM was updated, substitute a known-good PCM (see page 14-10), then recheck. If the PCM was substituted, go to step 1. If the HDS indicates NOT COMPLETED, return to step 31 and recheck.

34. Clear the DTC with the HDS.

35. Test-drive the vehicle for several minutes in the D position through all five gears.

36. Check for DTC(s) in the DTCs/Freeze Data in A/T Mode Menu with the HDS.

    Is DTC P0723 indicated?

    YES—Check for poor connections and loose terminals at the output shaft (countershaft) speed sensor and the PCM, then go to step 1.

    NO—Go to step 37.

37. Monitor the OBD STATUS for P0723 in the DTCs/Freeze Data in A/T Mode Menu for a pass/fail.

    Does the HDS indicate PASSED?

    YES—Troubleshooting is complete. If any other DTCs were indicated on step 36, go to the indicated DTC's troubleshooting. ■

    NO—If the HDS indicates FAILED, check for poor connections and loose terminals at the output shaft (countershaft) speed sensor and the PCM, then go to step 1. If the HDS indicates NOT COMPLETED, return to step 35 and recheck.

DTC P0731: Problem in 1st Clutch and 1st Clutch Hydraulic Circuit

NOTE: Before you troubleshoot, record all freeze data and any on-board snapshot, and review General Troubleshooting Information (see page 14-4).

1. Warm up the engine to normal operating temperature (the radiator fan comes on).
2. Make sure that the transmission is filled to the proper level, and check for fluid leaks.
3. Drain the ATF (see step 3 on page 14-239) through a strainer. Inspect the strainer for metal debris or excessive clutch material.

   Does the strainer have metal debris or excessive clutch material?

   YES—Replace the transmission, then go to step 10.

   NO—Replace the ATF (see step 5 on page 14-239), then go to step 4.
4. Measure the line pressure (see page 14-214).

   Is the line pressure within the service limits?

   YES—Go to step 5.

   NO—Repair the ATF pump and the regulator valve, or replace the transmission, then go to step 10.
5. Measure the 1st clutch pressure (see page 14-214).

   Is the 1st clutch pressure within the service limits?

   YES—Go to step 6.

   NO—Shift valves B and C are stuck. Repair these valves and hydraulic circuit, or replace the transmission, then go to step 10.
6. Test stall speed in the 1 position.

   Does the stall speed test within the service limits?

   YES—Go to step 7.

   NO—Shift valves A and D are stuck. Repair these valves and hydraulic circuit, or replace the transmission, then go to step 10.
7. Clear the DTC with the HDS.
8. Test-drive the vehicle for several minutes under the same conditions as those indicated by the freeze data, or run the vehicle in the 1 position at speeds over 10 mph (16 km/h) for 20 seconds. Slow down and stop the wheels.
9. Monitor the OBD STATUS for P0731 in the DTCs/ Freeze Data in A/T Mode Menu for a pass/fail.

   Does the HDS indicate FAILED?

   YES—Repair the 1st clutch, or replace the transmission, then go to step 10.

   NO—Intermittent failure, the system is OK at this time. If the HDS indicates NOT COMPLETED, return to step 8 and recheck.
10. Clear the DTC with the HDS.
11. Test-drive the vehicle for several minutes under the same conditions as those indicated by the freeze data, or run the vehicle in the 1 position at speeds over 10 mph (16 km/h) for 20 seconds. Slow down and stop the wheels.
12. Monitor the OBD STATUS for P0731 in the DTCs/ Freeze Data in A/T Mode Menu for a pass/fail.

    Does the HDS indicate PASSED?

    YES—Troubleshooting is complete.■

    NO—If the HDS indicates FAILED, return to step 1 and recheck. If the HDS indicates NOT COMPLETED, return to step 11 and recheck.

DTC Troubleshooting (cont'd)

DTC P0732: Problem in 2nd Clutch and 2nd Clutch Hydraulic Circuit

NOTE: Before you troubleshoot, record all freeze data and any on-board snapshot, and review General Troubleshooting Information (see page 14-4).

1. Warm up the engine to normal operating temperature (the radiator fan comes on).
2. Make sure that the transmission is filled to the proper level, and check for fluid leaks.
3. Drain the ATF (see step 3 on page 14-239) through a strainer. Inspect the strainer for metal debris or excessive clutch material.

   Does the strainer have metal debris or excessive clutch material?

   YES—Replace the transmission, then go to step 10.

   NO—Replace the ATF (see step 5 on page 14-239), then go to step 4.
4. Measure the line pressure (see page 14-214).

   Is the line pressure within the service limits?

   YES—Go to step 5.

   NO—Repair the ATF pump and the regulator valve, or replace the transmission, then go to step 10.
5. Measure the 2nd clutch pressure (see page 14-214).

   Is the 2nd clutch pressure within the service limits?

   YES—Go to step 6.

   NO—Shift valves A, B, and C are stuck. Repair these valves and the hydraulic circuit, or replace the transmission, then go to step 10.
6. Test stall speed in the 2 position.

   Does the stall speed test within the service limits?

   YES—Go to step 7.

   NO—Shift valve C is stuck. Repair shift valve C and hydraulic circuit, or replace the transmission, then go to step 10.
7. Clear the DTC with the HDS.
8. Test-drive the vehicle for several minutes under the same conditions as those indicated by the freeze data, or run the vehicle in the 2 position at speeds over 10 mph (16 km/h) for 20 seconds. Slow down and stop the wheels.
9. Monitor the OBD STATUS for P0732 in the DTCs/ Freeze Data in A/T Mode Menu for a pass/fail.

   Does the HDS indicate FAILED?

   YES—Repair the 2nd clutch, or replace the transmission, then go to step 10.

   NO—Intermittent failure, the system is OK at this time. If the HDS indicates NOT COMPLETED, return to step 8 and recheck.
10. Clear the DTC with the HDS.
11. Test-drive the vehicle for several minutes under the same conditions as those indicated by the freeze data, or run the vehicle in the 2 position at speeds over 10 mph (16 km/h) for 20 seconds. Slow down and stop the wheels.
12. Monitor the OBD STATUS for P0732 in the DTCs/ Freeze Data in A/T Mode Menu for a pass/fail.

    Does the HDS indicate PASSED?

    YES—Troubleshooting is complete. ■

    NO—If the HDS indicates FAILED, return to step 1 and recheck. If the HDS indicates NOT COMPLETED, return to step 11 and recheck.

DTC P0733: Problem in 3rd Clutch and 3rd Clutch Hydraulic Circuit

NOTE: Before you troubleshoot, record all freeze data and any on-board snapshot, and review General Troubleshooting Information (see page 14-4).

1. Warm up the engine to normal operating temperature (the radiator fan comes on).

2. Make sure that the transmission is filled to the proper level, and check for fluid leaks.

3. Drain the ATF (see step 3 on page 14-239) through a strainer. Inspect the strainer for metal debris or excessive clutch material.

   Does the strainer have metal debris or excessive clutch material?

   YES—Replace the transmission, then go to step 9.

   NO—Replace the ATF (see step 5 on page 14-239), then go to step 4.

4. Measure the line pressure (see page 14-214).

   Is the line pressure within the service limits?

   YES—Go to step 5.

   NO—Repair the ATF pump and the regulator valve, or replace the transmission, then go to step 9.

5. Measure the 3rd clutch pressure (see page 14-214).

   Is the 3rd clutch pressure within the service limits?

   YES—Go to step 6.

   NO—Shift valves A, B, and C are stuck. Repair these valves and the hydraulic circuit, or replace the transmission, then go to step 9.

6. Clear the DTC with the HDS.

7. Test-drive the vehicle for several minutes under the same conditions as those indicated by the freeze data, or run the vehicle in 3rd gear in the D position D3 driving mode at speeds over 10 mph (16 km/h) for 20 seconds. Slow down and stop the wheels.

8. Monitor the OBD STATUS for P0733 in the DTCs/ Freeze Data in A/T Mode Menu for a pass/fail.

   Does the HDS indicate FAILED?

   YES—Repair the 3rd clutch, or replace the transmission, then go to step 9.

   NO—Intermittent failure, the system is OK at this time. If the HDS indicates NOT COMPLETED, return to step 7 and recheck.

9. Clear the DTC with the HDS.

10. Test-drive the vehicle for several minutes under the same conditions as those indicated by the freeze data, or run the vehicle in 3rd gear in the D position D3 driving mode at speeds over 10 mph (16 km/h) for 20 seconds. Slow down and stop the wheels.

11. Monitor the OBD STATUS for P0733 in the DTCs/ Freeze Data in A/T Mode Menu for a pass/fail.

    Does the HDS indicate PASSED?

    YES—Troubleshooting is complete. ■

    NO—If the HDS indicates FAILED, return to step 1 and recheck. If the HDS indicates NOT COMPLETED, return to step 10 and recheck.

DTC Troubleshooting (cont'd)

DTC P0734: Problem in 4th Clutch and 4th Clutch Hydraulic Circuit

NOTE: Before you troubleshoot, record all freeze data and any on-board snapshot, and review General Troubleshooting Information (see page 14-4).

1. Warm up the engine to normal operating temperature (the radiator fan comes on).
2. Make sure that the transmission is filled to the proper level, and check for fluid leaks.
3. Drain the ATF (see step 3 on page 14-239) through a strainer. Inspect the strainer for metal debris or excessive clutch material.

   Does the strainer have metal debris or excessive clutch material?

   YES—Replace the transmission, then go to step 9.

   NO—Replace the ATF (see step 5 on page 14-239), then go to step 4.
4. Measure the line pressure (see page 14-214).

   Is the line pressure within the service limits?

   YES—Go to step 5.

   NO—Repair the ATF pump and the regulator valve, or replace the transmission, then go to step 9.
5. Measure the 4th clutch pressure (see page 14-214).

   Is the 4th clutch pressure within the service limits?

   YES—Go to step 6.

   NO—Shift valves B, shift valve C, servo control valve, and servo valve are stuck. Repair these valves and the hydraulic circuit, or replace the transmission, then go to step 9.
6. Clear the DTC with the HDS.
7. Test-drive the vehicle for several minutes under the same conditions as those indicated by the freeze data, or run the vehicle in 4th gear in the D position at speeds over 10 mph (16 km/h) for 20 seconds. Slow down and stop the wheels.
8. Monitor the OBD STATUS for P0734 in the DTCs/ Freeze Data in A/T Mode Menu for a pass/fail.

   Does the HDS indicate FAILED?

   YES—Repair the 4th clutch, or replace the transmission, then go to step 9.

   NO—Intermittent failure, the system is OK at this time. If the HDS indicates NOT COMPLETED, return to step 7 and recheck.
9. Clear the DTC with the HDS.
10. Test-drive the vehicle for several minutes under the same conditions as those indicated by the freeze data, or run the vehicle in 4th gear in the D position at speeds over 10 mph (16 km/h) for 20 seconds. Slow down and stop the wheels.
11. Monitor the OBD STATUS for P0734 in the DTCs/ Freeze Data in A/T Mode Menu for a pass/fail.

    Does the HDS indicate PASSED?

    YES—Troubleshooting is complete.■

    NO—If the HDS indicates FAILED, return to step 1 and recheck. If the HDS indicates NOT COMPLETED, return to step 10 and recheck.

DTC P0735: Problem in 5th Clutch and 5th Clutch Hydraulic Circuit

NOTE: Before you troubleshoot, record all freeze data and any on-board snapshot, and review General Troubleshooting Information (see page 14-4).

1. Warm up the engine to normal operating temperature (the radiator fan comes on).
2. Make sure that the transmission is filled to the proper level, and check for fluid leaks.
3. Drain the ATF (see step 3 on page 14-239) through a strainer. Inspect the strainer for metal debris or excessive clutch material.

   Does the strainer have metal debris or excessive clutch material?

   YES—Replace the transmission, then go to step 9.

   NO—Replace the ATF (see step 5 on page 14-239), then go to step 4.
4. Measure the line pressure (see page 14-214).

   Is the line pressure within the service limits?

   YES—Go to step 5.

   NO—Repair the ATF pump and the regulator valve, or replace the transmission, then go to step 9.
5. Measure the 5th clutch pressure (see page 14-214).

   Is the 5th clutch pressure within the service limits?

   YES—Go to step 6.

   NO—Shift valves A, B, and/or D are stuck. Repair these valves and the hydraulic circuit or replace the transmission, then go to step 9.
6. Clear the DTC with the HDS.
7. Test-drive the vehicle for several minutes under the same conditions as those indicated by the freeze data, or run the vehicle in 5th gear in the D position at speeds over 10 mph (16 km/h) for 20 seconds. Slow down and stop the wheels.
8. Monitor the OBD STATUS for P0735 in the DTCs/ Freeze Data in A/T Mode Menu for a pass/fail.

   Does the HDS indicate FAILED?

   YES—Repair the 5th clutch, or replace the transmission, then go to step 9.

   NO—Intermittent failure, the system is OK at this time. If the HDS indicates NOT COMPLETED, return to step 7 and recheck.
9. Clear the DTC with the HDS.
10. Test-drive the vehicle for several minutes under the same conditions as those indicated by the freeze data, or run the vehicle in 5th gear in the D position at speeds over 10 mph (16 km/h) for 20 seconds. Slow down and stop the wheels.
11. Monitor the OBD STATUS for P0735 in the DTCs/ Freeze Data in A/T Mode Menu for a pass/fail.

    Does the HDS indicate PASSED?

    YES—Troubleshooting is complete. ■

    NO—If the HDS indicates FAILED, return to step 1 and recheck. If the HDS indicates NOT COMPLETED, return to step 10 and recheck.

DTC Troubleshooting (cont'd)

DTC P0741: Torque Converter Clutch Hydraulic Circuit Stuck OFF

NOTE: Before you troubleshoot, record all freeze data and any on-board snapshot, and review General Troubleshooting Information (see page 14-4).

1. Warm up the engine to normal operating temperature (the radiator fan comes on).
2. Make sure that the transmission is filled to the proper level, and check for fluid leaks.
3. Drain the ATF (see step 3 on page 14-239) through a strainer. Inspect the strainer for metal debris or excessive clutch material.

   Does the strainer have metal debris or excessive clutch material?

   YES—Replace the transmission, then go to step 11.

   NO—Replace the ATF (see step 5 on page 14-239), then go to step 4.
4. Clear the DTC with the HDS.
5. Choose Shift Solenoid E in the Miscellaneous Test Menu, and make sure the shift solenoid valve E operates with the HDS.

   Is a clicking sound heard?

   YES—Go to step 6.

   NO—Replace shift solenoid valve E (see page 14-222), then go to step 11.
6. Run the engine until the engine coolant temperature reaches 176 °F (80 °C).
7. Choose Clutch Pressure Control (Linear) Solenoid A in the Miscellaneous Test Menu, and test A/T clutch pressure control solenoid valve A with the HDS.

   Does the HDS indicate NORMAL?

   YES—Go to step 8.

   NO—Follow the instructions indicated on the HDS for the test result, but if the HDS has not determined the cause of the failure, go to step 10. If any part is replaced, go to step 11.
8. Test-drive the vehicle on a level road with a steady throttle at 55 mph (88 km/h) for 2 minutes.
9. Monitor the OBD STATUS for P0741 in the DTCs/ Freeze Data in A/T Mode Menu for a pass/fail.

   Does the HDS indicate FAILED?

   YES—Repair the faulty torque converter clutch mechanism, torque converter clutch hydraulic circuit, lock-up shift valve, or lock-up control valve, or replace the transmission, then go to step 11.

   NO—Intermittent failure, the system is OK at this time. If the HDS indicates NOT COMPLETED, return to step 8 and recheck.
10. Inspect A/T clutch pressure control solenoid valve A (see page 14-225).

    Does A/T clutch pressure control solenoid valve A work properly?

    YES—Repair the hydraulic system related to the lock-up shift valve, lock-up control valve, and lock-up timing valve, or replace the transmission, then go to step 11.

    NO—Replace A/T clutch pressure control solenoid valve A (see page 14-227), then go to step 11.
11. Clear the DTC with the HDS.
12. Test-drive the vehicle for several minutes under the same conditions as those indicated by the freeze data.
13. Monitor the OBD STATUS for P0741 in the DTCs/ Freeze Data in A/T Mode Menu for a pass/fail.

    Does the HDS indicate PASSED?

    YES—Troubleshooting is complete. ■

    NO—If the HDS indicates FAILED, return to step 1 and recheck. If the HDS indicates NOT COMPLETED, return to step 12 and recheck.

DTC P0747: A/T Clutch Pressure Control Solenoid Valve A Stuck ON

NOTE: Before you troubleshoot, record all freeze data and any on-board snapshot, and review General Troubleshooting Information (see page 14-4).

1. Warm up the engine to normal operating temperature (the radiator fan comes on).

2. Make sure that the transmission is filled to the proper level, and check for fluid leaks.

3. Drain the ATF (see step 3 on page 14-239) through a strainer. Inspect the strainer for metal debris or excessive clutch material.

   Does the strainer have metal debris or excessive clutch material?

   YES—Replace the transmission, then go to step 11.

   NO—Replace the ATF (see step 5 on page 14-239), then go to step 4.

4. Clear the DTC with the HDS.

5. Test-drive the vehicle in the D position through all five gears at speeds over 12 mph (20 km/h) for more than 20 seconds, then slow down to a stop.

6. Test-drive the vehicle again in the D position through all five gears at speeds over 12 mph (20 km/h) for more than 20 seconds, then slow down to a stop.

7. Monitor the OBD STATUS for P0747 in the DTCs/ Freeze Data in A/T Mode Menu for a pass/fail.

   Does the HDS indicate FAILED?

   YES—Go to step 8.

   NO—Intermittent failure, the system is OK at this time. If the HDS indicates NOT COMPLETED, return to step 5 and recheck.

8. Clear the DTC with the HDS.

9. Choose Clutch Pressure Control (Linear) Solenoid A in the Miscellaneous Test Menu, and test A/T clutch pressure control solenoid valve A with the HDS.

   Does the HDS indicate NORMAL?

   YES—Intermittent failure, the system is OK at this time. ■

   NO—Follow the instructions indicated on the HDS by the test result, but if the HDS has not determined the cause of the failure, go to step 10. If any part is replaced, go to step 11.

10. Inspect A/T clutch pressure control solenoid valve A (see page 14-225).

    Does A/T clutch pressure control solenoid valve A work properly?

    YES—Repair the hydraulic system related with shift valve A, or replace the transmission, then go to step 11.

    NO—Replace A/T clutch pressure control solenoid valve A (see page 14-227), then go to step 11.

11. Clear the DTC with the HDS.

12. Test-drive the vehicle in the D position through all five gears at speeds over 12 mph (20 km/h) for more than 20 seconds, then slow down to a stop.

13. Test-drive the vehicle again in the D position through all five gears at speeds over 12 mph (20 km/h) for more than 20 seconds, then slow down to a stop.

14. Monitor the OBD STATUS for P0747 in the DTCs/ Freeze Data in A/T Mode Menu for a pass/fail.

    Does the HDS indicate PASSED?

    YES—Troubleshooting is complete. ■

    NO—If the HDS indicates FAILED, return to step 1 and recheck. If the HDS indicates NOT COMPLETED, return to step 12 and recheck.

DTC Troubleshooting (cont'd)

DTC P0752: Shift Solenoid Valve A Stuck ON

NOTE: Before you troubleshoot, record all freeze data and any on-board snapshot, and review General Troubleshooting Information (see page 14-4).

1. Warm up the engine to normal operating temperature (the radiator fan comes on).
2. Make sure that the transmission is filled to the proper level, and check for fluid leaks.
3. Drain the ATF (see step 3 on page 14-239) through a strainer. Inspect the strainer for metal debris or excessive clutch material.

   Does the strainer have metal debris or excessive clutch material?

   YES—Replace the transmission, then go to step 13.

   NO—Replace the ATF (see step 5 on page 14-239), then go to step 4.
4. Clear the DTC with the HDS.
5. Test-drive the vehicle in the D position through all five gears at speeds over 12 mph (20 km/h) for more than 20 seconds, then slow down to a stop.
6. Test-drive the vehicle again in the D position through all five gears at speeds over 12 mph (20 km/h) for more than 20 seconds, then slow down to a stop.
7. Monitor the OBD STATUS for P0752 in the DTCs/ Freeze Data in A/T Mode Menu for a pass/fail.

   Does the HDS indicate FAILED?

   YES—Go to step 8.

   NO—Intermittent failure, the system is OK at this time. If the HDS indicates NOT COMPLETED, return to step 5 and recheck.
8. Clear the DTC with the HDS.
9. Choose Shift Solenoid A in the Miscellaneous Test Menu, and make sure the shift solenoid valve A operates with the HDS.

   Is a clicking sound heard?

   YES—Go to step 10.

   NO—Replace shift solenoid valve A (see page 14-222), then go to step 13.
10. Test-drive the vehicle in the D position through all five gears at speeds over 12 mph (20 km/h) for more than 20 seconds, then slow down to a stop.
11. Test-drive the vehicle again in the D position through all five gears at speeds over 12 mph (20 km/h) for more than 20 seconds, then slow down to a stop.
12. Monitor the OBD STATUS for P0752 in the DTCs/ Freeze Data in A/T Mode Menu for a pass/fail.

    Does the HDS indicate FAILED?

    YES—Repair shift valve A, or replace the transmission, then go to step 13.

    NO—Intermittent failure, the system is OK at this time. If the HDS indicates NOT COMPLETED, return to step 10 and recheck.
13. Clear the DTC with the HDS.
14. Test-drive the vehicle in the D position through all five gears at speeds over 12 mph (20 km/h) for more than 20 seconds, then slow down to a stop.
15. Test-drive the vehicle again in the D position through all five gears at speeds over 12 mph (20 km/h) for more than 20 seconds, then slow down to a stop.
16. Monitor the OBD STATUS for P0752 in the DTCs/ Freeze Data in A/T Mode Menu for a pass/fail.

    Does the HDS indicate PASSED?

    YES—Troubleshooting is complete. ■

    NO—If the HDS indicates FAILED, return to step 1 and recheck. If the HDS indicates NOT COMPLETED, return to step 14 and recheck.

DTC P0756: Shift Solenoid Valve B Stuck OFF

NOTE: Before you troubleshoot, record all freeze data and any on-board snapshot, and review General Troubleshooting Information (see page 14-4).

1. Warm up the engine to normal operating temperature (the radiator fan comes on).
2. Make sure that the transmission is filled to the proper level, and check for fluid leaks.
3. Drain the ATF (see step 3 on page 14-239) through a strainer. Inspect the strainer for metal debris or excessive clutch material.

   Does the strainer have metal debris or excessive clutch material?

   YES—Replace the transmission, then go to step 13.

   NO—Replace the ATF (see step 5 on page 14-239), then go to step 4.
4. Clear the DTC with the HDS.
5. Test-drive the vehicle in the D position through all five gears at speeds over 12 mph (20 km/h) for more than 20 seconds, then slow down to a stop.
6. Test-drive the vehicle again in the D position through all five gears at speeds over 12 mph (20 km/h) for more than 20 seconds, then slow down to a stop.
7. Monitor the OBD STATUS for P0756 in the DTCs/ Freeze Data in A/T Mode Menu for a pass/fail.

   Does the HDS indicate FAILED?

   YES—Go to step 8.

   NO—Intermittent failure, the system is OK at this time. If the HDS indicates NOT COMPLETED, return to step 5 and recheck.
8. Clear the DTC with the HDS.
9. Choose Shift Solenoid B in the Miscellaneous Test Menu, and make sure the shift solenoid valve B operates with the HDS.

   Is a clicking sound heard?

   YES—Go to step 10.

   NO—Replace shift solenoid valve B (see page 14-222), then go to step 13.
10. Test-drive the vehicle in the D position through all five gears at speeds over 12 mph (20 km/h) for more than 20 seconds, then slow down to a stop.
11. Test-drive the vehicle again in the D position through all five gears at speeds over 12 mph (20 km/h) for more than 20 seconds, then slow down to a stop.
12. Monitor the OBD STATUS for P0756 in the DTCs/ Freeze Data in A/T Mode Menu for a pass/fail.

    Does the HDS indicate FAILED?

    YES—Repair shift valve B, or replace the transmission, then go to step 13.

    NO—Intermittent failure, the system is OK at this time. If the HDS indicates NOT COMPLETED, return to step 10 and recheck.
13. Clear the DTC with the HDS.
14. Test-drive the vehicle in the D position through all five gears at speeds over 12 mph (20 km/h) for more than 20 seconds, then slow down to a stop.
15. Test-drive the vehicle again in the D position through all five gears at speeds over 12 mph (20 km/h) for more than 20 seconds, then slow down to a stop.
16. Monitor the OBD STATUS for P0756 in the DTCs/ Freeze Data in A/T Mode Menu for a pass/fail.

    Does the HDS indicate PASSED?

    YES—Troubleshooting is complete.■

    NO—If the HDS indicates FAILED, return to step 1 and recheck. If the HDS indicates NOT COMPLETED, return to step 14 and recheck.

DTC Troubleshooting (cont'd)

DTC P0757: Shift Solenoid Valve B Stuck ON

NOTE: Before you troubleshoot, record all freeze data and any on-board snapshot, and review General Troubleshooting Information (see page 14-4).

1. Warm up the engine to normal operating temperature (the radiator fan comes on).
2. Make sure that the transmission is filled to the proper level, and check for fluid leaks.
3. Drain the ATF (see step 3 on page 14-239) through a strainer. Inspect the strainer for metal debris or excessive clutch material.

   Does the strainer have metal debris or excessive clutch material?

   YES—Replace the transmission, then go to step 13.

   NO—Replace the ATF (see step 5 on page 14-239), then go to step 4.
4. Clear the DTC with the HDS.
5. Test-drive the vehicle in the D position through all five gears at speeds over 12 mph (20 km/h) for more than 20 seconds, then slow down to a stop.
6. Test-drive the vehicle again in the D position through all five gears at speeds over 12 mph (20 km/h) for more than 20 seconds, then slow down to a stop.
7. Monitor the OBD STATUS for P0757 in the DTCs/ Freeze Data in A/T Mode Menu for a pass/fail.

   Does the HDS indicate FAILED?

   YES—Go to step 8.

   NO—Intermittent failure, the system is OK at this time. If the HDS indicates NOT COMPLETED, return to step 5 and recheck.
8. Clear the DTC with the HDS.
9. Choose Shift Solenoid B in the Miscellaneous Test Menu, and make sure the shift solenoid valve B operates with the HDS.

   Is a clicking sound heard?

   YES—Go to step 10.

   NO—Replace shift solenoid valve B (see page 14-222), then go to step 13.
10. Test-drive the vehicle in the D position through all five gears at speeds over 12 mph (20 km/h) for more than 20 seconds, then slow down to a stop.
11. Test-drive the vehicle again in the D position through all five gears at speeds over 12 mph (20 km/h) for more than 20 seconds, then slow down to a stop.
12. Monitor the OBD STATUS for P0757 in the DTCs/ Freeze Data in A/T Mode Menu for a pass/fail.

    Does the HDS indicate FAILED?

    YES—Repair shift valve B, or replace the transmission, then go to step 13.

    NO—Intermittent failure, the system is OK at this time. If the HDS indicates NOT COMPLETED, return to step 10 and recheck.
13. Clear the DTC with the HDS.
14. Test-drive the vehicle in the D position through all five gears at speeds over 12 mph (20 km/h) for more than 20 seconds, then slow down to a stop.
15. Test-drive the vehicle again in the D position through all five gears at speeds over 12 mph (20 km/h) for more than 20 seconds, then slow down to a stop.
16. Monitor the OBD STATUS for P0757 in the DTCs/ Freeze Data in A/T Mode Menu for a pass/fail.

    Does the HDS indicate PASSED?

    YES—Troubleshooting is complete.■

    NO—If the HDS indicates FAILED, return to step 1 and recheck. If the HDS indicates NOT COMPLETED, return to step 14 and recheck.

DTC P0761: Shift Solenoid Valve C Stuck OFF

NOTE: Before you troubleshoot, record all freeze data and any on-board snapshot, and review General Troubleshooting Information (see page 14-4).

1. Warm up the engine to normal operating temperature (the radiator fan comes on).
2. Make sure that the transmission is filled to the proper level, and check for fluid leaks.
3. Drain the ATF (see step 3 on page 14-239) through a strainer. Inspect the strainer for metal debris or excessive clutch material.

   Does the strainer have metal debris or excessive clutch material?

   YES—Replace the transmission, then go to step 13.

   NO—Replace the ATF (see step 5 on page 14-239), then go to step 4.
4. Clear the DTC with the HDS.
5. Test-drive the vehicle in the D position through all five gears at speeds over 12 mph (20 km/h) for more than 20 seconds, then slow down to a stop.
6. Test-drive the vehicle again in the D position through all five gears at speeds over 12 mph (20 km/h) for more than 20 seconds, then slow down to a stop.
7. Monitor the OBD STATUS for P0761 in the DTCs/ Freeze Data in A/T Mode Menu for a pass/fail.

   Does the HDS indicate FAILED?

   YES—Go to step 8.

   NO—Intermittent failure, the system is OK at this time. If the HDS indicates NOT COMPLETED, return to step 5 and recheck.
8. Clear the DTC with the HDS.
9. Choose Shift Solenoid C in the Miscellaneous Test Menu, and make sure the shift solenoid valve C operates with the HDS.

   Is a clicking sound heard?

   YES—Go to step 10.

   NO—Replace shift solenoid valve C (see page 14-222), then go to step 13.
10. Test-drive the vehicle in the D position through all five gears at speeds over 12 mph (20 km/h) for more than 20 seconds, then slow down to a stop.
11. Test-drive the vehicle again in the D position through all five gears at speeds over 12 mph (20 km/h) for more than 20 seconds, then slow down to a stop.
12. Monitor the OBD STATUS for P0761 in the DTCs/ Freeze Data in A/T Mode Menu for a pass/fail.

    Does the HDS indicate FAILED?

    YES—Repair shift valve C, or replace the transmission, then go to step 13.

    NO—Intermittent failure, the system is OK at this time. If the HDS indicates NOT COMPLETED, return to step 10 and recheck.
13. Clear the DTC with the HDS.
14. Test-drive the vehicle in the D position through all five gears at speeds over 12 mph (20 km/h) for more than 20 seconds, then slow down to a stop.
15. Test-drive the vehicle again in the D position through all five gears at speeds over 12 mph (20 km/h) for more than 20 seconds, then slow down to a stop.
16. Monitor the OBD STATUS for P0761 in the DTCs/ Freeze Data in A/T Mode Menu for a pass/fail.

    Does the HDS indicate PASSED?

    YES—Troubleshooting is complete. ■

    NO—If the HDS indicates FAILED, return to step 1 and recheck. If the HDS indicates NOT COMPLETED, return to step 14 and recheck.

DTC Troubleshooting (cont'd)

DTC P0771: Shift Solenoid Valve E Stuck OFF

NOTE: Before you troubleshoot, record all freeze data and any on-board snapshot, and review General Troubleshooting Information (see page 14-4).

1. Warm up the engine to normal operating temperature (the radiator fan comes on).
2. Make sure that the transmission is filled to the proper level, and check for fluid leaks.
3. Drain the ATF (see step 3 on page 14-239) through a strainer. Inspect the strainer for metal debris or excessive clutch material.

   Does the strainer have metal debris or excessive clutch material?

   YES—Replace the transmission, then go to step 13.

   NO—Replace the ATF (see step 5 on page 14-239), then go to step 4.
4. Clear the DTC with the HDS.
5. Test-drive the vehicle in the D position through all five gears at speeds over 12 mph (20 km/h) for more than 20 seconds, then slow down to a stop.
6. Test-drive the vehicle again in the D position through all five gears at speeds over 12 mph (20 km/h) for more than 20 seconds, then slow down to a stop.
7. Monitor the OBD STATUS for P0771 in the DTCs/ Freeze Data in A/T Mode Menu for a pass/fail.

   Does the HDS indicate FAILED?

   YES—Go to step 8.

   NO—Intermittent failure, the system is OK at this time. If the HDS indicates NOT COMPLETED, return to step 5 and recheck.
8. Clear the DTC with the HDS.
9. Choose Shift Solenoid E in the Miscellaneous Test Menu, and make sure the shift solenoid valve E operates with the HDS.

   Is a clicking sound heard?

   YES—Go to step 10.

   NO—Replace shift solenoid valve E (see page 14-222), then go to step 13.
10. Test-drive the vehicle in the D position through all five gears at speeds over 12 mph (20 km/h) for more than 20 seconds, then slow down to a stop.
11. Test-drive the vehicle again in the D position through all five gears at speeds over 12 mph (20 km/h) for more than 20 seconds, then slow down to a stop.
12. Monitor the OBD STATUS for P0771 in the DTCs/ Freeze Data in A/T Mode Menu for a pass/fail.

    Does the HDS indicate FAILED?

    YES—Repair shift valve E, or replace the transmission, then go to step 13.

    NO—Intermittent failure, the system is OK at this time. If the HDS indicates NOT COMPLETED, return to step 10 and recheck.
13. Clear the DTC with the HDS.
14. Test-drive the vehicle in the D position through all five gears at speeds over 12 mph (20 km/h) for more than 20 seconds, then slow down to a stop.
15. Test-drive the vehicle again in the D position through all five gears at speeds over 12 mph (20 km/h) for more than 20 seconds, then slow down to a stop.
16. Monitor the OBD STATUS for P0771 in the DTCs/ Freeze Data in A/T Mode Menu for a pass/fail.

    Does the HDS indicate PASSED?

    YES—Troubleshooting is complete. ■

    NO—If the HDS indicates FAILED, return to step 1 and recheck. If the HDS indicates NOT COMPLETED, return to step 14 and recheck.

DTC P0776: A/T Clutch Pressure Control Solenoid Valve B Stuck OFF

NOTE: Before you troubleshoot, record all freeze data and any on-board snapshot, and review General Troubleshooting Information (see page 14-4).

1. Warm up the engine to normal operating temperature (the radiator fan comes on).

2. Make sure that the transmission is filled to the proper level, and check for fluid leaks.

3. Drain the ATF (see step 3 on page 14-239) through a strainer. Inspect the strainer for metal debris or excessive clutch material.

   Does the strainer have metal debris or excessive clutch material?

   YES—Replace the transmission, then go to step 11.

   NO—Replace the ATF (see step 5 on page 14-239), then go to step 4.

4. Clear the DTC with the HDS.

5. Test-drive the vehicle in the D position through all five gears at speeds over 12 mph (20 km/h) for more than 20 seconds, then slow down to a stop.

6. Test-drive the vehicle again in the D position through all five gears at speeds over 12 mph (20 km/h) for more than 20 seconds, then slow down to a stop.

7. Monitor the OBD STATUS for P0776 in the DTCs/ Freeze Data in A/T Mode Menu for a pass/fail.

   Does the HDS indicate FAILED?

   YES—Go to step 8.

   NO—Intermittent failure, the system is OK at this time. If the HDS indicates NOT COMPLETED, return to step 5 and recheck.

8. Clear the DTC with the HDS.

9. Choose Clutch Pressure Control (Linear) Solenoid B in the Miscellaneous Test Menu, and test A/T clutch pressure control solenoid valve B with the HDS.

   Does the HDS indicate NORMAL?

   YES—Intermittent failure, the system is OK at this time. ■

   NO—Follow the instructions indicated on the HDS by the test result, but if the HDS has not determined the cause of the failure, go to step 10. If any part is replaced, go to step 11.

10. Inspect A/T clutch pressure control solenoid valve B (see page 14-228).

    Does A/T clutch pressure control solenoid valve B work properly?

    YES—Repair the hydraulic system related with shift valve B, or replace the transmission, then go to step 11.

    NO—Replace A/T clutch pressure control solenoid valve B (see page 14-232), then go to step 11.

11. Clear the DTC with the HDS.

12. Test-drive the vehicle in the D position through all five gears at speeds over 12 mph (20 km/h) for more than 20 seconds, then slow down to a stop.

13. Test-drive the vehicle again in the D position through all five gears at speeds over 12 mph (20 km/h) for more than 20 seconds, then slow down to a stop.

14. Monitor the OBD STATUS for P0776 in the DTCs/ Freeze Data in A/T Mode Menu for a pass/fail.

    Does the HDS indicate PASSED?

    YES—Troubleshooting is complete. ■

    NO—If the HDS indicates FAILED, return to step 1 and recheck. If the HDS indicates NOT COMPLETED, return to step 12 and recheck.

DTC Troubleshooting (cont'd)

DTC P0777: A/T Clutch Pressure Control Solenoid Valve B Stuck ON

NOTE: Before you troubleshoot, record all freeze data and any on-board snapshot, and review General Troubleshooting Information (see page 14-4).

1. Warm up the engine to normal operating temperature (the radiator fan comes on).
2. Make sure that the transmission is filled to the proper level, and check for fluid leaks.
3. Drain the ATF (see step 3 on page 14-239) through a strainer. Inspect the strainer for metal debris or excessive clutch material.

   Does the strainer have metal debris or excessive clutch material?

   YES—Replace the transmission, then go to step 11.

   NO—Replace the ATF (see step 5 on page 14-239), then go to step 4.
4. Clear the DTC with the HDS.
5. Test-drive the vehicle in the D position through all five gears at speeds over 12 mph (20 km/h) for more than 20 seconds, then slow down to a stop.
6. Test-drive the vehicle again in the D position through all five gears at speeds over 12 mph (20 km/h) for more than 20 seconds, then slow down to a stop.
7. Monitor the OBD STATUS for P0777 in the DTCs/ Freeze Data in A/T Mode Menu for a pass/fail.

   Does the HDS indicate FAILED?

   YES—Go to step 8.

   NO—Intermittent failure, the system is OK at this time. If the HDS indicates NOT COMPLETED, return to step 5 and recheck.
8. Clear the DTC with the HDS.
9. Choose Clutch Pressure Control (Linear) Solenoid B in the Miscellaneous Test Menu, and test A/T clutch pressure control solenoid valve B with the HDS.

   Does the HDS indicate NORMAL?

   YES—Intermittent failure, the system is OK at this time.■

   NO—Follow the instructions indicated on the HDS by the test result, but if the HDS has not determined the cause of the failure, go to step 10. If any part is replaced, go to step 11.
10. Inspect A/T clutch pressure control solenoid valve B (see page 14-228).

    Does A/T clutch pressure control solenoid valve B work properly?

    YES—Repair the hydraulic system related with shift valve B, or replace the transmission, then go to step 11.

    NO—Replace A/T clutch pressure control solenoid valve B (see page 14-232), then go to step 11.
11. Clear the DTC with the HDS.
12. Test-drive the vehicle in the D position through all five gears at speeds over 12 mph (20 km/h) for more than 20 seconds, then slow down to a stop.
13. Test-drive the vehicle again in the D position through all five gears at speeds over 12 mph (20 km/h) for more than 20 seconds, then slow down to a stop.
14. Monitor the OBD STATUS for P0777 in the DTCs/ Freeze Data in A/T Mode Menu for a pass/fail.

    Does the HDS indicate PASSED?

    YES—Troubleshooting is complete.■

    NO—If the HDS indicates FAILED, return to step 1 and recheck. If the HDS indicates NOT COMPLETED, return to step 12 and recheck.

DTC P0780: Shift Control System

NOTE: Before you troubleshoot, record all freeze data and any on-board snapshot, and review General Troubleshooting Information (see page 14-4).

1. Check for other DTCs indicated simultaneous with DTC P0780.

   NOTE: DTC P0780 means there is one or more A/T DTCs about the shift control system.

   Are there other DTCs?

   YES—Troubleshoot indicated DTC(s):

   - P1730 (see page 14-195)
   - P1731 (see page 14-197)
   - P1732 (see page 14-199)
   - P1733 (see page 14-201)
   - P1734 (see page 14-203)

   NO—Go to step 2.

2. Update the A/T software in the PCM if it does not have latest software (see page 14-9), or substitute a known-good PCM (see page 14-10).

3. Check for DTC(s) in the DTCs/Freeze Data in A/T Mode Menu with the HDS.

   Is DTC P0780 indicated?

   YES—If the PCM was updated, substitute a known-good PCM (see page 14-10), then recheck. If the PCM was substituted, go to step 1.

   NO—Go to step 4.

4. Monitor the OBD STATUS for P0780 in the DTCs/Freeze Data in A/T Mode Menu for a pass/fail.

   Does the HDS indicate PASSED?

   YES—If the PCM was updated, troubleshooting is complete. If the PCM was substituted, replace the original PCM (see page 11-219). If any other DTCs were indicated on step 3, go to the indicated DTC's troubleshooting. ■

   NO—If the HDS indicates FAILED, check for poor connections and loose terminals at shift solenoid valves, A/T clutch pressure control solenoid valves, and the PCM. If the PCM was updated, substitute a known-good PCM (see page 14-10), then recheck. If the PCM was substituted, go to step 1. If the HDS indicates NOT COMPLETED, keep idling until a result comes on.

DTC Troubleshooting (cont'd)

DTC P0796: A/T Clutch Pressure Control Solenoid Valve C Stuck OFF

NOTE: Before you troubleshoot, record all freeze data and any on-board snapshot, and review General Troubleshooting Information (see page 14-4).

1. Warm up the engine to normal operating temperature (the radiator fan comes on).
2. Make sure that the transmission is filled to the proper level, and check for fluid leaks.
3. Drain the ATF (see step 3 on page 14-239) through a strainer. Inspect the strainer for metal debris or excessive clutch material.

   Does the strainer have metal debris or excessive clutch material?

   YES—Replace the transmission, then go to step 11.

   NO—Replace the ATF (see step 5 on page 14-239), then go to step 4.
4. Clear the DTC with the HDS.
5. Test-drive the vehicle in the D position through all five gears at speeds over 12 mph (20 km/h) for more than 20 seconds, then slow down to a stop.
6. Test-drive the vehicle again in the D position through all five gears at speeds over 12 mph (20 km/h) for more than 20 seconds, then slow down to a stop.
7. Monitor the OBD STATUS for P0796 in the DTCs/ Freeze Data in A/T Mode Menu for a pass/fail.

   Does the HDS indicate FAILED?

   YES—Go to step 8.

   NO—Intermittent failure, the system is OK at this time. If the HDS indicates NOT COMPLETED, return to step 5 and recheck.
8. Clear the DTC with the HDS.
9. Choose Clutch Pressure Control (Linear) Solenoid C in the Miscellaneous Test Menu, and test A/T clutch pressure control solenoid valve C with the HDS.

   Does the HDS indicate NORMAL?

   YES—Intermittent failure, the system is OK at this time.■

   NO—Follow the instructions indicated on the HDS by the test result, but if the HDS has not determined the cause of the failure, go to step 10. If any part is replaced, go to step 11.
10. Inspect A/T clutch pressure control solenoid valve C (see page 14-230).

    Does A/T clutch pressure control solenoid valve C work properly?

    YES—Repair the hydraulic system related with shift valve C, or replace the transmission, then go to step 11.

    NO—Replace A/T clutch pressure control solenoid valve C (see page 14-232), then go to step 11.
11. Clear the DTC with the HDS.
12. Test-drive the vehicle in the D position through all five gears at speeds over 12 mph (20 km/h) for more than 20 seconds, then slow down to a stop.
13. Test-drive the vehicle again in the D position through all five gears at speeds over 12 mph (20 km/h) for more than 20 seconds, then slow down to a stop.
14. Monitor the OBD STATUS for P0796 in the DTCs/ Freeze Data in A/T Mode Menu for a pass/fail.

    Does the HDS indicate PASSED?

    YES—Troubleshooting is complete.■

    NO—If the HDS indicates FAILED, return to step 1 and recheck. If the HDS indicates NOT COMPLETED, return to step 12 and recheck.

DTC P0797: A/T Clutch Pressure Control Solenoid Valve C Stuck ON

NOTE: Before you troubleshoot, record all freeze data and any on-board snapshot, and review General Troubleshooting Information (see page 14-4).

1. Warm up the engine to normal operating temperature (the radiator fan comes on).

2. Make sure that the transmission is filled to the proper level, and check for fluid leaks.

3. Drain the ATF (see step 3 on page 14-239) through a strainer. Inspect the strainer for metal debris or excessive clutch material.

   Does the strainer have metal debris or excessive clutch material?

   YES—Replace the transmission, then go to step 11.

   NO—Replace the ATF (see step 5 on page 14-239), then go to step 4.

4. Clear the DTC with the HDS.

5. Test-drive the vehicle in the D position through all five gears at speeds over 12 mph (20 km/h) for more than 20 seconds, then slow down to a stop.

6. Test-drive the vehicle again in the D position through all five gears at speeds over 12 mph (20 km/h) for more than 20 seconds, then slow down to a stop.

7. Monitor the OBD STATUS for P0797 in the DTCs/ Freeze Data in A/T Mode Menu for a pass/fail.

   Does the HDS indicate FAILED?

   YES—Go to step 8.

   NO—Intermittent failure, the system is OK at this time. If the HDS indicates NOT COMPLETED, return to step 5 and recheck.

8. Clear the DTC with the HDS.

9. Choose Clutch Pressure Control (Linear) Solenoid C in the Miscellaneous Test Menu, and test A/T clutch pressure control solenoid valve C with the HDS.

   Does the HDS indicate NORMAL?

   YES—Intermittent failure, the system is OK at this time. ■

   NO—Follow the instructions indicated on the HDS by the test result, but if the HDS has not determined the cause of the failure, go to step 10. If any part is replaced, go to step 11.

10. Inspect A/T clutch pressure control solenoid valve C (see page 14-230).

    Does A/T clutch pressure control solenoid valve C work properly?

    YES—Repair the hydraulic system related with shift valve C, or replace the transmission, then go to step 11.

    NO—Replace A/T clutch pressure control solenoid valve C (see page 14-232), then go to step 11.

11. Clear the DTC with the HDS.

12. Test-drive the vehicle in the D position through all five gears at speeds over 12 mph (20 km/h) for more than 20 seconds, then slow down to a stop.

13. Test-drive the vehicle again in the D position through all five gears at speeds over 12 mph (20 km/h) for more than 20 seconds, then slow down to a stop.

14. Monitor the OBD STATUS for P0797 in the DTCs/ Freeze Data in A/T Mode Menu for a pass/fail.

    Does the HDS indicate PASSED?

    YES—Troubleshooting is complete. ■

    NO—If the HDS indicates FAILED, return to step 1 and recheck. If the HDS indicates NOT COMPLETED, return to step 12 and recheck.

DTC Troubleshooting (cont'd)

DTC P0842: Short in 2nd Clutch Transmission Fluid Pressure Switch Circuit, or 2nd Clutch Transmission Fluid Pressure Switch Stuck ON

NOTE:
- Before you troubleshoot, record all freeze data and any on-board snapshot, and review General Troubleshooting Information (see page 14-4).
- This code is caused by an electrical circuit problem and cannot be caused by a mechanical problem in the transmission.

1. Clear the DTC with the HDS.
2. Check the 2nd PRESSURE SWITCH signal with the HDS in the A/T data list when not in 2nd gear.

   Is the 2nd PRESSURE SWITCH OFF?

   YES—Go to step 3.

   NO—Go to step 6.
3. Start the engine, and warm it up to normal operating temperature (the radiator fan comes on).
4. Drive the vehicle in 2nd gear in the 2 position for more than 5 seconds, then shift to the D position, and drive in 3rd gear for more than 5 seconds. Slow down and stop the wheels.
5. Monitor the OBD STATUS for P0842 in the DTCs/ Freeze Data in A/T Mode Menu for a pass/fail.

   Does the HDS indicate FAILED?

   YES—Go to step 6.

   NO—Intermittent failure, the system is OK at this time. Check the OP2SW wire for an intermittent short to ground between the 2nd clutch transmission fluid pressure switch and the PCM. If the HDS indicates NOT COMPLETED, return to step 4 and recheck.
6. Turn the ignition switch OFF.
7. Disconnect the 2nd clutch transmission fluid pressure switch connector.
8. Turn the ignition switch ON (II).
9. Check the 2nd PRESSURE SWITCH signal with the HDS in the A/T data list.

   Is the 2nd PRESSURE SWITCH OFF?

   YES—Replace the 2nd clutch transmission fluid pressure switch (see page 14-234), then go to step 18.

   NO—Go to step 10.
10. Turn the ignition switch OFF.
11. Jump the SCS line with the HDS.
12. Disconnect PCM connector B (44P).
13. Check for continuity between PCM connector terminal B8 and body ground.

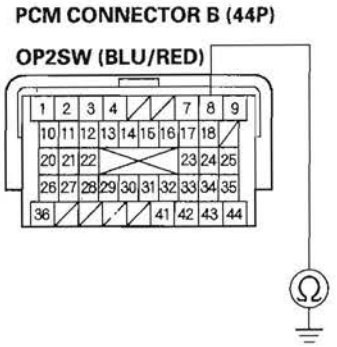

Terminal side of female terminals

Is there continuity?

YES—Repair short in the wire between PCM connector terminal B8 and the 2nd clutch transmission fluid pressure switch, then go to step 18.

NO—Go to step 14.

14. Update the A/T software in the PCM if it does not have the latest software (see page 14-9), or substitute a known-good PCM (see page 14-10).

15. Drive the vehicle in 2nd gear in the 2 position for more than 5 seconds, then shift to the D position, and drive in 3rd gear for more than 5 seconds. Slow down and stop the wheels.

16. Check for DTC(s) in the DTCs/Freeze Data in A/T Mode Menu with the HDS.

    Is DTC P0842 indicated?

    YES—If the PCM was updated, substitute a known-good PCM (see page 14-10), then recheck. If the PCM was substituted, go to step 1.

    NO—Go to step 17.

17. Monitor the OBD STATUS for P0842 in the DTCs/ Freeze Data in A/T Mode Menu for a pass/fail.

    Does the HDS indicate PASSED?

    YES—If the PCM was updated, troubleshooting is complete. If the PCM was substituted, replace the original PCM (see page 11-219). If any other DTCs were indicated on step 16, go to the indicated DTC's troubleshooting.■

    NO—If the HDS indicates FAILED, check for poor connections and loose terminals at the 2nd clutch transmission fluid pressure switch and the PCM. If the PCM was updated, substitute a known-good PCM (see page 14-10), then recheck. If the PCM was substituted, go to step 1. If the HDS indicates NOT COMPLETED, return to step 15 and recheck.

18. Clear the DTC with the HDS.

19. Drive the vehicle in 2nd gear in the 2 position for more than 5 seconds, then shift to the D position, and drive in 3rd gear for more than 5 seconds. Slow down and stop the wheels.

20. Check for DTC(s) in the DTCs/Freeze Data in A/T Mode Menu with the HDS.

    Is DTC P0842 indicated?

    YES—Check for poor connections and loose terminals at the 2nd clutch transmission fluid pressure switch and the PCM, then go to step 1.

    NO—Go to step 21.

21. Monitor the OBD STATUS for P0842 in the DTCs/ Freeze Data in A/T Mode Menu for a pass/fail.

    Does the HDS indicate PASSED?

    YES—Troubleshooting is complete. If any other DTCs were indicated on step 20, go to the indicated DTC's troubleshooting.■

    NO—If the HDS indicates FAILED, check for poor connections and loose terminals at the 2nd clutch transmission fluid pressure switch and the PCM, then go to step 1. If the HDS indicates NOT COMPLETED, return to step 19 and recheck.

DTC Troubleshooting (cont'd)

DTC P0843: Open in 2nd Clutch Transmission Fluid Pressure Switch Circuit, or 2nd Clutch Transmission Fluid Pressure Switch Stuck OFF

NOTE:
- Before you troubleshoot, record all freeze data and any on-board snapshot, and review General Troubleshooting Information (see page 14-4).
- This code is caused by an electrical circuit problem and cannot be caused by a mechanical problem in the transmission.

1. Clear the DTC with the HDS.
2. Start the engine, and warm it up to normal operating temperature (the radiator fan comes on).
3. Shift into the 2 position while pressing the brake pedal, and verify with the HDS in the A/T data list that the SHIFT COMMAND indicates 2nd.
4. Check the 2nd PRESSURE SWITCH signal with the HDS in the A/T data list.

   Is the 2nd PRESSURE SWITCH ON?

   YES—Go to step 5.

   NO—Go to step 7.
5. Drive the vehicle in 2nd gear in the 2 position for more than 5 seconds, then shift to the D position, and drive in 3rd gear for more than 5 seconds. Slow down and stop the wheels.
6. Monitor the OBD STATUS for P0843 in the DTCs/ Freeze Data in A/T Mode Menu for a pass/fail.

   Does the HDS indicate FAILED?

   YES—Go to step 7.

   NO—Intermittent failure, the system is OK at this time. Check for poor connections and loose terminals at the 2nd clutch transmission fluid pressure switch and the PCM. If the HDS indicates NOT COMPLETED, return to step 5 and recheck.

7. Turn the ignition switch OFF.

8. Disconnect the 2nd clutch transmission fluid pressure switch connector.

9. Turn the ignition switch ON (II).

10. Measure the voltage between the 2nd clutch transmission fluid pressure switch connector terminal and body ground.

2ND CLUTCH TRANSMISSION FLUID PRESSURE SWITCH CONNECTOR

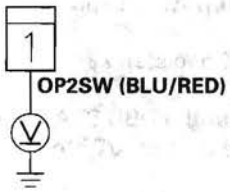

Wire side of female terminal

Is there about 5 V?

YES—Replace the 2nd clutch transmission fluid pressure switch (see page 14-234), then go to step 19.

NO—Go to step 11.

11. Turn the ignition switch OFF.

12. Jump the SCS line with the HDS.

13. Disconnect PCM connector B (44P).

14. Check for continuity between PCM connector terminal B8 and the 2nd clutch transmission fluid pressure switch connector terminal.

PCM CONNECTOR B (44P)

2ND CLUTCH TRANSMISSION FLUID PRESSURE SWITCH CONNECTOR

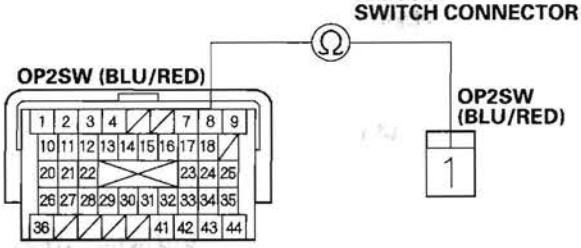

Terminal side of female terminals

Wire side of female terminal

Is there continuity?

YES—Check for poor connections and loose terminals at the 2nd clutch transmission fluid pressure switch and the PCM. If the connections are OK, go to step 15.

NO—Repair open in the wire between PCM connector terminal B8 and the 2nd clutch transmission fluid pressure switch, then go to step 19.

(cont'd)

DTC Troubleshooting (cont'd)

15. Update the A/T software in the PCM if it does not have the latest software (see page 14-9), or substitute a known-good PCM (see page 14-10).

16. Drive the vehicle in 2nd gear in the 2 position for more than 5 seconds, then shift to the D position, and drive in 3rd gear for more than 5 seconds. Slow down and stop the wheels.

17. Check for DTC(s) in the DTCs/Freeze Data in A/T Mode Menu with the HDS.

    Is DTC P0843 indicated?

    YES—If the PCM was updated, substitute a known-good PCM (see page 14-10), then recheck. If the PCM was substituted, go to step 1.

    NO—Go to step 18.

18. Monitor the OBD STATUS for P0843 in the DTCs/ Freeze Data in A/T Mode Menu for a pass/fail.

    Does the HDS indicate PASSED?

    YES—If the PCM was updated, troubleshooting is complete. If the PCM was substituted, replace the original PCM (see page 11-219). If any other DTCs were indicated on step 17, go to the indicated DTC's troubleshooting.■

    NO—If the HDS indicates FAILED, check for poor connections and loose terminals at the 2nd clutch transmission fluid pressure switch and the PCM. If the PCM was updated, substitute a known-good PCM (see page 14-10), then recheck. If the PCM was substituted, go to step 1. If the HDS indicates NOT COMPLETED, return to step 16 and recheck.

19. Clear the DTC with the HDS.

20. Drive the vehicle in 2nd gear in the 2 position for more than 5 seconds, then shift to the D position, and drive in 3rd gear for more than 5 seconds. Slow down and stop the wheels.

21. Check for DTC(s) in the DTCs/Freeze Data in A/T Mode Menu with the HDS.

    Is DTC P0843 indicated?

    YES—Check for poor connections and loose terminals at the 2nd clutch transmission fluid pressure switch and the PCM, then go to step 1.

    NO—Go to step 22.

22. Monitor the OBD STATUS for P0843 in the DTCs/ Freeze Data in A/T Mode Menu for a pass/fail.

    Does the HDS indicate PASSED?

    YES—Troubleshooting is complete. If any other DTCs were indicated on step 21, go to the indicated DTC's troubleshooting.■

    NO—If the HDS indicates FAILED, check for poor connections and loose terminals at the 2nd clutch transmission fluid pressure switch and the PCM, then go to step 1. If the HDS indicates NOT COMPLETED, return to step 20 and recheck.

DTC P0847: Short in 3rd Clutch Transmission Fluid Pressure Switch Circuit, or 3rd Clutch Transmission Fluid Pressure Switch Stuck ON

NOTE:
- Before you troubleshoot, record all freeze data and any on-board snapshot, and review General Troubleshooting Information (see page 14-4).
- This code is caused by an electrical circuit problem and cannot be caused by a mechanical problem in the transmission.

1. Clear the DTC with the HDS.
2. Check the 3rd PRESSURE SWITCH signal with the HDS in the A/T data list when not in 3rd gear.

   Is the 3rd PRESSURE SWITCH OFF?

   YES—Go to step 3.

   NO—Go to step 6.
3. Start the engine, and warm it up to normal operating temperature (the radiator fan comes on).
4. Drive the vehicle in 3rd gear in the D position D3 driving mode for more than 5 seconds, then release the D3 driving mode by pushing the D3 switch, and drive in 4th gear for more than 5 seconds. Slow down and stop the wheels.
5. Monitor the OBD STATUS for P0847 in the DTCs/ Freeze Data in A/T Mode Menu for a pass/fail.

   Does the HDS indicate FAILED?

   YES—Go to step 6.

   NO—Intermittent failure, the system is OK at this time. Check the OP3SW wire for an intermittent short to ground between the 3rd clutch transmission fluid pressure switch and the PCM. If the HDS indicates NOT COMPLETED, return to step 4 and recheck.
6. Turn the ignition switch OFF.
7. Disconnect the 3rd clutch transmission fluid pressure switch connector.
8. Turn the ignition switch ON (II).
9. Check the 3rd PRESSURE SWITCH signal with the HDS in the A/T data list.

   Is the 3rd PRESSURE SWITCH OFF?

   YES—Replace the 3rd clutch transmission fluid pressure switch (see page 14-234), then go to step 18.

   NO—Go to step 10.
10. Turn the ignition switch OFF.
11. Jump the SCS line with the HDS.
12. Disconnect PCM connector B (44P).
13. Check for continuity between PCM connector terminal B9 and body ground.

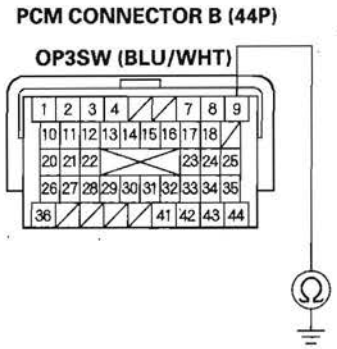

Terminal side of female terminals

Is there continuity?

YES—Repair short in the wire between PCM connector terminal B9 and the 3rd clutch transmission fluid pressure switch, then go to step 18.

NO—Go to step 14.

(cont'd)

DTC Troubleshooting (cont'd)

14. Update the A/T software in the PCM if it does not have the latest software (see page 14-9), or substitute a known-good PCM (see page 14-10).

15. Drive the vehicle in 3rd gear in the D position D3 driving mode for more than 5 seconds, then release the D3 driving mode by pushing the D3 switch, and drive in 4th gear for more than 5 seconds. Slow down and stop the wheels.

16. Check for DTC(s) in the DTCs/Freeze Data in A/T Mode Menu with the HDS.

    Is DTC P0847 indicated?

    YES—If the PCM was updated, substitute a known-good PCM (see page 14-10), then recheck. If the PCM was substituted, go to step 1.

    NO—Go to step 17.

17. Monitor the OBD STATUS for P0847 in the DTCs/ Freeze Data in A/T Mode Menu for a pass/fail.

    Does the HDS indicate PASSED?

    YES—If the PCM was updated, troubleshooting is complete. If the PCM was substituted, replace the original PCM (see page 11-219). If any other DTCs were indicated on step 16, go to the indicated DTC's troubleshooting. ■

    NO—If the HDS indicates FAILED, check for poor connections and loose terminals at the 3rd clutch transmission fluid pressure switch and the PCM. If the PCM was updated, substitute a known-good PCM (see page 14-10), then recheck. If the PCM was substituted, go to step 1. If the HDS indicates NOT COMPLETED, return to step 15 and recheck.

18. Clear the DTC with the HDS.

19. Drive the vehicle in 3rd gear in the D position D3 driving mode for more than 5 seconds, then release the D3 driving mode by pushing the D3 switch, and drive in 4th gear for more than 5 seconds. Slow down and stop the wheels.

20. Check for DTC(s) in the DTCs/Freeze Data in A/T Mode Menu with the HDS.

    Is DTC P0847 indicated?

    YES—Check for poor connections and loose terminals at the 3rd clutch transmission fluid pressure switch and the PCM, then go to step 1.

    NO—Go to step 21.

21. Monitor the OBD STATUS for P0847 in the DTCs/ Freeze Data in A/T Mode Menu for a pass/fail.

    Does the HDS indicate PASSED?

    YES—Troubleshooting is complete. If any other DTCs were indicated on step 20, go to the indicated DTC's troubleshooting. ■

    NO—If the HDS indicates FAILED, check for poor connections and loose terminals at the 3rd clutch transmission fluid pressure switch and the PCM, then go to step 1. If the HDS indicates NOT COMPLETED, return to step 19 and recheck.

DTC P0848: Open in 3rd Clutch Transmission Fluid Pressure Switch Circuit, or 3rd Clutch Transmission Fluid Pressure Switch Stuck OFF

NOTE:
- Before you troubleshoot, record all freeze data and any on-board snapshot, and review General Troubleshooting Information (see page 14-4).
- This code is caused by an electrical circuit problem and cannot be caused by a mechanical problem in the transmission.

1. Clear the DTC with the HDS.
2. Start the engine, and warm it up to normal operating temperature (the radiator fan comes on).
3. Drive the vehicle in 3rd gear in the D position D3 driving mode, and verify with the HDS in the A/T data list that the SHIFT COMMAND indicates 3rd.
4. Check the 3rd PRESSURE SWITCH signal with the HDS in the A/T data list.

   Is the 3rd PRESSURE SWITCH ON?

   YES—Go to step 5.

   NO—Go to step 7.
5. Drive the vehicle in 3rd gear in the D position D3 driving mode for more than 5 seconds, then release the D3 driving mode by pushing the D3 switch, and drive in 4th gear for more than 5 seconds. Slow down and stop the wheels.
6. Monitor the OBD STATUS for P0848 in the DTCs/ Freeze Data in A/T Mode Menu for a pass/fail.

   Does the HDS indicate FAILED?

   YES—Go to step 7.

   NO—Intermittent failure, the system is OK at this time. Check for poor connections or loose terminals at the 3rd clutch transmission fluid pressure switch and the PCM. If the HDS indicates NOT COMPLETED, return to step 5 and recheck.

(cont'd)

DTC Troubleshooting (cont'd)

7. Turn the ignition switch OFF.
8. Disconnect the 3rd clutch transmission fluid pressure switch connector.
9. Turn the ignition switch ON (II).
10. Measure the voltage between the 3rd clutch transmission fluid pressure switch connector terminal and body ground.

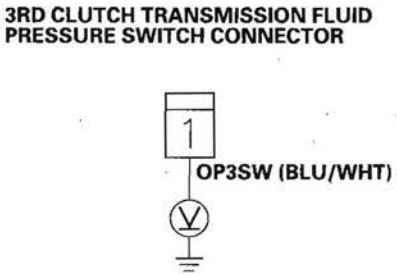

Wire side of female terminal

Is there about 5 V?

YES—Replace the 3rd clutch transmission fluid pressure switch (see page 14-234), then go to step 19.

NO—Go to step 11.

11. Turn the ignition switch OFF.
12. Jump the SCS line with the HDS.
13. Disconnect PCM connector B (44P).
14. Check for continuity between PCM connector terminal B9 and the 3rd clutch transmission fluid pressure switch connector terminal.

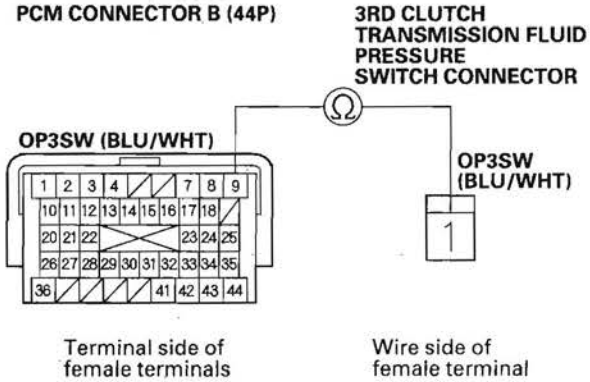

Terminal side of female terminals

Wire side of female terminal

Is there continuity?

YES—Check for poor connections and loose terminals at the 3rd clutch transmission fluid pressure switch and the PCM. If the connections are OK, go to step 15.

NO—Repair open in the wire between PCM connector terminal B9 and the 3rd clutch transmission fluid pressure switch, then go to step 19.

15. Update the A/T software in the PCM if it does not have the latest software (see page 14-9), or substitute a known-good PCM (see page 14-10).

16. Drive the vehicle in 3rd gear in the D position D3 driving mode for more than 5 seconds, then release the D3 driving mode by pushing the D3 switch, and drive in 4th gear for more than 5 seconds. Slow down and stop the wheels.

17. Check for DTC(s) in the DTCs/Freeze Data in A/T Mode Menu with the HDS.

    Is DTC P0848 indicated?

    YES—If the PCM was updated, substitute a known-good PCM (see page 14-10), then recheck. If the PCM was substituted, go to step 1.

    NO—Go to step 18.

18. Monitor the OBD STATUS for P0848 in the DTCs/ Freeze Data in A/T Mode Menu for a pass/fail.

    Does the HDS indicate PASSED?

    YES—If the PCM was updated, troubleshooting is complete. If the PCM was substituted, replace the original PCM (see page 11-219). If any other DTCs were indicated on step 17, go to the indicated DTC's troubleshooting. ■

    NO—If the HDS indicates FAILED, check for poor connections and loose terminals at the 3rd clutch transmission fluid pressure switch and the PCM. If the PCM was updated, substitute a known-good PCM (see page 14-10), then recheck. If the PCM was substituted, go to step 1. If the HDS indicates NOT COMPLETED, return to step 16 and recheck.

19. Clear the DTC with the HDS.

20. Drive the vehicle in 3rd gear in the D position D3 driving mode for more than 5 seconds, then release the D3 driving mode by pushing the D3 switch, and drive in 4th gear for more than 5 seconds. Slow down and stop the wheels.

21. Check for DTC(s) in the DTCs/Freeze Data in A/T Mode Menu with the HDS.

    Is DTC P0848 indicated?

    YES—Check for poor connections and loose terminals at the 3rd clutch transmission fluid pressure switch and the PCM, then go to step 1.

    NO—Go to step 22.

22. Monitor the OBD STATUS for P0848 in the DTCs/ Freeze Data in A/T Mode Menu for a pass/fail.

    Does the HDS indicate PASSED?

    YES—Troubleshooting is complete. If any other DTCs were indicated on step 21, go to the indicated DTC's troubleshooting. ■

    NO—If the HDS indicates FAILED, check for poor connections and loose terminals at the 3rd clutch transmission fluid pressure switch and the PCM, then go to step 1. If the HDS indicates NOT COMPLETED, return to step 20 and recheck.

DTC Troubleshooting (cont'd)

DTC P0962: Problem in A/T Clutch Pressure Control Solenoid Valve A Circuit

NOTE:
- Before you troubleshoot, record all freeze data and any on-board snapshot, and review General Troubleshooting Information (see page 14-4).
- This code is caused by an electrical circuit problem and cannot be caused by a mechanical problem in the transmission.

1. Clear the DTC with the HDS.
2. Check that DTC P0962 recurs.

   Is DTC P0962 indicated?

   YES—Go to step 6.

   NO—Go to step 3.
3. Choose Clutch Pressure Control (Linear) Solenoid A in the Miscellaneous Test Menu, and test A/T clutch pressure control solenoid valve A with the HDS.

   Does the HDS indicate NORMAL?

   YES—Go to step 4.

   NO—Go to step 6.
4. Choose Clutch Pressure Control Solenoid Control in the Miscellaneous Test Menu, and command A/T clutch pressure control solenoid valve A at 1.0 A with the HDS.
5. Monitor the OBD STATUS for P0962 in the DTCs/ Freeze Data in A/T Mode Menu for a pass/fail.

   Does the HDS indicate FAILED?

   YES—Go to step 6.

   NO—Intermittent failure, the system is OK at this time. Check for poor connections and loose terminals at A/T clutch pressure control solenoid valve A and the PCM. If the HDS indicates NOT COMPLETED, return to step 3 and recheck.
6. Turn the ignition switch OFF.
7. Disconnect the A/T clutch pressure control solenoid valve A connector.
8. Measure the resistance between A/T clutch pressure control solenoid valve A connector terminals No. 1 and No. 2.

A/T CLUTCH PRESSURE CONTROL SOLENOID VALVE A CONNECTOR

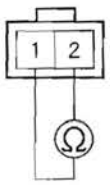

Terminal side of male terminals

Is there 3– 10 Ω ?

YES—Go to step 9.

NO—Replace A/T clutch pressure control solenoid valve A (see page 14-227), then go to step 16.

9. Check for continuity between A/T clutch pressure control solenoid valve A connector terminal No. 2 and body ground.

A/T CLUTCH PRESSURE CONTROL SOLENOID VALVE A CONNECTOR

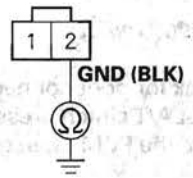

Wire side of female terminals

Is there continuity?

YES—Go to step 10.

NO—Repair open in the wire between A/T clutch pressure control solenoid valve A and ground (G101), or repair poor ground (G101), then go to step 16.

10. Turn the ignition switch ON (II).

11. Measure the voltage between A/T clutch pressure control solenoid valve A connector terminals No. 1 and No. 2.

A/T CLUTCH PRESSURE CONTROL SOLENOID VALVE A CONNECTOR

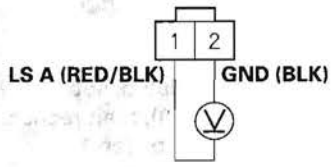

Wire side of female terminals

Is there voltage?

YES—Go to step 12.

NO—Repair open or short in the wire between PCM connector terminal B44 and A/T clutch pressure control solenoid valve A, then go to step 16.

(cont'd)

DTC Troubleshooting (cont'd)

12. Update the A/T software in the PCM if it does not have the latest software (see page 14-9), or substitute a known-good PCM (see page 14-10).

13. Test-drive the vehicle for several minutes in the D position through all five gears.

14. Check for DTC(s) in the DTCs/Freeze Data in A/T Mode Menu with the HDS.

    Is DTC P0962 indicated?

    YES—If the PCM was updated, substitute a known-good PCM (see page 14-10), then recheck. If the PCM was substituted, go to step 1.

    NO—Go to step 15.

15. Monitor the OBD STATUS for P0962 in the DTCs/Freeze Data in A/T Mode Menu for a pass/fail.

    Does the HDS indicate PASSED?

    YES—If the PCM was updated, troubleshooting is complete. If the PCM was substituted, replace the original PCM (see page 11-219). If any other DTCs were indicated on step 14, go to the indicated DTC's troubleshooting.■

    NO—If the HDS indicates FAILED, check for poor connections and loose terminals at A/T clutch pressure control solenoid valve A and the PCM. If the PCM was updated, substitute a known-good PCM (see page 14-10), then recheck. If the PCM was substituted, go to step 1. If the HDS indicates NOT COMPLETED, return to step 13 and recheck.

16. Clear the DTC with the HDS.

17. Test-drive the vehicle for several minutes in the D position through all five gears.

18. Check for DTC(s) in the DTCs/Freeze Data in A/T Mode Menu with the HDS.

    Is DTC P0962 indicated?

    YES—Check for poor connections and loose terminals at A/T clutch pressure control solenoid valve A and the PCM, then go to step 1.

    NO—Go to step 19.

19. Monitor the OBD STATUS for P0962 in the DTCs/Freeze Data in A/T Mode Menu for a pass/fail.

    Does the HDS indicate PASSED?

    YES—Troubleshooting is complete. If any other DTCs were indicated on step 18, go to the indicated DTC's troubleshooting.■

    NO—If the HDS indicates FAILED, check for poor connections and loose terminals at A/T clutch pressure control solenoid valve A and the PCM, then go to step 1. If the HDS indicates NOT COMPLETED, return to step 17 and recheck.

DTC P0963: Problem in A/T Clutch Pressure Control Solenoid Valve A

NOTE:
- Before you troubleshoot, record all freeze data and any on-board snapshot, and review General Troubleshooting Information (see page 14-4).
- This code is caused by an electrical circuit problem and cannot be caused by a mechanical problem in the transmission.

1. Clear the DTC with the HDS.
2. Check that DTC P0963 recurs.

   Is DTC P0963 indicated?

   YES—Go to step 6.

   NO—Go to step 3.
3. Choose Clutch Pressure Control (Linear) Solenoid A in the Miscellaneous Test Menu, and test A/T clutch pressure control solenoid valve A with the HDS.

   Does the HDS indicate NORMAL?

   YES—Go to step 4.

   NO—Go to step 6.
4. Choose Clutch Pressure Control Solenoid Control in the Miscellaneous Test Menu, and command A/T clutch pressure control solenoid valve A at 0.2 A with the HDS.
5. Monitor the OBD STATUS for P0963 in the DTCs/ Freeze Data in A/T Mode Menu for a pass/fail.

   Does the HDS indicate FAILED?

   YES—Go to step 6.

   NO—Intermittent failure, the system is OK at this time. Check for poor connections and loose terminals at A/T clutch pressure control solenoid valve A and the PCM. If the HDS indicates NOT COMPLETED, return to step 3 and recheck.
6. Turn the ignition switch OFF.
7. Disconnect the A/T clutch pressure control solenoid valve A connector.
8. Measure the resistance between A/T clutch pressure control solenoid valve A connector terminals No. 1 and No. 2.

A/T CLUTCH PRESSURE CONTROL SOLENOID VALVE A CONNECTOR

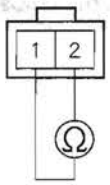

Terminal side of male terminals

Is there 3—10 Ω ?

YES—Go to step 9.

NO—Replace A/T clutch pressure control solenoid valve A (see page 14-227), then go to step 14.

9. Check for continuity between A/T clutch pressure control solenoid valve A connector terminal No. 2 and body ground.

A/T CLUTCH PRESSURE CONTROL SOLENOID VALVE A CONNECTOR

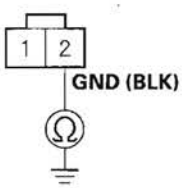

Wire side of female terminals

Is there continuity?

YES—Go to step 10.

NO—Repair open in the wire between A/T clutch pressure control solenoid valve A and ground (G101), or repair poor ground (G101), then go to step 10.

(cont'd)

DTC Troubleshooting (cont'd)

10. Update the A/T software in the PCM if it does not have the latest software (see page 14-9), or substitute a known-good PCM (see page 14-10).

11. Test-drive the vehicle for several minutes in the D position through all five gears.

12. Check for DTC(s) in the DTCs/Freeze Data in A/T Mode Menu with the HDS.

    Is DTC P0963 indicated?

    YES—If the PCM was updated, substitute a known-good PCM (see page 14-10), then recheck. If the PCM was substituted, go to step 1.

    NO—Go to step 13.

13. Monitor the OBD STATUS for P0963 in the DTCs/ Freeze Data in A/T Mode Menu for a pass/fail.

    Does the HDS indicate PASSED?

    YES—If the PCM was updated, troubleshooting is complete. If the PCM was substituted, replace the original PCM (see page 11-219). If any other DTCs were indicated on step 12, go to the indicated DTC's troubleshooting. ■

    NO—If the HDS indicates FAILED, check for poor connections and loose terminals at A/T clutch pressure control solenoid valve A and the PCM. If the PCM was updated, substitute a known-good PCM (see page 14-10), then recheck. If the PCM was substituted, go to step 1. If the HDS indicates NOT COMPLETED, return to step 11 and recheck.

14. Clear the DTC with the HDS.

15. Test-drive the vehicle for several minutes in the D position through all five gears.

16. Check for DTC(s) in the DTCs/Freeze Data in A/T Mode Menu with the HDS.

    Is DTC P0963 indicated?

    YES—Check for poor connections and loose terminals at A/T clutch pressure control solenoid valve A and the PCM, then go to step 1.

    NO—Go to step 17.

17. Monitor the OBD STATUS for P0963 in the DTCs/ Freeze Data in A/T Mode Menu for a pass/fail.

    Does the HDS indicate PASSED?

    YES—Troubleshooting is complete. If any other DTCs were indicated on step 16, go to the indicated DTC's troubleshooting. ■

    NO—If the HDS indicates FAILED, check for poor connections and loose terminals at A/T clutch pressure control solenoid valve A and the PCM, then go to step 1. If the HDS indicates NOT COMPLETED, return to step 15 and recheck.

DTC P0966: Problem in A/T Clutch Pressure Control Solenoid Valve B Circuit

NOTE:
- Before you troubleshoot, record all freeze data and any on-board snapshot, and review General Troubleshooting Information (see page 14-4).
- This code is caused by an electrical circuit problem and cannot be caused by a mechanical problem in the transmission.

1. Clear the DTC with the HDS.
2. Check that DTC P0966 recurs.

   Is DTC P0966 indicated?

   YES—Go to step 6.

   NO—Go to step 3.
3. Choose Clutch Pressure Control (Linear) Solenoid B in the Miscellaneous Test Menu, and test A/T clutch pressure control solenoid valve B with the HDS.

   Does the HDS indicate NORMAL?

   YES—Go to step 4.

   NO—Go to step 6.
4. Choose Clutch Pressure Control Solenoid Control in the Miscellaneous Test Menu, and command A/T clutch pressure control solenoid valve B at 1.0 A with the HDS.
5. Monitor the OBD STATUS for P0966 in the DTCs/ Freeze Data in A/T Mode Menu for a pass/fail.

   Does the HDS indicate FAILED?

   YES—Go to step 6.

   NO—Intermittent failure, the system is OK at this time. Check for poor connections and loose terminals at A/T clutch pressure control solenoid valve B and the PCM. If the HDS indicates NOT COMPLETED, return to step 3 and recheck.
6. Turn the ignition switch OFF.
7. Disconnect the A/T clutch pressure control solenoid valve B connector.
8. Measure the resistance between A/T clutch pressure control solenoid valve B connector terminals No. 1 and No. 2.

A/T CLUTCH PRESSURE CONTROL SOLENOID VALVE B CONNECTOR

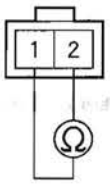

Terminal side of male terminals

Is there 3– 10 Ω ?

YES—Go to step 9.

NO—Replace A/T clutch pressure control solenoid valve B (see page 14-232), then go to step 16.

(cont'd)

DTC Troubleshooting (cont'd)

9. Check for continuity between A/T clutch pressure control solenoid valve B connector terminal No. 2 and body ground.

A/T CLUTCH PRESSURE CONTROL SOLENOID VALVE B CONNECTOR

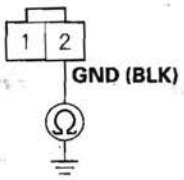

Wire side of female terminals

Is there continuity?

YES—Go to step 10.

NO—Repair open in the wire between A/T clutch pressure control solenoid valve B and ground (G101), or repair poor ground (G101), then go to step 16.

10. Turn the ignition switch ON (II).

11. Measure the voltage between A/T clutch pressure control solenoid valve B connector terminals No. 1 and No. 2.

A/T CLUTCH PRESSURE CONTROL SOLENOID VALVE B CONNECTOR

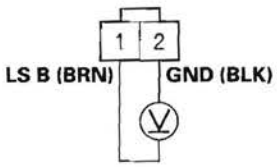

Wire side of female terminals

Is there voltage?

YES—Go to step 12.

NO—Repair open or short in the wire between PCM connector terminal B35 and A/T clutch pressure control solenoid valve B, then go to step 16.

12. Update the A/T software in the PCM if it does not have the latest software (see page 14-9), or substitute a known-good PCM (see page 14-10).

13. Test-drive the vehicle for several minutes in the D position through all five gears.

14. Check for DTC(s) in the DTCs/Freeze Data in A/T Mode Menu with the HDS.

    Is DTC P0966 indicated?

    YES—If the PCM was updated, substitute a known-good PCM (see page 14-10), then recheck. If the PCM was substituted, go to step 1.

    NO—Go to step 15.

15. Monitor the OBD STATUS for P0966 in the DTCs/ Freeze Data in A/T Mode Menu for a pass/fail.

    Does the HDS indicate PASSED?

    YES—If the PCM was updated, troubleshooting is complete. If the PCM was substituted, replace the original PCM (see page 11-219). If any other DTCs were indicated on step 14, go to the indicated DTC's troubleshooting.■

    NO—If the HDS indicates FAILED, check for poor connections and loose terminals at A/T clutch pressure control solenoid valve B and the PCM. If the PCM was updated, substitute a known-good PCM (see page 14-10), then recheck. If the PCM was substituted, go to step 1. If the HDS indicates NOT COMPLETED, return to step 13 and recheck.

16. Clear the DTC with the HDS.

17. Test-drive the vehicle for several minutes in the D position through all five gears.

18. Check for DTC(s) in the DTCs/Freeze Data in A/T Mode Menu with the HDS.

    Is DTC P0966 indicated?

    YES—Check for poor connections and loose terminals at A/T clutch pressure control solenoid valve B and the PCM, then go to step 1.

    NO—Go to step 19.

19. Monitor the OBD STATUS for P0966 in the DTCs/ Freeze Data in A/T Mode Menu for a pass/fail.

    Does the HDS indicate PASSED?

    YES—Troubleshooting is complete. If any other DTCs were indicated on step 18, go to the indicated DTC's troubleshooting.■

    NO—If the HDS indicates FAILED, check for poor connections and loose terminals at A/T clutch pressure control solenoid valve B and the PCM, then go to step 1. If the HDS indicates NOT COMPLETED, return to step 17 and recheck.

DTC Troubleshooting (cont'd)

DTC P0967: Problem in A/T Clutch Pressure Control Solenoid Valve B

NOTE:
- Before you troubleshoot, record all freeze data and any on-board snapshot, and review General Troubleshooting Information (see page 14-4).
- This code is caused by an electrical circuit problem and cannot be caused by a mechanical problem in the transmission.

1. Clear the DTC with the HDS.
2. Check that DTC P0967 recurs.

   Is DTC P0967 indicated?

   YES—Go to step 6.

   NO—Go to step 3.
3. Choose Clutch Pressure Control (Linear) Solenoid B in the Miscellaneous Test Menu, and test A/T clutch pressure control solenoid valve B with the HDS.

   Does the HDS indicate NORMAL?

   YES—Go to step 4.

   NO—Go to step 6.
4. Choose Clutch Pressure Control Solenoid Control in the Miscellaneous Test Menu, and command A/T clutch pressure control solenoid valve B at 0.2 A with the HDS.
5. Monitor the OBD STATUS for P0967 in the DTCs/ Freeze Data in A/T Mode Menu for a pass/fail.

   Does the HDS indicate FAILED?

   YES—Go to step 6.

   NO—Intermittent failure, the system is OK at this time. Check for poor connections and loose terminals at A/T clutch pressure control solenoid valve B and the PCM. If the HDS indicates NOT COMPLETED, return to step 3 and recheck.
6. Turn the ignition switch OFF.
7. Disconnect the A/T clutch pressure control solenoid valve B connector.
8. Measure the resistance between A/T clutch pressure control solenoid valve B connector terminals No. 1 and No. 2.

   A/T CLUTCH PRESSURE CONTROL SOLENOID VALVE B CONNECTOR

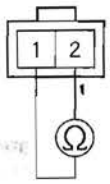

   Terminal side of male terminals

   Is there 3— 10 Ω ?

   YES—Go to step 9.

   NO—Replace A/T clutch pressure control solenoid valve B (see page 14-232), then go to step 14.
9. Check for continuity between A/T clutch pressure control solenoid valve B connector terminal No. 2 and body ground.

   A/T CLUTCH PRESSURE CONTROL SOLENOID VALVE B CONNECTOR

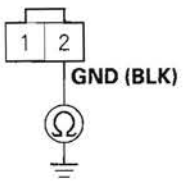

   Wire side of female terminals

   Is there continuity?

   YES—Go to step 10.

   NO—Repair open in the wire between A/T clutch pressure control solenoid valve B and ground (G101), or repair poor ground (G101), then go to step 14.

10. Update the A/T software in the PCM if it does not have the latest software (see page 14-9), or substitute a known-good PCM (see page 14-10).

11. Test-drive the vehicle for several minutes in the D position through all five gears.

12. Check for DTC(s) in the DTCs/Freeze Data in A/T Mode Menu with the HDS.

    Is DTC P0967 indicated?

    YES—If the PCM was updated, substitute a known-good PCM (see page 14-10), then recheck. If the PCM was substituted, go to step 1.

    NO—Go to step 13.

13. Monitor the OBD STATUS for P0967 in the DTCs/ Freeze Data in A/T Mode Menu for a pass/fail.

    Does the HDS indicate PASSED?

    YES—If the PCM was updated, troubleshooting is complete. If the PCM was substituted, replace the original PCM (see page 11-219). If any other DTCs were indicated on step 12, go to the indicated DTC's troubleshooting.■

    NO—If the HDS indicates FAILED, check for poor connections and loose terminals at A/T clutch pressure control solenoid valve B and the PCM. If the PCM was updated, substitute a known-good PCM (see page 14-10), then recheck. If the PCM was substituted, go to step 1. If the HDS indicates NOT COMPLETED, return to step 11 and recheck.

14. Clear the DTC with the HDS.

15. Test-drive the vehicle for several minutes in the D position through all five gears.

16. Check for DTC(s) in the DTCs/Freeze Data in A/T Mode Menu with the HDS.

    Is DTC P0967 indicated?

    YES—Check for poor connections and loose terminals at A/T clutch pressure control solenoid valve B and the PCM, then go to step 1.

    NO—Go to step 17.

17. Monitor the OBD STATUS for P0967 in the DTCs/ Freeze Data in A/T Mode Menu for a pass/fail.

    Does the HDS indicate PASSED?

    YES—Troubleshooting is complete. If any other DTCs were indicated on step 16, go to the indicated DTC's troubleshooting.■

    NO—If the HDS indicates FAILED, check for poor connections and loose terminals at A/T clutch pressure control solenoid valve B and the PCM, then go to step 1. If the HDS indicates NOT COMPLETED, return to step 15 and recheck.

DTC Troubleshooting (cont'd)

DTC P0970: Problem in A/T Clutch Pressure Control Solenoid Valve C Circuit

NOTE:
- Before you troubleshoot, record all freeze data and any on-board snapshot, and review General Troubleshooting Information (see page 14-4).
- This code is caused by an electrical circuit problem and cannot be caused by a mechanical problem in the transmission.

1. Clear the DTC with the HDS.
2. Check that DTC P0970 recurs.

   Is DTC P0970 indicated?

   YES—Go to step 6.

   NO—Go to step 3.
3. Choose Clutch Pressure Control (Linear) Solenoid C in the Miscellaneous Test Menu, and test A/T clutch pressure control solenoid valve C with the HDS.

   Does the HDS indicate NORMAL?

   YES—Go to step 4.

   NO—Go to step 6.
4. Choose Clutch Pressure Control Solenoid Control in the Miscellaneous Test Menu, and command A/T clutch pressure control solenoid valve C at 1.0 A with the HDS.
5. Monitor the OBD STATUS for P0970 in the DTCs/ Freeze Data in A/T Mode Menu for a pass/fail.

   Does the HDS indicate FAILED?

   YES—Go to step 6.

   NO—Intermittent failure, the system is OK at this time. Check for poor connections and loose terminals at A/T clutch pressure control solenoid valve C and the PCM. If the HDS indicates NOT COMPLETED, return to step 3 and recheck.
6. Turn the ignition switch OFF.
7. Disconnect the A/T clutch pressure control solenoid valve C connector.
8. Measure the resistance between A/T clutch pressure control solenoid valve C connector terminals No. 1 and No. 2.

A/T CLUTCH PRESSURE CONTROL SOLENOID VALVE C CONNECTOR

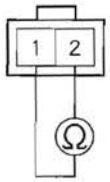

Terminal side of male terminals

Is there 3– 10 Ω ?

YES—Go to step 9.

NO—Replace A/T clutch pressure control solenoid valve C (see page 14-232), then go to step 16.

9. Check for continuity between A/T clutch pressure control solenoid valve C connector terminal No. 2 and body ground.

A/T CLUTCH PRESSURE CONTROL SOLENOID VALVE C CONNECTOR

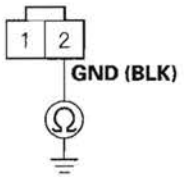

Wire side of female terminals

Is there continuity?

YES—Go to step 10.

NO—Repair open in the wire between A/T clutch pressure control solenoid valve C and ground (G101), or repair poor ground (G101), then go to step 16.

10. Turn the ignition switch ON (II).

11. Measure the voltage between A/T clutch pressure control solenoid valve C connector terminals No. 1 and No. 2.

A/T CLUTCH PRESSURE CONTROL SOLENOID VALVE C CONNECTOR

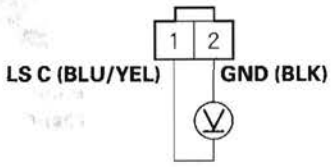

Wire side of female terminals

Is there voltage?

YES—Go to step 12.

NO—Repair open or short in the wire between PCM connector terminal B25 and A/T clutch pressure control solenoid valve C, then go to step 16.

(cont'd)

DTC Troubleshooting (cont'd)

12. Update the A/T software in the PCM if it does not have the latest software (see page 14-9), or substitute a known-good PCM (see page 14-10).

13. Test-drive the vehicle for several minutes in the D position through all five gears.

14. Check for DTC(s) in the DTCs/Freeze Data in A/T Mode Menu with the HDS.

    Is DTC P0970 indicated?

    YES—If the PCM was updated, substitute a known-good PCM (see page 14-10), then recheck. If the PCM was substituted, go to step 1.

    NO—Go to step 15.

15. Monitor the OBD STATUS for P0970 in the DTCs/ Freeze Data in A/T Mode Menu for a pass/fail.

    Does the HDS indicate PASSED?

    YES—If the PCM was updated, troubleshooting is complete. If the PCM was substituted, replace the original PCM (see page 11-219). If any other DTCs were indicated on step 14, go to the indicated DTC's troubleshooting.■

    NO—If the HDS indicates FAILED, check for poor connections and loose terminals at A/T clutch pressure control solenoid valve C and the PCM. If the PCM was updated, substitute a known-good PCM (see page 14-10), then recheck. If the PCM was substituted, go to step 1. If the HDS indicates NOT COMPLETED, return to step 13 and recheck.

16. Clear the DTC with the HDS.

17. Test-drive the vehicle for several minutes in the D position through all five gears.

18. Check for DTC(s) in the DTCs/Freeze Data in A/T Mode Menu with the HDS.

    Is DTC P0970 indicated?

    YES—Check for poor connections and loose terminals at A/T clutch pressure control solenoid valve C and the PCM, then go to step 1.

    NO—Go to step 19.

19. Monitor the OBD STATUS for P0970 in the DTCs/ Freeze Data in A/T Mode Menu for a pass/fail.

    Does the HDS indicate PASSED?

    YES—Troubleshooting is complete. If any other DTCs were indicated on step 18, go to the indicated DTC's troubleshooting.■

    NO—If the HDS indicates FAILED, check for poor connections and loose terminals at A/T clutch pressure control solenoid valve C and the PCM, then go to step 1. If the HDS indicates NOT COMPLETED, return to step 17 and recheck.

DTC P0971: Problem in A/T Clutch Pressure Control Solenoid Valve C

NOTE:
- Before you troubleshoot, record all freeze data and any on-board snapshot, and review General Troubleshooting Information (see page 14-4).
- This code is caused by an electrical circuit problem and cannot be caused by a mechanical problem in the transmission.

1. Clear the DTC with the HDS.
2. Check that DTC P0971 recurs.

   Is DTC P0971 indicated?

   YES—Go to step 6.

   NO—Go to step 3.
3. Choose Clutch Pressure Control (Linear) Solenoid C in the Miscellaneous Test Menu, and test A/T clutch pressure control solenoid valve C with the HDS.

   Does the HDS indicate NORMAL?

   YES—Go to step 4.

   NO—Go to step 6.
4. Choose Clutch Pressure Control Solenoid Control in the Miscellaneous Test Menu, and command A/T clutch pressure control solenoid valve C at 0.2 A with the HDS.
5. Monitor the OBD STATUS for P0971 in the DTCs/ Freeze Data in A/T Mode Menu for a pass/fail.

   Does the HDS indicate FAILED?

   YES—Go to step 6.

   NO—Intermittent failure, the system is OK at this time. Check for poor connections and loose terminals at A/T clutch pressure control solenoid valve C and the PCM. If the HDS indicates NOT COMPLETED, return to step 3 and recheck.
6. Turn the ignition switch OFF.
7. Disconnect the A/T clutch pressure control solenoid valve C connector.
8. Measure the resistance between A/T clutch pressure control solenoid valve C connector terminals No. 1 and No. 2.

A/T CLUTCH PRESSURE CONTROL SOLENOID VALVE C CONNECTOR

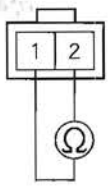

Terminal side of male terminals

Is there 3 – 10 Ω ?

YES—Go to step 9.

NO—Replace A/T clutch pressure control solenoid valve C (see page 14-232), then go to step 14.

9. Check for continuity between A/T clutch pressure control solenoid valve C connector terminal No. 2 and body ground.

A/T CLUTCH PRESSURE CONTROL SOLENOID VALVE C CONNECTOR

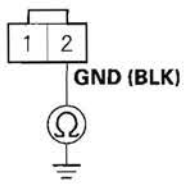

Wire side of female terminals

Is there continuity?

YES—Go to step 10.

NO—Repair open in the wire between A/T clutch pressure control solenoid valve C and ground (G101), or repair poor ground (G101), then go to step 10.

(cont'd)

DTC Troubleshooting (cont'd)

10. Update the A/T software in the PCM if it does not have the latest software (see page 14-9), or substitute a known-good PCM (see page 14-10).

11. Test-drive the vehicle for several minutes in the D position through all five gears.

12. Check for DTC(s) in the DTCs/Freeze Data in A/T Mode Menu with the HDS.

    Is DTC P0971 indicated?

    YES—If the PCM was updated, substitute a known-good PCM (see page 14-10), then recheck. If the PCM was substituted, go to step 1.

    NO—Go to step 13.

13. Monitor the OBD STATUS for P0971 in the DTCs/ Freeze Data in A/T Mode Menu for a pass/fail.

    Does the HDS indicate PASSED?

    YES—If the PCM was updated, troubleshooting is complete. If the PCM was substituted, replace the original PCM (see page 11-219). If any other DTCs were indicated on step 12, go to the indicated DTC's troubleshooting. ■

    NO—If the HDS indicates FAILED, check for poor connections and loose terminals at A/T clutch pressure control solenoid valve C and the PCM. If the PCM was updated, substitute a known-good PCM (see page 14-10), then recheck. If the PCM was substituted, go to step 1. If the HDS indicates NOT COMPLETED, return to step 11 and recheck.

14. Clear the DTC with the HDS.

15. Test-drive the vehicle for several minutes in the D position through all five gears.

16. Check for DTC(s) in the DTCs/Freeze Data in A/T Mode Menu with the HDS.

    Is DTC P0971 indicated?

    YES—Check for poor connections and loose terminals at A/T clutch pressure control solenoid valve C and the PCM, then go to step 1.

    NO—Go to step 17.

17. Monitor the OBD STATUS for P0971 in the DTCs/ Freeze Data in A/T Mode Menu for a pass/fail.

    Does the HDS indicate PASSED?

    YES—Troubleshooting is complete. If any other DTCs were indicated on step 16, go to the indicated DTC's troubleshooting. ■

    NO—If the HDS indicates FAILED, check for poor connections and loose terminals at A/T clutch pressure control solenoid valve C and the PCM, then go to step 1. If the HDS indicates NOT COMPLETED, return to step 15 and recheck.

DTC P0973: Short in Shift Solenoid Valve A Circuit

NOTE:
- Before you troubleshoot, record all freeze data and any on-board snapshot, and review General Troubleshooting Information (see page 14-4).
- This code is caused by an electrical circuit problem and cannot be caused by a mechanical problem in the transmission.

1. Clear the DTC with the HDS.
2. Start the engine, and shift to the D position.
3. Check that DTC P0973 recurs.

   Is DTC P0973 indicated?

   YES—Go to step 7.

   NO—Go to step 4.
4. Choose Shift Solenoid A in the Miscellaneous Test Menu, and test shift solenoid valve A with the HDS.

   Is a clicking sound heard?

   YES—Go to step 5.

   NO—Go to step 7.
5. Start the engine, and shift to the D position.
6. Monitor the OBD STATUS for P0973 in the DTCs/ Freeze Data in A/T Mode Menu for a pass/fail.

   Does the HDS indicate FAILED?

   YES—Go to step 7.

   NO—Intermittent failure, the system is OK at this time. Check the SH A wire for an intermittent short to ground between shift solenoid valve A and the PCM. If the HDS indicates NOT COMPLETED, return to step 4 and recheck.
7. Turn the ignition switch OFF.
8. Jump the SCS line with the HDS.
9. Disconnect PCM connectors B (44P) and C (44P).
10. Measure the resistance between PCM connector terminals B10 and C40.

PCM CONNECTORS

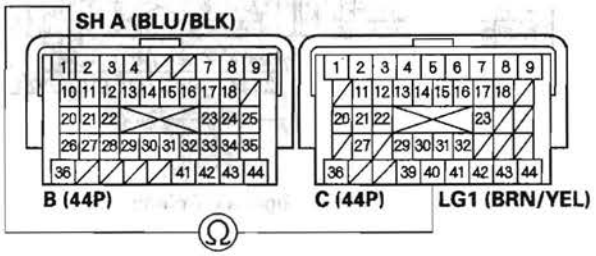

Terminal side of female terminals

Is there less than 12 Ω ?

YES—Go to step 11.

NO—Go to step 14.

(cont'd)

DTC Troubleshooting (cont'd)

11. Disconnect the shift solenoid harness connector.

12. Check for continuity between PCM connector terminals B10 and C40.

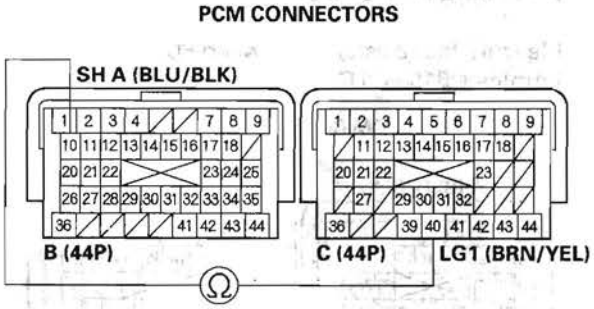

Terminal side of female terminals

Is there continuity?

YES—Repair short in the wire between PCM connector terminal B10 and the shift solenoid harness connector, then go to step 18.

NO—Go to step 13.

13. Inspect shift solenoid valve A (see page 14-218).

Is shift solenoid valve A OK?

YES—Go to step 14.

NO—Replace shift solenoid valve A or the shift solenoid harness (see page 14-222), then go to step 18.

14. Update the A/T software in the PCM if it does not have the latest software (see page 14-9), or substitute a known-good PCM (see page 14-10).

15. Start the engine, and shift to the D position.

16. Check for DTC(s) in the DTCs/Freeze Data in A/T Mode Menu with the HDS.

Is DTC P0973 indicated?

YES—If the PCM was updated, substitute a known-good PCM (see page 14-10), then recheck. If the PCM was substituted, go to step 1.

NO—Go to step 17.

17. Monitor the OBD STATUS for P0973 in the DTCs/ Freeze Data in A/T Mode Menu for a pass/fail.

Does the HDS indicate PASSED?

YES—If the PCM was updated, troubleshooting is complete. If the PCM was substituted, replace the original PCM (see page 11-219). If any other DTCs were indicated on step 16, go to the indicated DTC's troubleshooting.■

NO—If the HDS indicates FAILED, check for poor connections and loose terminals at shift solenoid valve A and the PCM. If the PCM was updated, substitute a known-good PCM (see page 14-10), then recheck. If the PCM was substituted, go to step 1. If the HDS indicates NOT COMPLETED, return to step 15 and recheck.

18. Clear the DTC with the HDS.

19. Start the engine, and shift to the D position.

20. Check for DTC(s) in the DTCs/Freeze Data in A/T Mode Menu with the HDS.

    Is DTC P0973 indicated?

    YES—Check for poor connections and loose terminals at shift solenoid valve A and the PCM, then go to step 1.

    NO—Go to step 21.

21. Monitor the OBD STATUS for P0973 in the DTCs/ Freeze Data in A/T Mode Menu for a pass/fail.

    Does the HDS indicate PASSED?

    YES—Troubleshooting is complete. If any other DTCs were indicated on step 20, go to the indicated DTC's troubleshooting. ■

    NO—If the HDS indicates FAILED, check for poor connections and loose terminals at shift solenoid valve A and the PCM, then go to step 1. If the HDS indicates NOT COMPLETED, return to step 19 and recheck.

DTC Troubleshooting (cont'd)

DTC P0974: Open in Shift Solenoid Valve A Circuit

NOTE:
- Before you troubleshoot, record all freeze data and any on-board snapshot, and review General Troubleshooting Information (see page 14-4).
- This code is caused by an electrical circuit problem and cannot be caused by a mechanical problem in the transmission.

1. Clear the DTC with the HDS.
2. Start the engine in the P position.
3. Check that DTC P0974 recurs.

   Is DTC P0974 indicated?

   YES—Go to step 7.

   NO—Go to step 4.
4. Choose Shift Solenoid A in the Miscellaneous Test Menu, and test shift solenoid valve A with the HDS.

   Is a clicking sound heard?

   YES—Go to step 5.

   NO—Go to step 7.
5. Start the engine in the P position.
6. Monitor the OBD STATUS for P0974 in the DTCs/ Freeze Data in A/T Mode Menu for a pass/fail.

   Does the HDS indicate FAILED?

   YES—Go to step 7.

   NO—Intermittent failure, the system is OK at this time. Check for poor connections or loose terminals at shift solenoid valve A and the PCM. If the HDS indicates NOT COMPLETED, return to step 4 and recheck.
7. Turn the ignition switch OFF.
8. Jump the SCS line with the HDS.
9. Disconnect PCM connectors B (44P) and C (44P).
10. Measure the resistance between PCM connector terminals B10 and C40.

PCM CONNECTORS

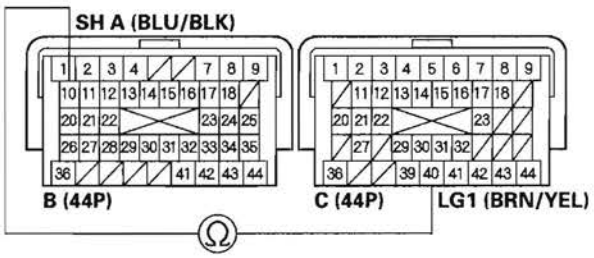

Terminal side of female terminals

Is there 12–25 Ω?

YES—Go to step 15.

NO—Go to step 11.

11. Disconnect the shift solenoid harness connector.

12. Check for continuity between PCM connector terminal B10 and shift solenoid harness connector terminal No. 5.

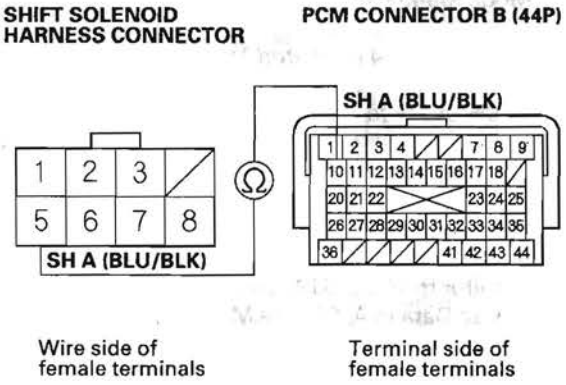

Is there continuity?

YES—Go to step 13.

NO—Repair open in the wire between PCM connector terminal B10 and the shift solenoid harness connector, then go to step 19.

13. Remove the shift solenoid harness (see page 14-222).

14. Check for continuity between shift solenoid harness connector terminal No. 5 and the shift solenoid valve A connector terminal.

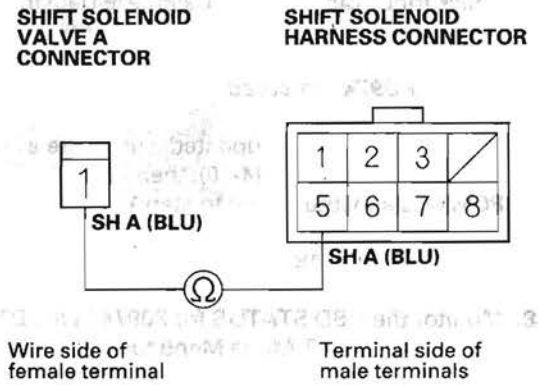

Is there continuity?

YES—Replace shift solenoid valve A (see page 14-222), then go to step 19.

NO—Replace the shift solenoid harness (see page 14-222), then go to step 19.

(cont'd)

DTC Troubleshooting (cont'd)

15. Update the A/T software in the PCM if it does not have the latest software (see page 14-9), or substitute a known-good PCM (see page 14-10).

16. Start the engine in the P position.

17. Check for DTC(s) in the DTCs/Freeze Data in A/T Mode Menu with the HDS.

    Is DTC P0974 indicated?

    YES—If the PCM was updated, substitute a known-good PCM (see page 14-10), then recheck. If the PCM was substituted, go to step 1.

    NO—Go to step 18.

18. Monitor the OBD STATUS for P0974 in the DTCs/ Freeze Data in A/T Mode Menu for a pass/fail.

    Does the HDS indicate PASSED?

    YES—If the PCM was updated, troubleshooting is complete. If the PCM was substituted, replace the original PCM (see page 11-219). If any other DTCs were indicated on step 17, go to the indicated DTC's troubleshooting. ■

    NO—If the HDS indicates FAILED, check for poor connections and loose terminals at shift solenoid valve A and the PCM. If the PCM was updated, substitute a known-good PCM (see page 14-10), then recheck. If the PCM was substituted, go to step 1. If the HDS indicates NOT COMPLETED, return to step 16 and recheck.

19. Clear the DTC with the HDS.

20. Start the engine in the P position.

21. Check for DTC(s) in the DTCs/Freeze Data in A/T Mode Menu with the HDS.

    Is DTC P0974 indicated?

    YES—Check for poor connections and loose terminals at shift solenoid valve A and the PCM, then go to step 1.

    NO—Go to step 22.

22. Monitor the OBD STATUS for P0974 in the DTCs/ Freeze Data in A/T Mode Menu for a pass/fail.

    Does the HDS indicate PASSED?

    YES—Troubleshooting is complete. If any other DTCs were indicated on step 21, go to the indicated DTC's troubleshooting. ■

    NO—If the HDS indicates FAILED, check for poor connections and loose terminals at shift solenoid valve A and the PCM, then go to step 1. If the HDS indicates NOT COMPLETED, return to step 20 and recheck.

DTC P0976: Short in Shift Solenoid Valve B Circuit

NOTE:
- Before you troubleshoot, record all freeze data and any on-board snapshot, and review General Troubleshooting Information (see page 14-4).
- This code is caused by an electrical circuit problem and cannot be caused by a mechanical problem in the transmission.

1. Clear the DTC with the HDS.
2. Start the engine in the P position.
3. Check that DTC P0976 recurs.

   Is DTC P0976 indicated?

   YES—Go to step 7.

   NO—Go to step 4.
4. Choose Shift Solenoid B in the Miscellaneous Test Menu, and test shift solenoid valve B with the HDS.

   Is a clicking sound heard?

   YES—Go to step 5.

   NO—Go to step 7.
5. Start the engine in the P position.
6. Monitor the OBD STATUS for P0976 in the DTCs/ Freeze Data in A/T Mode Menu for a pass/fail.

   Does the HDS indicate FAILED?

   YES—Go to step 7.

   NO—Intermittent failure, the system is OK at this time. Check the SH B wire for an intermittent short to ground between shift solenoid valve B and the PCM. If the HDS indicates NOT COMPLETED, return to step 4 and recheck.
7. Turn the ignition switch OFF.
8. Jump the SCS line with the HDS.
9. Disconnect PCM connectors B (44P) and C (44P).
10. Measure the resistance between PCM connector terminals B11 and C40.

PCM CONNECTORS

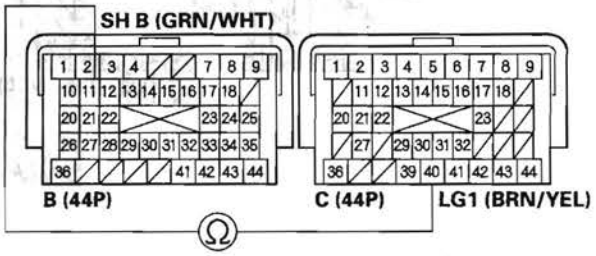

Terminal side of female terminals

Is there less than 12 Ω ?

YES—Go to step 11.

NO—Go to step 14.

(cont'd)

DTC Troubleshooting (cont'd)

11. Disconnect the shift solenoid harness connector.

12. Check for continuity between PCM connector terminals B11 and C40.

PCM CONNECTORS

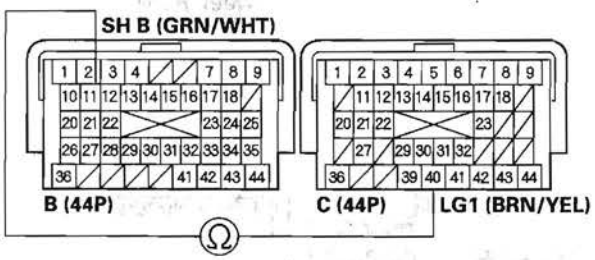

Terminal side of female terminals

Is there continuity?

YES—Repair short in the wire between PCM connector terminal B11 and the shift solenoid harness connector, then go to step 18.

NO—Go to step 13.

13. Inspect shift solenoid valve B (see page 14-218).

Is shift solenoid valve B OK?

YES—Go to step 14.

NO—Replace shift solenoid valve B or the shift solenoid harness (see page 14-222), then go to step 18.

14. Update the A/T software in the PCM if it does not have the latest software (see page 14-9), or substitute a known-good PCM (see page 14-10).

15. Start the engine in the P position.

16. Check for DTC(s) in the DTCs/Freeze Data in A/T Mode Menu with the HDS.

Is DTC P0976 indicated?

YES—If the PCM was updated, substitute a known-good PCM (see page 14-10), then recheck. If the PCM was substituted, go to step 1.

NO—Go to step 17.

17. Monitor the OBD STATUS for P0976 in the DTCs/ Freeze Data in A/T Mode Menu for a pass/fail.

Does the HDS indicate PASSED?

YES—If the PCM was updated, troubleshooting is complete. If the PCM was substituted, replace the original PCM (see page 11-219). If any other DTCs were indicated on step 16, go to the indicated DTC's troubleshooting. ■

NO—If the HDS indicates FAILED, check for poor connections and loose terminals at shift solenoid valve B and the PCM. If the PCM was updated, substitute a known-good PCM (see page 14-10), then recheck. If the PCM was substituted, go to step 1. If the HDS indicates NOT COMPLETED, return to step 16 and recheck.

18. Clear the DTC with the HDS.

19. Start the engine in the P position.

20. Check for DTC(s) in the DTCs/Freeze Data in A/T Mode Menu with the HDS.

    Is DTC P0976 indicated?

    YES—Check for poor connections and loose terminals at shift solenoid valve B and the PCM, then go to step 1.

    NO—Go to step 21.

21. Monitor the OBD STATUS for P0976 in the DTCs/ Freeze Data in A/T Mode Menu for a pass/fail.

    Does the HDS indicate PASSED?

    YES—Troubleshooting is complete. If any other DTCs were indicated on step 20, go to the indicated DTC's troubleshooting. ■

    NO—If the HDS indicates FAILED, check for poor connections and loose terminals at shift solenoid valve B and the PCM, then go to step 1. If the HDS indicates NOT COMPLETED, return to step 19 and recheck.

DTC Troubleshooting (cont'd)

DTC P0977: Open in Shift Solenoid Valve B Circuit

NOTE:
- Before you troubleshoot, record all freeze data and any on-board snapshot, and review General Troubleshooting Information (see page 14-4).
- This code is caused by an electrical circuit problem and cannot be caused by a mechanical problem in the transmission.

1. Clear the DTC with the HDS.
2. Test-drive the vehicle for several minutes in 1st thru 3rd gears in the D position D3 driving mode.
3. Check that DTC P0977 recurs.

   Is DTC P0977 indicated?

   YES—Go to step 7.

   NO—Go to step 4.
4. Choose Shift Solenoid B in the Miscellaneous Test Menu, and test shift solenoid valve B with the HDS.

   Is a clicking sound heard?

   YES—Go to step 5.

   NO—Go to step 7.
5. Test-drive the vehicle for several minutes in 1st thru 3rd gears in the D position D3 driving mode.
6. Monitor the OBD STATUS for P0977 in the DTCs/ Freeze Data in A/T Mode Menu for a pass/fail.

   Does the HDS indicate FAILED?

   YES—Go to step 7.

   NO—Intermittent failure, the system is OK at this time. Check for poor connections or loose terminals at shift solenoid valve B and the PCM. If the HDS indicates NOT COMPLETED, return to step 4 and recheck.
7. Turn the ignition switch OFF.
8. Jump the SCS line with the HDS.
9. Disconnect PCM connectors B (44P) and C (44P).
10. Measure the resistance between PCM connector terminals B11 and C40.

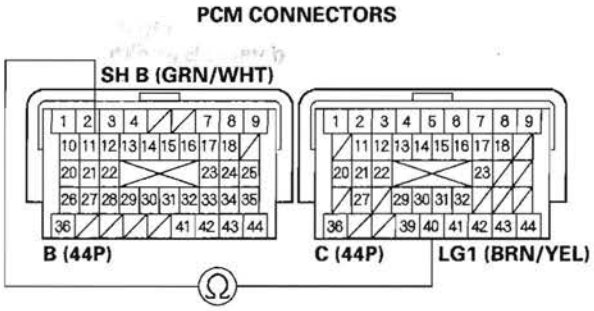

Terminal side of female terminals

Is there 12—25 Ω ?

YES—Go to step 15.

NO—Go to step 11.

11. Disconnect the shift solenoid harness connector.

12. Check for continuity between PCM connector terminal B11 and shift solenoid harness connector terminal No. 2.

SHIFT SOLENOID HARNESS CONNECTOR **PCM CONNECTOR B (44P)**

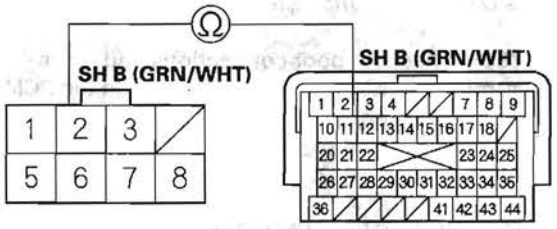

Wire side of female terminals

Terminal side of female terminals

Is there continuity?

YES—Go to step 13.

NO—Repair open in the wire between PCM connector terminal B11 and the shift solenoid harness connector, then go to step 15.

13. Remove the shift solenoid harness (see page 14-222).

14. Check for continuity between shift solenoid harness connector terminal No. 2 and the shift solenoid valve B connector terminal.

SHIFT SOLENOID VALVE B CONNECTOR **SHIFT SOLENOID HARNESS CONNECTOR**

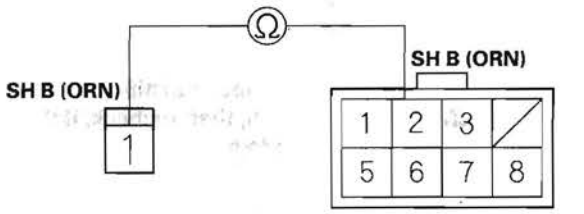

Wire side of female terminal

Terminal side of male terminals

Is there continuity?

YES—Replace shift solenoid valve B (see page 14-222), then go to step 19.

NO—Replace the shift solenoid harness (see page 14-222), then go to step 19.

(cont'd)

DTC Troubleshooting (cont'd)

15. Update the A/T software in the PCM if it does not have the latest software (see page 14-9), or substitute a known-good PCM (see page 14-10).

16. Test-drive the vehicle for several minutes in 1st thru 3rd gears in the D position D3 driving mode.

17. Check for DTC(s) in the DTCs/Freeze Data in A/T Mode Menu with the HDS.

    Is DTC P0977 indicated?

    YES—If the PCM was updated, substitute a known-good PCM (see page 14-10), then recheck. If the PCM was substituted, go to step 1.

    NO—Go to step 18.

18. Monitor the OBD STATUS for P0977 in the DTCs/ Freeze Data in A/T Mode Menu for a pass/fail.

    Does the HDS indicate PASSED?

    YES—If the PCM was updated, troubleshooting is complete. If the PCM was substituted, replace the original PCM (see page 11-219). If any other DTCs were indicated on step 17, go to the indicated DTC's troubleshooting. ■

    NO—If the HDS indicates FAILED, check for poor connections and loose terminals at shift solenoid valve B and the PCM. If the PCM was updated, substitute a known-good PCM (see page 14-10), then recheck. If the PCM was substituted, go to step 1. If the HDS indicates NOT COMPLETED, return to step 16 and recheck.

19. Clear the DTC with the HDS.

20. Test-drive the vehicle for several minutes in 1st thru 3rd gears in the D position D3 driving mode.

21. Check for DTC(s) in the DTCs/Freeze Data in A/T Mode Menu with the HDS.

    Is DTC P0977 indicated?

    YES—Check for poor connections and loose terminals at shift solenoid valve B and the PCM, then go to step 1.

    NO—Go to step 22.

22. Monitor the OBD STATUS for P0977 in the DTCs/ Freeze Data in A/T Mode Menu for a pass/fail.

    Does the HDS indicate PASSED?

    YES—Troubleshooting is complete. If any other DTCs were indicated on step 21, go to the indicated DTC's troubleshooting. ■

    NO—If the HDS indicates FAILED, check for poor connections and loose terminals at shift solenoid valve B and the PCM, then go to step 1. If the HDS indicates NOT COMPLETED, return to step 20 and recheck.

DTC P0979: Short in Shift Solenoid Valve C Circuit

NOTE:
- Before you troubleshoot, record all freeze data and any on-board snapshot, and review General Troubleshooting Information (see page 14-4).
- This code is caused by an electrical circuit problem and cannot be caused by a mechanical problem in the transmission.

1. Clear the DTC with the HDS.
2. Start the engine, and shift to the D position.
3. Check that DTC P0979 recurs.

   Is DTC P0979 indicated?

   YES—Go to step 7.

   NO—Go to step 4.
4. Choose Shift Solenoid C in the Miscellaneous Test Menu, and test shift solenoid valve C with the HDS.

   Is a clicking sound heard?

   YES—Go to step 5.

   NO—Go to step 7.
5. Start the engine, and shift to the D position.
6. Monitor the OBD STATUS for P0979 in the DTCs/ Freeze Data in A/T Mode Menu for a pass/fail.

   Does the HDS indicate FAILED?

   YES—Go to step 7.

   NO—Intermittent failure, the system is OK at this time. Check the SH C (GRN) wire for an intermittent short to ground between shift solenoid valve C and the PCM. If the HDS indicates NOT COMPLETED, return to step 4 and recheck.
7. Turn the ignition switch OFF.
8. Jump the SCS line with the HDS.
9. Disconnect PCM connectors B (44P) and C (44P).
10. Measure the resistance between PCM connector terminals B20 and C40.

PCM CONNECTORS

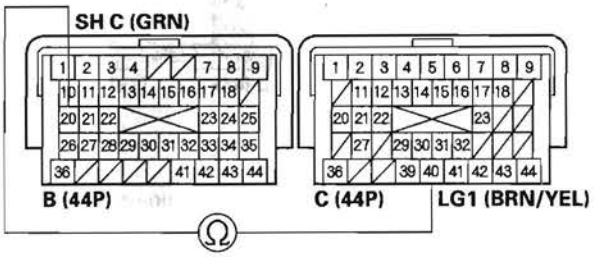

Terminal side of female terminals

Is there less than 12 Ω ?

YES—Go to step 11.

NO—Go to step 14.

(cont'd)

DTC Troubleshooting (cont'd)

11. Disconnect the shift solenoid harness connector.

12. Check for continuity between PCM connector terminals B20 and C40.

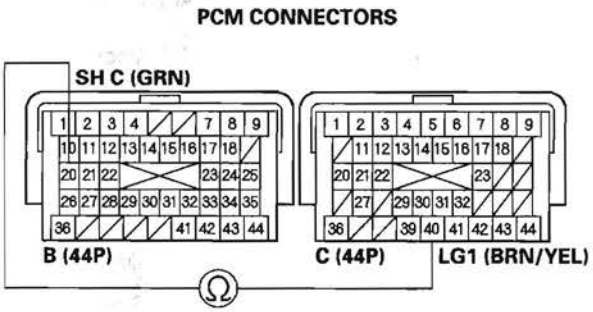

Terminal side of female terminals

Is there continuity?

YES—Repair short in the wire between PCM connector terminal B20 and the shift solenoid harness connector, then go to step 18.

NO—Go to step 13.

13. Inspect shift solenoid valve C (see page 14-218).

Is shift solenoid valve C OK?

YES—Go to step 14.

NO—Replace shift solenoid valve C or the shift solenoid harness (see page 14-222), then go to step 18.

14. Update the A/T software in the PCM if it does not have the latest software (see page 14-9), or substitute a known-good PCM (see page 14-10).

15. Start the engine, and shift to the D position.

16. Check for DTC(s) in the DTCs/Freeze Data in A/T Mode Menu with the HDS.

Is DTC P0979 indicated?

YES—If the PCM was updated, substitute a known-good PCM (see page 14-10), then recheck. If the PCM was substituted, go to step 1.

NO—Go to step 17.

17. Monitor the OBD STATUS for P0979 in the DTCs/ Freeze Data in A/T Mode Menu for a pass/fail.

Does the HDS indicate PASSED?

YES—If the PCM was updated, troubleshooting is complete. If the PCM was substituted, replace the original PCM (see page 11-219). If any other DTCs were indicated on step 16, go to the indicated DTC's troubleshooting. ■

NO—If the HDS indicates FAILED, check for poor connections and loose terminals at shift solenoid valve C and the PCM. If the PCM was updated, substitute a known-good PCM (see page 14-10), then recheck. If the PCM was substituted, go to step 1. If the HDS indicates NOT COMPLETED, return to step 15 and recheck.

18. Clear the DTC with the HDS.

19. Start the engine, and shift to the D position.

20. Check for DTC(s) in the DTCs/Freeze Data in A/T Mode Menu with the HDS.

    Is DTC P0979 indicated?

    YES—Check for poor connections and loose terminals at shift solenoid valve C and the PCM, then go to step 1.

    NO—Go to step 21.

21. Monitor the OBD STATUS for P0979 in the DTCs/ Freeze Data in A/T Mode Menu for a pass/fail.

    Does the HDS indicate PASSED?

    YES—Troubleshooting is complete. If any other DTCs were indicated on step 20, go to the indicated DTC's troubleshooting. ■

    NO—If the HDS indicates FAILED, check for poor connections and loose terminals at shift solenoid valve C and the PCM, then go to step 1. If the HDS indicates NOT COMPLETED, return to step 19 and recheck.

DTC Troubleshooting (cont'd)

DTC P0980: Open in Shift Solenoid Valve C Circuit

NOTE:
- Before you troubleshoot, record all freeze data and any on-board snapshot, and review General Troubleshooting Information (see page 14-4).
- This code is caused by an electrical circuit problem and cannot be caused by a mechanical problem in the transmission.

1. Clear the DTC with the HDS.
2. Start the engine in the P position.
3. Check that DTC P0980 recurs.

   Is DTC P0980 indicated?

   YES—Go to step 7.

   NO—Go to step 4.
4. Choose Shift Solenoid C in the Miscellaneous Test Menu, and test shift solenoid valve C with the HDS.

   Is a clicking sound heard?

   YES—Go to step 5.

   NO—Go to step 7.
5. Start the engine in the P position.
6. Monitor the OBD STATUS for P0980 in the DTCs/ Freeze Data in A/T Mode Menu for a pass/fail.

   Does the HDS indicate FAILED?

   YES—Go to step 7.

   NO—Intermittent failure, the system is OK at this time. Check for poor connections or loose terminals at shift solenoid valve C and the PCM. If the HDS indicates NOT COMPLETED, return to step 4 and recheck.
7. Turn the ignition switch OFF.
8. Jump the SCS line with the HDS.
9. Disconnect PCM connectors B (44P) and C (44P).
10. Measure the resistance between PCM connector terminals B20 and C40.

PCM CONNECTORS

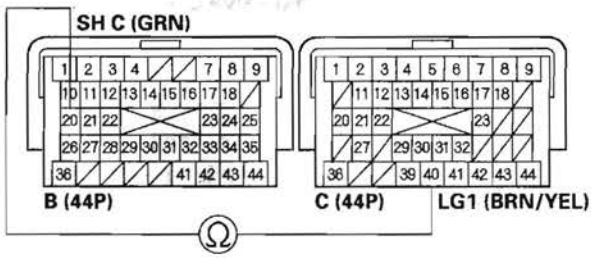

Terminal side of female terminals

Is there 12–25 Ω ?

YES—Go to step 15.

NO—Go to step 11.

11. Disconnect the shift solenoid harness connector.

12. Check for continuity between PCM connector terminal B20 and shift solenoid harness connector terminal No. 1.

SHIFT SOLENOID HARNESS CONNECTOR **PCM CONNECTOR B (44P)**

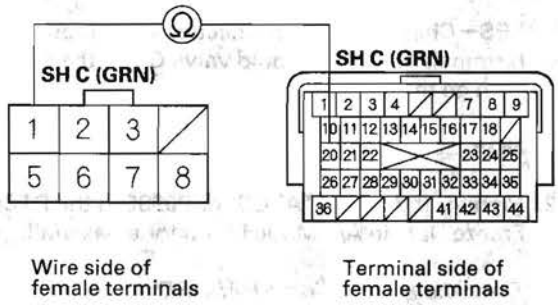

Is there continuity?

YES—Go to step 13.

NO—Repair open in the wire between PCM connector terminal B20 and the shift solenoid harness connector, then go to step 19.

13. Remove the shift solenoid harness (see page 14-222).

14. Check for continuity between shift solenoid harness connector terminal No. 1 and the shift solenoid valve C connector terminal.

SHIFT SOLENOID VALVE C CONNECTOR **SHIFT SOLENOID HARNESS CONNECTOR**

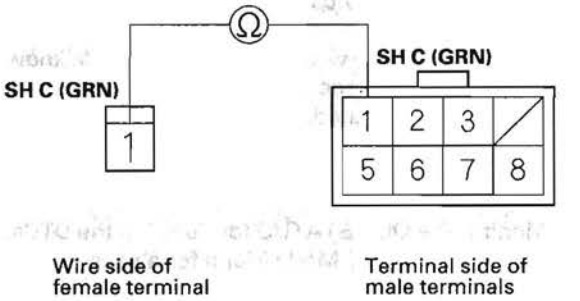

Is there continuity?

YES—Replace shift solenoid valve C (see page 14-222), then go to step 19.

NO—Replace the shift solenoid harness (see page 14-222), then go to step 19.

(cont'd)

DTC Troubleshooting (cont'd)

15. Update the A/T software in the PCM if it does not have the latest software (see page 14-9), or substitute a known-good PCM (see page 14-10).

16. Start the engine in the P position.

17. Check for DTC(s) in the DTCs/Freeze Data in A/T Mode Menu with the HDS.

    Is DTC P0980 indicated?

    YES—If the PCM was updated, substitute a known-good PCM (see page 14-10), then recheck. If the PCM was substituted, go to step 1.

    NO—Go to step 18.

18. Monitor the OBD STATUS for P0980 in the DTCs/ Freeze Data in A/T Mode Menu for a pass/fail.

    Does the HDS indicate PASSED?

    YES—If the PCM was updated, troubleshooting is complete. If the PCM was substituted, replace the original PCM (see page 11-219). If any other DTCs were indicated on step 17, go to the indicated DTC's troubleshooting. ■

    NO—If the HDS indicates FAILED, check for poor connections and loose terminals at shift solenoid valve C and the PCM. If the PCM was updated, substitute a known-good PCM (see page 14-10), then recheck. If the PCM was substituted, go to step 1. If the HDS indicates NOT COMPLETED, return to step 16 and recheck.

19. Clear the DTC with the HDS.

20. Start the engine in the P position.

21. Check for DTC(s) in the DTCs/Freeze Data in A/T Mode Menu with the HDS.

    Is DTC P0980 indicated?

    YES—Check for poor connections and loose terminals at shift solenoid valve C and the PCM, then go to step 1.

    NO—Go to step 22.

22. Monitor the OBD STATUS for P0980 in the DTCs/ Freeze Data in A/T Mode Menu for a pass/fail.

    Does the HDS indicate PASSED?

    YES—Troubleshooting is complete. If any other DTCs were indicated on step 21, go to the indicated DTC's troubleshooting. ■

    NO—If the HDS indicates FAILED, check for poor connections and loose terminals at shift solenoid valve C and the PCM, then go to step 1. If the HDS indicates NOT COMPLETED, return to step 20 and recheck.

DTC P0982: Short in Shift Solenoid Valve D Circuit

NOTE:
- Before you troubleshoot, record all freeze data and any on-board snapshot, and review General Troubleshooting Information (see page 14-4).
- This code is caused by an electrical circuit problem and cannot be caused by a mechanical problem in the transmission.

1. Clear the DTC with the HDS.
2. Test-drive the vehicle for several minutes in 1st and 2nd gears in the D position.
3. Check that DTC P0982 recurs.

   Is DTC P0982 indicated?

   YES—Go to step 7.

   NO—Go to step 4.
4. Choose Shift Solenoid D in the Miscellaneous Test Menu, and test shift solenoid valve D with the HDS.

   Is a clicking sound heard?

   YES—Go to step 5.

   NO—Go to step 7.
5. Test-drive the vehicle for several minutes in 1st and 2nd gears in the D position.
6. Monitor the OBD STATUS for P0982 in the DTCs/ Freeze Data in A/T Mode Menu for a pass/fail.

   Does the HDS indicate FAILED?

   YES—Go to step 7.

   NO—Intermittent failure, the system is OK at this time. Check the SH D wire for an intermittent short to ground between shift solenoid valve D and the PCM. If the HDS indicates NOT COMPLETED, return to step 4 and recheck.
7. Turn the ignition switch OFF.
8. Jump the SCS line with the HDS.
9. Disconnect PCM connectors B (44P) and C (44P).
10. Measure the resistance between PCM connector terminals B26 and C40.

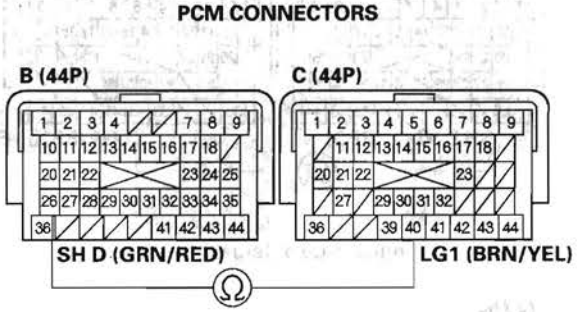

Terminal side of female terminals

Is there less than 12 Ω ?

YES—Go to step 11.

NO—Go to step 14.

(cont'd)

DTC Troubleshooting (cont'd)

11. Disconnect the shift solenoid harness connector.

12. Check for continuity between PCM connector terminals B26 and C40.

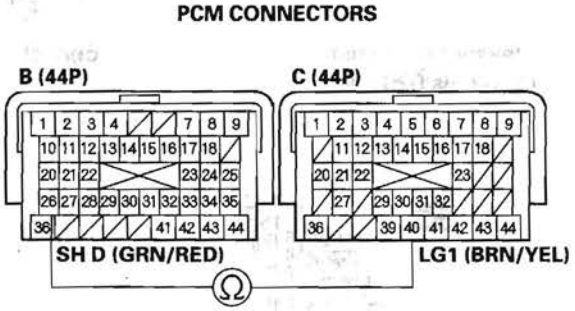

Terminal side of female terminals

Is there continuity?

YES—Repair short in the wire between PCM connector terminal B26 and the shift solenoid harness connector, then go to step 18.

NO—Go to step 13.

13. Inspect shift solenoid valve D (see page 14-218).

Is shift solenoid valve D OK?

YES—Go to step 14.

NO—Replace shift solenoid valve D or the shift solenoid harness (see page 14-222), then go to step 18.

14. Update the A/T software in the PCM if it does not have the latest software (see page 14-9), or substitute a known-good PCM (see page 14-10).

15. Test-drive the vehicle for several minutes in 1st and 2nd gears in the D position.

16. Check for DTC(s) in the DTCs/Freeze Data in A/T Mode Menu with the HDS.

Is DTC P0982 indicated?

YES—If the PCM was updated, substitute a known-good PCM (see page 14-10), then recheck. If the PCM was substituted, go to step 1.

NO—Go to step 17.

17. Monitor the OBD STATUS for P0982 in the DTCs/ Freeze Data in A/T Mode Menu for a pass/fail.

Does the HDS indicate PASSED?

YES—If the PCM was updated, troubleshooting is complete. If the PCM was substituted, replace the original PCM (see page 11-219). If any other DTCs were indicated on step 16, go to the indicated DTC's troubleshooting. ■

NO—If the HDS indicates FAILED, check for poor connections and loose terminals at shift solenoid valve D and the PCM. If the PCM was updated, substitute a known-good PCM (see page 14-10), then recheck. If the PCM was substituted, go to step 1. If the HDS indicates NOT COMPLETED, return to step 15 and recheck.

18. Clear the DTC with the HDS.

19. Test-drive the vehicle for several minutes in 1st and 2nd gears in the D position.

20. Check for DTC(s) in the DTCs/Freeze Data in A/T Mode Menu with the HDS.

    Is DTC P0982 indicated?

    YES—Check for poor connections and loose terminals at shift solenoid valve D and the PCM, then go to step 1.

    NO—Go to step 21.

21. Monitor the OBD STATUS for P0982 in the DTCs/ Freeze Data in A/T Mode Menu for a pass/fail.

    Does the HDS indicate PASSED?

    YES—Troubleshooting is complete. If any other DTCs were indicated on step 20, go to the indicated DTC's troubleshooting. ■

    NO—If the HDS indicates FAILED, check for poor connections and loose terminals at shift solenoid valve D and the PCM, then go to step 1. If the HDS indicates NOT COMPLETED, return to step 19 and recheck.

DTC Troubleshooting (cont'd)

DTC P0983: Open in Shift Solenoid Valve D Circuit

NOTE:
- Before you troubleshoot, record all freeze data and any on-board snapshot, and review General Troubleshooting Information (see page 14-4).
- This code is caused by an electrical circuit problem and cannot be caused by a mechanical problem in the transmission.

1. Clear the DTC with the HDS.
2. Start the engine in the P position.
3. Check that DTC P0983 recurs.

   Is DTC P0983 indicated?

   YES—Go to step 7.

   NO—Go to step 4.
4. Choose Shift Solenoid D in the Miscellaneous Test Menu, and test shift solenoid valve D with the HDS.

   Is a clicking sound heard?

   YES—Go to step 5.

   NO—Go to step 7.
5. Start the engine in the P position.
6. Monitor the OBD STATUS for P0983 in the DTCs/ Freeze Data in A/T Mode Menu for a pass/fail.

   Does the HDS indicate FAILED?

   YES—Go to step 7.

   NO—Intermittent failure, the system is OK at this time. Check for poor connections or loose terminals at shift solenoid valve D and the PCM. If the HDS indicates NOT COMPLETED, return to step 4 and recheck.
7. Turn the ignition switch OFF.
8. Jump the SCS line with the HDS.
9. Disconnect PCM connectors B (44P) and C (44P).
10. Measure the resistance between PCM connector terminals B26 and C40.

PCM CONNECTORS

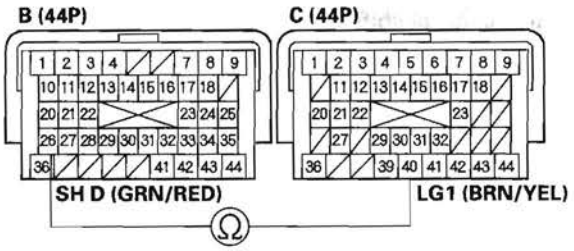

Terminal side of female terminals

Is there 12—25 Ω ?

YES—Go to step 15.

NO—Go to step 11.

11. Disconnect the shift solenoid harness connector.

12. Check for continuity between PCM connector terminal B26 and shift solenoid harness connector terminal No. 8.

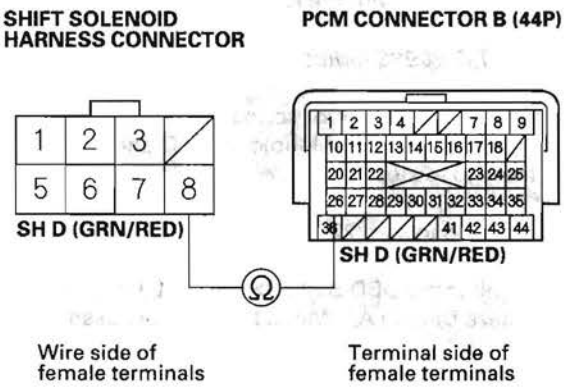

Is there continuity?

YES—Go to step 13.

NO—Repair open in the wire between PCM connector terminal B26 and the shift solenoid harness connector, then go to step 19.

13. Remove the shift solenoid harness (see page 14-222).

14. Check for continuity between shift solenoid harness connector terminal No. 8 and the shift solenoid valve D connector terminal.

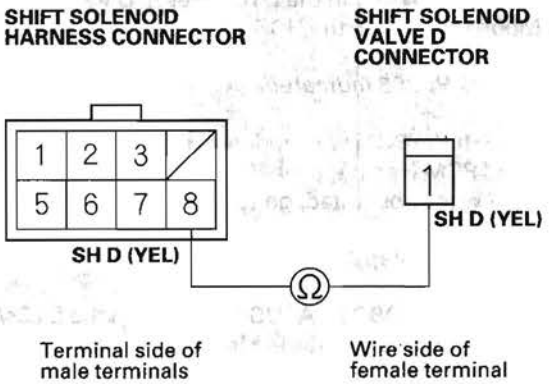

Is there continuity?

YES—Replace shift solenoid valve D (see page 14-222), then go to step 19.

NO—Replace the shift solenoid harness (see page 14-222), then go to step 19.

(cont'd)

DTC Troubleshooting (cont'd)

15. Update the A/T software in the PCM if it does not have the latest software (see page 14-9), or substitute a known-good PCM (see page 14-10).

16. Start the engine in the P position.

17. Check for DTC(s) in the DTCs/Freeze Data in A/T Mode Menu with the HDS.

    Is DTC P0983 indicated?

    YES—If the PCM was updated, substitute a known-good PCM (see page 14-10), then recheck. If the PCM was substituted, go to step 1.

    NO—Go to step 18.

18. Monitor the OBD STATUS for P0983 in the DTCs/ Freeze Data in A/T Mode Menu for a pass/fail.

    Does the HDS indicate PASSED?

    YES—If the PCM was updated, troubleshooting is complete. If the PCM was substituted, replace the original PCM (see page 11-219). If any other DTCs were indicated on step 17, go to the indicated DTC's troubleshooting. ■

    NO—If the HDS indicates FAILED, check for poor connections and loose terminals at shift solenoid valve D and the PCM. If the PCM was updated, substitute a known-good PCM (see page 14-10), then recheck. If the PCM was substituted, go to step 1. If the HDS indicates NOT COMPLETED, return to step 16 and recheck.

19. Clear the DTC with the HDS.

20. Start the engine in the P position.

21. Check for DTC(s) in the DTCs/Freeze Data in A/T Mode Menu with the HDS.

    Is DTC P0983 indicated?

    YES—Check for poor connections and loose terminals at shift solenoid valve D and the PCM, then go to step 1.

    NO—Go to step 22.

22. Monitor the OBD STATUS for P0983 in the DTCs/ Freeze Data in A/T Mode Menu for a pass/fail.

    Does the HDS indicate PASSED?

    YES—Troubleshooting is complete. If any other DTCs were indicated on step 21, go to the indicated DTC's troubleshooting. ■

    NO—If the HDS indicates FAILED, check for poor connections and loose terminals at shift solenoid valve D and the PCM, then go to step 1. If the HDS indicates NOT COMPLETED, return to step 20 and recheck.

DTC P0985: Short in Shift Solenoid Valve E Circuit

NOTE:
- Before you troubleshoot, record all freeze data and any on-board snapshot, and review General Troubleshooting Information (see page 14-4).
- This code is caused by an electrical circuit problem and cannot be caused by a mechanical problem in the transmission.

1. Clear the DTC with the HDS.
2. Start the engine in the P position.
3. Check that DTC P0985 recurs.

   Is DTC P0985 indicated?

   YES—Go to step 7.

   NO—Go to step 4.
4. Choose Shift Solenoid E in the Miscellaneous Test Menu, and test shift solenoid valve E with the HDS.

   Is a clicking sound heard?

   YES—Go to step 5.

   NO—Go to step 7.
5. Start the engine in the P position.
6. Monitor the OBD STATUS for P0985 in the DTCs/ Freeze Data in A/T Mode Menu for a pass/fail.

   Does the HDS indicate FAILED?

   YES—Go to step 7.

   NO—Intermittent failure, the system is OK at this time. Check the SH E (YEL) wire for an intermittent short to ground between shift solenoid valve E and the PCM. If the HDS indicates NOT COMPLETED, return to step 4 and recheck.
7. Turn the ignition switch OFF.
8. Jump the SCS line with the HDS.
9. Disconnect PCM connectors B (44P) and C (44P).
10. Measure the resistance between PCM connector terminals B24 and C40.

PCM CONNECTORS

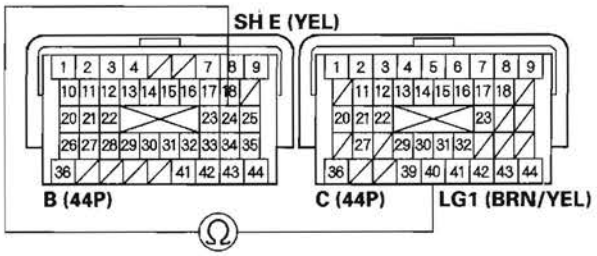

Terminal side of female terminals

Is there less than 12 Ω ?

YES—Go to step 11.

NO—Go to step 14.

(cont'd)

DTC Troubleshooting (cont'd)

11. Disconnect the shift solenoid harness connector.

12. Check for continuity between PCM connector terminals B24 and C40.

PCM CONNECTORS

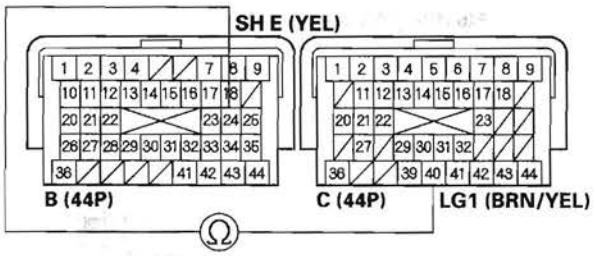

Terminal side of female terminals

Is there continuity?

YES—Repair short in the wire between PCM connector terminal B24 and the shift solenoid harness connector, then go to step 18.

NO—Go to step 13.

13. Inspect shift solenoid valve E (see page 14-218).

Is shift solenoid valve E OK?

YES—Go to step 14.

NO—Replace shift solenoid valve E or the shift solenoid harness (see page 14-222), then go to step 18.

14. Update the A/T software in the PCM if it does not have the latest software (see page 14-9), or substitute a known-good PCM (see page 14-10).

15. Start the engine in the P position.

16. Check for DTC(s) in the DTCs/Freeze Data in A/T Mode Menu with the HDS.

Is DTC P0985 indicated?

YES—If the PCM was updated, substitute a known-good PCM (see page 14-10), then recheck. If the PCM was substituted, go to step 1.

NO—Go to step 17.

17. Monitor the OBD STATUS for P0985 in the DTCs/ Freeze Data in A/T Mode Menu for a pass/fail.

Does the HDS indicate PASSED?

YES—If the PCM was updated, troubleshooting is complete. If the PCM was substituted, replace the original PCM (see page 11-219). If any other DTCs were indicated on step 16, go to the indicated DTC's troubleshooting.■

NO—If the HDS indicates FAILED, check for poor connections and loose terminals at shift solenoid valve E and the PCM. If the PCM was updated, substitute a known-good PCM (see page 14-10), then recheck. If the PCM was substituted, go to step 1. If the HDS indicates NOT COMPLETED, keep idling until a result comes on.

18. Clear the DTC with the HDS.

19. Start the engine in the P position.

20. Check for DTC(s) in the DTCs/Freeze Data in A/T Mode Menu with the HDS.

    Is DTC P0985 indicated?

    YES—Check for poor connections and loose terminals at shift solenoid valve E and the PCM, then go to step 1.

    NO—Go to step 21.

21. Monitor the OBD STATUS for P0985 in the DTCs/ Freeze Data in A/T Mode Menu for a pass/fail.

    Does the HDS indicate PASSED?

    YES—Troubleshooting is complete. If any other DTCs were indicated on step 20, go to the indicated DTC's troubleshooting. ■

    NO—If the HDS indicates FAILED, check for poor connections and loose terminals at shift solenoid valve E and the PCM, then go to step 1. If the HDS indicates NOT COMPLETED, return to step 19 and recheck.

DTC Troubleshooting (cont'd)

DTC P0986: Open in Shift Solenoid Valve E Circuit

NOTE:
- Before you troubleshoot, record all freeze data and any on-board snapshot, and review General Troubleshooting Information (see page 14-4).
- This code is caused by an electrical circuit problem and cannot be caused by a mechanical problem in the transmission.

1. Clear the DTC with the HDS.
2. Test-drive the vehicle for several minutes in 1st and 2nd gears in the D position.
3. Check that DTC P0986 recurs.

   Is DTC P0986 indicated?

   YES—Go to step 7.

   NO—Go to step 4.
4. Choose Shift Solenoid E in the Miscellaneous Test Menu, and test shift solenoid valve E with the HDS.

   Is a clicking sound heard?

   YES—Go to step 5.

   NO—Go to step 7.
5. Test-drive the vehicle for several minutes in 1st and 2nd gears in the D position.
6. Monitor the OBD STATUS for P0986 in the DTCs/ Freeze Data in A/T Mode Menu for a pass/fail.

   Does the HDS indicate FAILED?

   YES—Go to step 7.

   NO—Intermittent failure, the system is OK at this time. Check for poor connections or loose terminals at shift solenoid valve E and the PCM. If the HDS indicates NOT COMPLETED, return to step 4 and recheck.
7. Turn the ignition switch OFF.
8. Jump the SCS line with the HDS.
9. Disconnect PCM connectors B (44P) and C (44P).
10. Measure the resistance between PCM connector terminals B24 and C40.

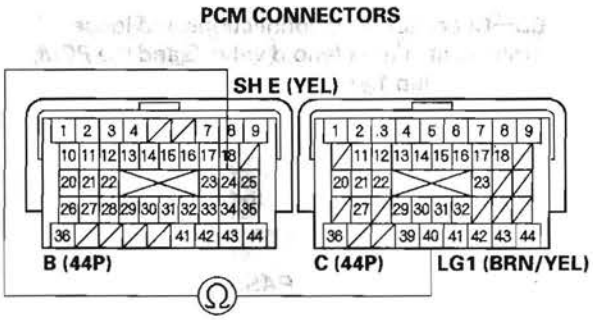

Terminal side of female terminals

Is there 12—25 Ω ?

YES—Go to step 15.

NO—Go to step 11.

11. Disconnect the shift solenoid harness connector.

12. Check for continuity between PCM connector terminal B24 and shift solenoid harness connector terminal No. 3.

PCM CONNECTOR B (44P) **SHIFT SOLENOID HARNESS CONNECTOR**

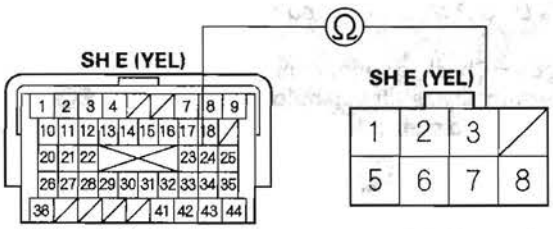

Terminal side of female terminals

Wire side of female terminals

Is there continuity?

YES—Go to step 13.

NO—Repair open in the wire between PCM connector terminal B24 and the shift solenoid harness connector, then go to step 19.

13. Remove the shift solenoid harness (see page 14-222).

14. Check for continuity between shift solenoid harness connector terminal No. 3 and the shift solenoid valve E connector terminal.

SHIFT SOLENOID HARNESS CONNECTOR **SHIFT SOLENOID VALVE E CONNECTOR**

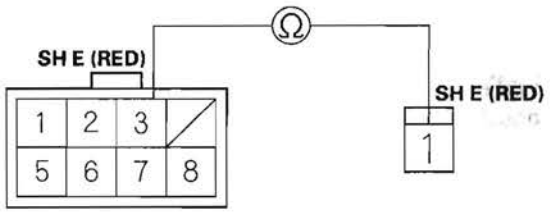

Terminal side of male terminals

Wire side of female terminal

Is there continuity?

YES—Replace shift solenoid valve E (see page 14-222), then go to step 19.

NO—Replace the shift solenoid harness (see page 14-222), then go to step 19.

(cont'd)

DTC Troubleshooting (cont'd)

15. Update the A/T software in the PCM if it does not have the latest software (see page 14-9), or substitute a known-good PCM (see page 14-10).

16. Test-drive the vehicle for several minutes in 1st and 2nd gears in the D position.

17. Check for DTC(s) in the DTCs/Freeze Data in A/T Mode Menu with the HDS.

    Is DTC P0986 indicated?

    YES—If the PCM was updated, substitute a known-good PCM (see page 14-10), then recheck. If the PCM was substituted, go to step 1.

    NO—Go to step 18.

18. Monitor the OBD STATUS for P0986 in the DTCs/ Freeze Data in A/T Mode Menu for a pass/fail.

    Does the HDS indicate PASSED?

    YES—If the PCM was updated, troubleshooting is complete. If the PCM was substituted, replace the original PCM (see page 11-219). If any other DTCs were indicated on step 17, go to the indicated DTC's troubleshooting.■

    NO—If the HDS indicates FAILED, check for poor connections and loose terminals at shift solenoid valve E and the PCM. If the PCM was updated, substitute a known-good PCM (see page 14-10), then recheck. If the PCM was substituted, go to step 1. If the HDS indicates NOT COMPLETED, return to step 16 and recheck.

19. Clear the DTC with the HDS.

20. Test-drive the vehicle for several minutes in 1st and 2nd gears in the D position.

21. Check for DTC(s) in the DTCs/Freeze Data in A/T Mode Menu with the HDS.

    Is DTC P0986 indicated?

    YES—Check for poor connections and loose terminals at shift solenoid valve E and the PCM, then go to step 1.

    NO—Go to step 22.

22. Monitor the OBD STATUS for P0986 in the DTCs/ Freeze Data in A/T Mode Menu for a pass/fail.

    Does the HDS indicate PASSED?

    YES—Troubleshooting is complete. If any other DTCs were indicated on step 21, go to the indicated DTC's troubleshooting.■

    NO—If the HDS indicates FAILED, check for poor connections and loose terminals at shift solenoid valve E and the PCM, then go to step 1. If the HDS indicates NOT COMPLETED, return to step 20 and recheck.

DTC P16C0: PCM A/T Control System Incomplete Update

NOTE:
- Before you troubleshoot, record all freeze data and any on-board snapshot, and review General Troubleshooting Information (see page 14-4).
- This code is indicated when PCM updating is incomplete.

1. Update the A/T software in the PCM (see page 14-9).

2. Check whether the DTC P16C0 is indicated in the DTCs/Freeze Data in A/T Mode Menu with the HDS.

   Is DTC P16C0 indicated?

   YES—Replace the original PCM (see page 11-219). ■

   NO—PCM updating is complete. ■

DTC Troubleshooting (cont'd)

DTC P1717: Open in Transmission Range Switch ATP RVS Switch Circuit

NOTE:
- Before you troubleshoot, record all freeze data and any on-board snapshot, and review General Troubleshooting Information (see page 14-4).
- This code is caused by an electrical circuit problem and cannot be caused by a mechanical problem in the transmission.

1. Turn the ignition switch ON (II).
2. Shift to the R position, and check the A/T R SWITCH signal with the HDS in the A/T data list.

   Is the A/T R SWITCH ON?

   YES—Go to step 3.

   NO—Check for proper transmission range switch installation (see page 14-292), adjust the shift cable (see page 14-286), then recheck. ■
3. Check the REVERSE SWITCH signal with the HDS.

   Is the REVERSE SWITCH ON?

   YES—Intermittent failure, the system is OK at this time. ■

   NO—Go to step 4.
4. Turn the ignition switch OFF.
5. Disconnect the transmission range switch connector.
6. Check for continuity between transmission range switch connector terminal No. 10 and body ground.

TRANSMISSION RANGE SWITCH CONNECTOR

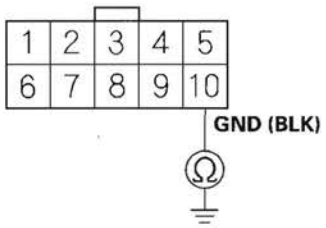

Wire side of female terminals

Is there continuity?

YES—Go to step 7.

NO—Repair open in the wire between transmission range switch connector terminal No. 5 and ground (G101), or repair poor ground (G101), then go to step 14.

7. Turn the ignition switch ON (II).

8. Measure the voltage between transmission range switch connector terminals No. 1 and No. 10.

TRANSMISSION RANGE SWITCH CONNECTOR

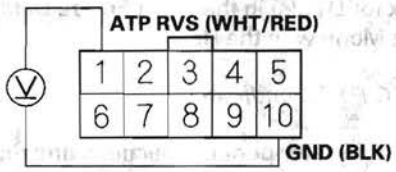

Wire side of female terminals

Is there voltage?

YES—Go to step 9.

NO—Repair open in the wire between PCM connector terminal B22 and the transmission range switch, then go to step 14.

9. Check for continuity between the No. 1 and No. 10 terminals at the transmission range switch.

TRANSMISSION RANGE SWITCH CONNECTOR

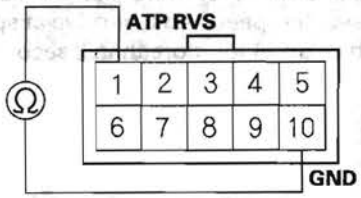

Terminal side of male terminals

Is there continuity while the shift lever is in the R position, and no continuity when the shift lever is shifted to any position other than R?

YES—Check for poor connections and loose terminals at the transmission range switch and the PCM. If the connections are OK, go to step 10.

NO—Replace the transmission range switch (see page 14-294), then go to step 14.

(cont'd)

DTC Troubleshooting (cont'd)

10. Update the A/T software in the PCM if it does not have the latest software (see page 14-9), or substitute a known-good PCM (see page 14-10).

11. Test-drive the vehicle in the R position at speeds below 3 mph (5 km/h) for more than 2 seconds, then increase the speed and test-drive at speeds over 3 mph (5 km/h) for more than 2 seconds, then slow down to a stop.

12. Check for DTC(s) in the DTCs/Freeze Data in A/T Mode Menu with the HDS.

    Is DTC P1717 indicated?

    YES—If the PCM was updated, substitute a known-good PCM (see page 14-10), then recheck. If the PCM was substituted, go to step 1.

    NO—Go to step 13.

13. Monitor the OBD STATUS for P1717 in the DTCs/ Freeze Data in A/T Mode Menu for a pass/fail.

    Does the HDS indicate PASSED?

    YES—If the PCM was updated, troubleshooting is complete. If the PCM was substituted, replace the original PCM (see page 11-219). If any other DTCs were indicated on step 12, go to the indicated DTC's troubleshooting. ■

    NO—If the HDS indicates FAILED, check for poor connections and loose terminals at the transmission range switch and the PCM. If the PCM was updated, substitute a known-good PCM (see page 14-10), then recheck. If the PCM was substituted, go to step 1. If the HDS indicates NOT COMPLETED, return to step 11 and recheck.

14. Clear the DTC with the HDS.

15. Test-drive the vehicle in the R position at speeds below 3 mph (5 km/h) for more than 2 seconds, then increase the speed and test-drive at speeds over 3 mph (5 km/h) for more than 2 seconds, then slow down to a stop.

16. Check for DTC(s) in the DTCs/Freeze Data in A/T Mode Menu with the HDS.

    Is DTC P1717 indicated?

    YES—Check for poor connections and loose terminals at the transmission range switch and the PCM, then go to step 1.

    NO—Go to step 17.

17. Monitor the OBD STATUS for P1717 in the DTCs/ Freeze Data in A/T Mode Menu for a pass/fail.

    Does the HDS indicate PASSED?

    YES—Troubleshooting is complete. If any other DTCs were indicated on step 16, go to the indicated DTC's troubleshooting. ■

    NO—If the HDS indicates FAILED, check for poor connections and loose terminals at the transmission range switch and the PCM, then go to step 1. If the HDS indicates NOT COMPLETED, return to step 15 and recheck.

DTC P1730: Problem in Shift Control System:

- Shift Solenoid Valves A or D Stuck OFF
- Shift Solenoid Valve B Stuck ON
- Shift Valves A, B, or D Stuck

NOTE: Before you troubleshoot, record all freeze data and any on-board snapshot, and review General Troubleshooting Information (see page 14-4).

1. Warm up the engine to normal operating temperature (the radiator fan comes on).

2. Make sure that the transmission is filled to the proper level, and check for fluid leaks.

3. Drain the ATF (see step 3 on page 14-239) through a strainer. Inspect the strainer for metal debris or excessive clutch material.

   Does the strainer have metal debris or excessive clutch material?

   YES—Replace the transmission, then go to step 15.

   NO—Replace the ATF (see step 5 on page 14-239), then go to step 4.

4. Clear the DTC with the HDS.

5. Test-drive the vehicle in the D position through all five gears at speeds over 12 mph (20 km/h) for more than 20 seconds, then slow down to a stop.

6. Test-drive the vehicle again in the D position through all five gears at speeds over 12 mph (20 km/h) for more than 20 seconds, then slow down to a stop.

7. Monitor the OBD STATUS for P1730 in the DTCs/ Freeze Data in A/T Mode Menu for a pass/fail.

   Does the HDS indicate FAILED?

   YES—Go to step 8.

   NO—Intermittent failure, the system is OK at this time. If the HDS indicates NOT COMPLETED, return to step 5 and recheck.

8. Clear the DTC with the HDS.

9. Choose Shift Solenoid A in the Miscellaneous Test Menu, and check that shift solenoid valve A operates with the HDS.

   Is a clicking sound heard?

   YES—Go to step 10.

   NO—Replace shift solenoid valve A (see page 14-222), then go to step 15.

10. Choose Shift Solenoid B in the Miscellaneous Test Menu, and check that shift solenoid valve B operates with the HDS.

    Is a clicking sound heard?

    YES—Go to step 11.

    NO—Replace shift solenoid valve B (see page 14-222), then go to step 15.

11. Choose Shift Solenoid D in the Miscellaneous Test Menu, and check that shift solenoid valve D operates with the HDS.

    Is a clicking sound heard?

    YES—Go to step 12.

    NO—Replace shift solenoid valve D (see page 14-222), then go to step 15.

(cont'd)

DTC Troubleshooting (cont'd)

12. Test-drive the vehicle in the D position through all five gears at speeds over 12 mph (20 km/h) for more than 20 seconds, then slow down to a stop.

13. Test-drive the vehicle again in the D position through all five gears at speeds over 12 mph (20 km/h) for more than 20 seconds, then slow down to a stop.

14. Monitor the OBD STATUS for P1730 in the DTCs/ Freeze Data in A/T Mode Menu for a pass/fail.

    Does the HDS indicate FAILED?

    YES—Repair hydraulic system related with shift valves A, B, and D, or replace the transmission, then go to step 15.

    NO—Intermittent failure, the system is OK at this time. If the HDS indicates NOT COMPLETED, return to step 12 and recheck.

15. Clear the DTC with the HDS.

16. Test-drive the vehicle in the D position through all five gears at speeds over 12 mph (20 km/h) for more than 20 seconds, then slow down to a stop.

17. Test-drive the vehicle again in the D position through all five gears at speeds over 12 mph (20 km/h) for more than 20 seconds, then slow down to a stop.

18. Monitor the OBD STATUS for P1730 in the DTCs/ Freeze Data in A/T Mode Menu for a pass/fail.

    Does the HDS indicate PASSED?

    YES—Troubleshooting is complete. ■

    NO—If the HDS indicates FAILED, return to step 15 and recheck. If the HDS indicates NOT COMPLETED, return to step 16 and recheck.

DTC P1731: Problem in Shift Control System:

- Shift Solenoid Valve E Stuck OFF
- Shift Valve E Stuck
- A/T Clutch Pressure Control Solenoid Valve A Stuck OFF

NOTE: Before you troubleshoot, record all freeze data and any on-board snapshot, and review General Troubleshooting Information (see page 14-4).

1. Warm up the engine to normal operating temperature (the radiator fan comes on).

2. Make sure that the transmission is filled to the proper level, and check for fluid leaks.

3. Drain the ATF (see step 3 on page 14-239) through a strainer. Inspect the strainer for metal debris or excessive clutch material.

   Does the strainer have metal debris or excessive clutch material?

   YES—Replace the transmission, then go to step 12.

   NO—Replace the ATF (see step 5 on page 14-239), then go to step 4.

4. Clear the DTC with the HDS.

5. Test-drive the vehicle in the D position through all five gears at speeds over 12 mph (20 km/h) for more than 20 seconds, then slow down to a stop.

6. Test-drive the vehicle again in the D position through all five gears at speeds over 12 mph (20 km/h) for more than 20 seconds, then slow down to a stop.

7. Monitor the OBD STATUS for P1731 in the DTCs/ Freeze Data in A/T Mode Menu for a pass/fail.

   Does the HDS indicate FAILED?

   YES—Go to step 8.

   NO—Intermittent failure, the system is OK at this time. If the HDS indicates NOT COMPLETED, return to step 5 and recheck.

8. Clear the DTC with the HDS.

9. Choose Shift Solenoid E in the Miscellaneous Test Menu, and check that shift solenoid valve E operates with the HDS.

   Is a clicking sound heard?

   YES—Go to step 10.

   NO—Replace shift solenoid valve E (see page 14-222), then go to step 15.

10. Choose Clutch Pressure Control (Linear) Solenoid A in the Miscellaneous Test Menu, and test A/T clutch pressure control solenoid valve A with the HDS.

    Does the HDS indicate NORMAL?

    YES—Intermittent failure, the system is OK at this time.■

    NO—Follow the instructions indicated on the HDS by the test result, but if the HDS has not determined the cause of the failure, go to step 11. If any part is replaced, go to step 12.

11. Inspect A/T clutch pressure control solenoid valve A (see page 14-225).

    Does A/T clutch pressure control solenoid valve A work properly?

    YES—Repair the hydraulic system related with shift valve E, or replace the transmission, then go to step 12.

    NO—Replace A/T clutch pressure control solenoid valve A (see page 14-227), then go to step 12.

(cont'd)

DTC Troubleshooting (cont'd)

12. Clear the DTC with the HDS.
13. Test-drive the vehicle in the D position through all five gears at speeds over 12 mph (20 km/h) for more than 20 seconds, then slow down to a stop.
14. Test-drive the vehicle again in the D position through all five gears at speeds over 12 mph (20 km/h) for more than 20 seconds, then slow down to a stop.
15. Monitor the OBD STATUS for P1731 in the DTCs/ Freeze Data in A/T Mode Menu for a pass/fail.

    Does the HDS indicate PASSED?

    YES—Troubleshooting is complete.■

    NO—If the HDS indicates FAILED, return to step 12 and recheck. If the HDS indicates NOT COMPLETED, return to step 13 and recheck.

DTC P1732: Problem in Shift Control System:

- Shift Solenoid Valves B or C Stuck ON
- Shift Valves B or C Stuck

NOTE: Before you troubleshoot, record all freeze data and any on-board snapshot, and review General Troubleshooting Information (see page 14-4).

1. Warm up the engine to normal operating temperature (the radiator fan comes on).

2. Make sure that the transmission is filled to the proper level, and check for fluid leaks.

3. Drain the ATF (see step 3 on page 14-239) through a strainer. Inspect the strainer for metal debris or excessive clutch material.

   Does the strainer have metal debris or excessive clutch material?

   YES—Replace the transmission, then go to step 14.

   NO—Replace the ATF (see step 5 on page 14-239), then go to step 4.

4. Clear the DTC with the HDS.

5. Test-drive the vehicle in the D position through all five gears at speeds over 12 mph (20 km/h) for more than 20 seconds, then slow down to a stop.

6. Test-drive the vehicle again in the D position through all five gears at speeds over 12 mph (20 km/h) for more than 20 seconds, then slow down to a stop.

7. Monitor the OBD STATUS for P1732 in the DTCs/ Freeze Data in A/T Mode Menu for a pass/fail.

   Does the HDS indicate FAILED?

   YES—Go to step 8.

   NO—Intermittent failure, the system is OK at this time. If the HDS indicates NOT COMPLETED, return to step 5 and recheck.

8. Clear the DTC with the HDS.

9. Choose Shift Solenoid B in the Miscellaneous Test Menu, and check that shift solenoid valve B operates with the HDS.

   Is a clicking sound heard?

   YES—Go to step 10.

   NO—Replace shift solenoid valve B (see page 14-222), then go to step 14.

10. Choose Shift Solenoid C in the Miscellaneous Test Menu, and check that shift solenoid valve C operates with the HDS.

    Is a clicking sound heard?

    YES—Go to step 11.

    NO—Replace shift solenoid valve C (see page 14-222), then go to step 14.

11. Test-drive the vehicle in the D position through all five gears at speeds over 12 mph (20 km/h) for more than 20 seconds, then slow down to a stop.

12. Test-drive the vehicle again in the D position through all five gears at speeds over 12 mph (20 km/h) for more than 20 seconds, then slow down to a stop.

13. Monitor the OBD STATUS for P1732 in the DTCs/ Freeze Data in A/T Mode Menu for a pass/fail.

    Does the HDS indicate FAILED?

    YES—Repair hydraulic system related with shift valves B and C, or replace the transmission, then go to step 14.

    NO—Intermittent failure, the system is OK at this time. If the HDS indicates NOT COMPLETED, return to step 12 and recheck.

(cont'd)

DTC Troubleshooting (cont'd)

14. Clear the DTC with the HDS.

15. Test-drive the vehicle in the D position through all five gears at speeds over 12 mph (20 km/h) for more than 20 seconds, then slow down to a stop.

16. Test-drive the vehicle again in the D position through all five gears at speeds over 12 mph (20 km/h) for more than 20 seconds, then slow down to a stop.

17. Monitor the OBD STATUS for P1732 in the DTCs/ Freeze Data in A/T Mode Menu for a pass/fail.

    Does the HDS indicate PASSED?

    YES—Troubleshooting is complete. ■

    NO—If the HDS indicates FAILED, return to step 14 and recheck. If the HDS indicates NOT COMPLETED, return to step 15 and recheck.

DTC P1733: Problem in Shift Control System:

- Shift Solenoid Valve D Stuck ON
- Shift Valve D Stuck
- A/T Clutch Pressure Control Solenoid Valve C Stuck OFF

NOTE: Before you troubleshoot, record all freeze data and any on-board snapshot, and review General Troubleshooting Information (see page 14-4).

1. Warm up the engine to normal operating temperature (the radiator fan comes on).

2. Make sure that the transmission is filled to the proper level, and check for fluid leaks.

3. Drain the ATF (see step 3 on page 14-239) through a strainer. Inspect the strainer for metal debris or excessive clutch material.

   Does the strainer have metal debris or excessive clutch material?

   YES—Replace the transmission, then go to step 15.

   NO—Replace the ATF (see step 5 on page 14-239), then go to step 4.

4. Clear the DTC with the HDS.

5. Test-drive the vehicle in the D position through all five gears at speeds over 12 mph (20 km/h) for more than 20 seconds, then slow down to a stop.

6. Test-drive the vehicle again in the D position through all five gears at speeds over 12 mph (20 km/h) for more than 20 seconds, then slow down to a stop.

7. Monitor the OBD STATUS for P1733 in the DTCs/ Freeze Data in A/T Mode Menu for a pass/fail.

   Does the HDS indicate FAILED?

   YES—Go to step 8.

   NO—Intermittent failure, the system is OK at this time. If the HDS indicates NOT COMPLETED, return to step 5 and recheck.

8. Clear the DTC with the HDS.

9. Choose Shift Solenoid D in the Miscellaneous Test Menu, and check that shift solenoid valve D operates with the HDS.

   Is a clicking sound heard?

   YES—Go to step 10.

   NO—Replace shift solenoid valve D (see page 14-222), then go to step 15.

10. Choose Clutch Pressure Control (Linear) Solenoid C in the Miscellaneous Test Menu, and test A/T clutch pressure control solenoid valve A with the HDS.

    Does the HDS indicate NORMAL?

    YES—Go to step 11.

    NO—Follow the instructions indicated on the HDS by the test result, but if the HDS has not determined the cause of the failure, go to step 14. If any part is replaced, go to step 15.

11. Test-drive the vehicle in the D position through all five gears at speeds over 12 mph (20 km/h) for more than 20 seconds, then slow down to a stop.

12. Test-drive the vehicle again in the D position through all five gears at speeds over 12 mph (20 km/h) for more than 20 seconds, then slow down to a stop.

13. Monitor the OBD STATUS for P1733 in the DTCs/ Freeze Data in A/T Mode Menu for a pass/fail.

    Does the HDS indicate FAILED?

    YES—Repair hydraulic system related with shift valve D, or replace the transmission, then go to step 14.

    NO—Intermittent failure, the system is OK at this time. If the HDS indicates NOT COMPLETED, return to step 11 and recheck.

(cont'd)

DTC Troubleshooting (cont'd)

14. Inspect A/T clutch pressure control solenoid valve A (see page 14-225).

    Does A/T clutch pressure control solenoid valve A work properly?

    YES—Repair the hydraulic system related to shift valve E, or replace the transmission, then go to step 15.

    NO—Replace A/T clutch pressure control solenoid valve A (see page 14-227), then go to step 15.

15. Clear the DTC with the HDS.
16. Test-drive the vehicle in the D position through all five gears at speeds over 12 mph (20 km/h) for more than 20 seconds, then slow down to a stop.
17. Test-drive the vehicle again in the D position through all five gears at speeds over 12 mph (20 km/h) for more than 20 seconds, then slow down to a stop.
18. Monitor the OBD STATUS for P1731 in the DTCs/ Freeze Data in A/T Mode Menu for a pass/fail.

    Does the HDS indicate PASSED?

    YES—Troubleshooting is complete.■

    NO—If the HDS indicates FAILED, return to step 12 and recheck. If the HDS indicates NOT COMPLETED, return to step 13 and recheck.

DTC P1734: Problem in Shift Control System:

- Shift Solenoid Valves B or C Stuck OFF
- Shift Valves B or C Stuck

NOTE: Before you troubleshoot, record all freeze data and any on-board snapshot, and review General Troubleshooting Information (see page 14-4).

1. Warm up the engine to normal operating temperature (the radiator fan comes on).

2. Make sure that the transmission is filled to the proper level, and check for fluid leaks.

3. Drain the ATF (see step 3 on page 14-239) through a strainer. Inspect the strainer for metal debris or excessive clutch material.

   Does the strainer have metal debris or excessive clutch material?

   YES—Replace the transmission, then go to step 14.

   NO—Replace the ATF (see step 5 on page 14-239), then go to step 4.

4. Clear the DTC with the HDS.

5. Test-drive the vehicle in the D position through all five gears at speeds over 12 mph (20 km/h) for more than 20 seconds, then slow down to a stop.

6. Test-drive the vehicle again in the D position through all five gears at speeds over 12 mph (20 km/h) for more than 20 seconds, then slow down to a stop.

7. Monitor the OBD STATUS for P1734 in the DTCs/ Freeze Data in A/T Mode Menu for a pass/fail.

   Does the HDS indicate FAILED?

   YES—Go to step 8.

   NO—Intermittent failure, the system is OK at this time. If the HDS indicates NOT COMPLETED, return to step 5 and recheck.

8. Clear the DTC with the HDS.

9. Choose Shift Solenoid B in the Miscellaneous Test Menu, and check that shift solenoid valve B operates with the HDS.

   Is a clicking sound heard?

   YES—Go to step 10.

   NO—Replace shift solenoid valve B (see page 14-222), then go to step 14.

10. Choose Shift Solenoid C in the Miscellaneous Test Menu, and check that shift solenoid valve C operates with the HDS.

    Is a clicking sound heard?

    YES—Go to step 11.

    NO—Replace shift solenoid valve C (see page 14-222), then go to step 14.

11. Test-drive the vehicle in the D position through all five gears at speeds over 12 mph (20 km/h) for more than 20 seconds, then slow down to a stop.

12. Test-drive the vehicle again in the D position through all five gears at speeds over 12 mph (20 km/h) for more than 20 seconds, then slow down to a stop.

13. Monitor the OBD STATUS for P1734 in the DTCs/ Freeze Data in A/T Mode Menu for a pass/fail.

    Does the HDS indicate FAILED?

    YES—Repair hydraulic system related with shift valves B and C, or replace the transmission, then go to step 14.

    NO—Intermittent failure, the system is OK at this time. If the HDS indicates NOT COMPLETED, return to step 12 and recheck.

(cont'd)

DTC Troubleshooting (cont'd)

14. Clear the DTC with the HDS.

15. Test-drive the vehicle in the D position through all five gears at speeds over 12 mph (20 km/h) for more than 20 seconds, then slow down to a stop.

16. Test-drive the vehicle again in the D position through all five gears at speeds over 12 mph (20 km/h) for more than 20 seconds, then slow down to a stop.

17. Monitor the OBD STATUS for P1734 in the DTCs/ Freeze Data in A/T Mode Menu for a pass/fail.

    Does the HDS indicate PASSED?

    YES—Troubleshooting is complete. ■

    NO—If the HDS indicates FAILED, return to step 14 and recheck. If the HDS indicates NOT COMPLETED, return to step 15 and recheck.

DTC P2122: Accelerator Pedal Position (APP) Sensor A (Throttle Position Sensor D) Circuit Low Voltage Input

NOTE: Before you troubleshoot, record all freeze data and any on-board snapshot, and review General Troubleshooting Information (see page 14-4).

1. Clear the DTC with the HDS.
2. Turn the ignition switch ON (II).
3. Check whether DTC P2122 is indicated in the DTCs/ Freeze Data in PGM-FI Mode Menu with the HDS.

   Is DTC P2122 indicated in the PGM-FI system?

   YES—Troubleshoot for DTC P2122 in the PGM-FI System (see page 11-245).■

   NO—Go to step 4.

4. Check whether DTC P2122 is indicated in the DTCs/ Freeze Data in A/T Mode Menu with the HDS.

   Is DTC P2122 indicated?

   YES—Go to step 5.

   NO—Intermittent failure, the system is OK at this time.■

5. Update the A/T software in the PCM if it does not have the latest software (see page 14-9), or substitute a known-good PCM (see page 14-10).
6. Turn the ignition switch ON (II).
7. Check for DTC(s) in the DTCs/Freeze Data in A/T Mode Menu with the HDS.

   Is DTC P2122 indicated?

   YES—If the PCM was updated, substitute a known-good PCM (see page 14-10), then recheck. If the PCM was substituted, go to step 1.

   NO—Go to step 8.

8. Monitor the OBD STATUS for P2122 in the DTCs/ Freeze Data in A/T Mode Menu for a pass/fail.

   Does the HDS indicate PASSED?

   YES—If the PCM was updated, troubleshooting is complete. If the PCM was substituted, replace the original PCM (see page 11-219). If any other DTCs were indicated on step 7, go to the indicated DTC's troubleshooting.■

   NO—If the HDS indicates FAILED, check for poor connections and loose terminals at accelerator pedal position sensor A and the PCM. If the PCM was updated, substitute a known-good PCM (see page 14-10), then recheck. If the PCM was substituted, go to step 1. If the HDS indicates NOT COMPLETED, return to step 6 and recheck.

DTC Troubleshooting (cont'd)

DTC P2123: Accelerator Pedal Position (APP) Sensor A (Throttle Position Sensor D) Circuit High Voltage Input

NOTE: Before you troubleshoot, record all freeze data and any on-board snapshot, and review General Troubleshooting Information (see page 14-4).

1. Clear the DTC with the HDS.
2. Turn the ignition switch ON (II).
3. Check whether DTC P2123 is indicated in the DTCs/ Freeze Data in PGM-FI Mode Menu with the HDS.

   Is DTC P2123 indicated in the PGM-FI system?

   YES—Troubleshoot for DTC P2123 in the PGM-FI System (see page 11-248).■

   NO—Go to step 4.
4. Check whether DTC P2123 is indicated in the DTCs/ Freeze Data in A/T Mode Menu with the HDS.

   Is DTC P2123 indicated?

   YES—Go to step 5.

   NO—Intermittent failure, the system is OK at this time.■
5. Update the A/T software in the PCM if it does not have the latest software (see page 14-9), or substitute a known-good PCM (see page 14-10).
6. Turn the ignition switch ON (II).
7. Check for DTC(s) in the DTCs/Freeze Data in A/T Mode Menu with the HDS.

   Is DTC P2123 indicated?

   YES—If the PCM was updated, substitute a known-good PCM (see page 14-10), then recheck. If the PCM was substituted, go to step 1.

   NO—Go to step 8.
8. Monitor the OBD STATUS for P2123 in the DTCs/ Freeze Data in A/T Mode Menu for a pass/fail.

   Does the HDS indicate PASSED?

   YES—If the PCM was updated, troubleshooting is complete. If the PCM was substituted, replace the original PCM (see page 11-219). If any other DTCs were indicated on step 7, go to the indicated DTC's troubleshooting.■

   NO—If the HDS indicates FAILED, check for poor connections and loose terminals at accelerator pedal position sensor A and the PCM. If the PCM was updated, substitute a known-good PCM (see page 14-10), then recheck. If the PCM was substituted, go to step 1. If the HDS indicates NOT COMPLETED, return to step 6 and recheck.

DTC U0028: F-CAN Communication Circuit Error (F-CAN Bus OFF)

NOTE: Before you troubleshoot, record all freeze data and any on-board snapshot, and review General Troubleshooting Information (see page 14-4).

1. Clear the DTC with the HDS.
2. Turn the ignition switch ON (II).
3. Check whether DTC U0155 is indicated in the DTCs/ Freeze Data in PGM-FI Mode Menu with the HDS.

   Is DTC U0155 indicated in the PGM-FI system?

   YES—Troubleshoot for DTC U0155 in the PGM-FI System (see page 11-184).■

   NO—Go to step 4.

4. Check whether DTC U0028 is indicated in the DTCs/ Freeze Data in A/T Mode Menu with the HDS.

   Is DTC U0028 indicated?

   YES—Go to step 5.

   NO—Intermittent failure, the system is OK at this time.■

5. Update the A/T software in the PCM if it does not have the latest software (see page 14-9), or substitute a known-good PCM (see page 14-10).
6. Turn the ignition switch ON (II).
7. Check for DTC(s) in the DTCs/Freeze Data in A/T Mode Menu with the HDS.

   Is DTC U0028 indicated?

   YES—If the PCM was updated, substitute a known-good PCM (see page 14-10), then recheck. If the PCM was substituted, go to step 1.

   NO—Go to step 8.

8. Monitor the OBD STATUS for U0028 in the DTCs/ Freeze Data in A/T Mode Menu for a pass/fail.

   Does the HDS indicate PASSED?

   YES—If the PCM was updated, troubleshooting is complete. If the PCM was substituted, replace the original PCM (see page 11-219). If any other DTCs were indicated on step 7, go to the indicated DTC's troubleshooting.■

   NO—If the HDS indicates FAILED, check for poor connections and loose terminals at the PCM and the connectors on the F-CAN circuit. If the PCM was updated, substitute a known-good PCM (see page 14-10), then recheck. If the PCM was substituted, go to step 1. If the HDS indicates NOT COMPLETED, return to step 6 and recheck.

DTC Troubleshooting (cont'd)

DTC U0122: Lost Communication with VSA Control Unit

NOTE: Before you troubleshoot, record all freeze data and any on-board snapshot, and review General Troubleshooting Information (see page 14-4).

1. Clear the DTC with the HDS.
2. Turn the ignition switch ON (II).
3. Check that DTC U0122 recurs.

   Is DTC U0122 indicated?

   YES—Go to step 4.

   NO—Intermittent failure, the system is OK at this time. ■
4. Check whether any DTC is indicated in the DTCs/ Freeze Data in VSA Mode Menu with the HDS.

   Is any DTC indicated in the VSA?

   YES—Troubleshoot for the indicated DTC in the VSA system (see page 19-41). ■

   NO—Go to step 5.
5. Turn the ignition switch OFF.
6. Jump the SCS line with the HDS.
7. Disconnect PCM connector A (44P).
8. Disconnect the VSA modulator-control unit connector.
9. Check for continuity between PCM connector terminal A36 and VSA modulator-control unit connector terminal No. 39, and between A37 and terminal No. 38.

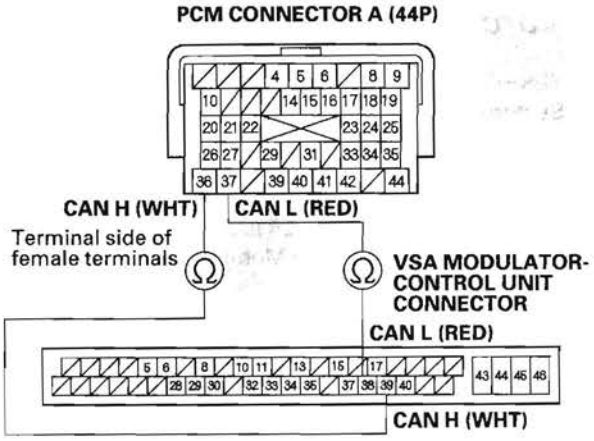

Wire side of female terminals

Is there continuity?

YES—Go to step 10.

NO—Go to step 14.

10. Update the A/T software in the PCM if it does not have the latest software (see page 14-9), or substitute a known-good PCM (see page 14-10).

11. Turn the ignition switch ON (II).

12. Check for DTC(s) in the DTCs/Freeze Data in A/T Mode Menu with the HDS.

    Is DTC U0122 indicated?

    YES—If the PCM was updated, substitute a known-good PCM (see page 14-10), then recheck. If the PCM was substituted, go to step 1.

    NO—Go to step 13.

13. Monitor the OBD STATUS for U0122 in the DTCs/Freeze Data in A/T Mode Menu for a pass/fail.

    Does the HDS indicate PASSED?

    YES—If the PCM was updated, troubleshooting is complete. If the PCM was substituted, replace the original PCM (see page 11-219). If any other DTCs were indicated on step 12, go to the indicated DTC's troubleshooting. ■

    NO—If the HDS indicates FAILED, check for poor connections and loose terminals at the VSA modulator-control unit the PCM. If the PCM was updated, substitute a known-good PCM (see page 14-10), then recheck. If the PCM was substituted, go to step 1. If the HDS indicates NOT COMPLETED, keep idling until a result comes on.

14. Check the communication line between the VSA modulator-control unit and the gauge control module with the HDS.

    Is there an open or poor connection in the F-CAN line between the VSA modulator-control unit and gauge control module?

    YES—Repair open in the wires between the VSA modulator-control unit connector and CAN communication lines. ■

    NO—Substitute a known-good VSA modulator-control unit (see page 19-97), then recheck. If the symptom/indication goes away with a known-good VSA modulator-control unit, replace the original VSA modulator-control unit. ■

DTC Troubleshooting (cont'd)

DTC U0155: Lost Communication with Gauge Control Module

NOTE: Before you troubleshoot, record all freeze data and any on-board snapshot, and review General Troubleshooting Information (see page 14-4).

1. Clear the DTC with the HDS.
2. Turn the ignition switch ON (II).
3. Check whether DTC U0155 is indicated in the DTCs/Freeze Data in PGM-FI Mode Menu with the HDS.

   Is DTC U0155 indicated in the PGM-FI system?

   YES—Troubleshoot for DTC U0155 in the PGM-FI System (see page 11-184).■

   NO—Go to step 4.

4. Check whether the DTC U0155 is indicated in the DTCs/Freeze Data in A/T Mode Menu with the HDS.

   Is DTC U0155 indicated?

   YES—Go to step 5.

   NO—Intermittent failure, the system is OK at this time.■

5. Update the A/T software in the PCM if it does not have the latest software (see page 14-9), or substitute a known-good PCM (see page 14-10).
6. Turn the ignition switch ON (II).
7. Check for DTC(s) in the DTCs/Freeze Data in A/T Mode Menu with the HDS.

   Is DTC U0155 indicated?

   YES—If the PCM was updated, substitute a known-good PCM (see page 14-10), then recheck. If the PCM was substituted, go to step 1.

   NO—Go to step 8.

8. Monitor the OBD STATUS for U0155 in the DTCs/Freeze Data in A/T Mode Menu for a pass/fail.

   Does the HDS indicate PASSED?

   YES—If the PCM was updated, troubleshooting is complete. If the PCM was substituted, replace the original PCM (see page 11-219). If any other DTCs were indicated on step 7, go to the indicated DTC's troubleshooting.■

   NO—If the HDS indicates FAILED, check for poor connections and loose terminals at the gauge control module and the PCM. If the PCM was updated, substitute a known-good PCM (see page 14-10), then recheck. If the PCM was substituted, go to step 1. If the HDS indicates NOT COMPLETED, keep idling until a result comes on.

Road Test

1. Warm up the engine to normal operating temperature (the radiator fan comes on).

2. Apply the parking brake, and block both rear wheels. Start the engine, then shift to the D position while pressing the brake pedal. Press the accelerator pedal, and release it suddenly. The engine should not stall.

3. Repeat step 2 in all shift lever positions.

4. Connect the HDS to the DLC (A), and go to the A/T data list. If the HDS does not communicate with the PCM, troubleshoot the DLC circuit (see page 11-197).

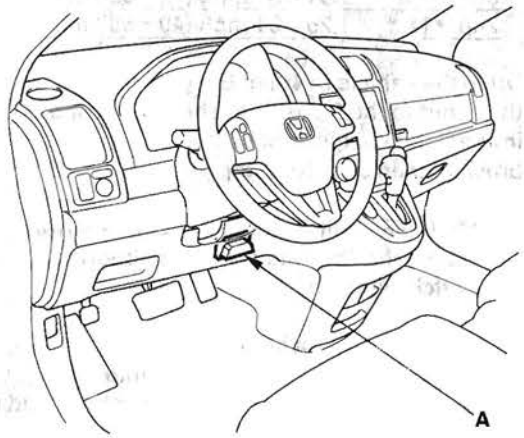

5. Prepare the HDS to take a HIGH SPEED SNAPSHOT (refer to the HDS user's guide for more details if needed):

   - Select the High Speed icon.
   - Select these parameters:
     - VSS veh speed
     - Output Shaft (Countershaft) Speed
     - Input Shaft (Mainshaft) Speed (rpm)
     - RPM engine speed
     - Relative TP Sensor
     - APP Sensor A
     - ATF Temp sensor
     - Battery voltage
     - Shift control
     - Brake Switch
   - Set the Trigger Type to Parameter.
   - Adjust the Parameter setting to APP Sensor A above 1.75 V.
   - Set the recording time to 60 seconds.
   - Set the trigger point to −30 seconds.

6. Find a suitable level road. When you are ready to do the test, press OK on the HDS.

7. Monitor the HDS and accelerate quickly until the APP Sensor A reads 1.75 V. Maintain a steady throttle until the transmission shifts to 5th gear, then slow the vehicle and come to a stop.

8. Save the snapshot if the entire event was recorded or increase the recording time setting as necessary and repeat step 7.

9. Adjust the parameter setting to 2.25 V. Test-drive the vehicle again. While monitoring the HDS, accelerate quickly until the APP Sensor A reads 2.25 V. Maintain a steady throttle until the transmission shifts to 5th gear (or reasonable speed), then slow the vehicle and come to a stop.

10. Save the snapshot if the entire event was recorded or increase the recording time setting as necessary and repeat step 9.

11. Accelerate quickly until the accelerator pedal is to the floor. Maintain a steady pedal until the transmission shifts to 3rd gear, then slow to a stop, and save the snapshot.

(cont'd)

Road Test (cont'd)

12. Review each snapshot individually, and compare the Shift Command, the APP Sensor A voltage, and the Vehicle Speed to the table below.

Upshift: D Position

Accelerator pedal position sensor A voltage: 1.75 V	
1st→2nd	12—15 mph (19—24 km/h)
2nd→3rd	20—24 mph (32—39 km/h)
3rd→4th	28—33 mph (45—53 km/h)
4th→5th	40—46 mph (64—74 km/h)
Lock-up ON	31—36 mph (50—58 km/h)
Accelerator pedal position sensor A voltage: 2.25 V	
1st→2nd	20—24 mph (32—39 km/h)
2nd→3rd	34—40 mph (55—64 km/h)
3rd→4th	52—59 mph (84—95 km/h)
4th→5th	82—91 mph (132—146 km/h)
Lock-up ON	76—84 mph (122—135 km/h)
Fully-opened throttle Accelerator pedal position sensor A voltage: 4.5 V	
1st→2nd	36—43 mph (58—69 km/h)
2nd→3rd	64—72 mph (103—116 km/h)
3rd→4th	99—109 mph (159—175 km/h)

Downshift: D Position (reference)

Accelerator pedal position sensor A voltage: 1.75 V	
Lock-up OFF	31—36 mph (50—58 km/h)
5th→4th	31—37 mph (50—60 km/h)
4th→3rd	21—25 mph (34—40 km/h)
3rd→1st	4—8 mph (7—13 km/h)
Accelerator pedal position sensor A voltage: 2.25 V	
Lock-up OFF	55—63 mph (88—101 km/h)
Fully-opened throttle Accelerator pedal position sensor A voltage: 4.5 V	
5th→4th	113—123 mph (182—198 km/h)
4th→3rd	83—92 mph (134—148 km/h)
3rd→2nd	51—59 mph (82—95 km/h)
2nd→1st	25—31 mph (40—50 km/h)

13. Drive the vehicle in 4th or 5th gear in the D position, then shift to the 2 position. The vehicle should immediately begin to slow down from engine braking, then slow to a stop.

14. Shift to the R position, briefly accelerate from a stop at full throttle, and check for abnormal noise and clutch slippage.

15. Park the vehicle on a slope (about 16 degrees), apply the parking brake, and shift into the P position. Release the brake; the vehicle should not move.

    NOTE: Always use the brake to hold the vehicle, when stopped on an incline in gear. Depending on the grade of the incline, the vehicle could roll backwards if the brake is released.

Stall Speed Test

1. Make sure the transmission fluid is filled to the proper level (see page 14-238).

2. Apply the parking brake, and block all four wheels.

3. Connect the HDS to the DLC (A), and go to the A/T data list. If the HDS does not communicate with the PCM, troubleshoot the DLC circuit (see page 11-197).

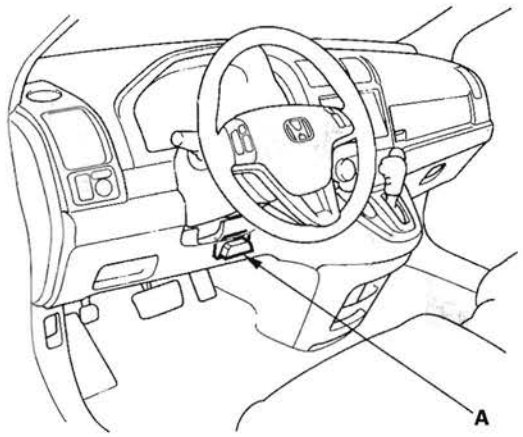

4. Make sure the A/C switch OFF.

5. Start the engine, and warm it up to normal operating temperature (the radiator fan comes on). After the engine is warmed up, shift to the D position.

6. Firmly press and hold the brake pedal, and then firmly press the accelerator pedal for 6 to 8 seconds, and note engine speed. Do not move the shift lever while raising engine speed.

7. Allow 2 minutes for cooling, then repeat the test in the 2, 1, and R positions.

   NOTE:
   - Do not test stall speed for more than 10 seconds at a time.
   - Stall speed tests should be used for diagnostic purposes only.
   - Stall speed should be the same in the D, 2, 1, and R positions.
   - Do not test stall speed with the A/T pressure gauges installed.

   Stall Speed rpm:
   Specification: 2,445 rpm
   Service Limit: 2,295—2,595 rpm

8. If the stall speeds are out of the service limit, the possible problems and probable causes are listed in the table.

Problem	Probable causes
Stall speed rpm high in the D, 2, 1, and R positions	• ATF pump output low • Clogged ATF strainer • Regulator valve stuck • Slipping clutch
Stall speed rpm high in the 1 position	Slippage of 1st clutch
Stall speed rpm high in the 2 position	Slippage of 2nd clutch
Stall speed rpm high in the R position	Slippage of 4th clutch
Stall speed rpm low in the D, 2, 1, and R positions	• Engine output low • Engine throttle valve closed • Torque converter one-way clutch slipping

Pressure Test

Special Tools Required
- A/T clutch pressure gauge set 07406-0020400 or 07406-0020401
- A/T pressure hose, 2,210 mm 07MAJ-PY4011A
- A/T pressure hose adapter 07MAJ-PY40120

1. Make sure the transmission fluid is filled to the proper level (see page 14-238).

2. 4WD model: Raise the vehicle on a lift, make sure it is securely supported, and allow all four wheels to rotate freely.
   2WD model: Raise the front of the vehicle, make sure it is securely supported, and allow the front wheels to rotate freely. Or raise the vehicle.

3. Remove the splash shield.

4. Connect the oil pressure gauge to the line pressure inspection port (A). Do not allow dust or other foreign particles to enter the hole while connecting the gauge.

A/T OIL PRESSURE GAUGE SET W/PANEL 07406-0020400 or 07406-0020401

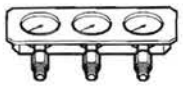

A/T PRESSURE HOSE, 2,210 mm 07MAJ-PY4011A



A/T PRESSURE HOSE ADAPTER 07MAJ-PY40120

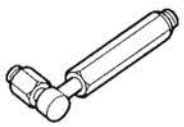

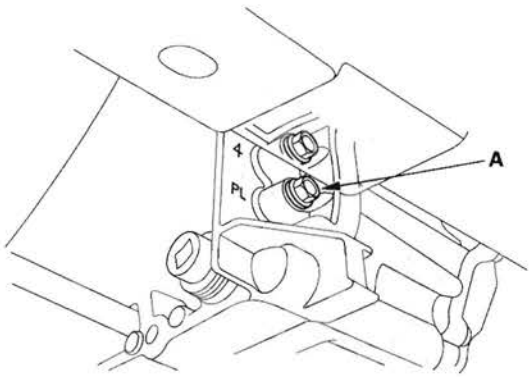

5. Start the engine, and warm it up to normal operating temperature (the radiator fan comes on).

6. Turn off the engine, and connect the HDS to the DLC (A).

   NOTE: If the HDS does not communicate with the PCM, troubleshoot the DLC circuit (see page 11-197).

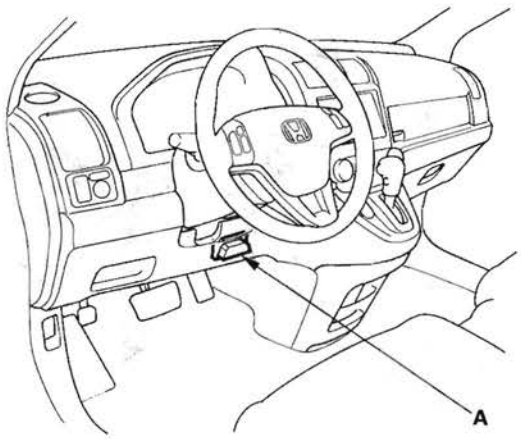

7. With the shift lever in the P or N position while holding the engine speed at 2,000 rpm, measure the line pressure.

   NOTE: If the shift lever is in positions other than P or N, higher pressure may be shown.

Pressure	Fluid Pressure	
	Standard	Service Limit
Line	930—980 kPa (9.5—10.0 kgf/cm², 140—142 psi)	840 kPa (8.7 kgf/cm², 120 psi)

8. Turn the engine off, then disconnect the oil pressure gauge from the line pressure inspection port.

9. Install the sealing bolt to the line pressure inspection port with a new sealing washer, and tighten the bolt to 18 N·m (1.8 kgf·m, 13 lbf·ft). Do not reuse the old sealing washer.

10. Connect the oil pressure gauge to the 1st clutch pressure inspection port (B).

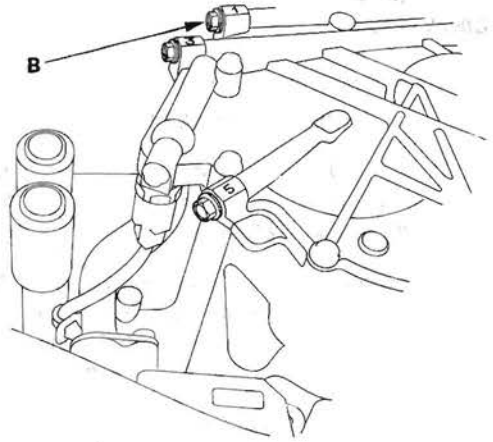

11. Remove the air cleaner housing and intake air duct, and connect the oil pressure gauge to the 2nd clutch pressure inspection port (C). Then temporarily install the air cleaner housing and the intake air duct.

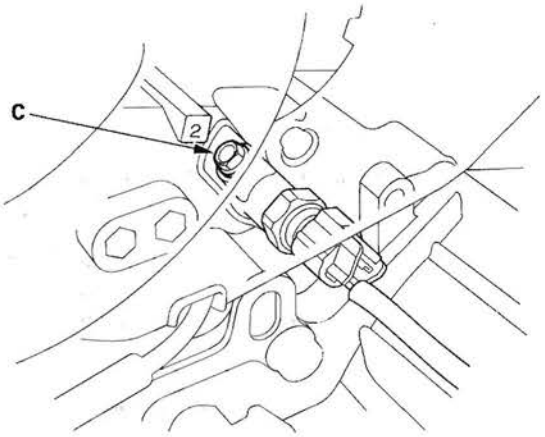

12. Start the engine.

13. Shift to the 1 position, and measure the 1st clutch pressure at the 1st clutch pressure inspection port (B) while holding the engine speed at 2,000 rpm.

14. Shift to the 2 position, and measure the 2nd clutch pressure at the 2nd clutch pressure inspection port (C) while holding the engine speed at 2,000 rpm.

Pressure	Fluid Pressure	
	Standard	Service Limit
1st clutch (B) 2nd clutch (C)	930—980 kPa (9.5—10.0 kgf/cm², 140—142 psi)	840 kPa (8.6 kgf/cm², 120 psi)

15. Turn the engine off, remove the air cleaner housing and intake air duct, then disconnect the oil pressure gauges from the 1st clutch pressure and 2nd clutch pressure inspection ports.

16. Install the sealing bolts in the 1st clutch pressure and 2nd clutch pressure inspection ports with new sealing washers, and tighten the bolts to 18 N·m (1.8 kgf·m, 13 lbf·ft). Do not reuse the old sealing washers.

17. Install the air cleaner housing and intake air duct.

(cont'd)

Pressure Test (cont'd)

18. Connect the oil pressure gauge to the 3rd clutch pressure inspection port (D) and the 5th clutch pressure inspection port (F).

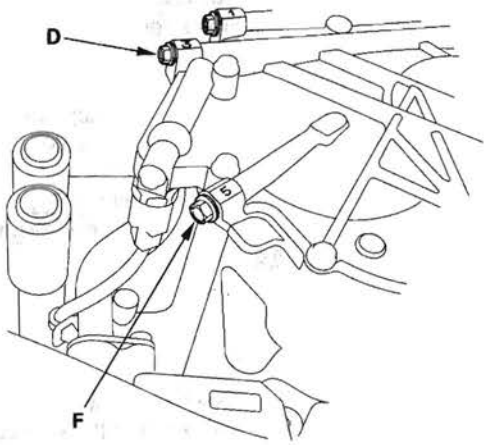

19. Connect the oil pressure gauge to the 4th clutch pressure inspection port (E).

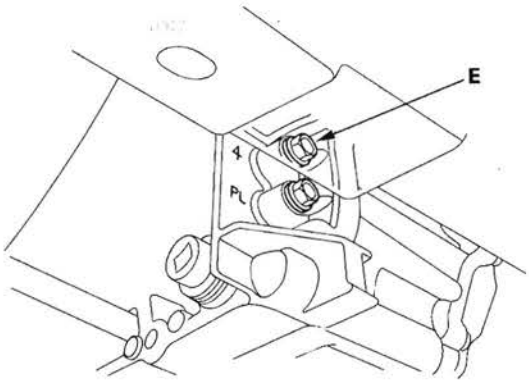

20. Cancel the transmission 2nd-hold control mode with the HDS; choose Pressure Test Assistance Mode in the Miscellaneous Test Menu of the A/T Mode Menu.

21. Start the engine, shift to the D position, and select the D3 driving mode by pressing the D3 switch.

22. Measure the 3rd clutch pressure at the 3rd clutch pressure inspection port (D) while holding the engine speed at 2,000 rpm.

23. Release the D3 driving mode by pressing the D3 switch, and measure the 4th clutch pressure at the 4th clutch pressure inspection port (E) while holding the engine speed at 2,000 rpm.

24. Measure the 5th clutch pressure at the 5th clutch pressure inspection port (F) while holding the engine speed at 2,000 rpm.

Pressure	Fluid Pressure	
	Standard	Service Limit
3rd clutch (D) 4th clutch (E) 5th clutch (F)	930—980 kPa (9.5—10.0 kgf/cm², 140—142 psi)	840 kPa (8.6 kgf/cm², 120 psi)

25. Bring the engine back to an idle, then apply the brake pedal to stop the wheels from rotating.

26. Shift to the R position, then release the brake pedal. Raise the engine speed to 2,000 rpm, and measure the 4th clutch pressure at the 4th clutch pressure inspection port (E).

Pressure	Fluid Pressure	
	Standard	Service Limit
4th clutch (F) in R	930—980 kPa (9.5—10.0 kgf/cm², 140—142 psi)	840 kPa (8.6 kgf/cm², 120 psi)

27. Turn the engine off, then disconnect the oil pressure gauges from the 3rd, 4th, and 5th clutch pressure inspection ports.

28. Install the sealing bolts in the 3rd, 4th, and 5th clutch pressure inspection ports with new sealing washers, and tighten the bolts to 18 N·m (1.8 kgf·m, 13 lbf·ft). Do not reuse the old sealing washers.

29. If the pressure measurements are out of the service limit, the possible problems and probable causes are listed in the table.

Problem	Probable causes
No or low line pressure	• Worn torque converter • Worn ATF pump • Regulator valve stuck • Torque converter check valve stuck • Clogged ATF strainer
No or low 1st clutch pressure	• Worn 1st clutch • Leaking O-rings
No or low 2nd clutch pressure	• Worn 2nd clutch • Leaking O-rings
No or low 3rd clutch pressure	• Worn 3rd clutch • Leaking O-rings
No or low 4th clutch pressure	• Worn 4th clutch • Leaking O-rings
No or low 5th clutch pressure	• Worn 5th clutch • Leaking O-rings
No or low 4th clutch pressure in the R position	• Servo valve stuck • Worn 4th clutch • Leaking O-rings

30. Install the splash shield.

Shift Solenoid Valve Test

1. Connect the HDS to the DLC (A).

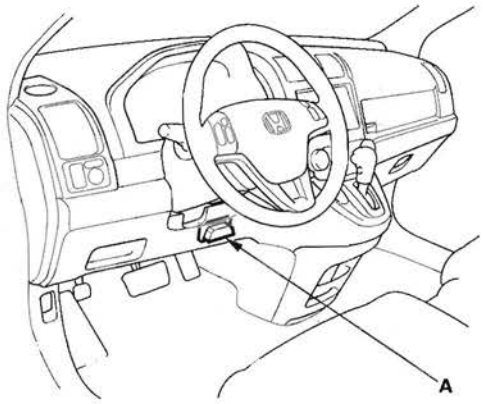

2. Choose Shift Solenoid A, B, C, D, and E in the Miscellaneous Test Menu on the HDS.

   NOTE: If the HDS does not communicate with the PCM, troubleshoot the DLC circuit (see page 11-197).

3. Check that shift solenoid valves A, B, C, D, and E operate with the HDS. A clicking sound should be heard.

   - If a clicking sound is heard, the valves are OK. The test is complete, disconnect the HDS.
   - If no clicking sound is heard, go to step 4, and test the solenoid valves.

4. Raise the vehicle up on a lift, or apply the parking brake, block the rear wheels, and raise the front of the vehicle. Make sure it is securely supported.

5. Remove the splash shield.

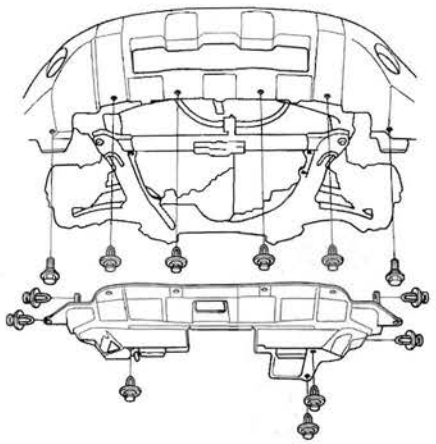

6. Disconnect the shift solenoid harness connector.

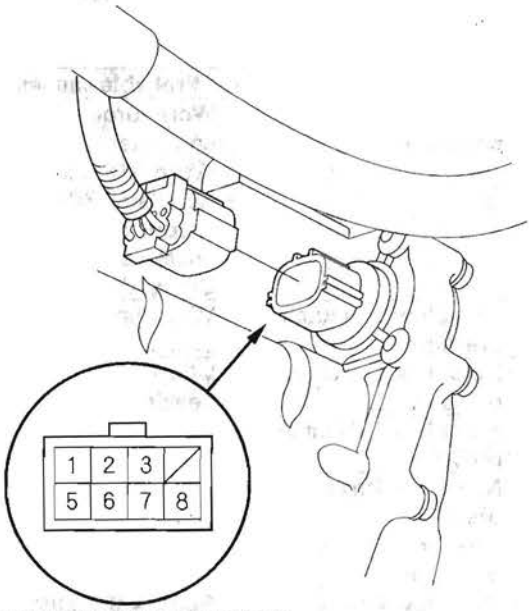

Terminal side of male terminals

7. Measure shift solenoid valve resistance between shift solenoid harness connector terminals below and body ground:

   - No. 1 terminal: Shift solenoid valve C
   - No. 2 terminal: Shift solenoid valve B
   - No. 3 terminal: Shift solenoid valve E
   - No. 5 terminal: Shift solenoid valve A
   - No. 8 terminal: Shift solenoid valve D

   Standard: 12—25 Ω

   - If the resistance is within the standard, go to step 8 and check solenoid valve for clicking sound.
   - If the resistance is out of standard, go to step 9 and test shift solenoid valves.

8. Connect a jumper wire from the battery positive terminal to each shift solenoid harness connector terminals individually. A clicking sound should be heard.

   - If a clicking sound is heard, the valves are OK. The test is complete, connect the connector.
   - If no clicking sound is heard, go to step 9 and test shift solenoid valves.

9. Remove the drain plug (A), and drain the transmission fluid (ATF).

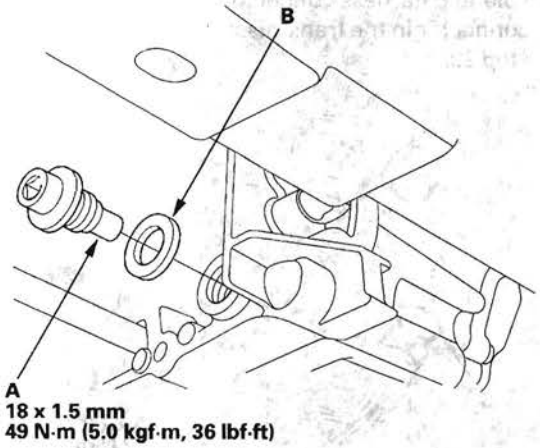

10. Reinstall the drain plug with the new sealing washer (B).

11. Make sure you have the audio system or the navigation system (if equipped) anti-theft code, and write down the audio presets.

12. Disconnect the negative terminal from the battery, then disconnect the positive terminal.

13. Remove the battery hold-down bracket, and remove the battery cover, battery, and battery tray.

14. Remove the battery base.

15. Remove the air cleaner housing and intake air duct.

16. Remove the ATF dipstick, and remove the bolts securing the ATF cooler line (A).

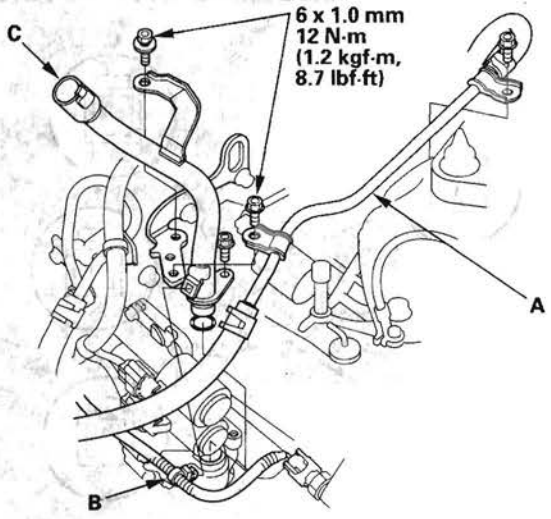

17. Remove the harness clamp (B), and remove the ATF dipstick guide tube (C).

18. Remove the shift solenoid valve cover (A), dowel pins (B), and gasket (C).

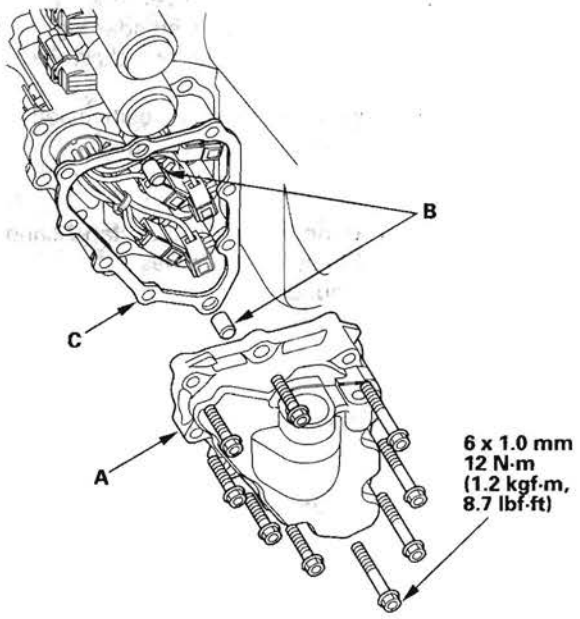

(cont'd)

Shift Solenoid Valve Test (cont'd)

19. Disconnect the connectors from shift solenoid valve A, shift solenoid valve B, shift solenoid valve C, shift solenoid valve D, and shift solenoid valve E.

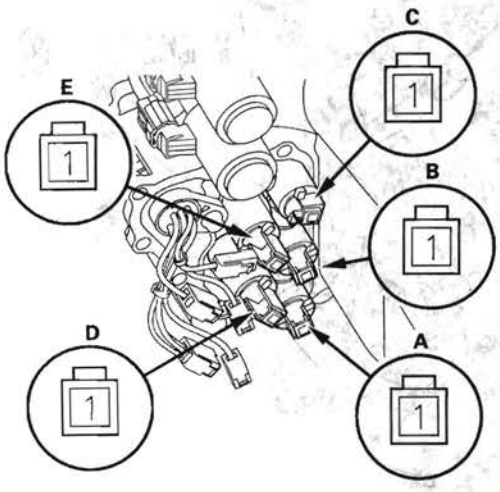

20. Measure the resistance of each shift solenoid valve between the connector terminals and body ground:

    Standard: 12—25 Ω

    - If the resistance is out of standard, go to step 23 and replace shift solenoid valve.
    - If the resistance is within the standard, go to step 21 and check solenoid valve for a clicking sound.

21. Connect a jumper wire from the positive battery terminal to each solenoid valve terminal individually.

    - If a clicking sound is heard, go to step 22 and replace the shift solenoid harness.
    - If no clicking sound is heard, go to step 23 and replace shift solenoid valve.

22. Remove the shift solenoid harness connector (A), and replace it. Install a new O-ring (B) on the shift solenoid harness connector, and install the connector in the transmission housing, then go to step 28.

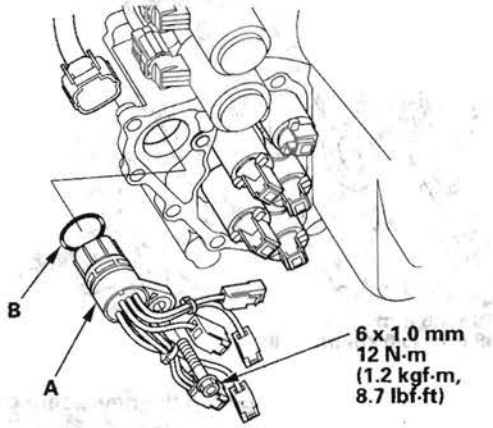

23. Remove the mounting bolts, then remove the solenoid valves.

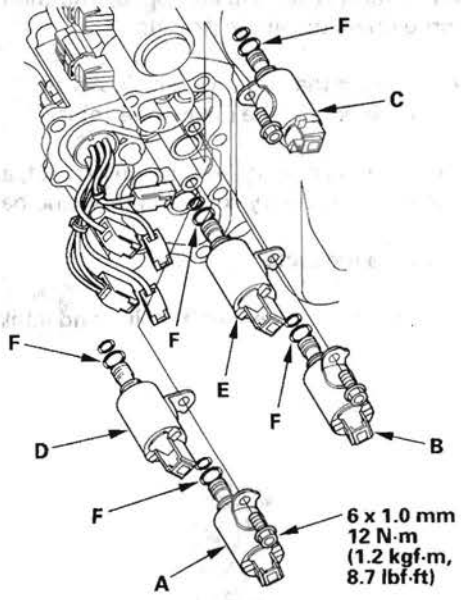

24. Install new O-rings (two O-rings per solenoid valve) (F) on the reused solenoid valves.

    NOTE: A new solenoid valve comes with new O-rings. If you install a new solenoid valve, use the O-rings provided on it.

25. Install shift solenoid valve C (brown connector), shift solenoid valve D (black connector), and shift solenoid valve E (black connector) by holding the shift solenoid valve body; make sure the mounting bracket contacts the servo body.

    NOTE: Do not hold the solenoid valve by the connector when installing the solenoid valve. Be sure to hold the solenoid valve body.

26. Install shift solenoid valve A (brown connector) by holding the shift solenoid valve body; make sure the mounting bracket contacts the bracket of shift solenoid valve D.

    NOTE: Do not install shift solenoid valve A before installing shift solenoid valve D. If shift solenoid valve A is installed before installing shift solenoid valve D, it may damage the hydraulic control system.

27. Install shift solenoid valve B (brown connector) by holding the shift solenoid valve body; make sure the mounting bracket contacts the bracket of shift solenoid valve E.

    NOTE: Do not install shift solenoid valve B before installing shift solenoid valve E. If shift solenoid valve B is installed before installing shift solenoid valve E, it may damage the hydraulic control system.

28. Connect the harness terminals to the solenoids:

    - RED wire connector to shift solenoid valve E.
    - GRN wire connector to shift solenoid valve C.
    - ORN wire connector to shift solenoid valve B.
    - BLU wire connector to shift solenoid valve A.
    - YEL, WHT, WHT wire connector to shift solenoid valve D.

29. Install the shift solenoid valve cover, dowel pins, and a new gasket.

30. Install the new O-ring on the ATF dipstick guide tube, and install the guide tube then secure it with the bolts.

31. Check the connector for rust, dirt, or oil, then connect the connector securely. Install the harness clamp in its clamp bracket on the ATF dipstick guide tube.

32. Secure the ATF cooler line with the bolts.

33. Refill the transmission with ATF (see step 5 on page 14-239).

34. Install the intake air duct and air cleaner housing.

35. Install the battery base.

36. Install the battery tray, battery, battery cover, and battery hold-down bracket, then connect battery terminals.

37. Install the splash shield.

38. Enter the audio system or the navigation system (if equipped) anti-theft code, then enter the audio presets, and set the clock.

Shift Solenoid Valve and Shift Solenoid Wire Harness Replacement

1. Make sure you have the audio system or the navigation system (if equipped) anti-theft code, and write down the audio presets.
2. Raise the vehicle on a lift, or apply the parking brake, block the rear wheels, and raise the front of the vehicle. Make sure it is securely supported.
3. Remove the splash shield.
4. Remove the drain plug (A), and drain the transmission fluid (ATF).

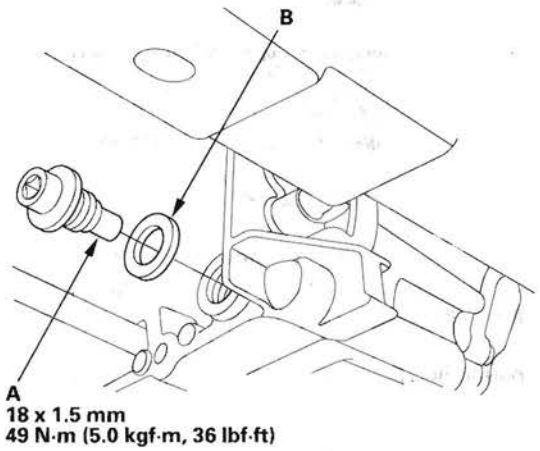

5. Reinstall the drain plug with the new sealing washer (B).
6. Disconnect the negative terminal from the battery, then disconnect the positive terminal.
7. Remove the battery hold-down bracket, and remove the battery cover, battery, and battery tray.
8. Remove the battery base.
9. Remove the air cleaner housing and intake air duct.
10. Remove the ATF dipstick, and remove the bolts securing the ATF cooler line (A).

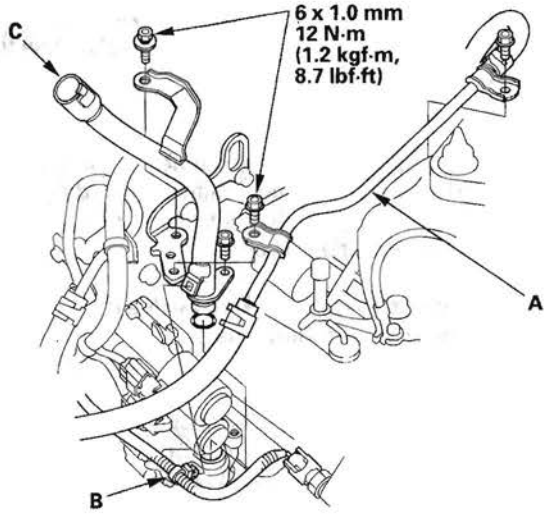

11. Remove the harness clamp (B), and remove the ATF dipstick guide tube (C).
12. Remove the shift solenoid valve cover (A), dowel pins (B), and gasket (C).

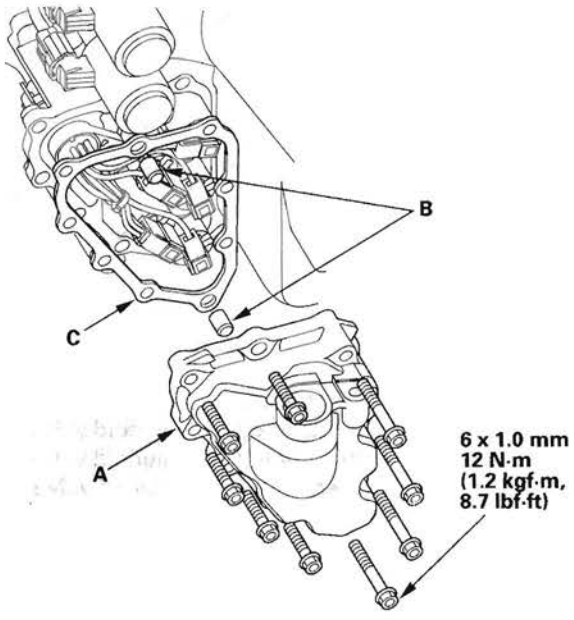

13. Disconnect the shift solenoid valve connectors.

    - If replacing shift solenoid valve(s), go to step 14.
    - If replacing the shift solenoid harness, remove the shift solenoid harness connector (A), and replace it. Install a new O-ring (B) on the shift solenoid harness connector, and install the connector in the transmission housing, then go to step 19.

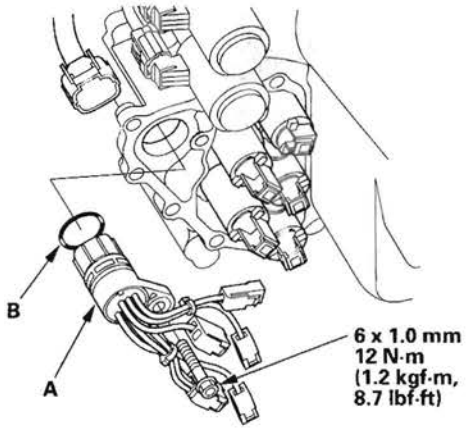

14. Remove the mounting bolts, then remove the solenoid valves.

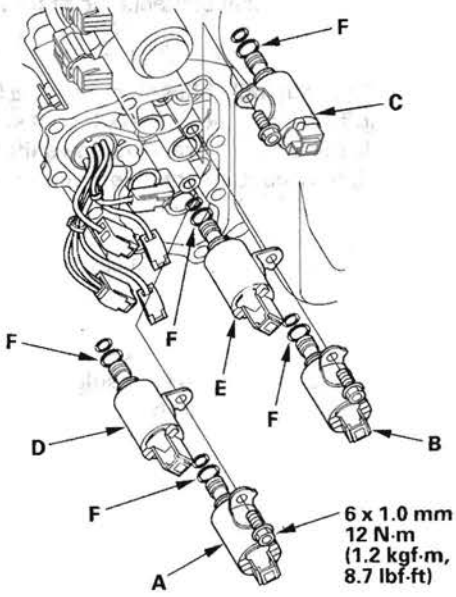

15. Install new O-rings (two O-rings per solenoid valve) (F) on the reused solenoid valves.

    NOTE: A new solenoid valve comes with new O-rings. If you install a new solenoid valve, use the O-rings provided on it.

16. Install shift solenoid valve C (brown connector), shift solenoid valve D (black connector), and shift solenoid valve E (black connector) by holding the shift solenoid valve body; make sure the mounting bracket contacts the servo body.

    NOTE: Do not hold the solenoid valve by the connector when installing the solenoid valve. Be sure to hold the solenoid valve body.

17. Install shift solenoid valve A (brown connector) by holding the shift solenoid valve body; make sure the mounting bracket contacts the bracket of shift solenoid valve D.

    NOTE: Do not install shift solenoid valve A before installing shift solenoid valve D. If shift solenoid valve A is installed before installing shift solenoid valve D, it may damage the hydraulic control system.

(cont'd)

Shift Solenoid Valve and Shift Solenoid Wire Harness Replacement (cont'd)

18. Install shift solenoid valve B (brown connector) by holding the shift solenoid valve body; make sure the mounting bracket contacts the bracket of shift solenoid valve E.

    NOTE: Do not install shift solenoid valve B before installing shift solenoid valve E. If shift solenoid valve B is installed before installing shift solenoid valve E, it may damage the hydraulic control system.

19. Connect the harness terminals to the solenoids:

    - RED wire connector to shift solenoid valve E.
    - GRN wire connector to shift solenoid valve C.
    - ORN wire connector to shift solenoid valve B.
    - BLU wire connector to shift solenoid valve A.
    - YEL, WHT, WHT wire connector to shift solenoid valve D.

20. Install the shift solenoid valve cover, dowel pins, and a new gasket.

21. Install the new O-ring on the ATF dipstick guide tube, and install the guide tube then secure it with the bolts.

22. Check the connector for rust, dirt, or oil, then connect the connector securely. Install the harness clamp in its clamp bracket on the ATF dipstick guide tube.

23. Secure the ATF cooler line with the bolts.

24. Refill the transmission with ATF (see step 5 on page 14-239).

25. Install the intake air duct and air cleaner housing.

26. Install the battery base.

27. Install the battery tray, battery, battery cover, and battery hold-down bracket, then connect battery terminals.

28. Install the splash shield.

29. Enter the audio system or the navigation system (if equipped) anti-theft code, then enter the audio presets, and set the clock.

A/T Clutch Pressure Control Solenoid Valve A Test

1. Connect the HDS to the DLC (A).

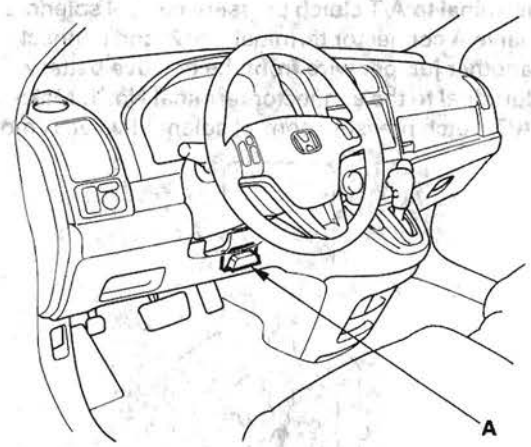

2. Choose Clutch Pressure Control (Linear) Solenoid A in the Miscellaneous Test Menu on the HDS.

   NOTE: If the HDS does not communicate with the PCM, troubleshoot the DLC circuit (see page 11-197).

3. Test A/T clutch pressure control solenoid valve A with the HDS.

   - If the valve tests OK, the test is complete. Disconnect the HDS.
   - If the valve does not test OK, follow the instructions on the HDS.
   - If the valve does not test OK, and the HDS does not determine the cause, go to step 4.

4. Remove the air cleaner housing and intake air duct.

5. Disconnect the A/T clutch pressure control solenoid valve A connector.

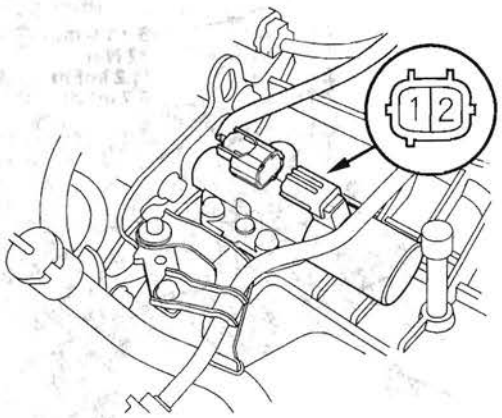

6. Measure the A/T clutch pressure control solenoid valve A resistance at the connector terminals.

   Standard: 3—10 Ω

   - If the resistance is out of standard, replace A/T clutch pressure control solenoid valve A (see page 14-227).
   - If the resistance is within the standard, go to step 7.

7. Connect a jumper wire from the negative battery terminal to the solenoid valve A connector terminal No. 2, and connect another jumper wire from the positive battery terminal to the connector terminal No. 1.

   - If a clicking sound is heard, the valve is OK. Reconnect the connector, and install all removed parts.
   - If no clicking sound is heard, go to step 8.

(cont'd)

A/T Clutch Pressure Control Solenoid Valve A Test (cont'd)

8. Remove the mounting bolts and A/T clutch pressure control solenoid valve A.

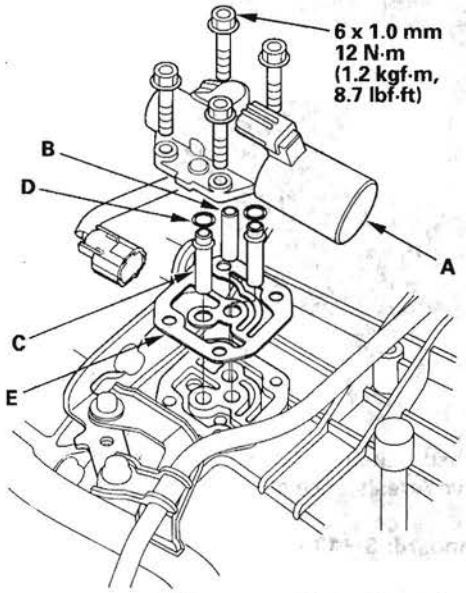

9. Remove the ATF pipe (B), ATF joint pipes (C), O-rings (D), and gasket (E).

10. Check the fluid passage of the solenoid valve for contamination.

11. Connect a jumper wire from the negative battery terminal to A/T clutch pressure control solenoid valve A connector terminal No. 2, and connect another jumper wire from the positive battery terminal to the connector terminal No. 1. Make sure A/T clutch pressure control solenoid valve A moves.

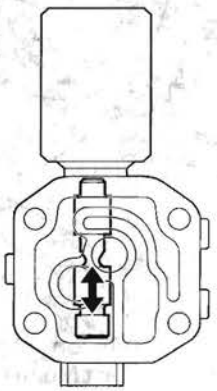

12. Disconnect one of the jumper wires and check valve movement at the fluid passage in valve body mounting surface. If the valve binds or moves sluggishly, or if the solenoid valve does not operate, replace A/T clutch pressure control solenoid valve A.

13. Clean the mounting surface and fluid passage of the solenoid valve body and transmission housing.

14. Install the new gasket on the transmission housing, and install the ATF pipe and ATF joint pipes. Install the new O-rings over the ATF joint pipes.

15. Install A/T clutch pressure control solenoid valve A.

16. Check the connector for rust, dirt, or oil, clean or repair if necessary, then connect the connector securely.

17. Install the intake air duct and air cleaner housing.

A/T Clutch Pressure Control Solenoid Valve A Replacement

1. Remove the air cleaner housing and intake air duct.
2. Disconnect the A/T clutch pressure control solenoid valve A connector.
3. Remove the mounting bolts and A/T clutch pressure control solenoid valve A.

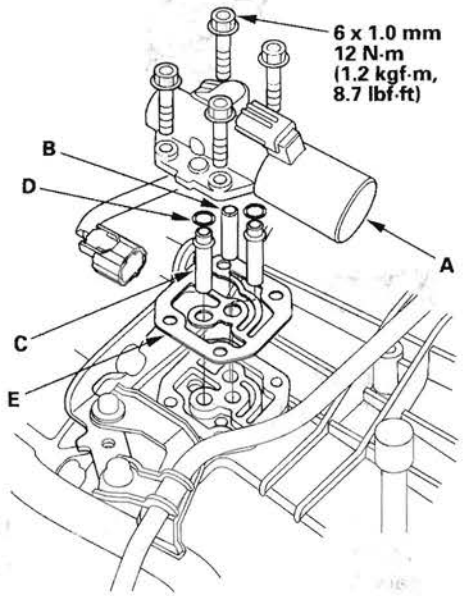

4. Remove the ATF pipe (B), ATF joint pipes (C), O-rings (D), and gasket (E).
5. Clean the mounting surface and fluid passage of the solenoid valve body and transmission housing.
6. Install the new gasket on the transmission housing, and install the ATF pipe and ATF joint pipes. Install the new O-rings over the ATF joint pipes.
7. Install A/T clutch pressure control solenoid valve A.
8. Check the connector for rust, dirt, or oil, then connect the connector securely.
9. Install the intake air duct and air cleaner housing.

A/T Clutch Pressure Control Solenoid Valve B Test

1. Connect the HDS to the DLC (A).

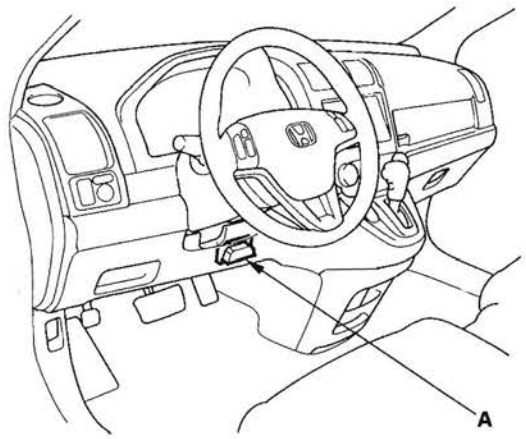

2. Choose Clutch Pressure Control (Linear) Solenoid B in the Miscellaneous Test Menu on the HDS.

   NOTE: If the HDS does not communicate with the PCM, troubleshoot the DLC circuit (see page 11-197).

3. Test A/T clutch pressure control solenoid valve B with the HDS.

   - If the valve tests OK, the test is complete. Disconnect the HDS.
   - If the valve does not test OK, follow the instructions on the HDS.
   - If the valve does not test OK, and the HDS does not determine the cause, go to step 4.

4. Raise the vehicle on a lift, or apply the parking brake, block the rear wheels, and raise the front of the vehicle. Make sure it is securely supported.

5. Remove the splash shield.

6. Disconnect the A/T clutch pressure control solenoid valve B connector.

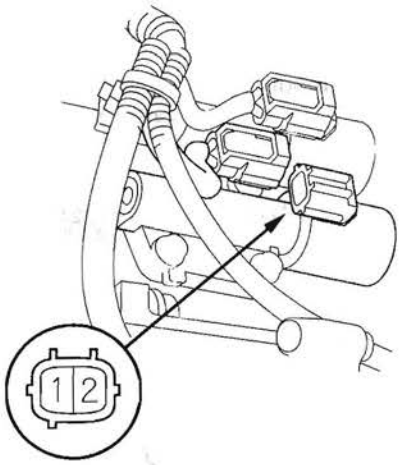

7. Measure the A/T clutch pressure control solenoid valve B resistance at the connector terminals.

   Standard: 3—10 Ω

   - If the resistance is out of standard, replace A/T clutch pressure control solenoid valve B (see page 14-232).
   - If the resistance is within the standard, go to step 8.

8. Connect a jumper wire from the negative battery terminal to the solenoid valve B connector terminal No. 2, and connect another jumper wire from the positive battery terminal to the connector terminal No. 1.

   - If a clicking sound is heard, the valve is OK. Reconnect the connector, and install the splash shield.
   - If no clicking sound is heard, go to step 9.

9. Disconnect the connector from A/T clutch pressure control solenoid valve C.

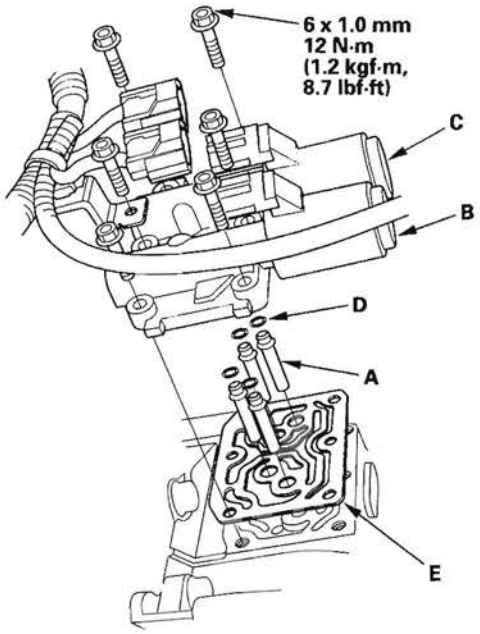

10. Remove A/T clutch pressure control solenoid valve B and C.

11. Remove the ATF joint pipes (A), O-rings (D), and gasket (E).

12. Check the fluid passage of the solenoid valve for contamination.

13. Connect a jumper wire from the negative battery terminal to A/T clutch pressure control solenoid valve B connector terminal No. 2, and connect another jumper wire from the positive battery terminal to the connector terminal No. 1. Make sure A/T clutch pressure control solenoid valve B moves.

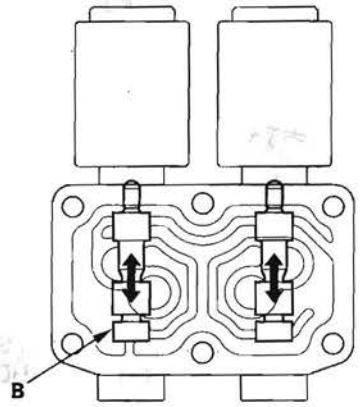

14. Disconnect one of the jumper wires and check valve movement at the fluid passage in valve body mounting surface. If the valve binds or moves sluggishly, or if the solenoid valve does not operate, replace A/T clutch pressure control solenoid valve B and C.

15. Clean the mounting surface and fluid passage of the solenoid valve body and transmission housing.

16. Install the new gasket on the transmission housing, and install the ATF joint pipes.

17. Install the new O-rings over the ATF joint pipes.

18. Install A/T clutch pressure control solenoid valve B and C.

19. Check the connectors for rust, dirt, or oil, clean or repair if necessary, then connect the connectors securely.

20. Install the splash shield.

A/T Clutch Pressure Control Solenoid Valve C Test

1. Connect the HDS to the DLC (A).

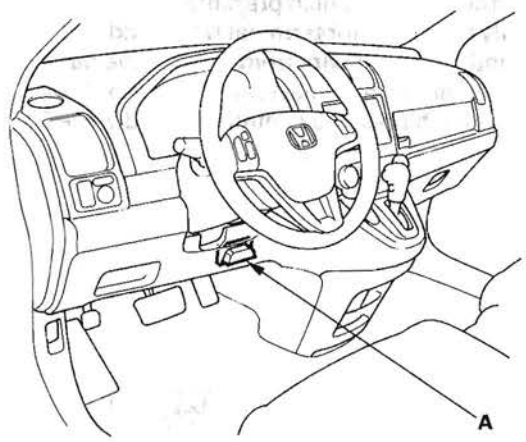

2. Choose Clutch Pressure Control (Linear) Solenoid C in the Miscellaneous Test Menu on the HDS.

   NOTE: If the HDS does not communicate with the PCM, troubleshoot the DLC circuit (see page 11-197).

3. Test A/T clutch pressure control solenoid valve C with the HDS.

   - If the valve tests OK, the test is complete. Disconnect the HDS.
   - If the valve does not test OK, follow the instructions on the HDS.
   - If the valve does not test OK, and the HDS does not determine the cause, go to step 4.

4. Raise the vehicle on a lift, or apply the parking brake, block the rear wheels, and raise the front of the vehicle. Make sure it is securely supported.

5. Remove the splash shield.

6. Disconnect the A/T clutch pressure control solenoid valve C connector.

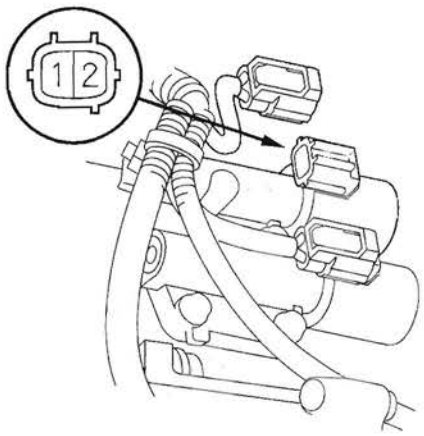

7. Measure the A/T clutch pressure control solenoid valve C resistance at the connector terminals.

   Standard: 3—10 Ω

   - If the resistance is out of standard, replace A/T clutch pressure control solenoid valve C (see page 14-232).
   - If the resistance is within the standard, go to step 8.

8. Connect a jumper wire from the negative battery terminal to the solenoid valve C connector terminal No. 2, and connect another jumper wire from the positive battery terminal to the connector terminal No. 1.

   - If a clicking sound is heard, the valve is OK. Reconnect the connector, and install the splash shield.
   - If no clicking sound is heard, go to step 9.

9. Disconnect the connector from A/T clutch pressure control solenoid valve B.

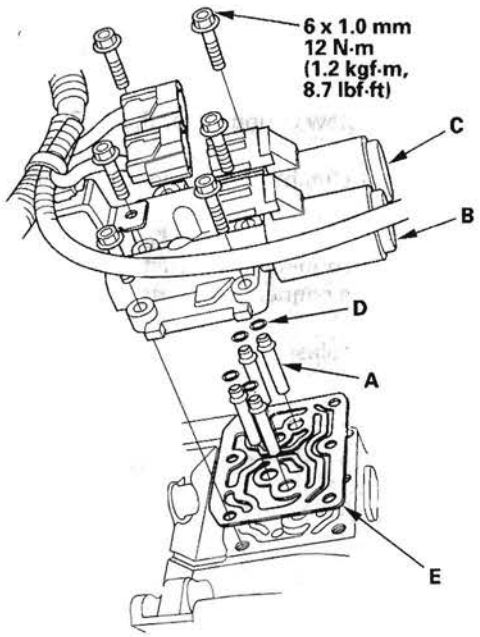

10. Remove A/T clutch pressure control solenoid valve B and C.

11. Remove the ATF joint pipes (A), O-rings (D), and gasket (E).

12. Check the fluid passage of the solenoid valve for contamination.

13. Connect a jumper wire from the negative battery terminal to A/T clutch pressure control solenoid valve C connector terminal No. 2, and connect another jumper wire from the positive battery terminal to the connector terminal No. 1. Make sure A/T clutch pressure control solenoid valve C moves.

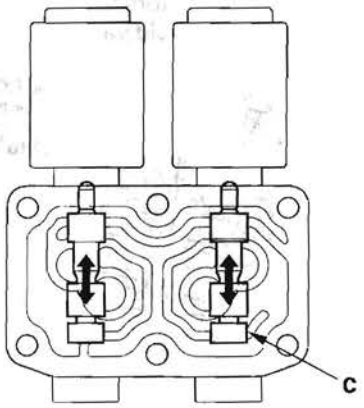

14. Disconnect one of the jumper wires and check valve movement at the fluid passage in valve body mounting surface. If the valve binds or moves sluggishly, or if the solenoid valve does not operate, replace A/T clutch pressure control solenoid valve B and C.

15. Clean the mounting surface and fluid passage of the solenoid valve body and transmission housing.

16. Install the new gasket on the transmission housing, and install the ATF joint pipes.

17. Install the new O-rings over the ATF joint pipes.

18. Install A/T clutch pressure control solenoid valve B and C.

19. Check the connectors for rust, dirt, or oil, clean or repair if necessary, then connect the connectors securely.

20. Install the splash shield.

A/T Clutch Pressure Control Solenoid Valve B and C Replacement

1. Raise the vehicle on a lift, or apply the parking brake, block the rear wheels, and raise the front of the vehicle. Make sure it is securely supported.
2. Remove the splash shield.
3. Disconnect the connectors from A/T clutch pressure control solenoid valve B and C.

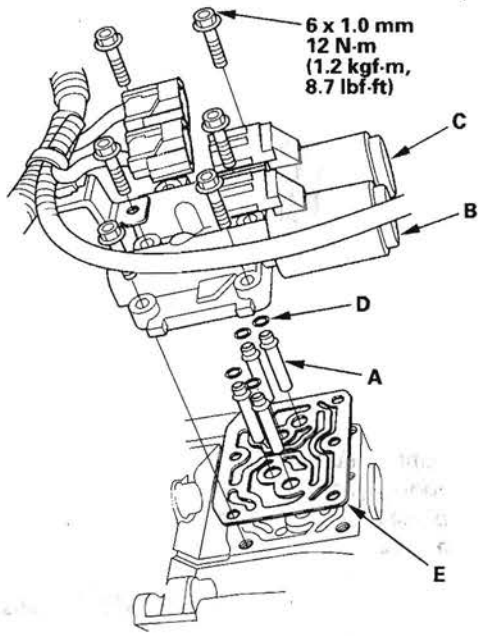

4. Remove A/T clutch pressure control solenoid valve B and C.
5. Remove the ATF joint pipes (A), O-rings (D), and gasket (E).
6. Clean the mounting surface and fluid passage of the solenoid valve body and transmission housing.
7. Install the new gasket on the transmission housing, and install the ATF joint pipes.
8. Install the new O-rings over the ATF joint pipes.
9. Install A/T clutch pressure control solenoid valve B and C.
10. Check the connectors for rust, dirt, or oil, then connect the connectors securely.
11. Install the splash shield.

Input Shaft (Mainshaft) Speed Sensor Replacement

1. Remove the air cleaner housing and intake air duct.
2. Disconnect the input shaft (mainshaft) speed sensor connector, and remove the input shaft (mainshaft) speed sensor (A).

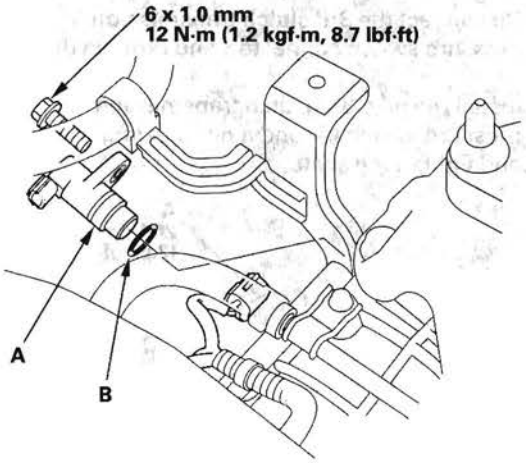

3. Install the new O-ring (B) on the new input shaft (mainshaft) speed sensor, then install the input shaft (mainshaft) speed sensor in the transmission housing.
4. Check the connector for rust, dirt, or oil, then connect the connector securely.
5. Install the intake air duct and air cleaner housing.

Output Shaft (Countershaft) Speed Sensor Replacement

1. Remove the air cleaner housing and intake air duct.
2. Disconnect the output shaft (countershaft) speed sensor connector, and remove the output shaft (countershaft) speed sensor (A) and sensor washer (B).

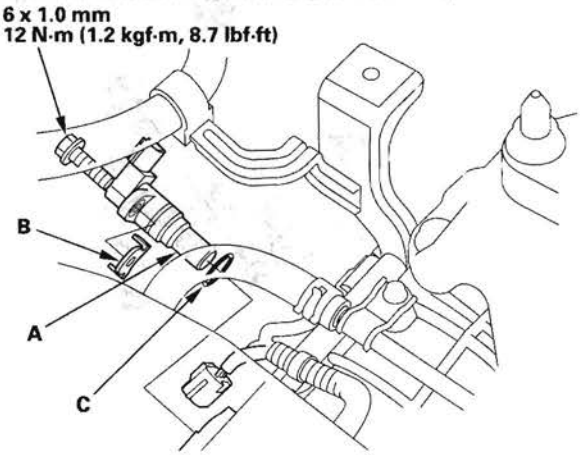

3. Install the new O-ring (C) on the new output shaft (countershaft) speed sensor, then install the output shaft (countershaft) speed sensor and sensor washer in the transmission housing.
4. Check the connector for rust, dirt, or oil, then connect the connector securely.
5. Install the intake air duct and air cleaner housing.

2nd Clutch Transmission Fluid Pressure Switch Replacement

1. Remove the air cleaner housing and intake air duct.
2. Disconnect the 2nd clutch transmission fluid pressure switch connector, and remove the switch.
3. Install the new 2nd clutch transmission fluid pressure switch (A) and a new sealing washer (B), and tighten the switch.

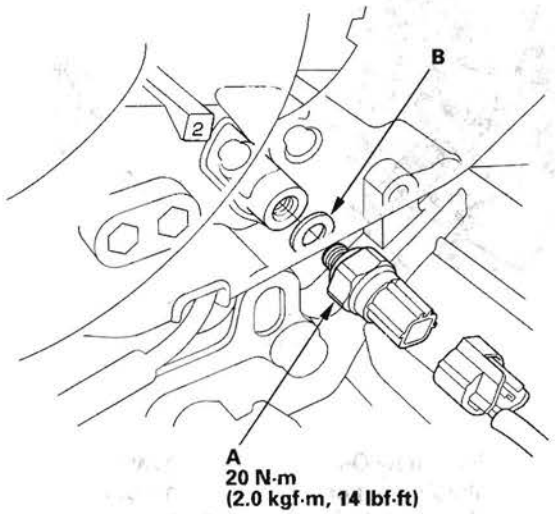

4. Make sure there is no water, oil, dust, or foreign particles inside the connector.
5. Connect the connector securely.
6. Install the intake air duct and air cleaner housing.

3rd Clutch Transmission Fluid Pressure Switch Replacement

1. Raise the vehicle up on a lift, or apply the parking brake, block the rear wheels, and raise the front of the vehicle. Make sure it is securely supported.
2. Remove the splash shield.
3. Disconnect the 3rd clutch transmission fluid pressure switch connector, and remove the switch.
4. Install the new 3rd clutch transmission fluid pressure switch (A) and a new sealing washer (B), and tighten the switch.

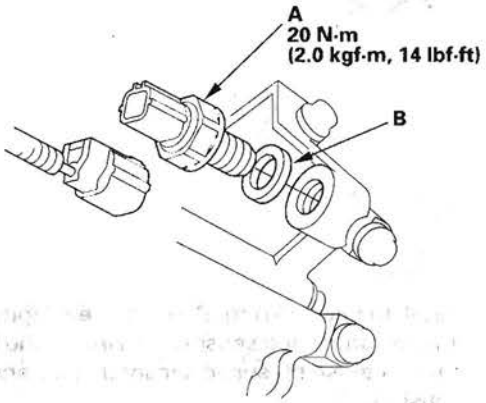

5. Make sure there is no water, oil, dust, or foreign particles inside the connector.
6. Connect the connector securely.
7. Install the splash shield.

ATF Temperature Sensor Test/Replacement

1. Raise the vehicle on a lift, or apply the parking brake, block the rear wheels, and raise the front of the vehicle. Make sure it is securely supported.
2. Remove the splash shield.
3. Disconnect the shift solenoid harness connector.

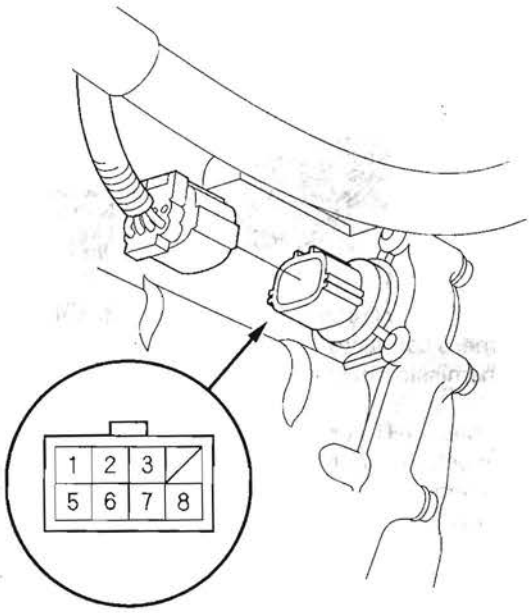

Terminal side of male terminals

4. Measure the ATF temperature sensor resistance between shift solenoid harness connector terminals No. 6 and No. 7.

   Standard: 50 Ω — 25 kΩ

5. If the resistance is out of standard, replace the ATF temperature sensor and solenoid harness, then go to step 6. The ATF temperature sensor is not available separately from the solenoid harness. If the measurement is within the standard, connect the connector securely, and install the splash shield.
6. Remove the drain plug (A), and drain the transmission fluid (ATF).

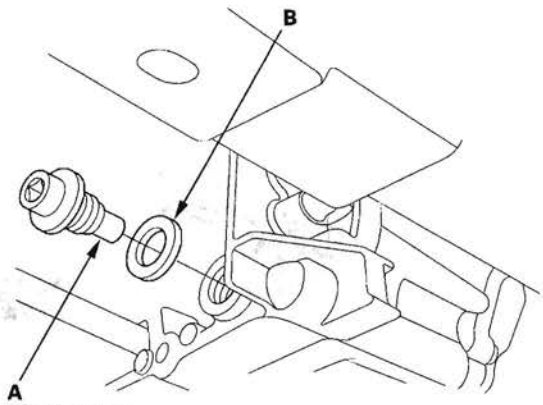

18 x 1.5 mm
49 N·m (5.0 kgf·m, 36 lbf·ft)

7. Reinstall the drain plug with the new sealing washer (B).
8. Make sure you have the audio system or the navigation system (if equipped) anti-theft code, and write down the audio presets.
9. Disconnect the negative terminal from the battery, then disconnect the positive terminal.
10. Remove the battery hold-down bracket, and remove the battery cover, battery, and battery tray.
11. Remove the battery base.
12. Remove the air cleaner housing and intake air duct.

(cont'd)

ATF Temperature Sensor Test/Replacement (cont'd)

13. Remove the ATF dipstick, and remove the bolts securing the ATF cooler line (A).

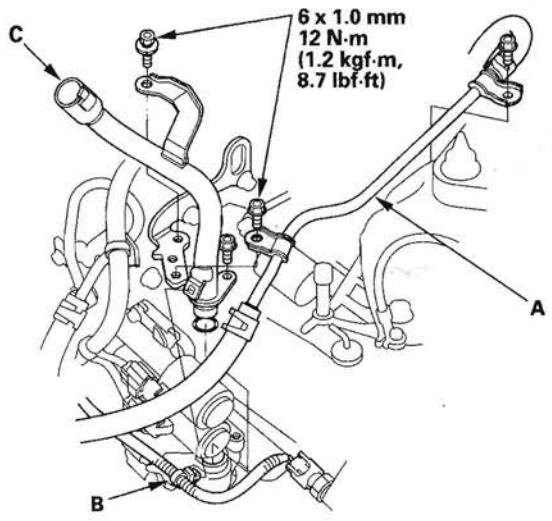

14. Remove the harness clamp (B), and remove the ATF dipstick guide tube (C).

15. Remove the shift solenoid valve cover (A), dowel pins (B), and gasket (C).

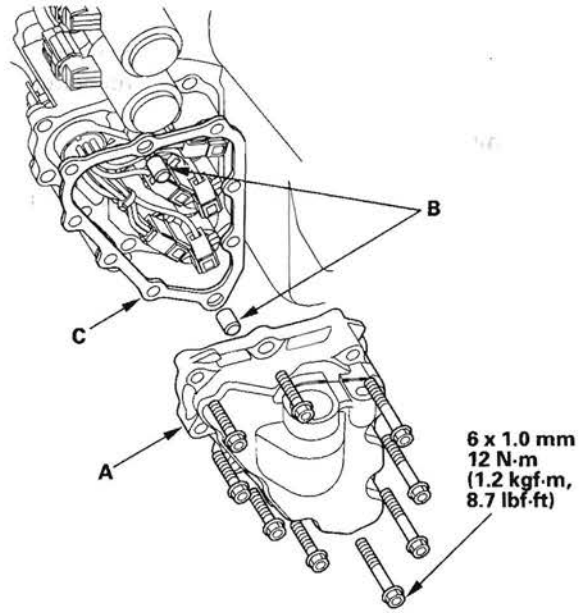

16. Remove the shift solenoid harness connector (A), and replace it.

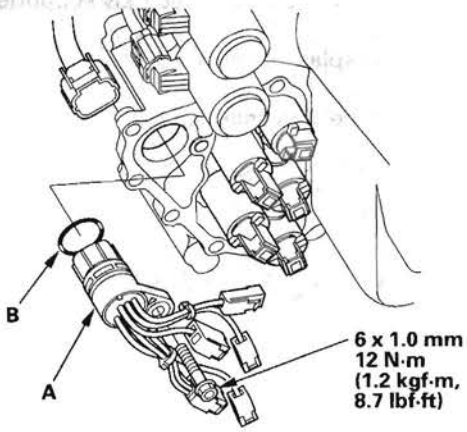

17. Install a new O-ring (B) on the shift solenoid harness connector, and install the connector in the transmission housing.

18. Connect WHT harnesses and ORN harness connector to shift solenoid valve D. The ATF temperature sensor is assembled in the connector with WHT harnesses.

19. Connect the harness terminals to the solenoids:

    - RED wire connector to shift solenoid valve E.
    - GRN wire connector to shift solenoid valve C.
    - ORN wire connector to shift solenoid valve B.
    - BLU wire connector to shift solenoid valve A.

20. Install the shift solenoid valve cover, dowel pins, and a new gasket.

21. Install the new O-ring on the ATF dipstick guide tube, and install the guide tube then secure it with the bolts.

22. Check the connector for rust, dirt, or oil, then connect the connector securely. Install the harness clamp in its clamp bracket on the ATF dipstick guide tube.

23. Secure the ATF cooler line with the bolts.

24. Refill the transmission with ATF (see step 5 on page 14-239).
25. Install the intake air duct and air cleaner housing.
26. Install the battery base.
27. Install the battery tray, battery, battery cover, and battery hold-down bracket, then connect battery terminals.
28. Install the splash shield.
29. Enter the audio system or the navigation system (if equipped) anti-theft code, then enter the audio presets, and set the clock.

ATF Level Check

NOTE: Keep all foreign particles out of the transmission.

1. Park the vehicle on the level ground.
2. Warm up the engine to normal operating temperature (the radiator fan comes on), and turn the engine off. Do not allow the engine to warm up longer than the time it takes for the radiator fan to come on twice.

   NOTE: Check the fluid level within 60—90 seconds after turning the engine off. Higher fluid level may be indicated if the radiator fan comes on twice or more.
3. Remove the dipstick (yellow loop) (A) from the dipstick guide tube, and wipe it with a clean cloth.

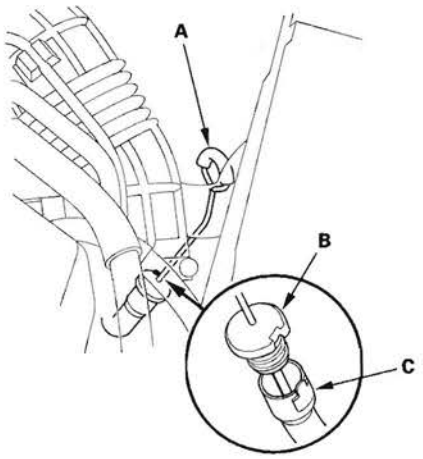

4. Insert the dipstick into the guide tube aligning the notch (B) with the guide tab (C).
5. Remove the dipstick and check the fluid level. It should be between the upper mark (A) and lower mark (B).

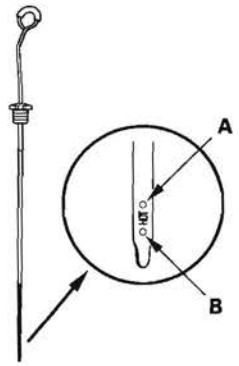

6. If the level is below the lower mark, check for fluid leaks at the transmission, and hose and line joints. If a problem is found, fix it before filling the transmission.

   NOTE: If the vehicle is driven when the ATF level is below the lower mark:
   - Transmission damage will result.
   - Vehicle does not move in any gear.
   - Vehicle accelerates poorly, and flares when starting off in the D and R positions.
   - The engine vibrates at idle.
7. If the level is above the upper mark, drain the ATF to proper level (see step 3 on page 14-239).

   NOTE: If the vehicle is driven when the ATF level is above the upper mark, the vehicle may creep forward while in the N position, or have a shifting problem.
8. If necessary, fill the transmission with ATF through the dipstick guide tube opening (A) to bring the fluid level midway between the upper mark and lower mark of the dipstick. Do not fill past the upper mark. Always use Honda ATF-Z1 Automatic Transmission Fluid (ATF). Using a non-Honda ATF can affect shift quality.

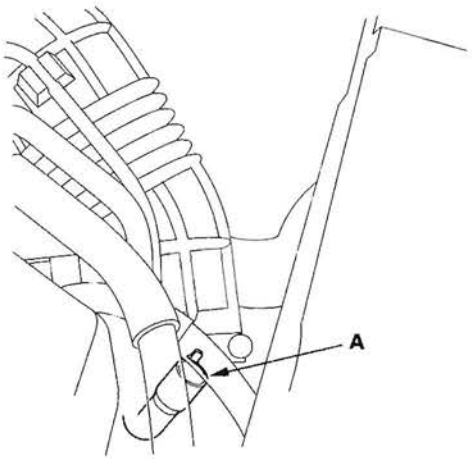

9. Insert the dipstick into the guide tube aligning the notch with the guide tab.

ATF Replacement

NOTE: Keep all foreign particles out of the transmission.

1. Park the vehicle on the level ground.
2. Warm up the engine to normal operating temperature (the radiator fan comes on), and turn the engine off.
3. Remove the drain plug (A), and drain the automatic transmission fluid (ATF).

   NOTE: If a cooler cleaning is done, refer to ATF Cooler Cleaning (see page 14-268).

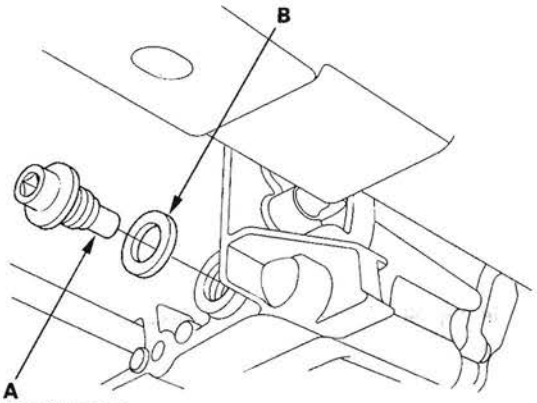

A
18 x 1.5 mm
49 N·m (5.0 kgf·m, 36 lbf·ft)

4. Reinstall the drain plug with a new sealing washer (B).
5. Refill the transmission through the dipstick guide tube opening (A) with the recommended fluid. Always use Honda ATF-Z1 Automatic Transmission Fluid (ATF). Using a non-Honda ATF can affect shift quality.

Automatic Transmission Fluid Capacity:
4WD Model:
2.5 L (2.6 US qt) at change
7.2 L (7.6 US qt) at overhaul
2WD Model:
2.6 L (2.7 US qt) at change
7.0 L (7.4 US qt) at overhaul

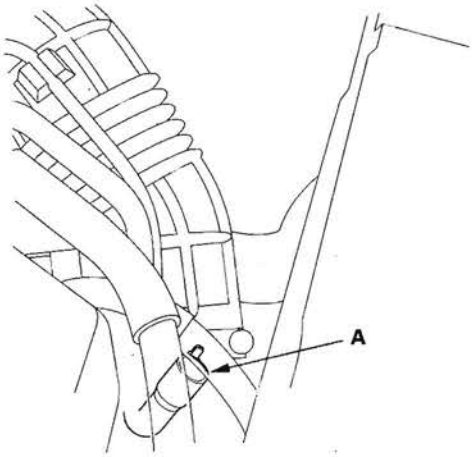

(cont'd)

ATF Replacement (cont'd)

6. Insert the dipstick (A) into the guide tube (B) aligning the notch (C) with the guide tab (D).

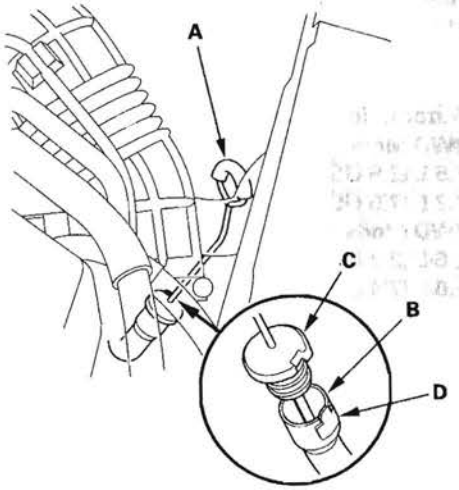

7. Remove the dipstick (A).

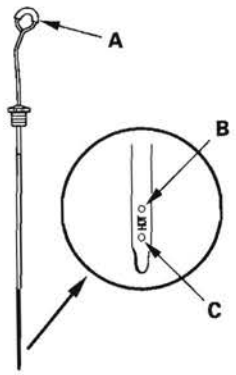

8. Check that the fluid level is between the upper mark (B) and lower mark (C) on the dipstick.

9. If the maintenance minder required replacement of the ATF, reset the maintenance minder (see page 3-6), and this procedure is complete. If the maintenance minder did not require replacement of the ATF, go to step 10 and reset the ATF life with the HDS.

10. Connect the HDS to the DLC (A), and go to the BODY ELECTRICAL. If the HDS does not communicate with the PCM, troubleshoot the DLC circuit (see page 11-197).

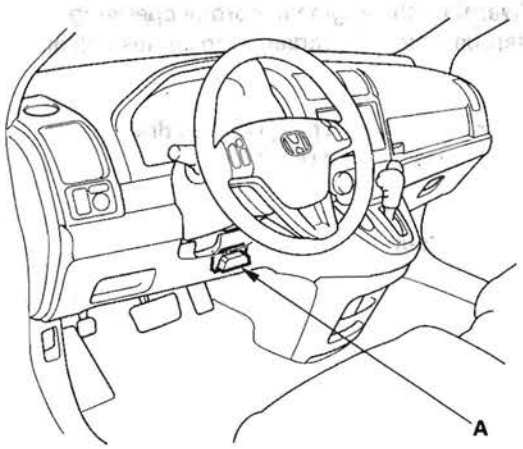

11. Select ADJUSTMENT in the GAUGES MENU with the HDS.

12. Select RESET in the MAINTENANCE MINDER with the HDS.

13. Select MAINTENANCE SUB ITEM 3 RESET to reset the ATF life with the HDS.

Transfer Assembly Inspection

1. Shift the transmission into the N position.
2. Raise the vehicle on a lift, and make sure it is supported securely.
3. Make a reference mark (A) across the propeller shaft (B) and the transfer companion flange (C).

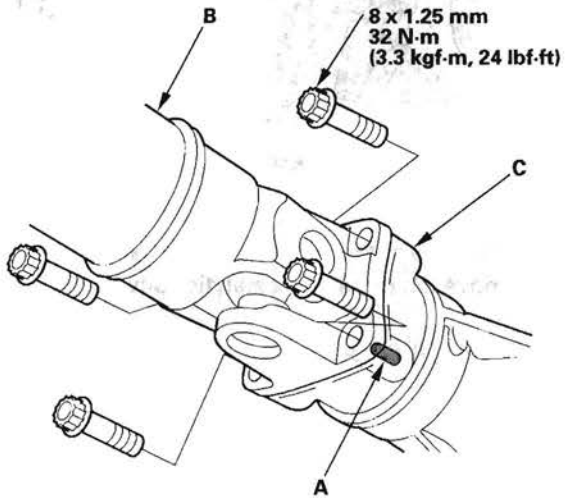

4. Separate the propeller shaft from the transfer assembly.
5. Set a dial indicator (A) on the transfer companion flange (B), and measure the transfer gear backlash.

Standard: 0.06—0.16 mm (0.002—0.006 in.)

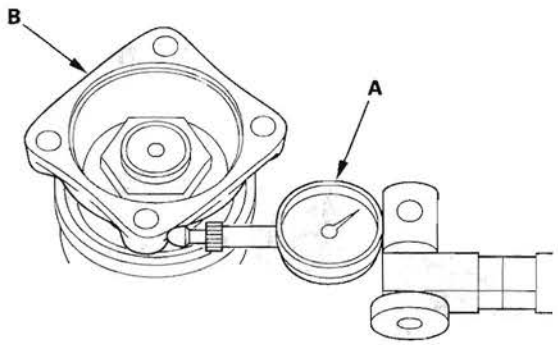

6. If the measurement is out of standard, remove the transfer assembly, and adjust the transfer gear backlash (see page 14-409).
7. Check for fluid leaks between the mating faces of the transfer assembly and transmission.
8. If there is leak, remove the transfer assembly, and replace the O-ring. Also check for fluid leaks between the mating surfaces of the transfer housing and transfer cover. If there is a leak, remove the transfer cover, and replace the O-ring.
9. Check for leaks between the transfer companion flange and transfer oil seal.
10. If there is a leak, remove the transfer assembly from the transmission, and replace the transfer oil seal and O-ring on the transfer output shaft (hypoid gear). If oil seal and O-ring replacement is required, you will need to check and adjust the transfer gear tooth contact, transfer gear backlash, the tapered roller bearing starting torque, and the total starting torque (see page 14-409). Do not replace the oil seal with the transfer assembly on the transmission.

Transfer Assembly Removal

1. Shift the transmission into the N position.
2. Raise the vehicle on a lift, and make sure it is supported securely.
3. Remove the drain plug (A), and drain the automatic transmission fluid (ATF).

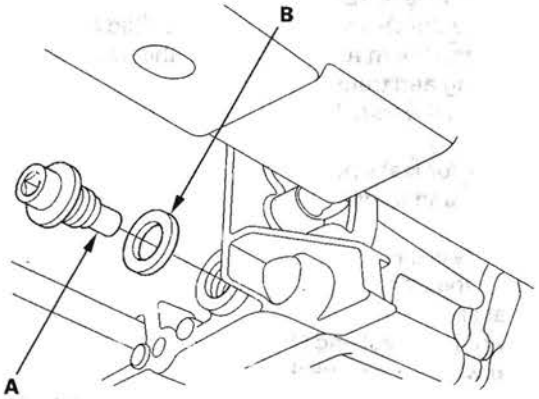

A
18 x 1.5 mm
49 N·m (5.0 kgf·m, 36 lbf·ft)

4. Reinstall the drain plug with a new sealing washer (B).
5. Disconnect the A/F sensor connector and the secondary heated oxygen sensor connector.

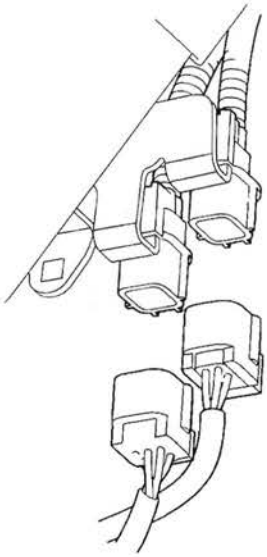

6. Remove the sensor harnesses from the harness clamps.

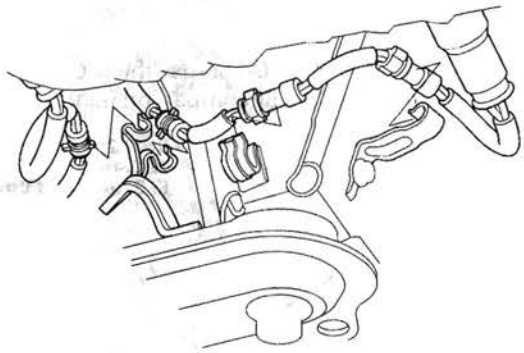

7. Remove the three-way catalytic converter.

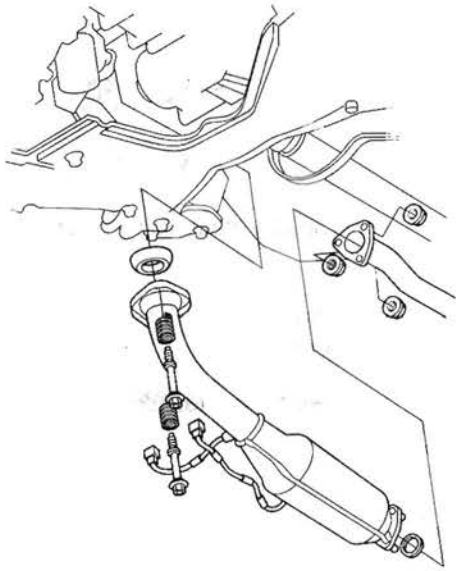

8. Make a reference mark (A) across the propeller shaft (B) and the transfer companion flange (C).

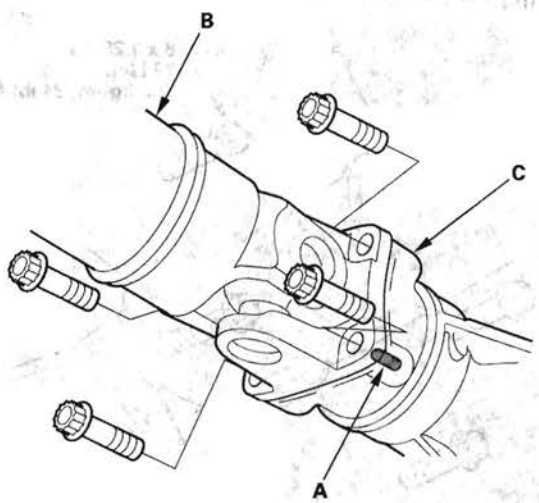

9. Separate the propeller shaft from the transfer companion flange.

10. Remove the transfer assembly mounting bolts (A) (4), and pull out the bolt (B) to the limit of travel.

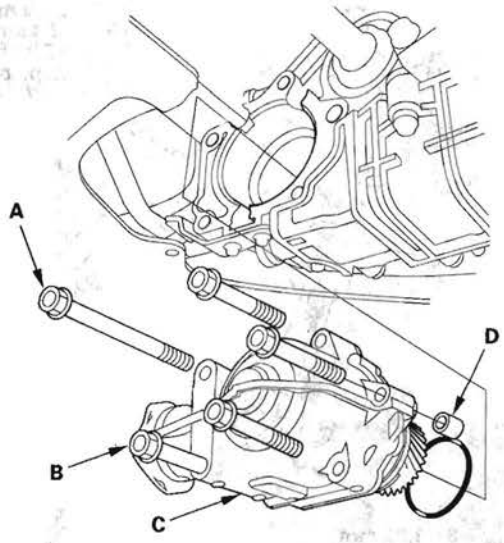

11. Remove the transfer assembly (C) and dowel pin (D) from the transmission.

Transfer Assembly Installation

1. Clean the areas where the transfer assembly contacts the transmission with solvent, and dry with compressed air. Then apply transmission fluid to the contact area.
2. Install the new O-ring (A) on the transfer assembly (B).

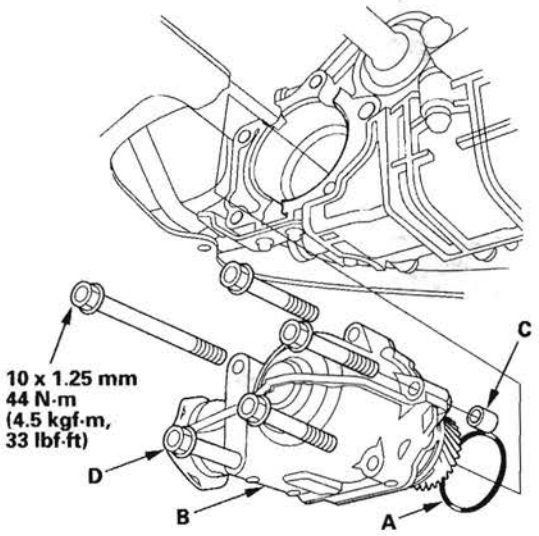

3. Install the dowel pin (C) in the transfer housing.
4. Install the one bolt (D) part-way in the rear lower of the transfer housing, and install the transfer assembly on the transmission.
5. Install the propeller shaft (A) to the transfer companion flange (B) by aligning the reference mark (C).

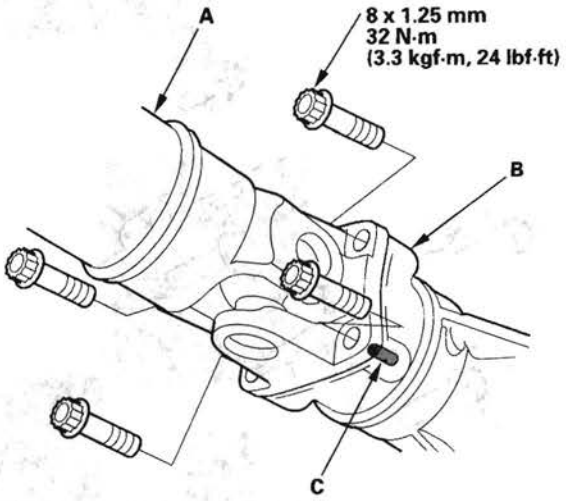

6. Install the three-way catalytic converter (A) with the bolts, the new self-locking nuts, and new gaskets (B) (C).

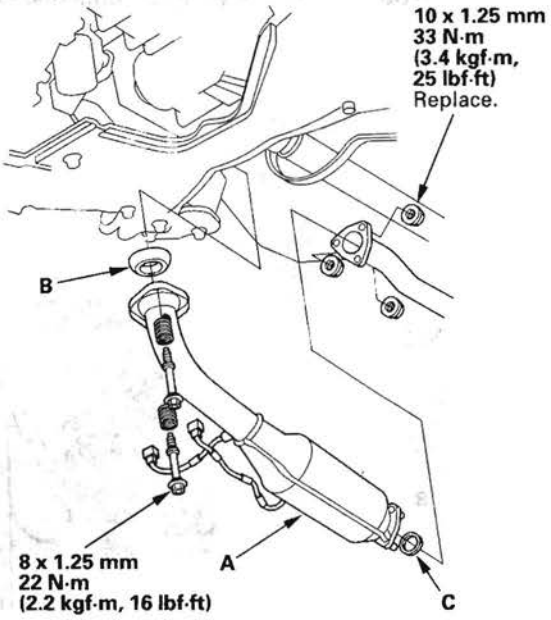

7. Connect the A/F sensor connector and the secondary heated oxygen sensor connector.

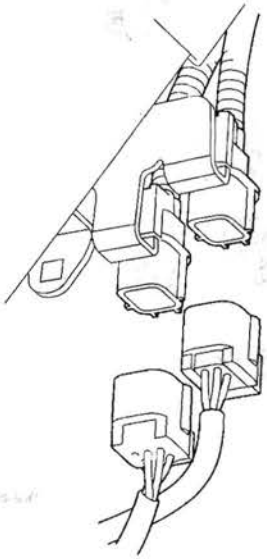

8. Install the sensor harnesses in the harness clamps.

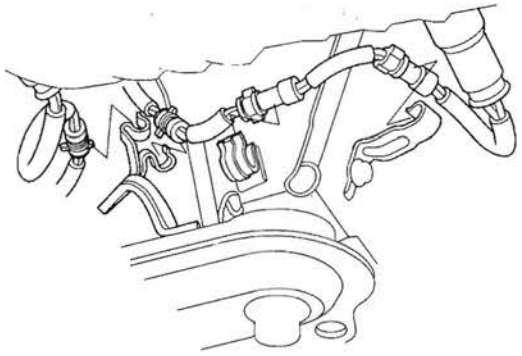

9. Refill the transmission with ATF (see step 5 on page 14-239).

Transmission Removal

Special Tools Required
- Engine hanger adapter VSB02C000015
- CR-V engine hanger adapter VSB02C000032
- Front subframe adapter VSB02C000016
- Engine support hanger, A and Reds AAR-T-12566

These special tools are available through the Honda Tool and Equipment Program 1-888-424-6857.

NOTE:
- Use fender covers to avoid damaging painted surfaces.
- Special tool engine hanger must be used with the side engine mount installed.

1. Make sure you have the audio system or the navigation system (if equipped) anti-theft code, and write down the audio presets.
2. Remove the front bulkhead cover.
3. Make sure the ignition switch is OFF. Disconnect the negative cable from the battery, then disconnect the positive cable.
4. Remove the battery hold-down bracket, and remove the battery cover, battery, and battery tray.
5. Remove the intake air duct and air cleaner housing.
6. Remove the battery base.
7. Raise the vehicle on a lift, and make sure it is securely supported.
8. Remove the splash shield.
9. Remove the drain plug (A), and drain the transmission fluid (ATF).

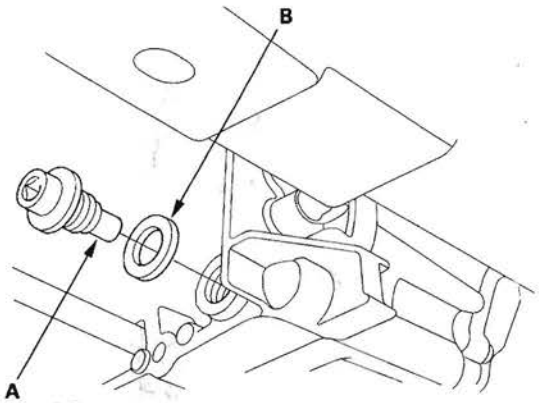

A
18 x 1.5 mm
49 N·m (5.0 kgf·m, 36 lbf·ft)

10. Reinstall the drain plug with a new sealing washer (B).
11. Fix the hood in the vertical position.
12. Remove the harness clamp from the clamp bracket, and remove the air cleaner housing bracket.

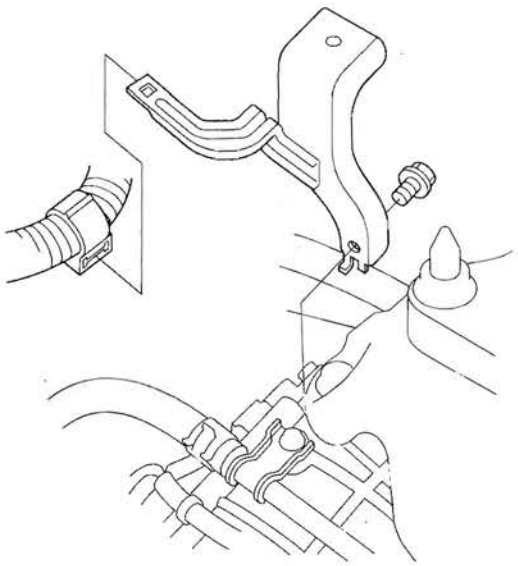

13. Disconnect the A/T clutch pressure control solenoid valve A connector (A) and 2nd clutch transmission fluid pressure switch connector (B), and remove the harness clamps (C) from the clamp brackets (D).

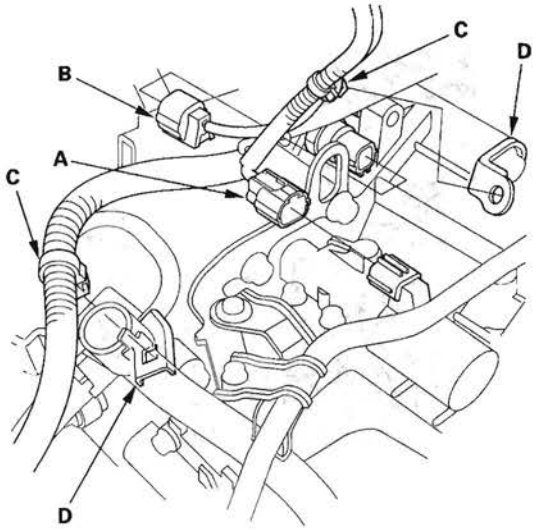

14. Disconnect the transmission range switch connector (A), and remove the connector from its bracket.

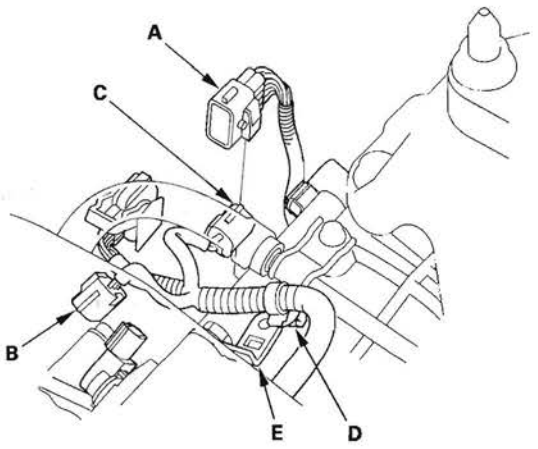

15. Disconnect the output shaft (countershaft) speed sensor connector (B) and input shaft (mainshaft) speed sensor connector (C), and remove the harness clamp (D) from the clamp bracket (E).

16. Disconnect the 3rd clutch transmission fluid pressure switch connector (A), and remove the harness clamp (B) from its bracket (C).

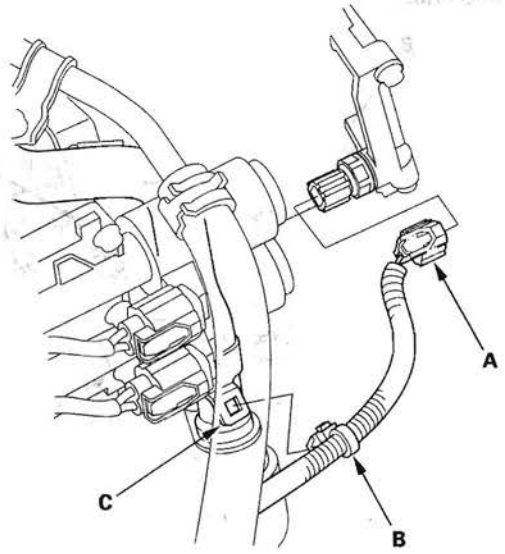

17. Disconnect the A/T clutch pressure control solenoid valve B connector (A), A/T clutch pressure control solenoid valve C connector (B), and shift solenoid harness connector (C), then remove the harness clamp (D) from the clamp bracket (E).

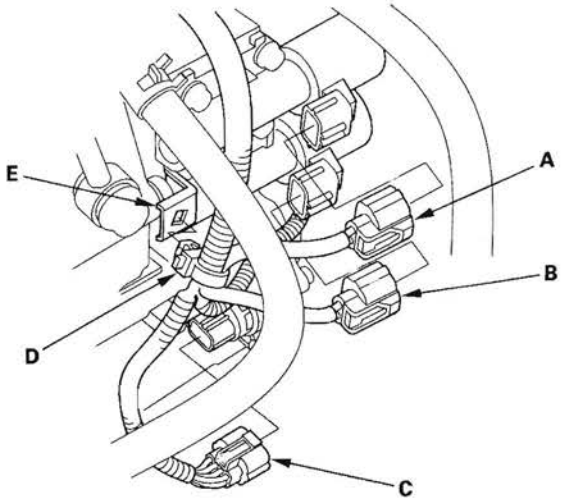

(cont'd)

Transmission Removal (cont'd)

18. Disconnect the ATF cooler hoses (A) from the ATF lines (B). Turn the end of the ATF cooler hoses up to prevent ATF from flowing out, then plug the hoses and lines.

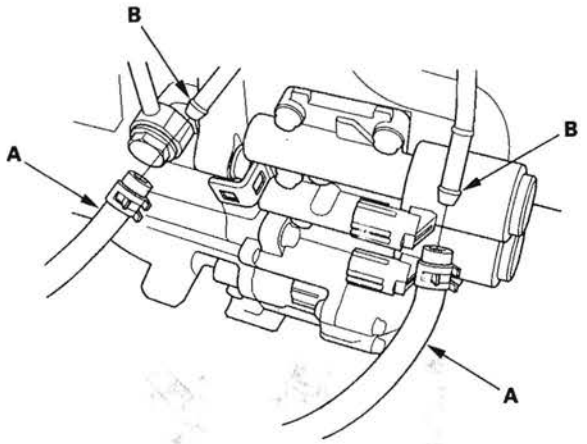

19. Attach the engine hanger adapater (VSB02C000015) to the threaded hole in the cylinder head.

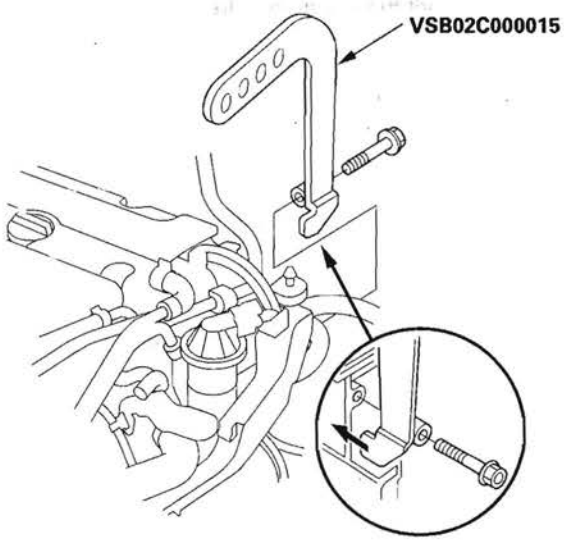

20. Remove both lids (A) for the front damper flange nuts from the cowl cover. Position the engine hanger adapters (VSB02C000032) over the damper flange nuts.

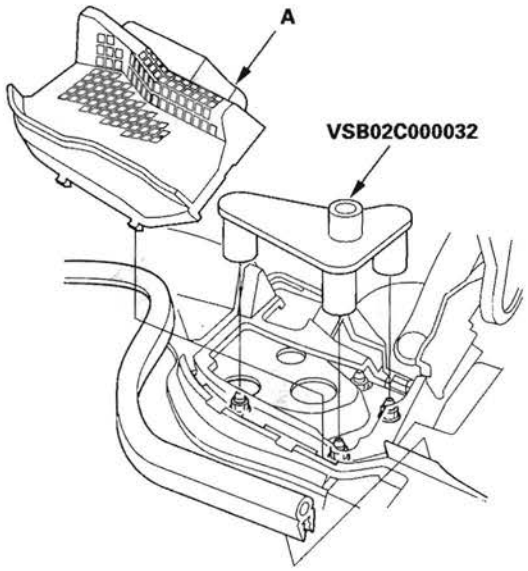

21. Carefully position the engine support hanger (AAR-T-12566) on the vehicle, and attach the hook (A) to the engine hanger adapter (VSB02C000015). Tighten the wing nut (B) by hand, and lift and support the engine.

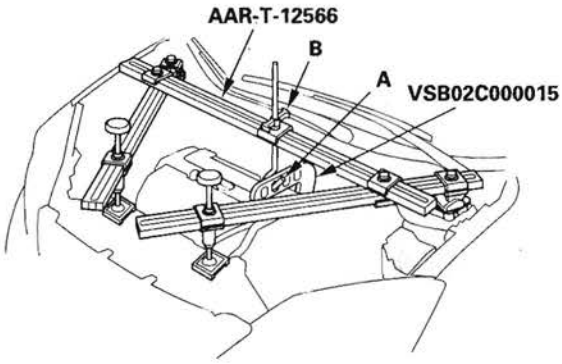

22. Insert a 6 mm Allen wrench (A) in the top of the ball joint pin (B), and remove the nut (C), then separate the stabilizer link (D) from the stabilizer (E). Repeat this for the other stabilizer link.

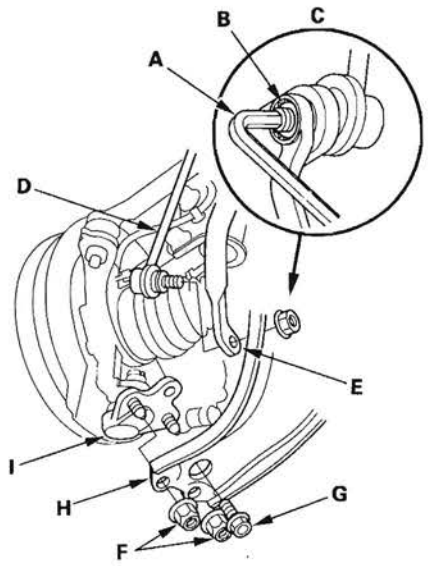

23. Remove the nuts (F) and bolt (G) securing the lower arm (H) and ball joint (I), and separate the lower arms from the ball joints.

24. Disconnect the A/F sensor connector and the secondary heated oxygen sensor connector.

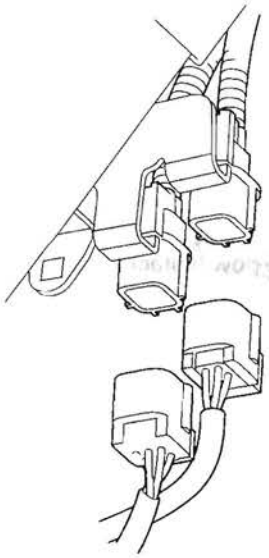

25. Remove the sensor harnesses from the harness clamps.

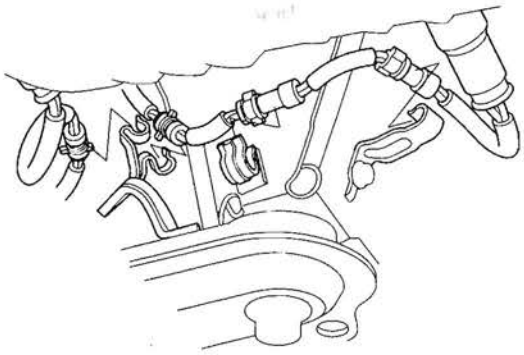

26. Remove the three-way catalytic converter.

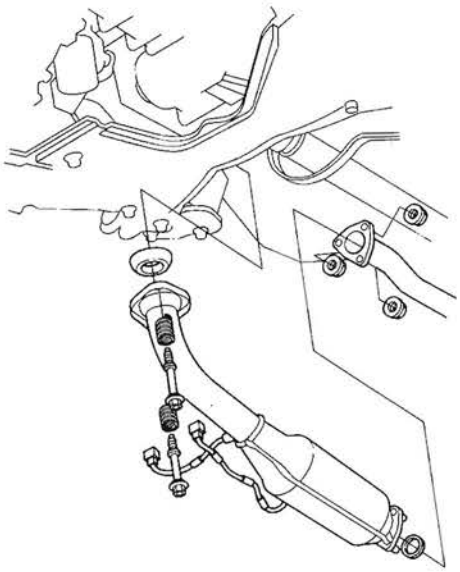

(cont'd)

Transmission Removal (cont'd)

27. For 4WD model: Make a reference mark (A) across the propeller shaft (B) and the transfer companion flange (C). Separate the propeller shaft from the transfer companion flange.

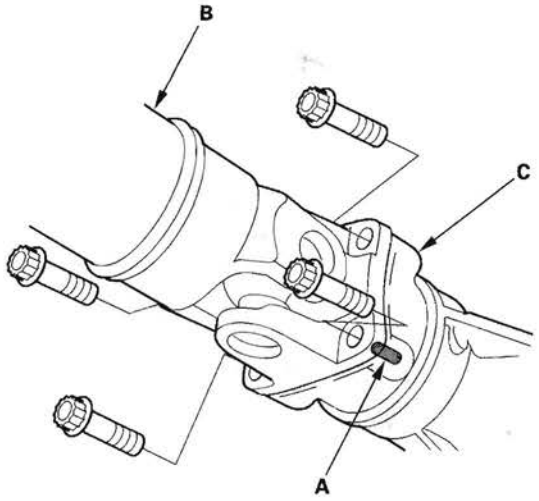

28. Remove the steering gearbox bracket mounting bolts.

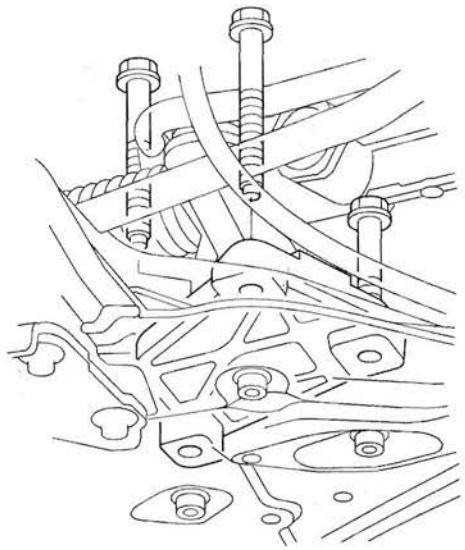

29. Remove the steering gearbox bracket mounting bolts.

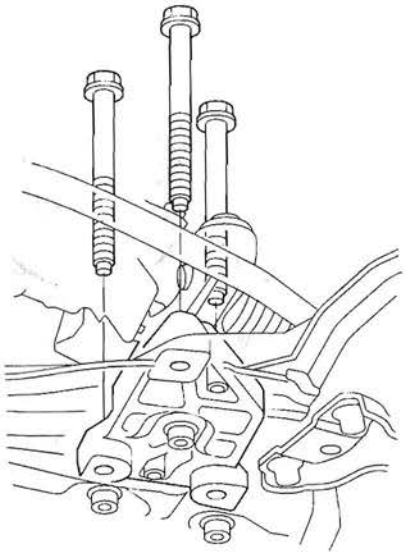

30. Remove the bolt (A) securing the power steering fluid line clamp.

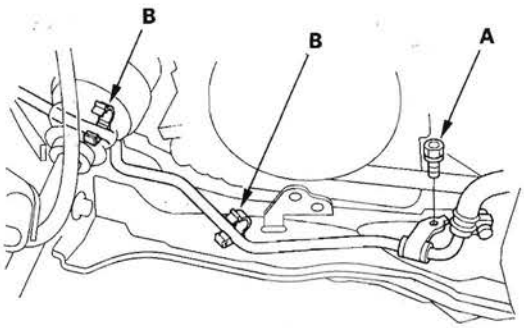

31. Remove the power steering fluid line from the line clamps (B).

32. Remove the bolt securing the ATF filter on the front subframe.

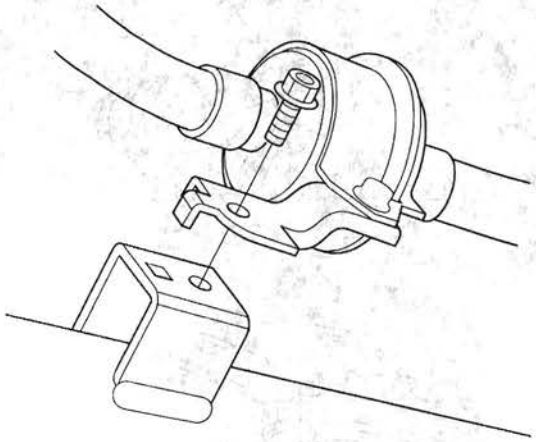

33. Remove the lower torque rod bolts.

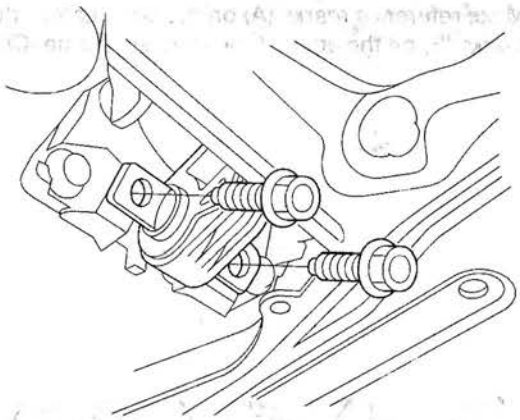

34. Remove the shift cable cover (A).

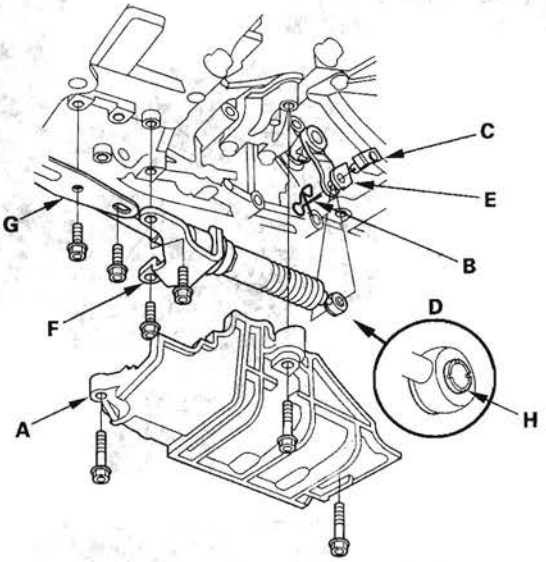

35. Remove the spring clip (B) and control pin (C), and separate the shift cable end (D) from the control lever (E).

36. Remove the bolts securing the shift cable brackets (F) (G). Do not bend the shift cable excessively.

37. Check synthetic resin bushing (H) in the shift cable end for a proper fit and wear. If the bushing is loose or worn, replace the shift cable (see page 14-284).

(cont'd)

Transmission Removal (cont'd)

38. Remove the shift cable holder bracket from the transmission.

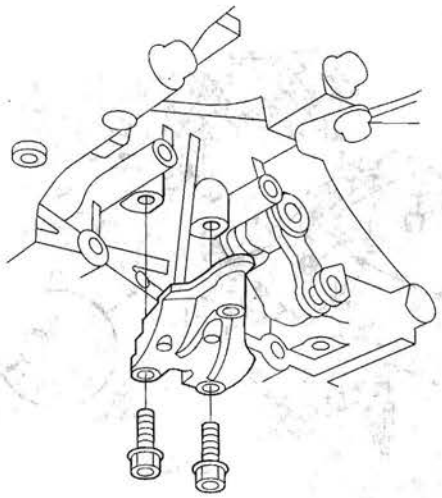

39. For 4WD model: Remove the propeller shaft protector.

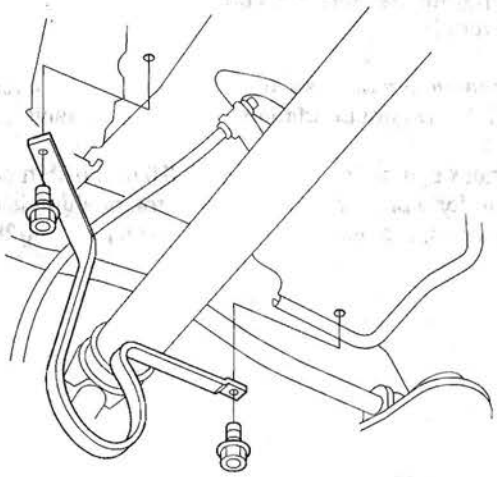

40. Remove both mid-bracket bolts.

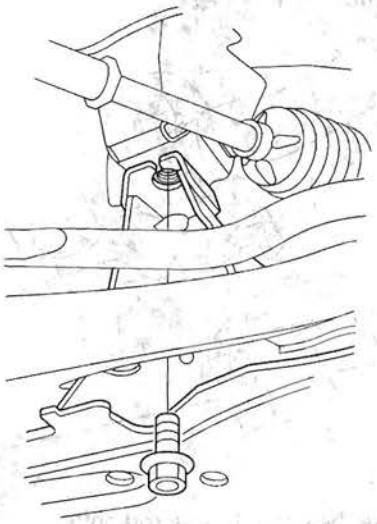

41. Make reference marks (A) on the body across the marks (B) on the edge of the front subframe (C).

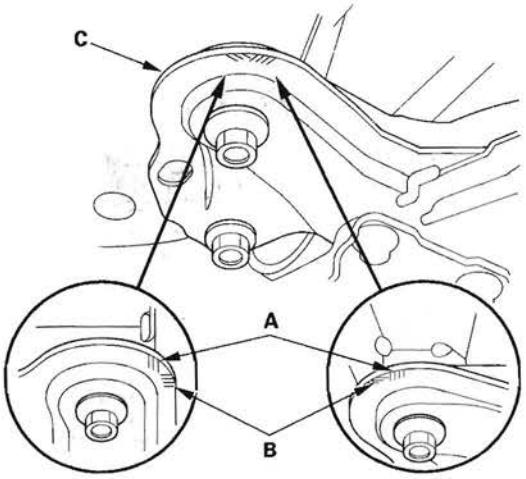

42. Attach the front subframe adapter (VSB02C000016) to the subframe by looping the strap (A) over the front of the subframe, then secure the strap with the stop (B), then tighten the wing nut (C).

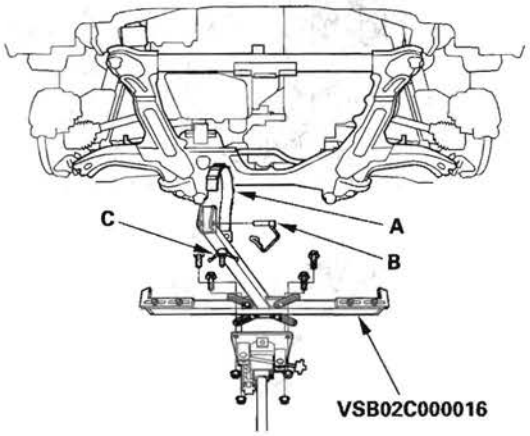

43. Raise the jack and line up the slots in the arms with the bolt holes on the corner of the jack base, then tighten the bolts.

44. Remove the six bolts securing the front subframe, and lower the subframe.

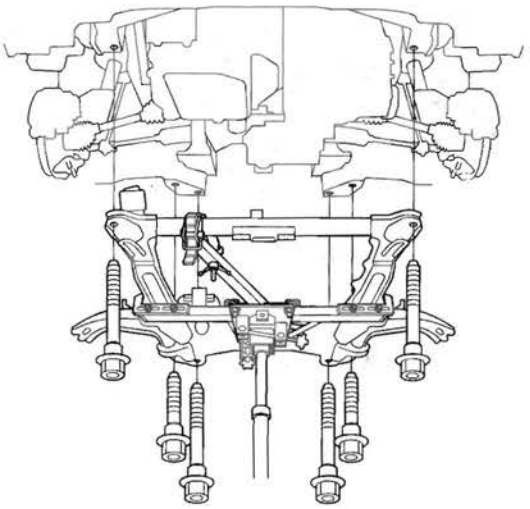

45. Hang the steering gearbox to the body with a strap.

46. Remove the torque converter cover (A), and remove the drive plate bolts (B) (8) while rotating the crankshaft pulley.

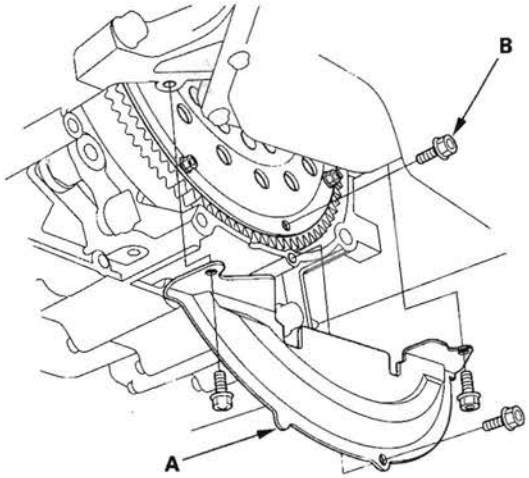

47. Remove the driveshafts from the differential and intermediate shaft. Coat all precision machined surfaces with clean engine oil, then put plastic bags over driveshaft ends.

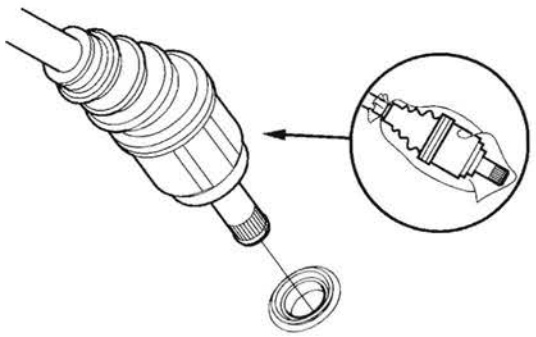

(cont'd)

Transmission Removal (cont'd)

48. Remove the intermediate shaft. Coat all precision machined surfaces with clean engine oil, then put plastic bags over intermediate shaft ends.

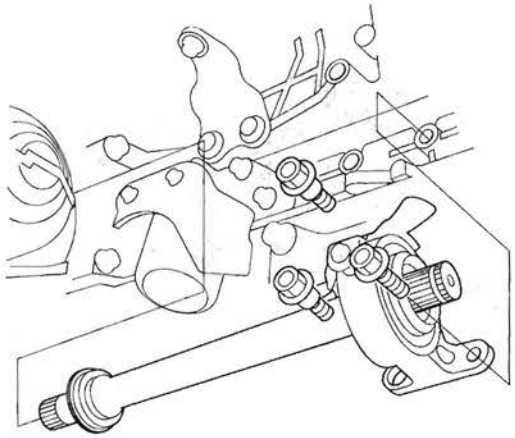

49. Remove the upper transmission housing mounting bolts.

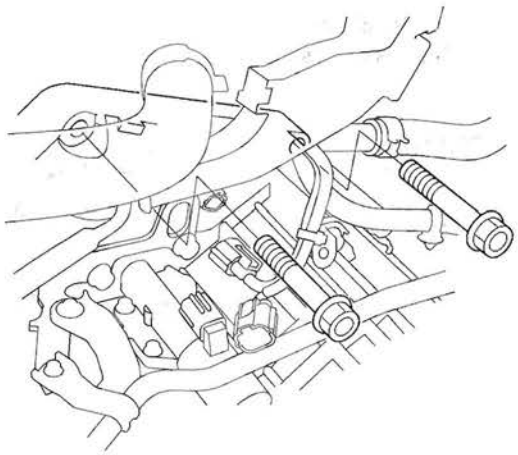

50. Remove the transmission mount bracket bolts.

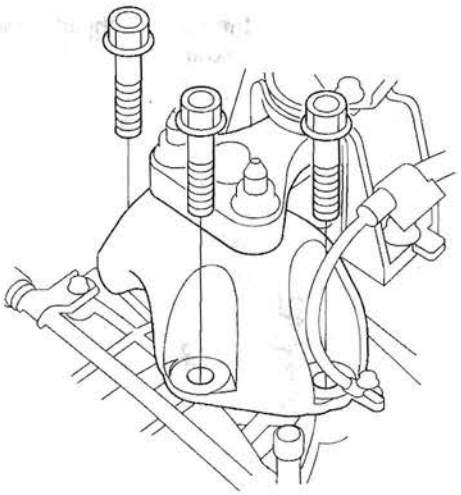

51. Remove the front transmission housing mounting bolts.

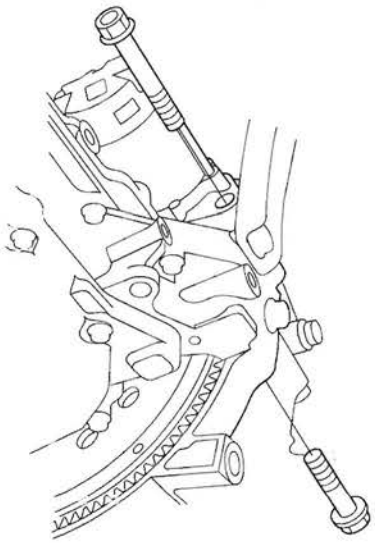

52. Lower the transmission by loosening the wing nut on the engine support hanger, and tilt the engine just enough for the transmission to clear the side frame.

53. Place a jack under the transmission.

54. Remove the rear transmission housing mounting bolts.

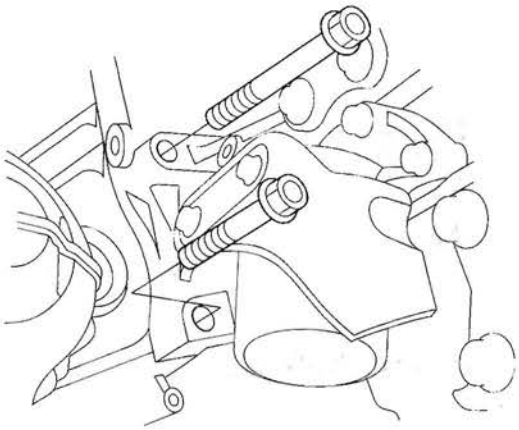

55. Slide the transmission away from the engine to remove it from the vehicle.

56. Remove the torque converter and dowel pins.

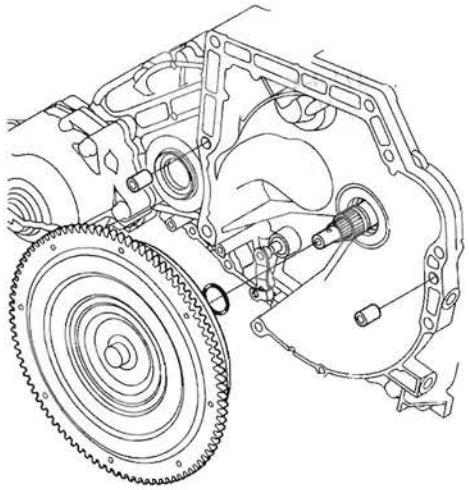

57. Inspect the drive plate, and replace it if it's damaged.

58. For 4WD model: Install the propeller shaft protector.

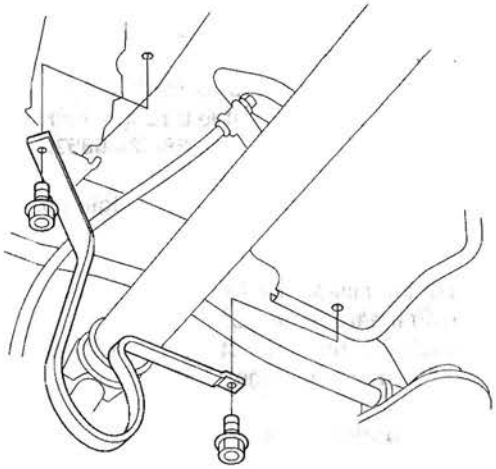

59. If you will be installing an overhauled or remanufactured transmission, clean the ATF cooler (see page 14-268).

Transmission Installation

Special Tools Required
- Engine hanger adapter VSB02C000015
- CR-V engine hanger adapter VSB02C000032
- Engine support hanger, A and Reds AAR-T-12566
- Front subframe adapter VSB02C000016

These special tools are available through the Honda Tool and Equipment Program 1-888-424-6857.

NOTE: Use fender covers to avoid damaging painted surfaces.

1. If you did not clean the ATF cooler when you removed the transmission and you are installing an overhauled or remanufactured transmission, clean the ATF cooler (see page 14-268).

2. For 4WD model: Remove the propeller shaft protector.

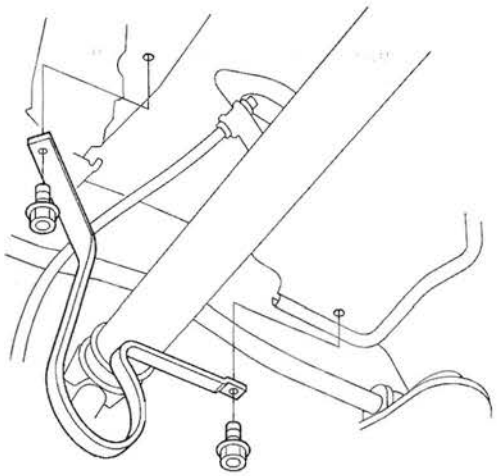

3. Install the torque converter (A) on the mainshaft (B) with the new O-ring (C).

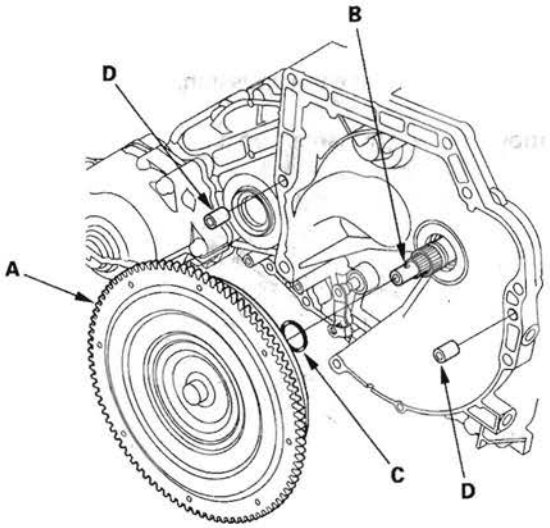

4. Install the 14 x 20 mm dowel pins (D) in the torque converter housing.

5. Place the transmission on the jack, and raise the transmission to the engine level, then fit the transmission to the engine.

6. Install the rear transmission housing mounting bolts.

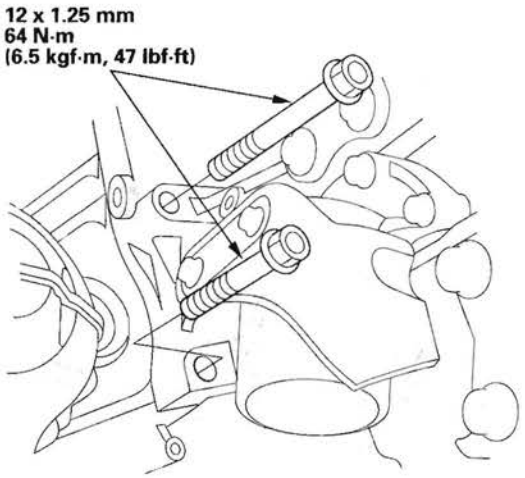

7. Install the front transmission housing mounting bolts.

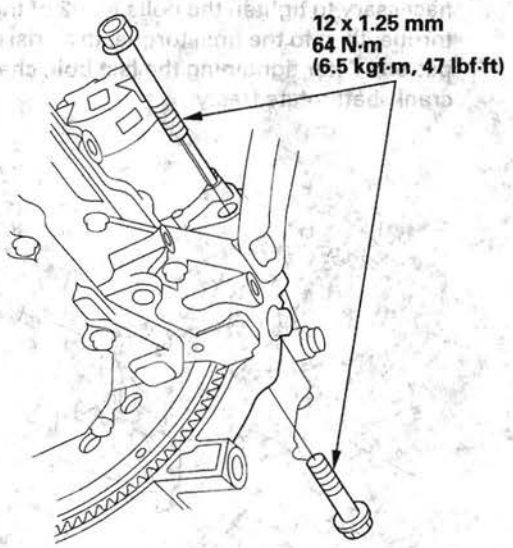

8. Install the upper transmission housing mounting bolts.

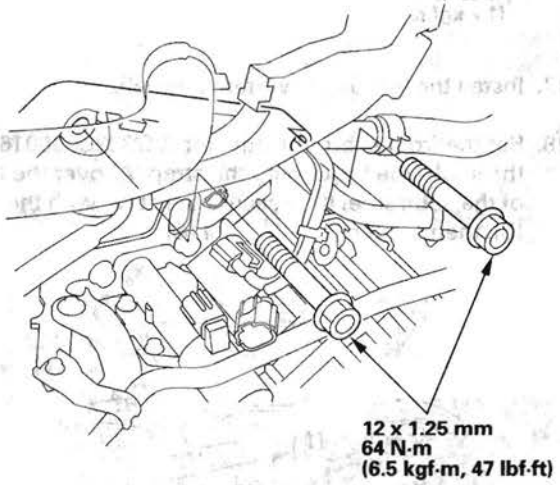

9. Secure the transmission mount bracket on the transmission housing with the new mounting bolts.

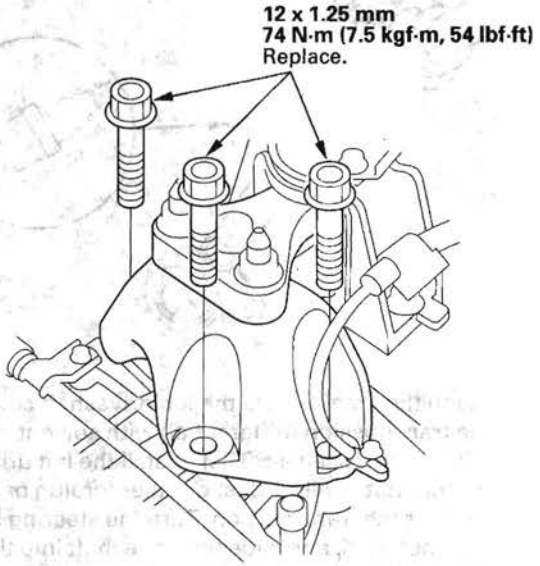

10. Install the new set ring (A) on the intermediate shaft (B).

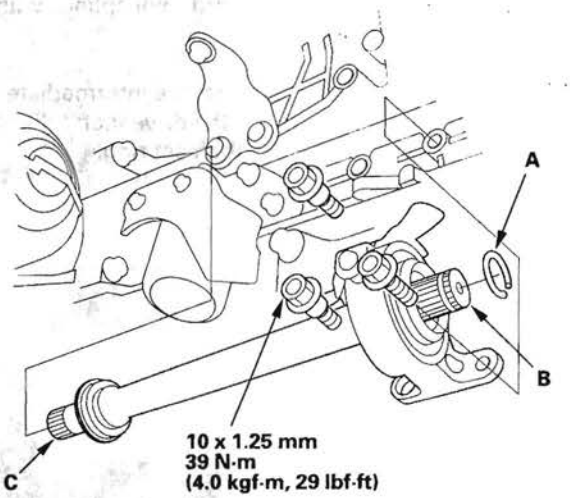

11. Clean the areas where the intermediate shaft contacts the transmission (differential) with solvent, and dry with compressed air. Apply ATF to the intermediate shaft splines (C), then install the intermediate shaft, be sure not to allow dust or other foreign particles to enter the transmission.

(cont'd)

Transmission Installation (cont'd)

12. Install the new set ring (A) on the left driveshaft (B).

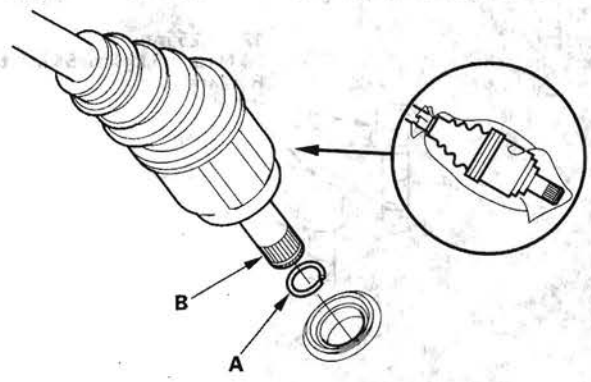

13. Clean the areas where the left driveshaft contacts the transmission (differential) with solvent, and dry with compressed air. Then install the left driveshaft, be sure not to allow dust or other foreign particles to enter the transmission. Turn the steering knuckle fully outward, and slide the driveshaft into the differential until you feel its set ring fully engage the side gear.

14. Apply right driveshaft inboard-joint splines with the recommended grease.

15. Slide the right driveshaft over the intermediate shaft splines until you feel the driveshaft fully engage the intermediate shaft set ring.

16. Attach the torque converter to the drive plate with eight bolts (A). Rotate the crankshaft pulley as necessary to tighten the bolts to 1/2 of the specified torque, then to the final torque, in a crisscross pattern. After tightening the last bolt, check that the crankshaft rotate freely.

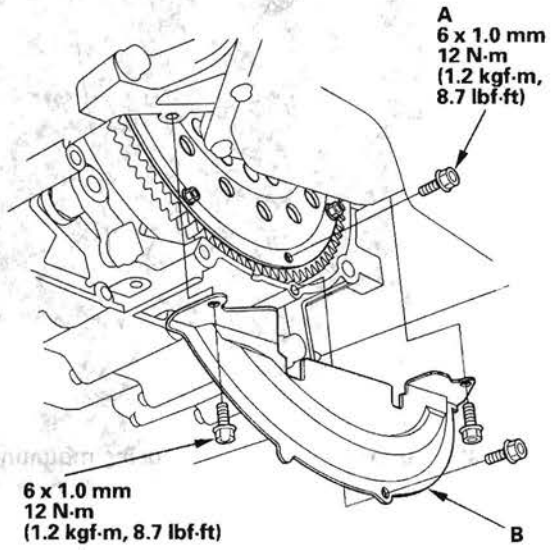

17. Install the torque converter cover (B).

18. Set the front subframe adapter (VSB02C000016) to the subframe by looping the strap (A) over the front of the subframe, then secure the strap with the stop (B), then tighten the wing nut (C).

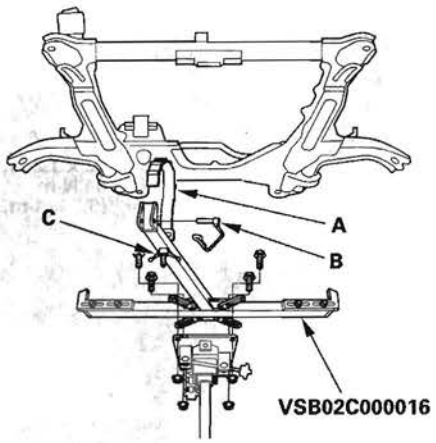

19. Loosely install the new subframe mounting bolts.

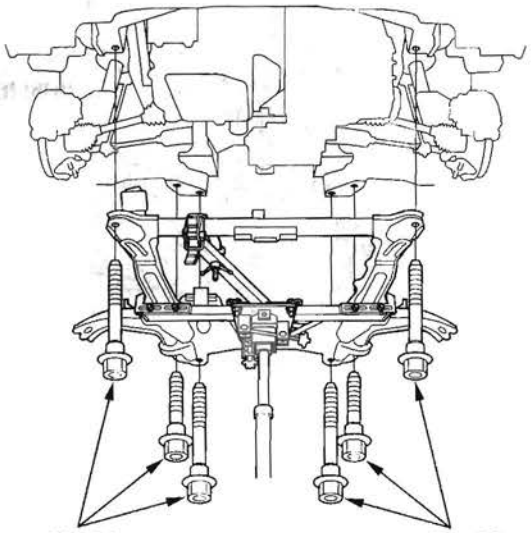

14 x 1.5 mm
103 N·m
(10.5 kgf·m,
75.9 lbf·ft)
Replace.

14 x 1.5 mm
103 N·m
(10.5 kgf·m,
75.9 lbf·ft)
Replace.

20. Align all reference marks (A) on the front subframe (B) with the marks you made on the body, then tighten the mounting bolts on the subframe to the specified torque.

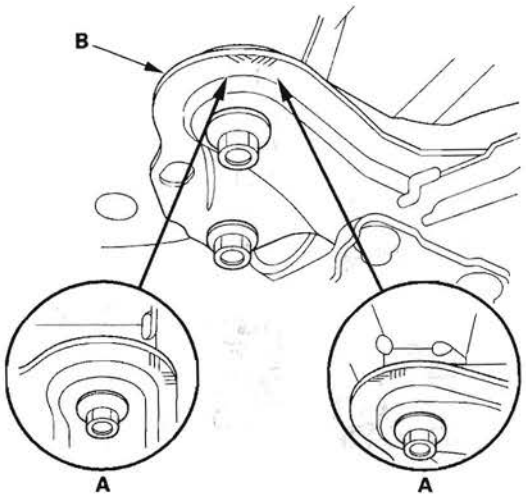

21. Install the new mid-bracket bolts.

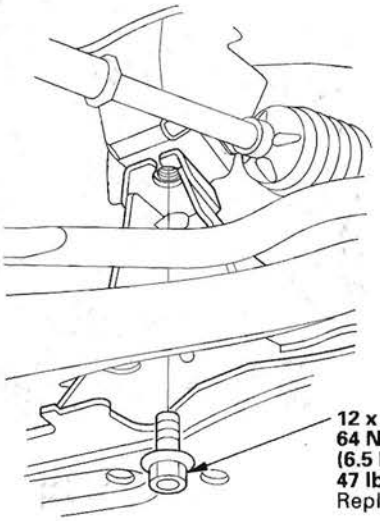

12 x 1.25 mm
64 N·m
(6.5 kgf·m,
47 lbf·ft)
Replace.

22. Secure the lower torque rod with the new bolts.

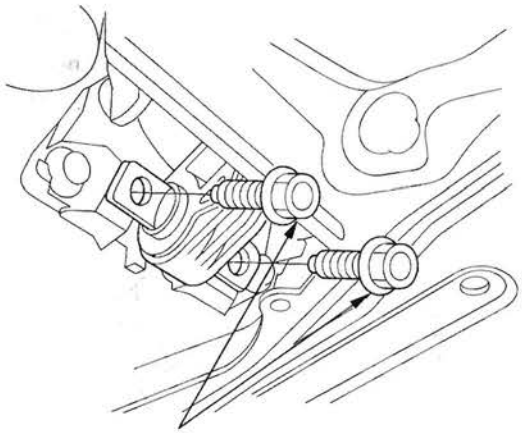

12 x 1.25 mm
88 N·m (9.0 kgf·m, 65 lbf·ft)
Replace.

(cont'd)

Transmission Installation (cont'd)

23. For 4WD model: Install the propeller shaft protector.

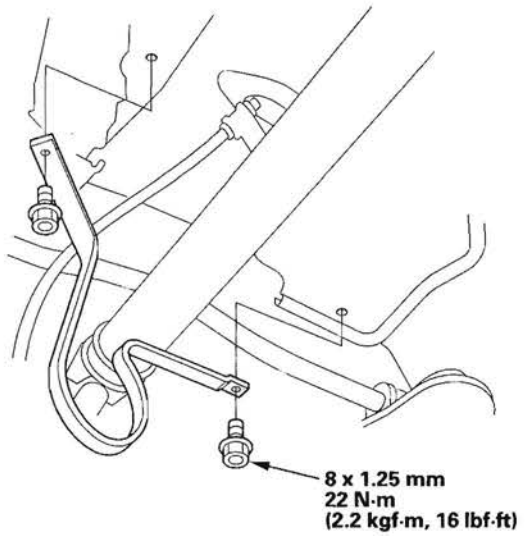

24. For 4WD model: Install the propeller shaft (A) to the transfer companion flange (B) by aligning the reference mark (C).

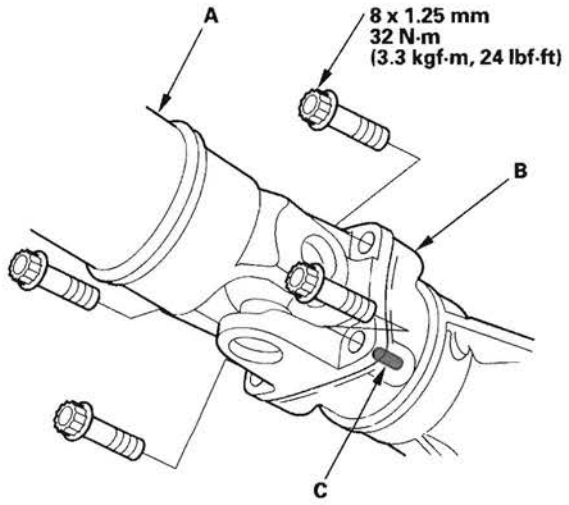

25. Loosely install the steering gearbox bracket mounting bolts.

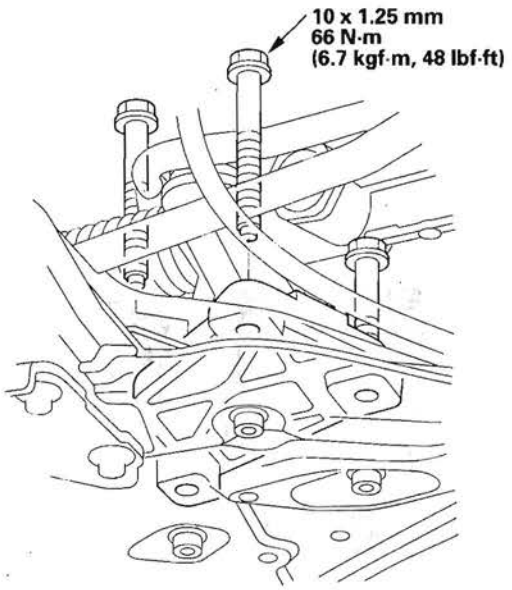

26. Loosely install the steering gearbox bracket mounting bolts.

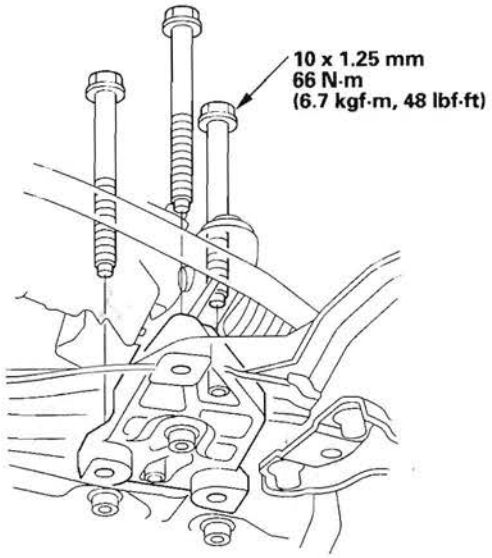

27. Tighten the steering gearbox bracket mounting bolts to the specified torque.

28. Install both lower arms (A) to both ball joints (B), and loosely install the new mounting nuts and bolts.

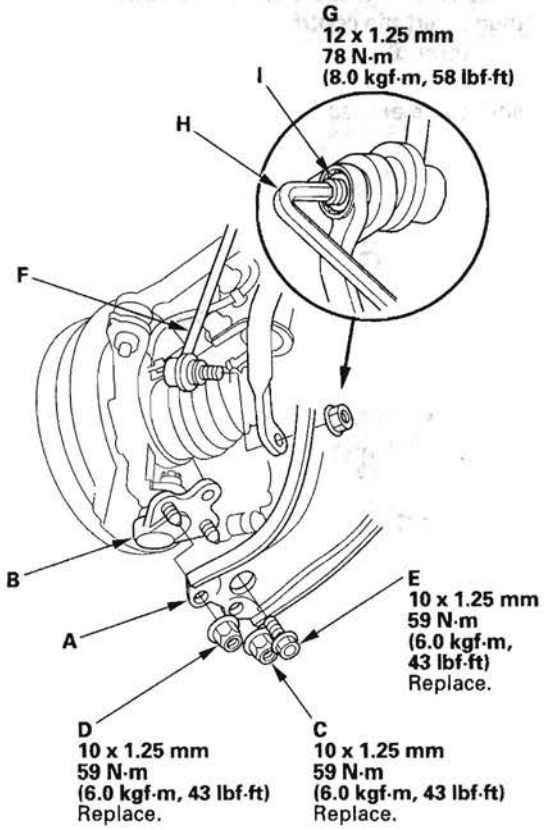

29. Tighten the nuts and bolts to 59 N·m (6.0 kgf·m, 43 lbf·ft) in the following order: the nut on the front (C), the nut on the rear (D), then the bolt (E).

30. Install the stabilizer links (F) to the stabilizer, and install the nuts (G). Insert a 6 mm Allen wrench (H) in the ball joint pin (I), and tighten the nuts.

31. Install the three-way catalytic converter (A) with the bolts, the new self-locking nuts, and new gaskets (B) (C).

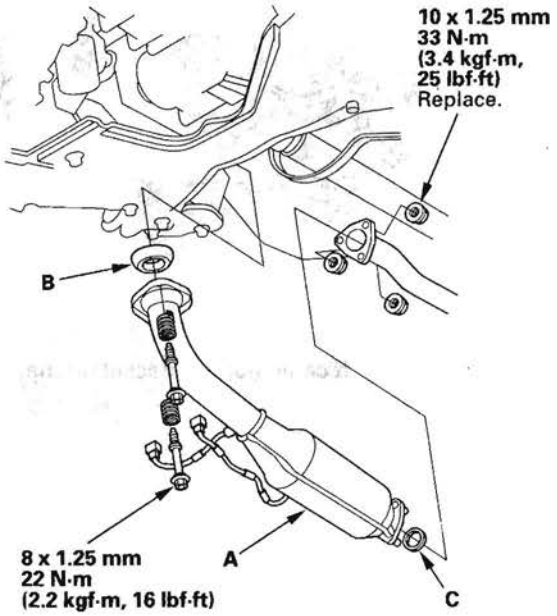

32. Connect the A/F sensor connector and the secondary heated oxygen sensor connector.

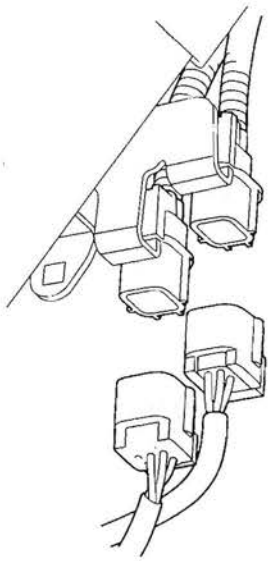

(cont'd)

Transmission Installation (cont'd)

33. Install the sensor harnesses in the harness clamps.

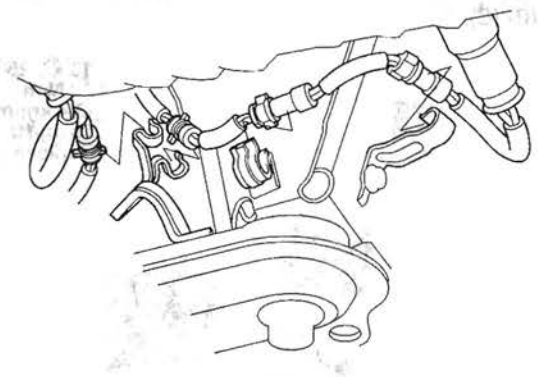

34. Install the shift cable holder bracket on the transmission.

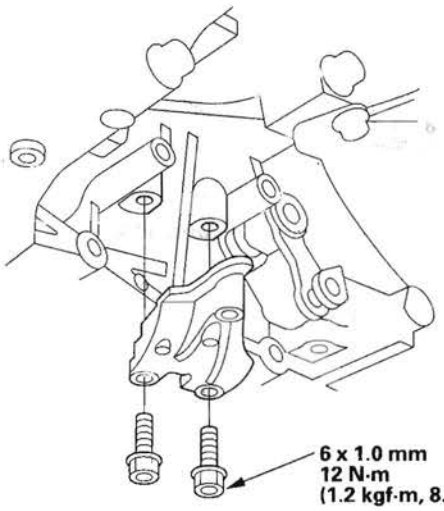

35. Apply molybdenum grease to the bore hole of the synthetic resin bushing (A) in the shift cable end (B). Attach the shift cable end to the control lever (C), then insert the control pin (D) into the control lever hole through the shift cable end, and secure the control pin with the spring clip (E). Do not bend the shift cable excessively.

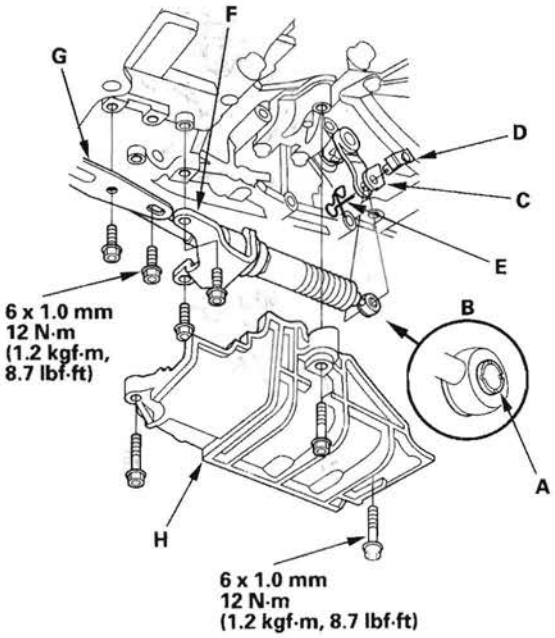

36. Secure the shift cable brackets (F) (G) with the bolts.

37. Install the shift cable cover (H).

38. Secure the ATF filter with the bolt on the front subframe.

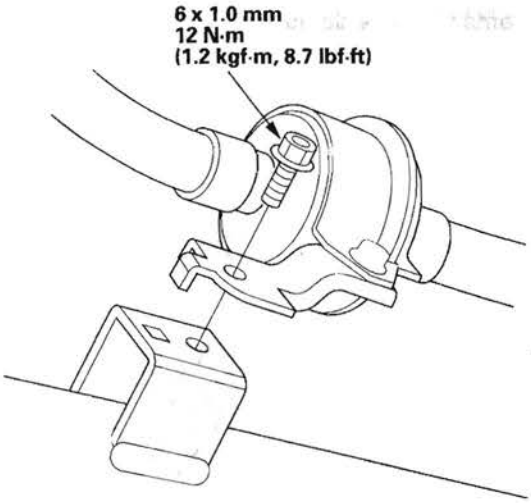

39. Secure the power steering fluid line clamp (A) with the bolt.

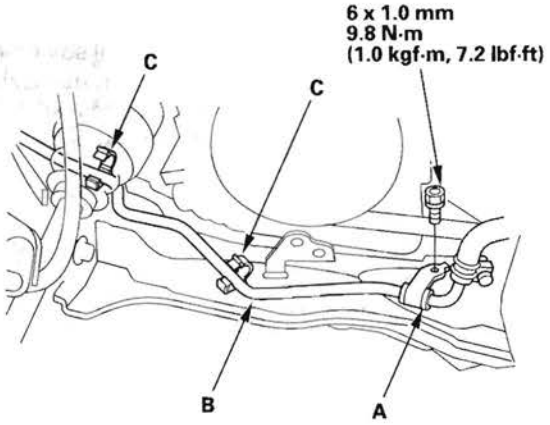

40. Secure the power steering fluid line (B) with the clamps (C).

41. Remove the engine support hanger and engine hanger adapters.

42. Remove the engine hanger adapter (VSB02C000015) from the cylinder head.

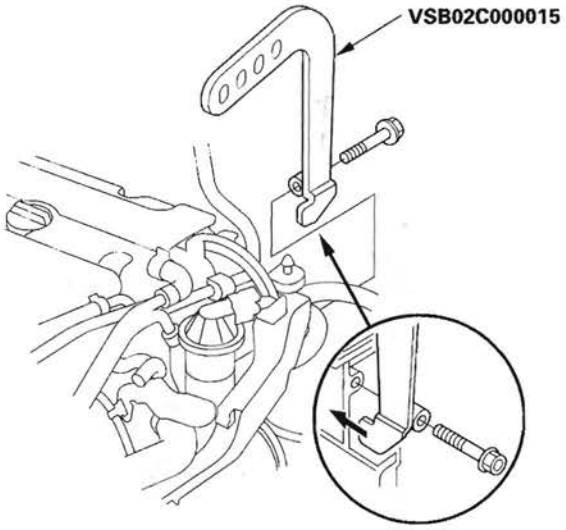

43. Connect the ATF cooler hoses (A) to the ATF cooler lines (B), and secure the hoses with the clips (C) (see page 14-270).

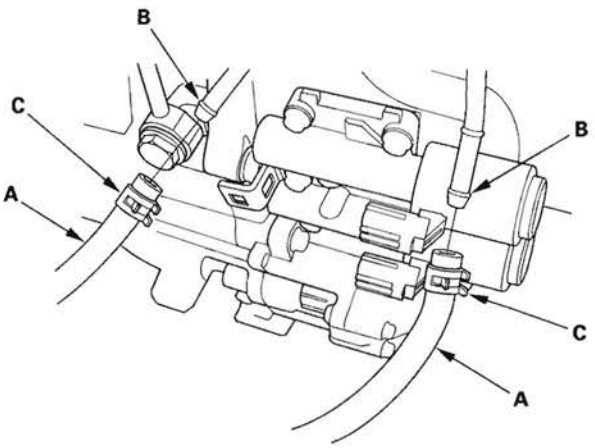

(cont'd)

Transmission Installation (cont'd)

44. Connect the shift solenoid harness connector (A), A/T clutch pressure control solenoid valve C connector (B), and A/T clutch pressure control solenoid valve B connector (C), and install the harness clamp (D) on the clamp bracket (E).

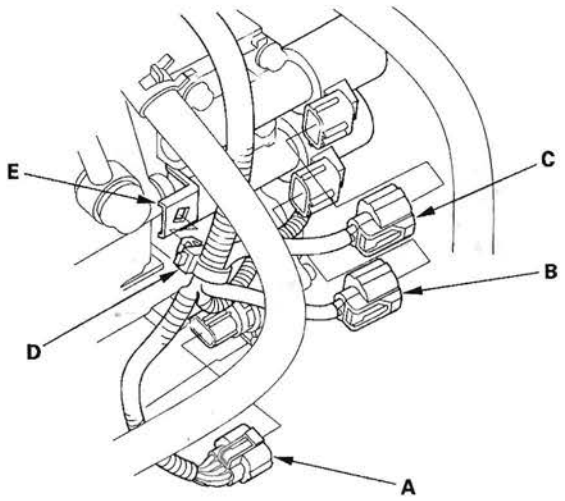

45. Connect the 3rd clutch transmission fluid pressure switch connector (A), and install the harness clamp (B) on its clamp bracket (C).

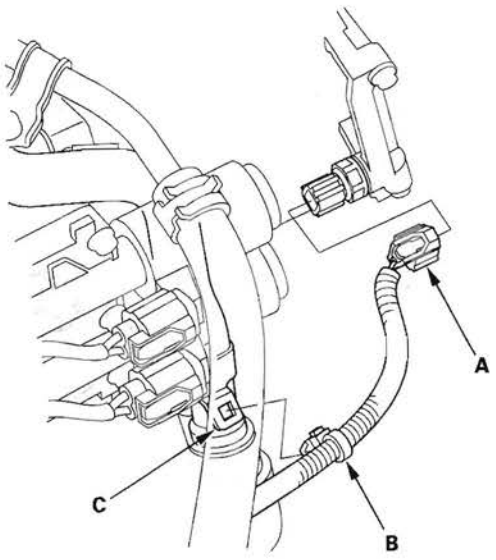

46. Connect the output shaft (countershaft) speed sensor connector (A) and input shaft (mainshaft) speed sensor connector (B), and install the harness clamp (C) on its clamp bracket (D).

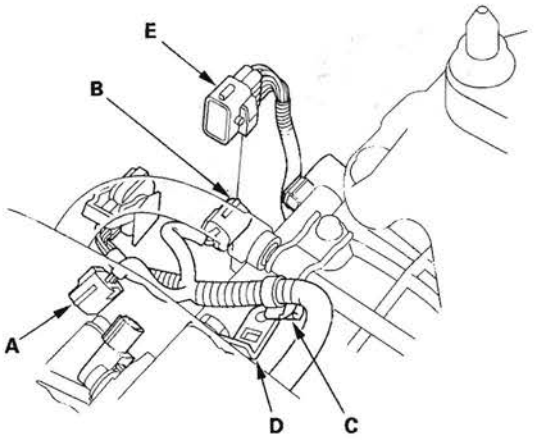

47. Install the transmission range switch connector (E) on the connector bracket, and connect the connector.

48. Connect the A/T clutch pressure control solenoid valve A connector (A) and 2nd clutch transmission fluid pressure switch connector (B), and install the harness clamps (C) on the clamp brackets (D).

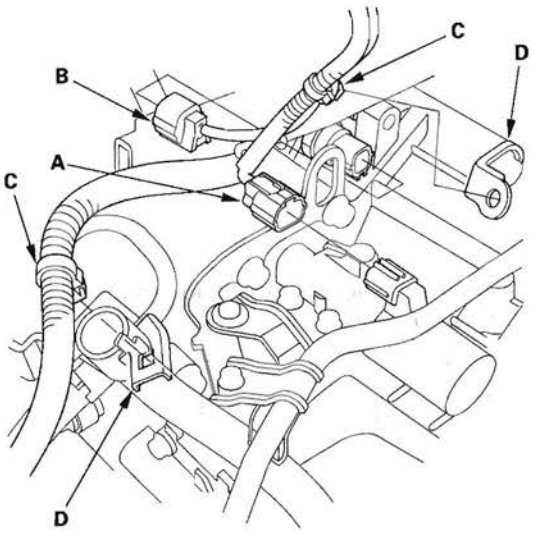

49. Install the air cleaner housing mounting bracket, and install the harness clamp on the harness clamp bracket.

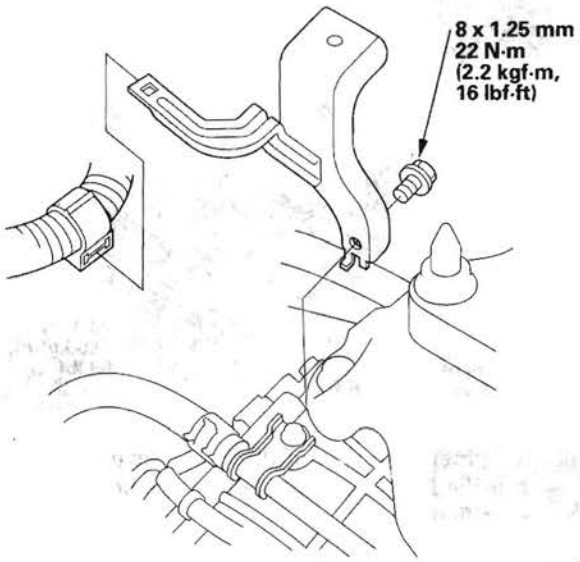

50. Refill the transmission with ATF (see step 5 on page 14-239).
51. Install the battery base.
52. Install the air cleaner housing and intake air duct.
53. Install the bulkhead cover.
54. Install both lids on the cowl cover.
55. Install the battery tray, battery, and battery cover, then secure the battery with its hold-down bracket.
56. Connect the battery terminals, and apply grease around the battery terminals.
57. Set the parking brake. Start the engine, and shift the transmission through all positions three times.
58. Check the shift lever operation, A/T gear position indicator operation, and shift cable adjustment.
59. Check and adjust the front wheel alignment (see page 18-5).
60. Install the splash shield.
61. Check the ATF level (see page 14-238).
62. Enter the audio system or the navigation system (if equipped) anti-theft code, then enter the audio presets, and set the clock.
63. Do the road test procedure (see page 14-211).
64. After the road test, raise the vehicle on a lift, and make sure it is securely supported.

(cont'd)

Transmission Installation (cont'd)

65. Loosen the upper torque rod bolt (A).

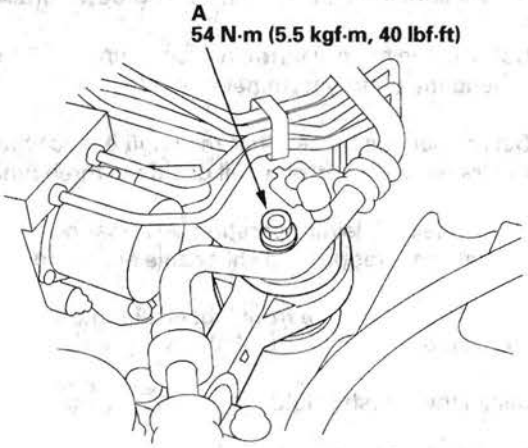

66. Loosen the transmission mount base bracket bolt (A) and nuts (B).

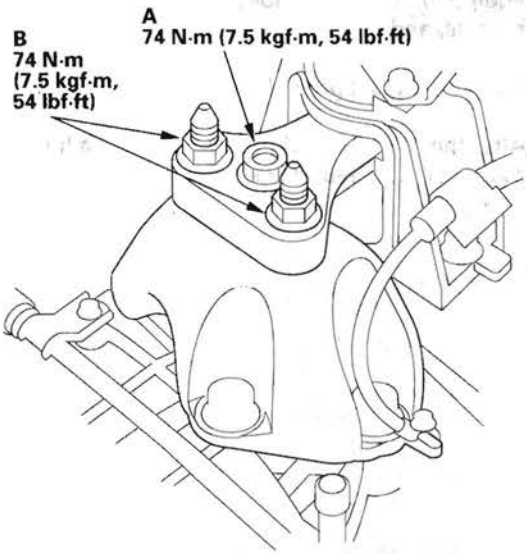

67. Loosen the lower torque rod bolts (A, B).

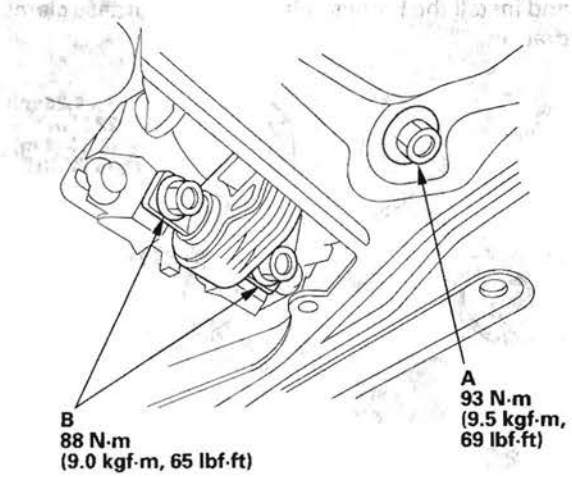

68. Retighten the lower torque rod bolts (B) to the specified torque, then retighten the bolt (A) to the specified torque.

69. Tighten the transmission mount base bracket bolt and nuts to the specified torque.

70. Tighten the upper torque rod bolt to the specified torque.

Drive Plate Removal and Installation

1. Remove the transmission assembly (see page 14-246).

2. Remove the drive plate (A) and washer (B) from the engine crankshaft.

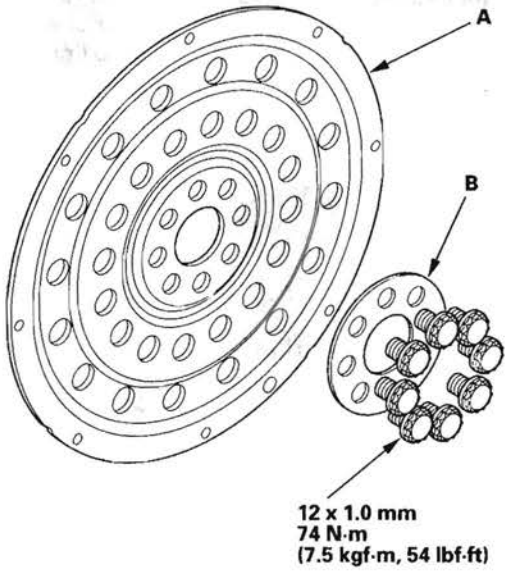

3. Install the drive plate and washer on the engine crankshaft, and tighten the eight bolts in a crisscross pattern in two or more steps.

4. Install the transmission assembly (see page 14-256).

ATF Cooler Cleaning

Special Tools Required
- ATF cooler cleaner GHTTTCF6H
- Magnetic nonbypass spin-on filter GTHGNBP2
  These special tools are available through the Honda Tool and Equipment Program 1-888-424-6857.

Before installing an overhauled or remanufactured automatic transmission, you must thoroughly clean the ATF cooler to prevent system contamination. Failure to do so could cause a repeat automatic transmission failure.

The cleaning procedure involves heated ATF-Z1 delivered under high pressure (100 psi). Check the security of all hoses and connections. Always wear safety glasses or a face shield, along with gloves and protective clothing. If you get ATF in your eyes or on your skin, rinse with water immediately.

⚠ WARNING

- Improper use of the ATF cooler cleaner can result in burns and other serious injuries.
- Always wear eye protection and protective clothing, and follow this procedure.

1. Check the fluid in the cooler cleaner tank. (The fluid level should be 4.5 inches from the top of the filler neck.) Adjust the level if needed; do not overfill. Use only Honda ATF-Z1; do not use any additives.

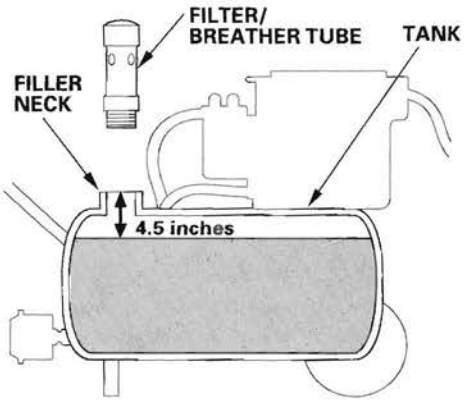

2. Plug the cooler cleaner into a 110 V grounded electrical outlet.

NOTICE

Make sure the outlet has no other appliances (light fixtures, drop lights, extension cords) plugged into it. Also, never plug the cooler cleaner into an extension cord or drop light; you could damage the unit.

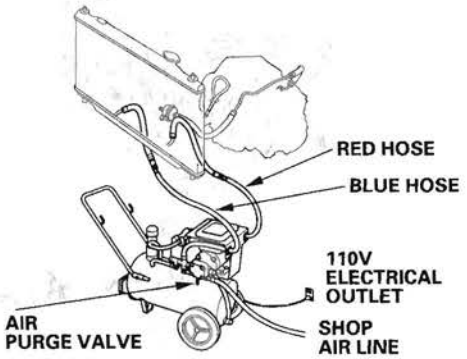

3. Flip the HEAT toggle switch to ON; the green indicator above the toggle switch comes on. Wait 1 hour for the cooler cleaner to reach its operating temperature. (The cooler cleaner is ready to use when the temperature gauge reads 140 to 150 °F.)

   NOTE: If the red indicator above the HEAT toggle switch comes on, the fluid level in the tank is too low for the tank heater to work (see step 1 of this procedure).

4. Select the appropriate pair of fittings, and attach them to the radiator, to the hoses, or to the banjo bolts for flow through the ATF cooler cleaner.

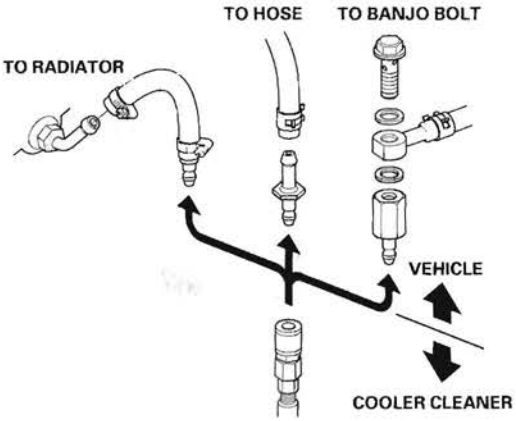

5. Connect the red hose to the cooler outlet line (the line that normally goes to the external filter on the transmission).

6. Connect the blue hose to the cooler inlet line.

7. Connect a shop air hose (regulated to 100 to 125 psi) to the air purge valve.

   NOTICE

   The quick-connect fitting has a one-way check valve to keep ATF from entering your shop's air system. Do not remove or replace the fitting. Attach the coupler provided with the cooler cleaner to your shop air line if your coupler is not compatible.

8. Flip the MOTOR toggle switch to ON; the green indicator above the toggle switch comes on. Let the pump run for 5 minutes. While the pump is running, open and close the air purge valve periodically to cause agitation and improve the cleaning process. Always open the valve slowly. At the end of the 5-minutes cleaning period, leave the air purge valve open.

   NOTE: While the pump is running with the air purge valve open, it is normal to see vapor coming from the filler/breather tube vents.

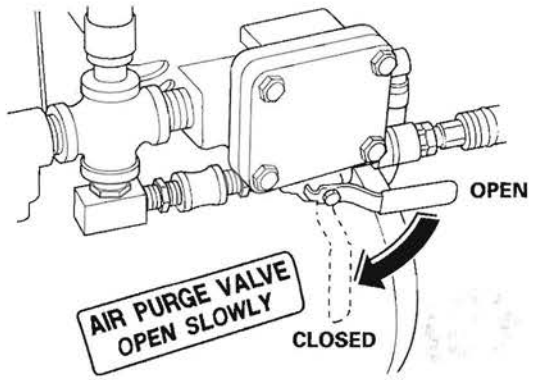

9. With the air purge valve open, flip the MOTOR toggle switch to OFF; the green indicator goes off. Leave the air purge valve open for at least 15 seconds to purge the lines and hoses of residual ATF, then close the valve.

10. Disconnect the red and blue hoses from the ATF cooler. Now connect the red hose to the cooler inlet line.

11. Now connect the blue hose to the cooler outlet line.

12. Flip the MOTOR toggle switch to ON, and let the pump run for 5 minutes. While the pump is running, open and close the air purge valve periodically. Always open the valve slowly. At the end of the 5-minutes cleaning period, leave the air purge valve open.

    NOTE: While the pump is running with the air purge valve open, it is normal to see vapor coming from the filler/breather tube vents.

13. With the air purge valve open, flip the MOTOR toggle switch to OFF. Leave the air purge valve open for at least 15 seconds to purge the lines and hoses of residual ATF, then close the valve.

14. Disconnect the red and blue hoses from the ATF cooler lines.

15. Connect the red and blue hoses to each other.

16. Disconnect the shop air from the air purge valve. Disconnect and stow the coupler if used.

17. Disconnect and stow the fittings from the ATF cooler inlet and outlet lines.

18. Unplug the cooler cleaner from the 110 V outlet.

Tool Maintenance

Follow these instructions to keep the ATF cooler cleaner working properly:

- Replace the two magnetic nonbypass spin-on filters once a year or when you notice a restriction in the ATF flow.
- Check the level and condition of the fluid in the tank before each use.
- Replace the ATF in the tank when it looks dark or dirty.

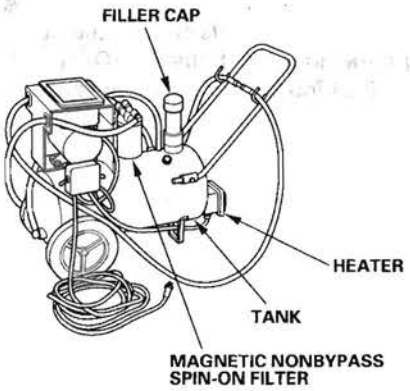

ATF Cooler Hose Replacement

1. Slide the ATF cooler/filter hose (A) on the ATF filter (B) until the hose end is 5—7 mm (0.20—0.28 in.) (C) away from the filter housing, and secure the hose with the clip (D) at 10—12 mm (0.39—0.47 in.) (E) from the filter housing. Install the cooler hose (F) on the other side of the ATF filter in the same manner.

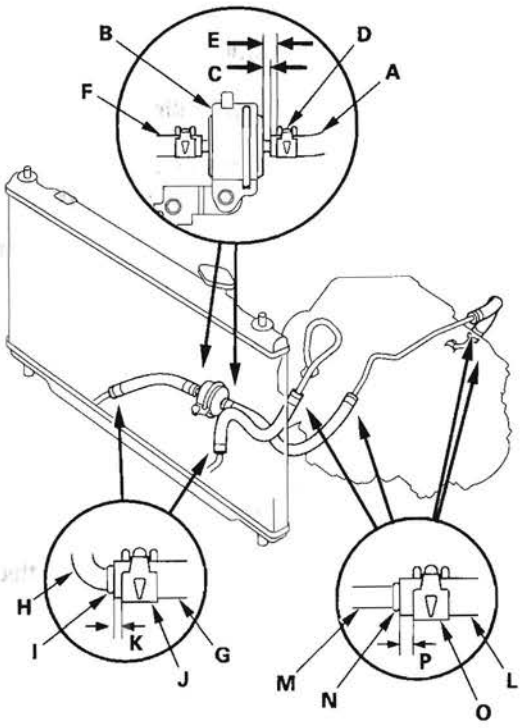

2. Slide the ATF cooler/filter hose (G) over the ATF cooler line (H) until the hose end contacts the bulge (I), and secure the hoses with the clip (J) at 2—4 mm (0.08—0.16 in.) (K) from the hose end.

3. Slide the ATF cooler hoses (L) over the ATF lines (M) until the hose ends contact the bulge (N), and secure the hoses with the clip (O) at 6—8 mm (0.24—0.31 in.) (P) from the hose end.

ATF Filter Replacement

NOTE: The ATF filter is not a scheduled maintenance item. Replace the filter only if it is leaking, or contaminated, or when the transmission is being overhauled or replaced with a remanufactured unit.

1. Raise the vehicle on a lift, or apply the parking brake, block the rear wheels, and raise the front of the vehicle. Make sure it is securely supported.
2. Remove the splash shield.
3. Remove the drain plug (A), and drain the transmission fluid (ATF).

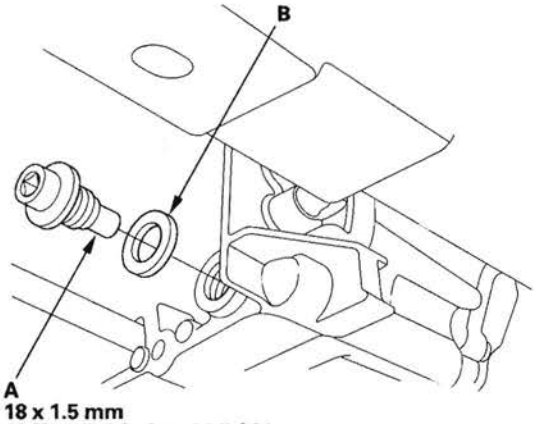

4. Reinstall the drain plug with the new sealing washer (B).
5. Disconnect the ATF cooler hoses (A) from the ATF filter (B).

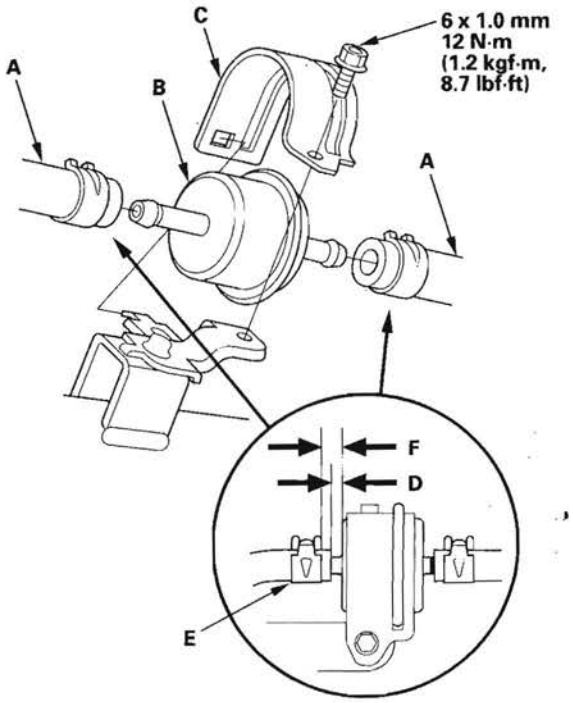

6. Remove the ATF filter holder (C), and remove the ATF filter.
7. Install the new ATF filter, and secure it with its holder and bolt.
8. Slide the ATF cooler hose on the ATF filter until the hose end is 5—7 mm (0.20—0.28 in.) (D) away from the filter housing, and secure the hose with the clip (E) at 10—12 mm (0.39—0.47 in.) (F) from the filter housing. Install the cooler hose on the other side of the ATF filter in the same manner.
9. Install the splash shield.
10. Refill the transmission with ATF (see step 5 on page 14-239).

Shift Lever Removal

1. Remove the following parts:
   - Heater control panel (see page 21-53)
   - Dashboard center panel (see page 20-93)
   - Center lower covers (see page 20-95)
2. Shift the shift lever into the R position.
3. Remove the nut securing the shift cable end.

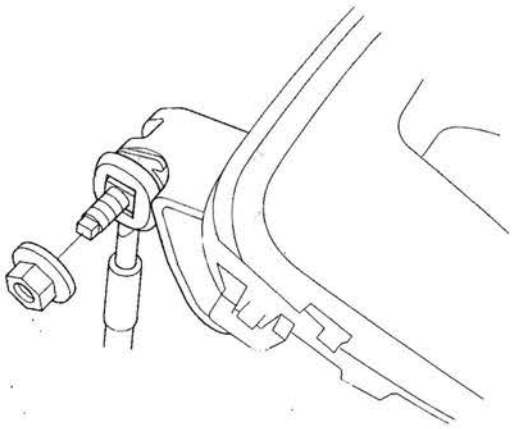

4. Unlock the retainer (A).

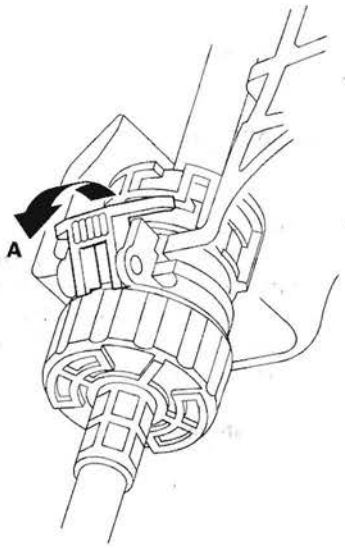

5. Rotate the socket holder retainer (A) counterclockwise (B) until it stops, and push the retainer lock (C) into the socket holder retainer to lock the retainer.

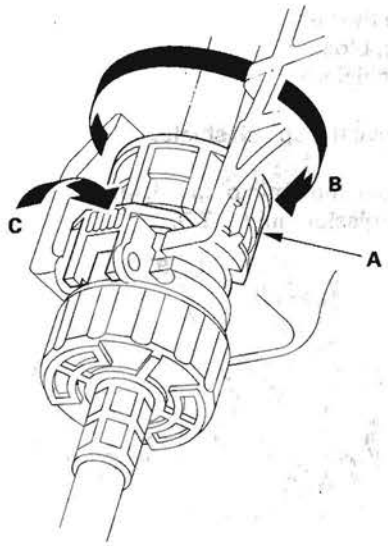

6. Lower the socket holder (A), then slide it to remove the shift cable (B) from the shift cable bracket (C). Do not remove the shift cable by pulling the shift cable guide (D).

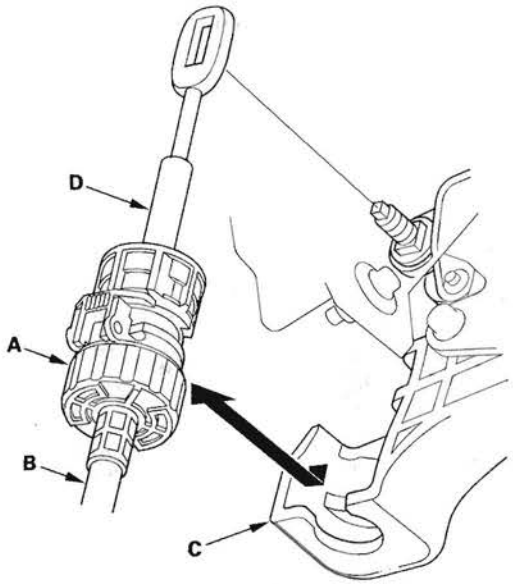

7. Cover around the opening of the dashboard with tape to prevent damage to the dashboard.

8. Remove the shift lever mounting bolt and nuts.

9. Disconnect the shift lock solenoid connector (A) and D3 switch/park pin switch/A/T gear position indicator panel light connector (B), and remove the shift lever assembly (C).

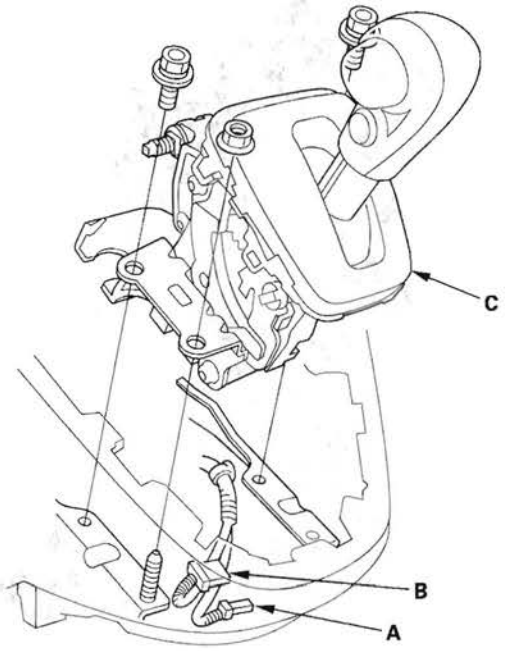

Shift Lever Installation

1. Cover around the opening of the dashboard with tape to prevent damage to the dashboard.
2. Install the shift lever assembly (A) in the dashboard.

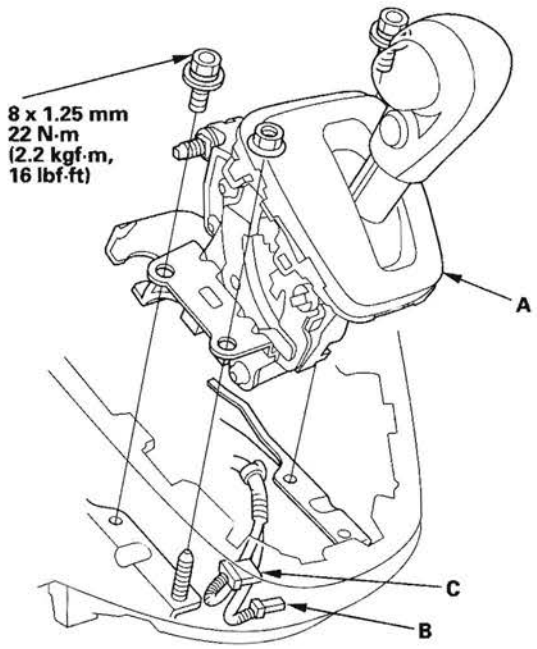

3. Connect the shift lock solenoid connector (B) and D3 switch/park pin switch/A/T gear position indicator panel light connector (C).
4. Install the shift cable on the shift lever, and adjust the shift cable (see step 7 on page 14-284).

Shift Lever Disassembly/Reassembly

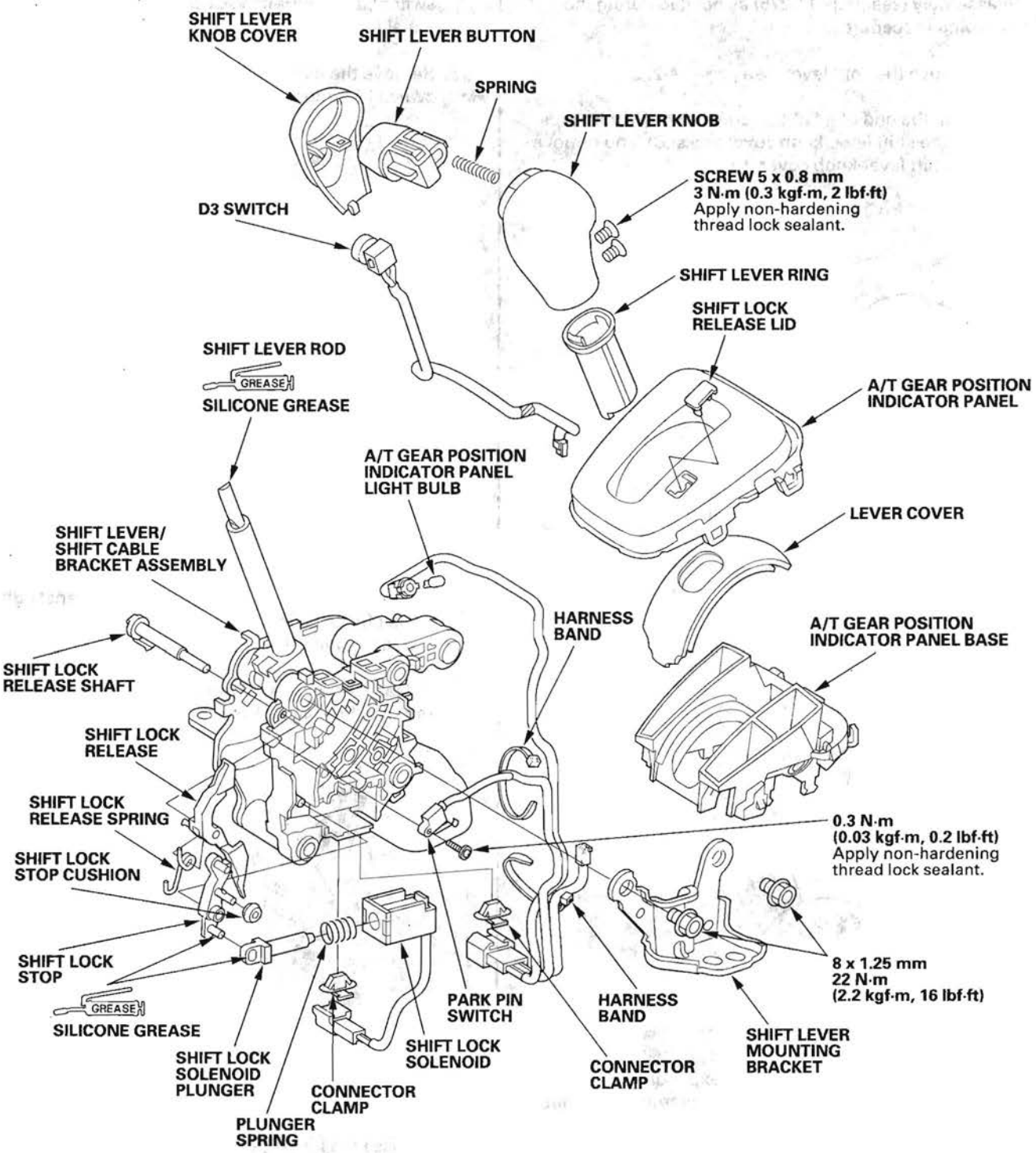

Shift Lever/Shift Cable Bracket Assembly Replacement

NOTE: Refer to the Shift Lever Disassembly and Reassembly (see page 14-275) as needed during the following procedures.

1. Remove the shift lever (see page 14-272).
2. Wrap the end of a flat-tip screwdriver (A) with tape, pry the shift lever knob cover locks (B), and remove the shift lever knob cover (C).

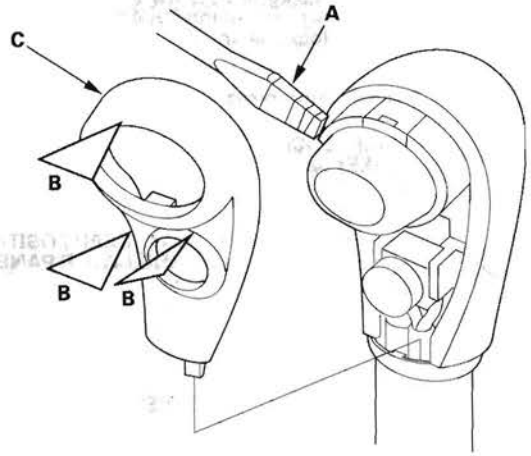

3. Remove the screws (A), shift lever button (B), and spring (C).

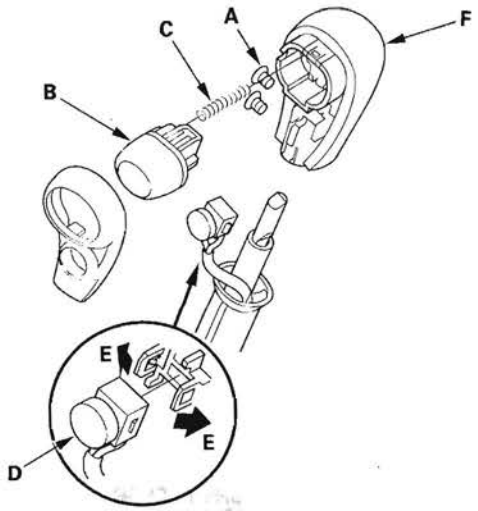

4. Remove the D3 switch (D) by expanding its locks (E) from the shift lever knob, and remove the shift lever knob (F).
5. Remove the shift lock solenoid connector and D3 switch/park pin switch/A/T gear position indicator panel light connector from the shift lever.
6. Remove the harness bands, and disconnect the D3 switch 2P connector.

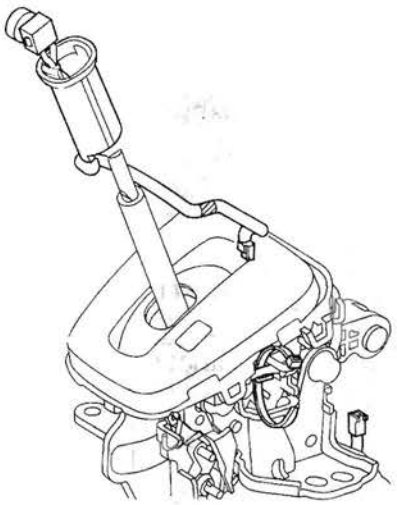

7. Remove the D3 switch harness and shift lever ring.
8. Remove the A/T gear position indicator panel light socket from the indicator panel, and remove the indicator panel.
9. Release the lock (A) of the shift lock release, and remove the shift lock release and release spring (B).

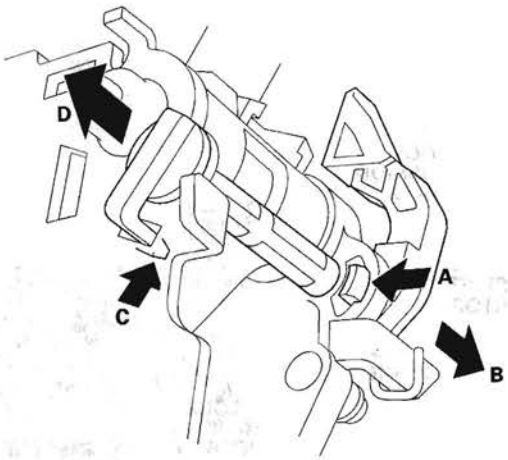

10. Release the lock (C) of the shift lock release shaft, and remove the shaft (D).

11. Remove the shift lever mounting bracket, and remove the park pin switch.

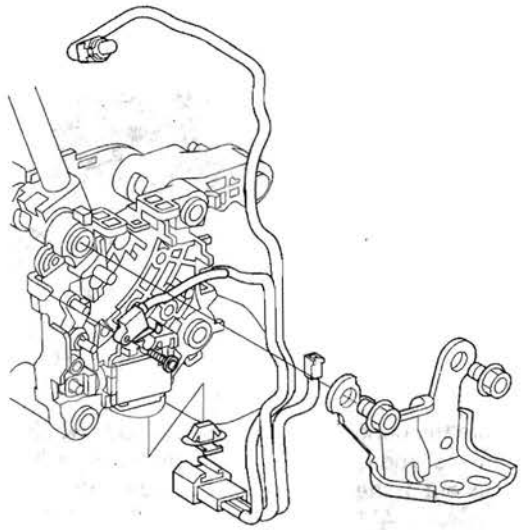

12. Release the lock tabs retaining the shift lock solenoid using thin blade screwdrivers.

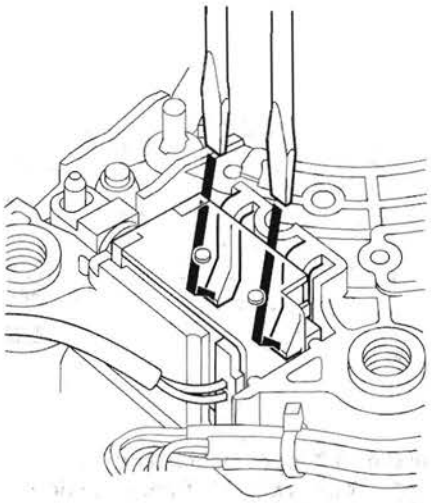

13. Insert a 6 mm pin (A) into the guide hole (B), and push the shift lock solenoid (C) out.

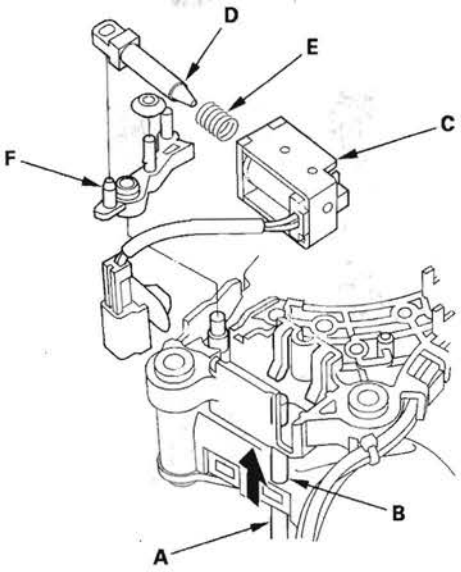

14. Remove the shift lock solenoid plunger (D), plunger spring (E), and shift lock stop and stop cushion (F).
15. Replace the shift lever/shift cable bracket assembly.
16. Install the shift lock stop and stop cushion.
17. Apply silicone grease to joint of the shift lock solenoid plunger and shift lock stop, if necessary.
18. Install the shift lock solenoid plunger and plunger spring in the shift lock solenoid.
19. Install the shift lock solenoid by aligning the joint of the shift lock solenoid plunger with the tip of the shift lock stop, then push the shift lock solenoid into the shift lever securely.

(cont'd)

Shift Lever/Shift Cable Bracket Assembly Replacement (cont'd)

20. Apply non-hardening thread lock sealant to the screw threads. Install the park pin switch (A), and secure the switch with the screw.

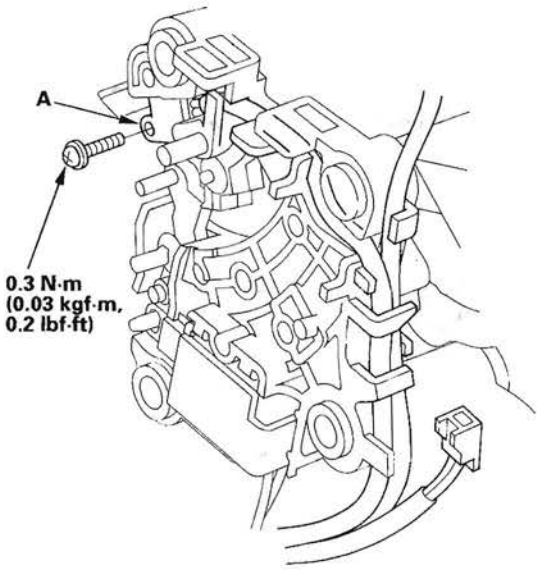

21. Install the shift lever mounting bracket.

22. Install the A/T gear position indicator panel, shift lever ring, and D3 switch harness.

23. Route the D3 switch harness (A), connect the D3 switch 2P connector (B), and install the connector in the holder.

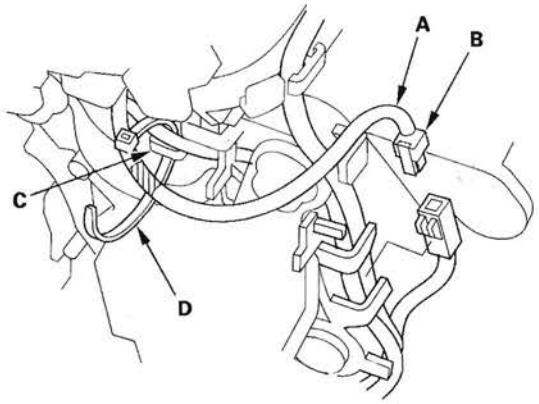

24. Tie the harnesses of the D3 switch and park pin switch at the guide (C) with the band (D).

25. Install the A/T gear position indicator panel light socket in the indicator panel.

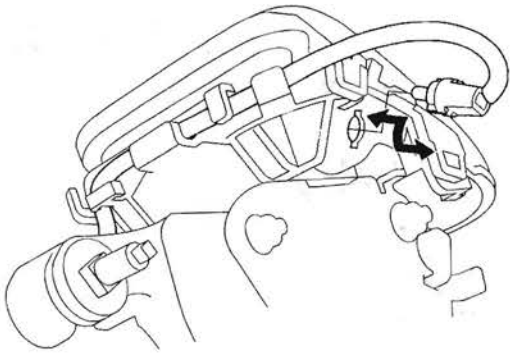

26. Route the park pin switch harness, D3 switch harness, and indicator panel light harness. Take a slack out of the harnesses, and secure the harnesses (A) with the band (B) at the guide (C).

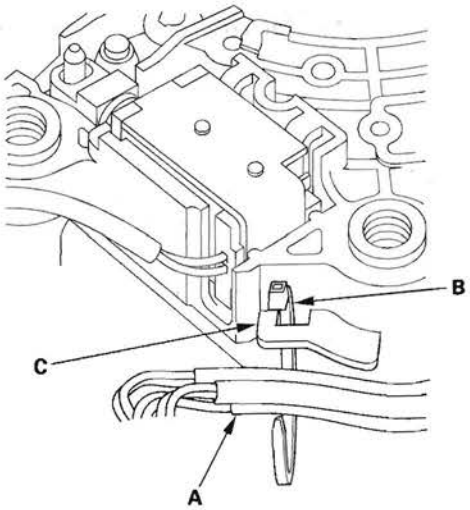

27. Install the shift lock solenoid connector and D3 switch/park pin switch/A/T gear position indicator panel light connector on the shift lever.

28. Install the shift lock release spring (A) in the shift lock release (B).

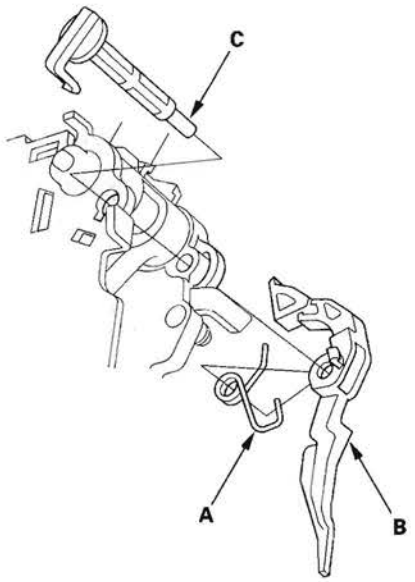

29. Install the shift lock release shaft (C) in the shift lever, and install the shift lock release and release spring on the release shaft end.

30. Make sure that the release spring end (A) is installed in the shift lock release (B), and the hooked end (C) is hitched on the catch (D).

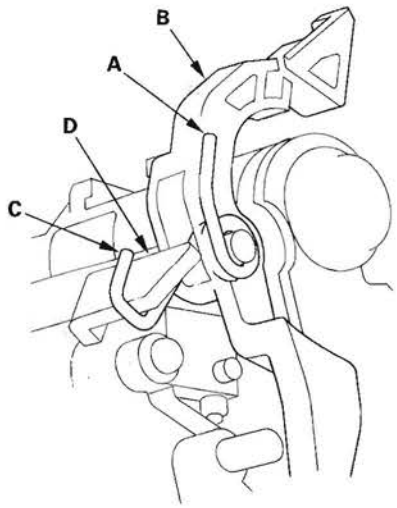

31. Apply silicone grease to the top of the shift lever rod (A), to the shift lever button spring (B), and to the area of the shift lever button (C) connected with the shift lever rod.

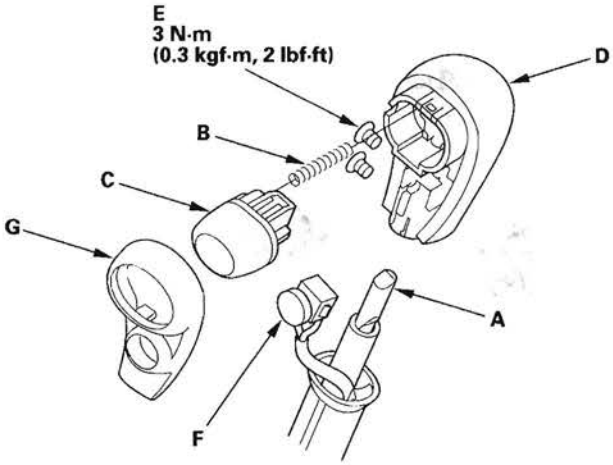

32. Install the shift lever button spring and button in the shift lever knob (D), and install the shift lever knob over the shift lever.

33. Apply non-hardening thread lock sealant to the screw threads, and secure the shift lever knob with the screws (E).

34. Install the D3 switch (F) and shift lever knob cover (G) on the shift lever knob.

35. Install the shift lever (see page 14-274).

Shift Lever Knob Replacement

NOTE: Refer to the Shift Lever Disassembly and Reassembly (see page 14-275) as needed during the following procedures.

1. Remove the shift lever (see page 14-272).
2. Wrap the end of a flat-tip screwdriver (A) with tape, pry the shift lever knob cover locks (B), and remove the shift lever knob cover (C).

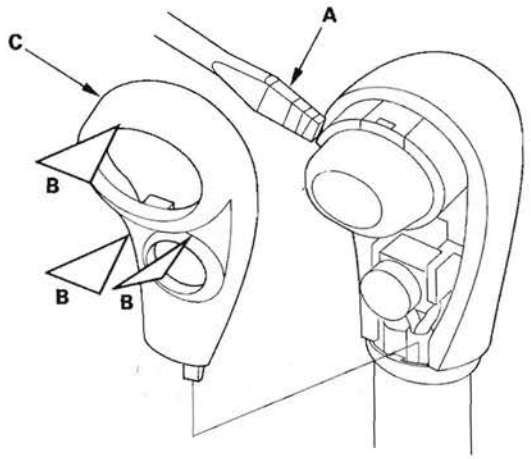

3. Remove the screws (A), shift lever button (B), and spring (C).

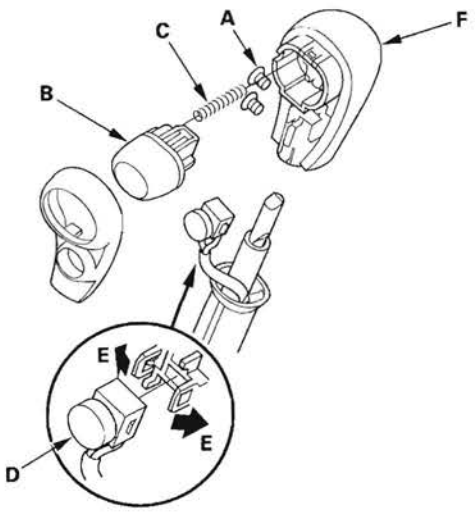

4. Remove the D3 switch (D) by expanding its locks (E) from the shift lever knob, and remove the shift lever knob (F).
5. Apply silicone grease to the top of the shift lever rod (A), to the shift lever button spring (B), and to the area of the shift lever button (C) connected with the shift lever rod.

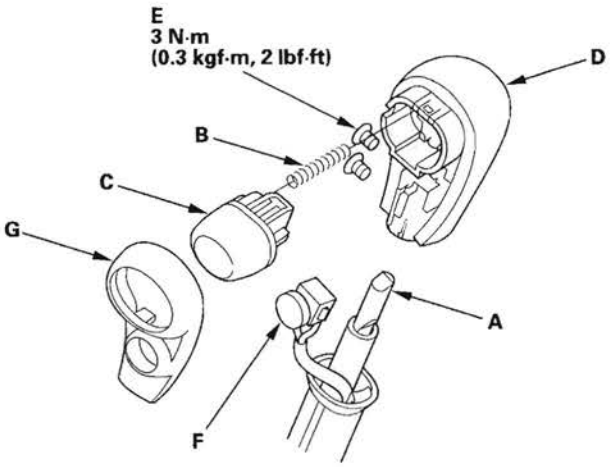

6. Install the shift lever button spring and button in the shift lever knob (D), and install the shift lever knob over the shift lever.
7. Apply non-hardening thread lock sealant to the screw threads, and secure the shift lever knob with the screws (E).
8. Install the D3 switch (F) and shift lever knob cover (G) on the shift lever knob.
9. Install the shift lever (see page 14-274).

Shift Lever Knob Cover Replacement

1. Wrap the end of a flat-tip screwdriver (A) with tape, pry the shift lever knob cover locks (B), and remove the shift lever knob cover (C).

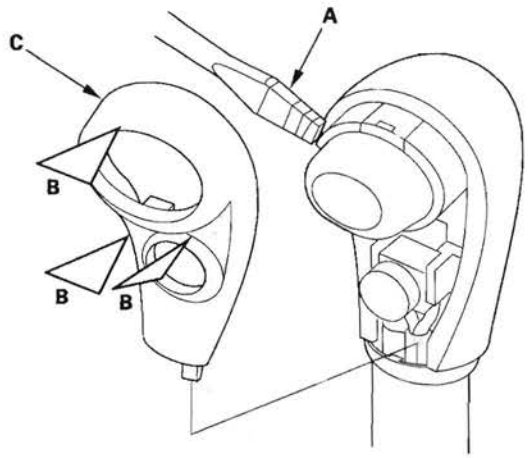

2. Replace the shift lever knob cover, and install the new cover on the shift lever knob.

Shift Lever Ring Replacement

NOTE: Refer to the Shift Lever Disassembly and Reassembly (see page 14-275) as needed during the following procedures.

1. Remove the shift lever (see page 14-272).
2. Wrap the end of a flat-tip screwdriver (A) with tape, pry the shift lever knob cover locks (B), and remove the shift lever knob cover (C).

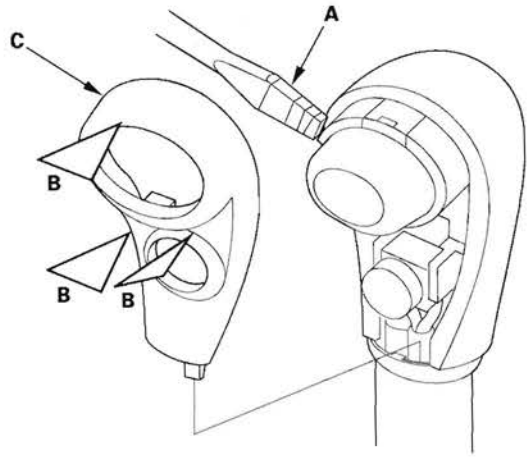

3. Remove the screws (A), shift lever button (B), and spring (C).

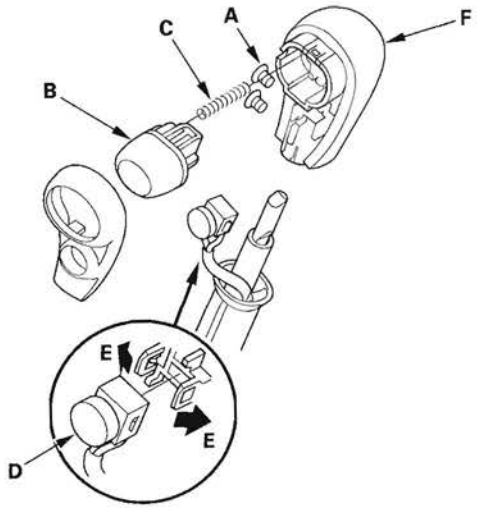

4. Remove the D3 switch (D) by expanding its locks (E) from the shift lever knob, and remove the shift lever knob (F).
5. Remove the harness band, and disconnect the D3 switch 2P connector (A).

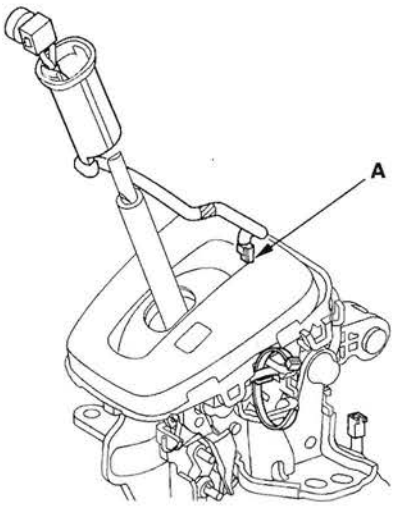

6. Remove the D3 switch and shift lever ring.
7. Replace the shift lever ring, and install the D3 switch harness through the shift lever ring.

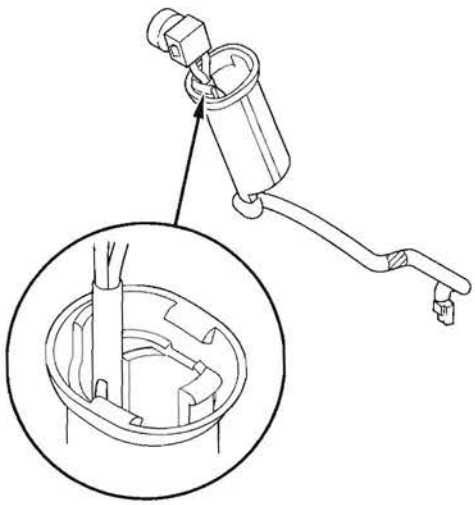

8. Install the shift lever ring over the shift lever.

9. Route the D3 switch harness (A), connect the D3 switch 2P connector (B), and install the connector in the holder.

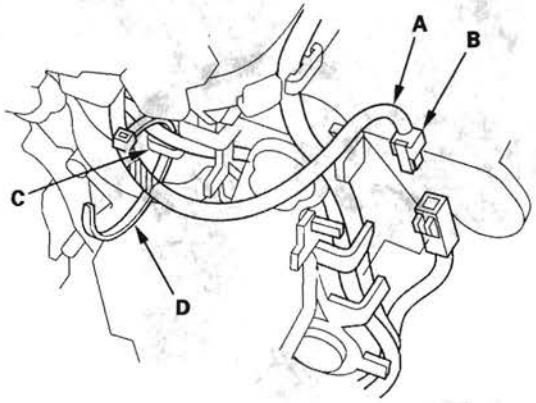

10. Tie the harnesses of the D3 switch and park pin switch at the guide (C) with the band (D).

11. Apply silicone grease to the top of the shift lever rod (A), to the shift lever button spring (B), and to the area of the shift lever button (C) connected with the shift lever rod.

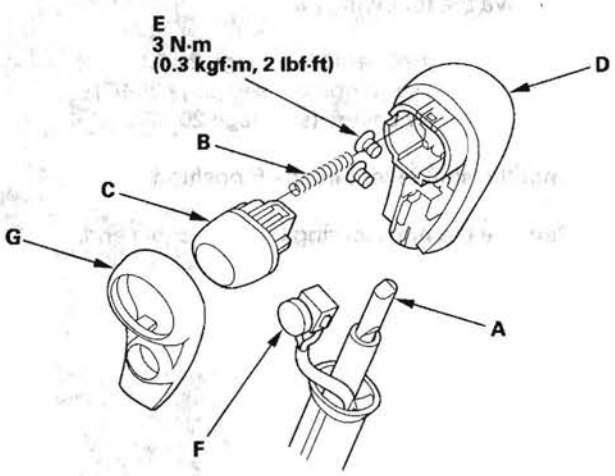

12. Install the shift lever button spring and button in the shift lever knob (D), and install the shift lever knob over the shift lever.

13. Apply non-hardening thread lock sealant to the screw threads, and secure the shift lever knob with the screws (E).

14. Install the D3 switch (F) and shift lever knob cover (G) on the shift lever knob.

15. Install the shift lever (see page 14-274).

Shift Cable Replacement

1. Lift the vehicle up on a lift or apply the parking brake, block rear wheels, and raise the front of the vehicle. Make sure it is securely supported.
2. Remove the following parts:
   - Heater control panel (see page 21-53)
   - Dashboard center panel (see page 20-93)
   - Center lower covers (see page 20-95)
3. Shift the shift lever into the R position.
4. Remove the nut securing the shift cable end.

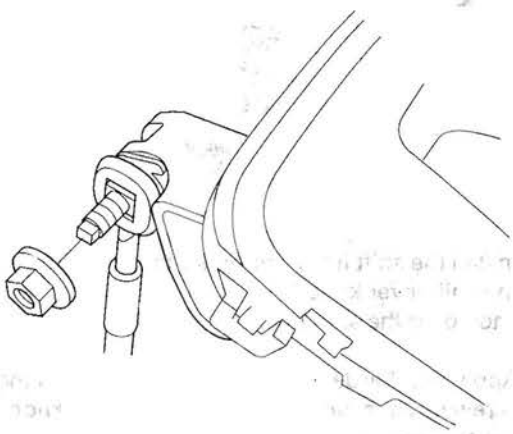

5. Unlock the retainer (A).

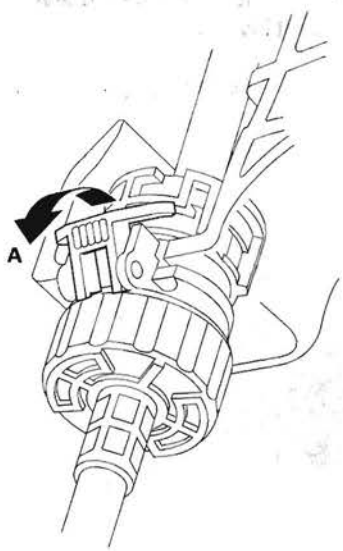

6. Rotate the socket holder retainer (A) counterclockwise (B) until it stops, and push in the retainer (C) to lock it.

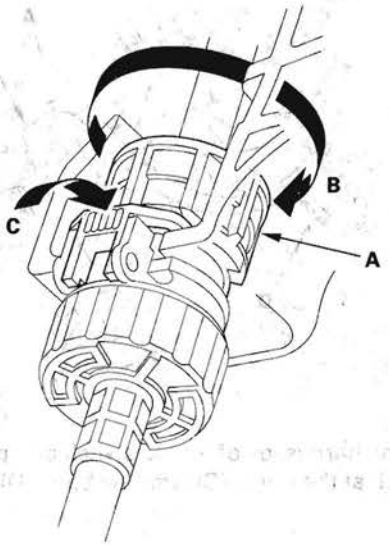

7. Lower the socket holder (A), then slide it to remove the shift cable (B) from the shift cable bracket (C).

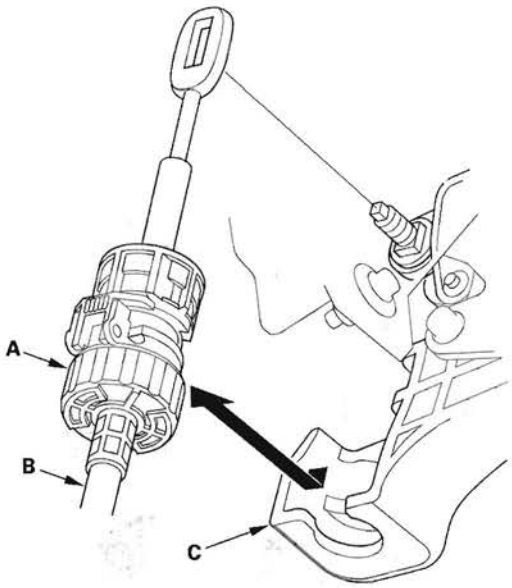

8. Remove the shift cable cover (A).

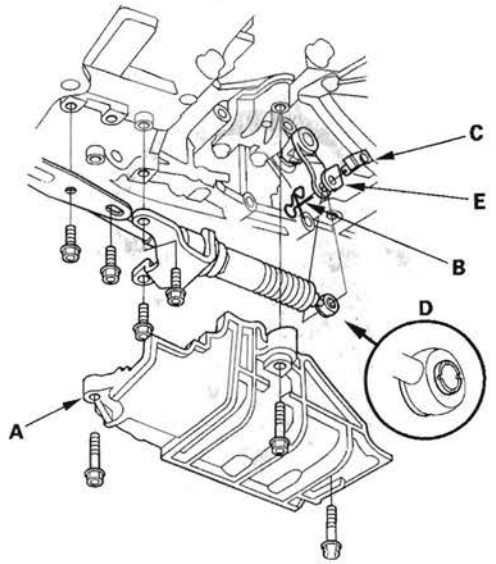

9. Remove the spring clip (B) and control pin (C), and separate the shift cable end (D) from the control lever (E). Remove the bolts securing the shift cable brackets.

10. Remove the nuts securing the shift cable grommet (A).

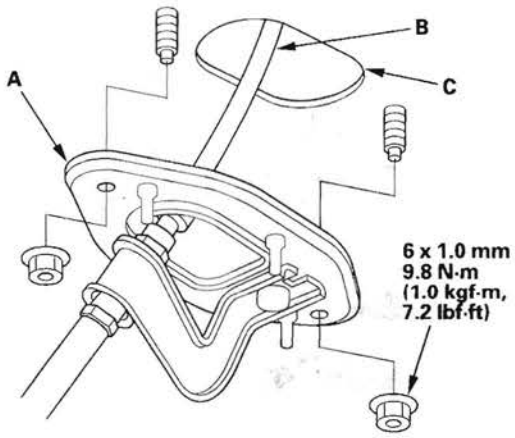

11. Remove the shift cable grommet, and pull out the shift cable (B).

12. Insert the new shift cable through the grommet hole (C), and install the grommet in its hole. Do not bend the shift cable excessively.

13. Secure the shift cable grommet with the nuts.

14. Apply molybdenum grease to the bore hole of the synthetic resin bushing (A) in the shift cable end (B), and attach the shift cable end to the control lever (C), then insert the control pin (D) into the control lever hole through the shift cable end, and secure the control pin with the spring clip (E). Do not bend the shift cable excessively.

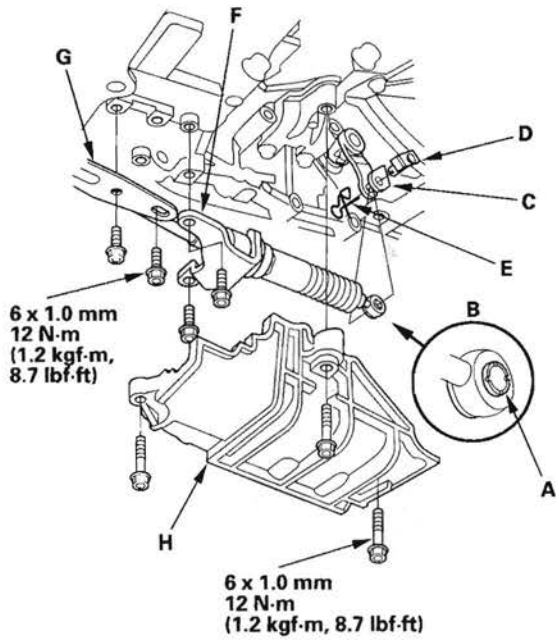

15. Secure the shift cable brackets (F) (G) with the bolts.

16. Install the shift cable cover (H).

17. Install the shift cable on the shift lever, and adjust the shift cable (see step 7 on page 14-287).

Shift Cable Adjustment

1. Remove the following parts:
   - Heater control panel (see page 21-53)
   - Dashboard center panel (see page 20-93)
   - Center lower covers (see page 20-95)
2. Shift the shift lever into the R position.
3. Remove the nut securing the shift cable end.

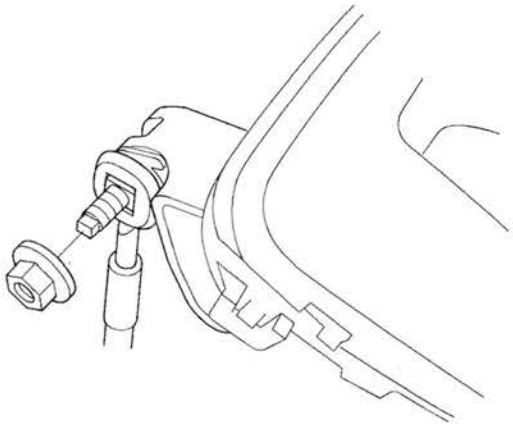

4. Unlock the retainer (A).

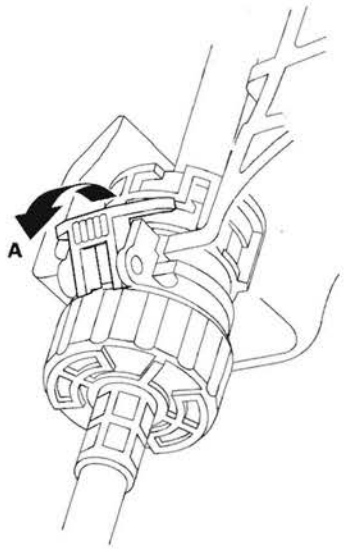

5. Rotate the socket holder retainer (A) counterclockwise (B) until it stops, and push in the retainer (C) to lock it.

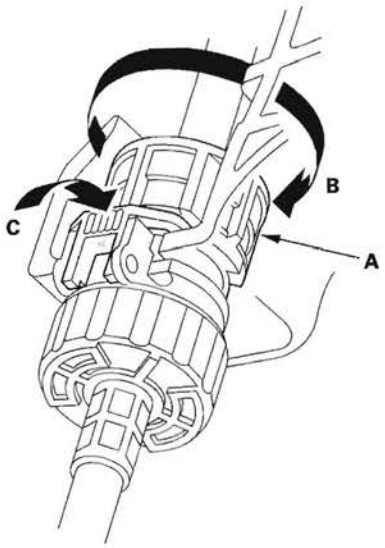

6. Lower the socket holder (A), then slide it to remove the shift cable (B) from the shift cable bracket (C). Do not remove the shift cable by pulling the shift cable guide (D).

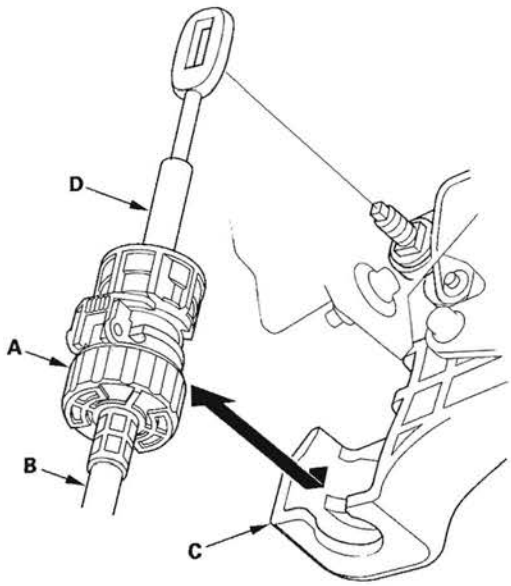

7. Push the shift cable (A) until it stops, then release it. Pull the shift cable back one step so that the shift position is in R. Do not hold the shift cable guide (B) to adjust the shift cable.

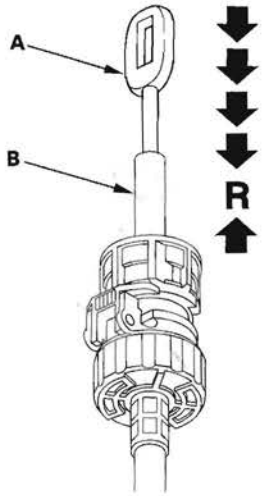

8. Turn the ignition switch ON (II), and verify that the R position indicator comes on.

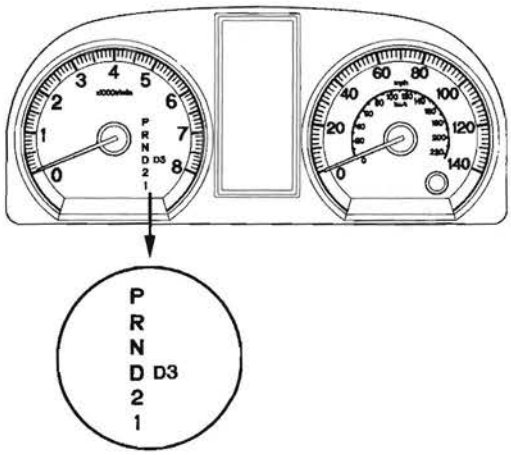

9. Turn the ignition switch OFF.

10. Place the shift lever in the R position, then insert a 6.0 mm (0.24 in.) pin (A) into the positioning hole (B) on the shift lever, through the positioning hole on the shift lever, and into the positioning hole on the bracket. Use only a 6.0 mm pin with no burrs.

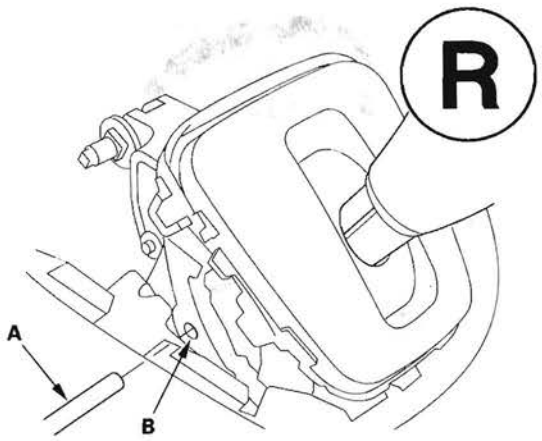

11. Verify that the shift lever is secured in the R position.

12. Unlock the retainer (A).

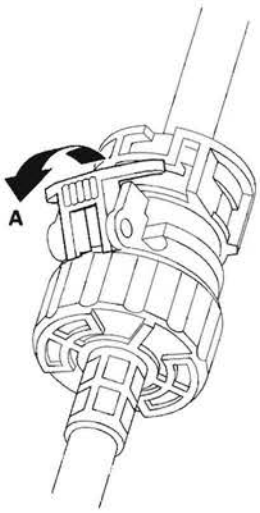

(cont'd)

Shift Cable Adjustment (cont'd)

13. Rotate the socket holder retainer (A) counterclockwise (B) until it stops to create clearance (C) between the socket holder (D) and holder retainer, and push in the retainer (E) to lock it.

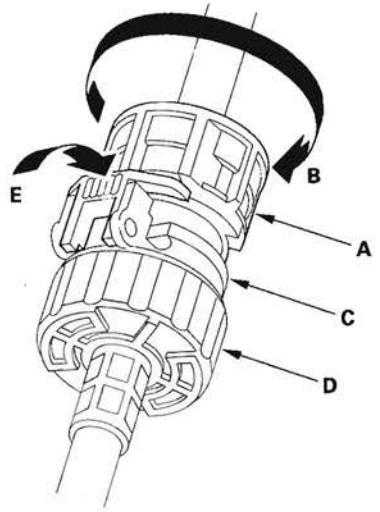

14. Align the clearance (A) between the socket holder (B) and the socket holder retainer (C) with the opening (D) in the shift cable bracket (E), then slide the holder into the bracket with installing the shift cable end (F) over the mounting stud (G) by aligning its square hole (H) with the square fitting (I) at the bottom of the stud. Do not install the shift cable by holding the shift cable guide (J).

    NOTE: When the socket holder is installed in the shift cable bracket, the retainer lock is unhinged and releases the holder retainer lock, then the holder retainer returns under spring force to secure the shift cable.

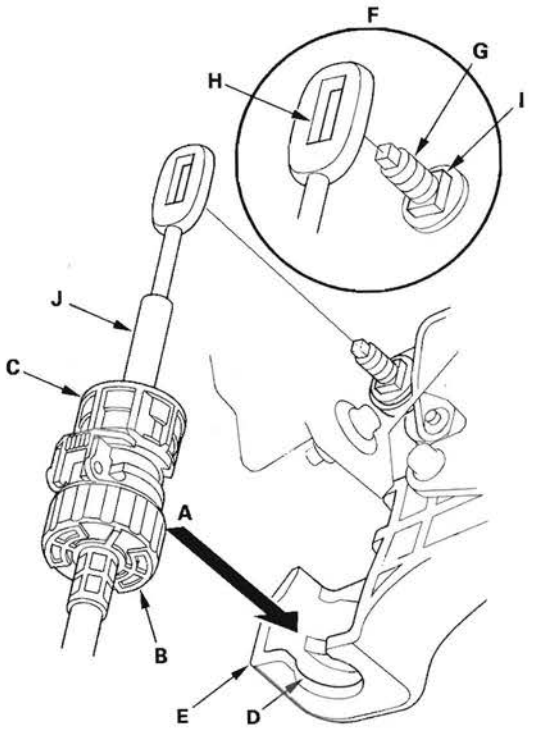

15. Push the retainer lock (A) fully to lock the socket holder retainer (B), and make sure that the retainer lock fits into the hinged-joint (C). If the retainer lock does not fit with the edge of the hinged-joint, rotate the holder retainer counterclockwise while pushing the retainer lock until it locks.

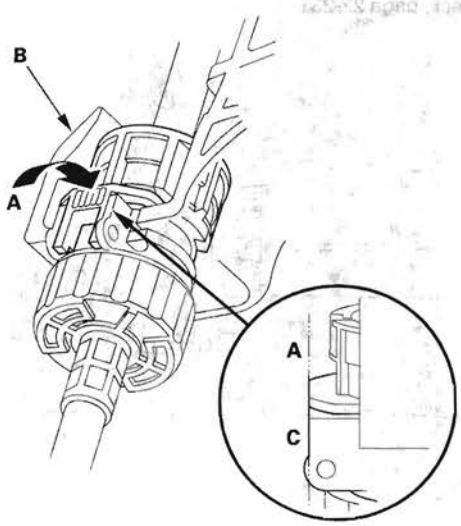

16. Verify that the shift cable end is properly installed on the mounting stud.

Improperly installed:

Cable end positions out of the mounting stud.

Cable end rides on the bottom of the mounting stud.

Properly installed:

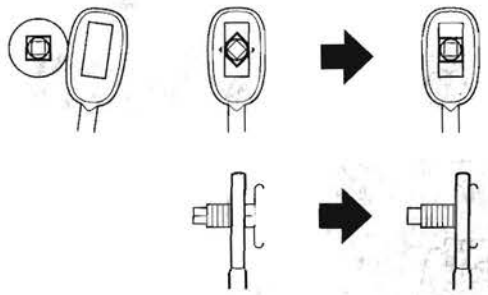

17. If the cable end is out of position on the mounting stud, remove the shift cable from the bracket, and reinstall the shift cable. Do not install the shift cable end on the mounting stud while the shift cable is on the bracket.
If the cable end rides on the bottom of the mounting stud, rotate the stud and align the square fitting with the hole.

18. Install and tighten the nut on the shift cable end.

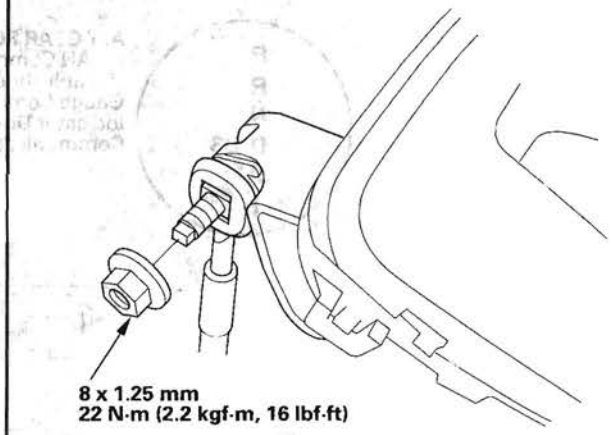

19. Remove the 6.0 mm (0.24 in.) pin that was installed to hold the shift lever.

20. Turn the ignition switch ON (II). Move the shift lever to each position, and verify that the A/T gear position indicator follows the transmission range switch.

21. Shift to the P position, and check that the shift lock works properly. Push the shift lock release, and verify that the shift lever releases, and also check that the shift lever locks when it is shifted back to the P position.

22. Install the following parts:

- Center lower covers (see page 20-95)
- Dashboard center panel (see page 20-93)
- Heater control panel (see page 21-53)

A/T Gear Position Indicator

Component Location Index

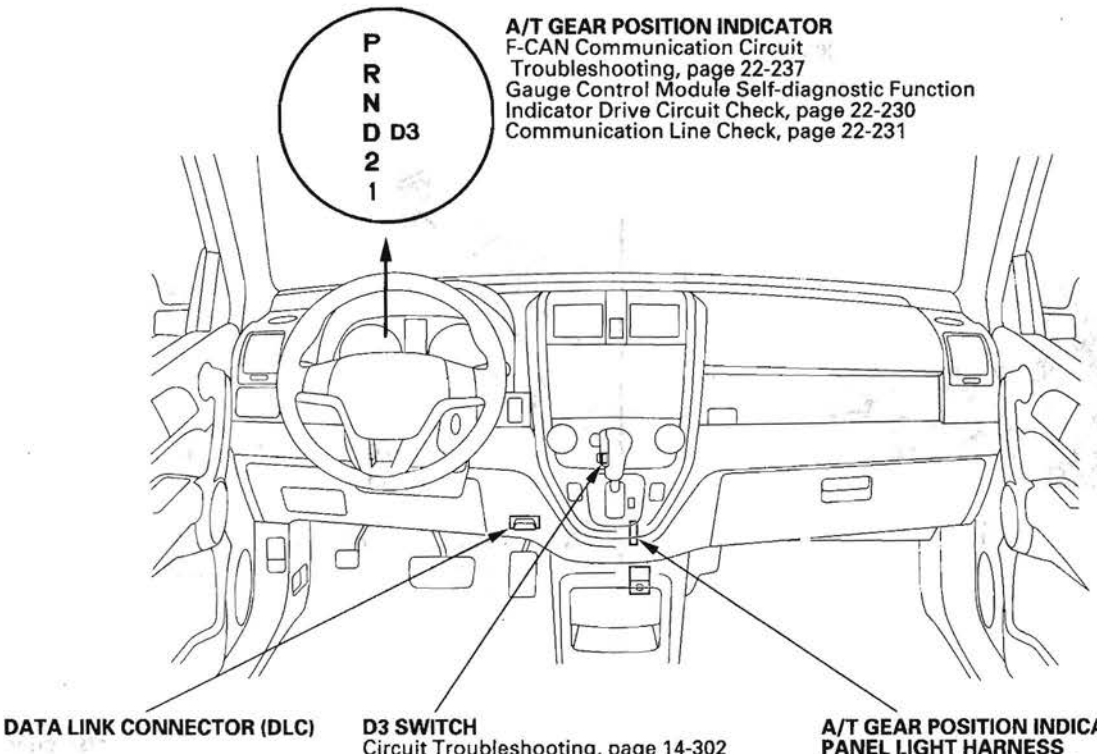

A/T GEAR POSITION INDICATOR
F-CAN Communication Circuit
Troubleshooting, page 22-237
Gauge Control Module Self-diagnostic Function
Indicator Drive Circuit Check, page 22-230
Communication Line Check, page 22-231

DATA LINK CONNECTOR (DLC)

D3 SWITCH
Circuit Troubleshooting, page 14-302
Test, page 14-304
Replacement, page 14-305

A/T GEAR POSITION INDICATOR PANEL LIGHT HARNESS
Replacement, page 14-296
A/T GEAR POSITION INDICATOR PANEL
Replacement, page 14-300

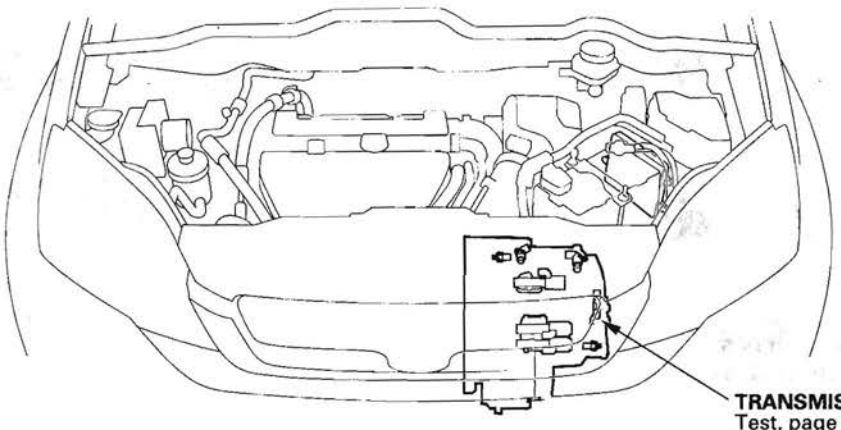

TRANSMISSION RANGE SWITCH
Test, page 14-292
Replacement, page 14-294

Circuit Diagram

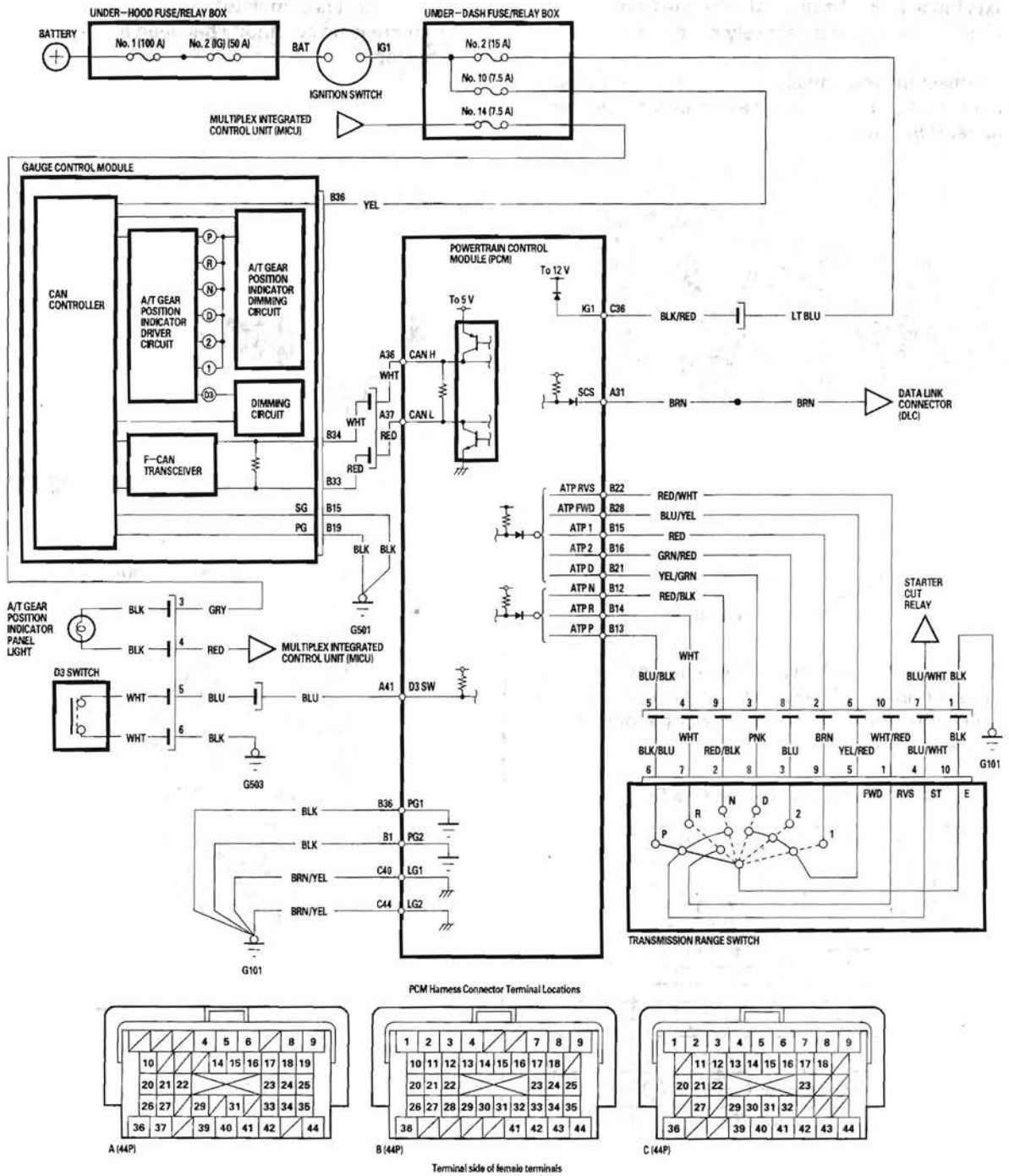

PCM Harness Connector Terminal Locations

Terminal side of female terminals

Transmission Range Switch Test

1. Raise the vehicle on a lift, or apply the parking brake, block rear wheels, and raise the front of the vehicle. Make sure it is securely supported.

2. Disconnect the transmission range switch harness connector (A), and remove the connector from the connector bracket.

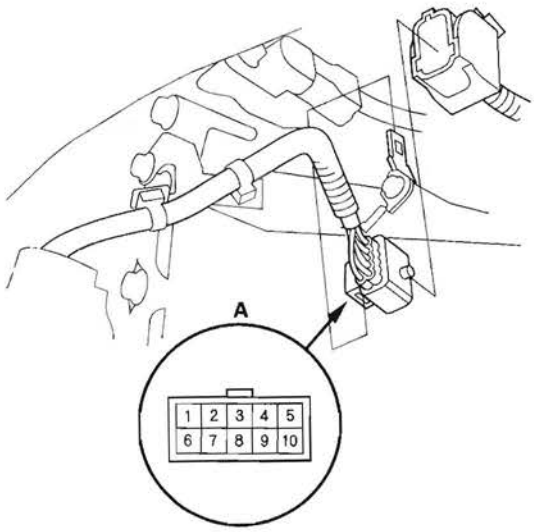

Terminal side of male terminals

3. Check for continuity between terminals at the harness connector. There should be continuity between the terminals in the following table for each switch position.

Transmission Range Switch Harness Connector

Position/Connector Terminal/Signal Connections										
	1	2	3	4	5	6	7	8	9	10
	GND	ATP 1	D	R	P	ATP FWD	ATP NP	ATP 2	N	ATP RVS
P	○				○		○			
R	○			○						○
N	○						○		○	
D	○		○			○				
2	○					○		○		
1	○	○				○				

4. If the test results are OK, the transmission range switch test is complete.
If there is no continuity between any terminals, go to step 5.

5. Remove the transmission range switch cover.

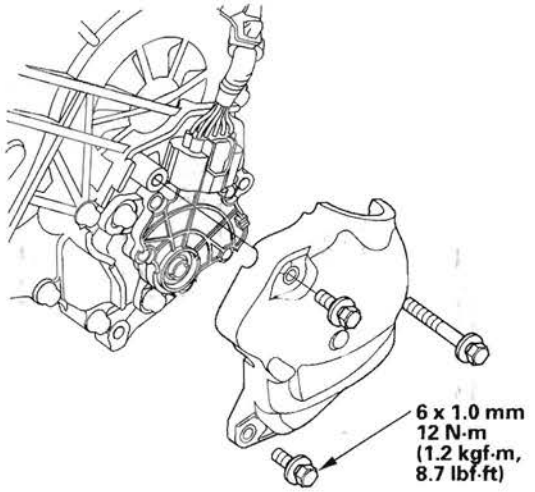

6. Disconnect the transmission range switch connector.

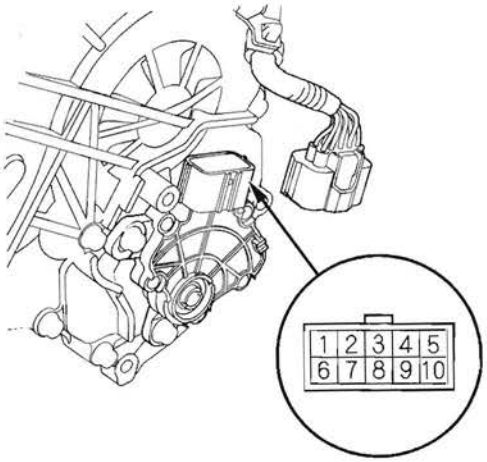

7. Check for continuity between terminals at the switch connector. There should be continuity between the terminals in the following table for each switch position.

Transmission Range Switch Connector

Position/Connector Terminal/Signal Connections										
	1	2	3	4	5	6	7	8	9	10
	ATP RVS	N	ATP 2	ATP NP	ATP FWD	P	R	D	ATP 1	GND
P				○	——	○				○
R	○	——	——	——	——	——	○	——	——	○
N		○	——	○	——	——	——	——	——	○
D					○	——	——	○	——	○
2			○	——	○	——	——	——	——	○
1					○	——	——	——	○	○

8. If the transmission range switch continuity check is OK, remove the harness clamps (A) from the clamp bracket (B), and replace the faulty transmission range switch harness (C).

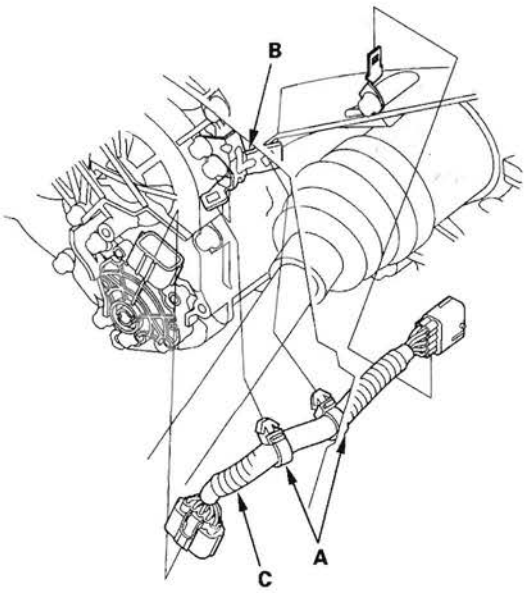

9. If there is no continuity between any terminals, remove the transmission range switch, and check the end of the selector control shaft (A).

Selector Control Shaft Specification
Width (B): 6.1—6.2 mm (0.240—0.244 in.)
End Gap (C): 1.8—2.0 mm (0.07—0.08 in.)

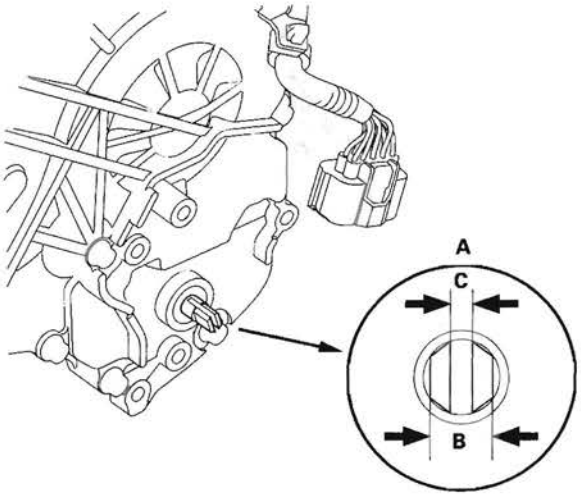

10. If the measurement of the selector control shaft end is within the specification, replace the transmission range switch. If the measurement is out of the specification, repair the selector control shaft end, and recheck the transmission range switch continuity.

Transmission Range Switch Replacement

1. Raise the vehicle on a lift, or apply the parking brake, block rear wheels, and raise the front of the vehicle. Make sure it is securely supported.
2. Shift the N position.
3. Remove the transmission range switch cover.

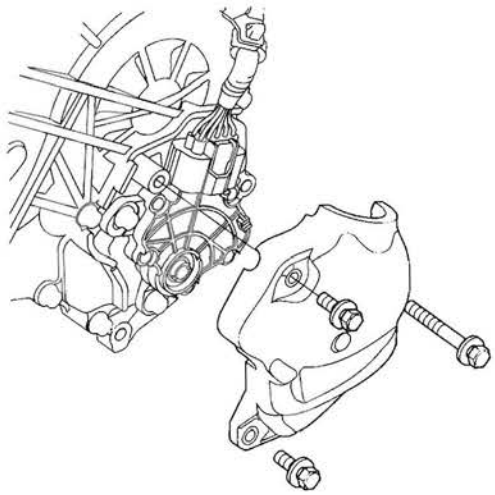

4. Remove the transmission range switch.

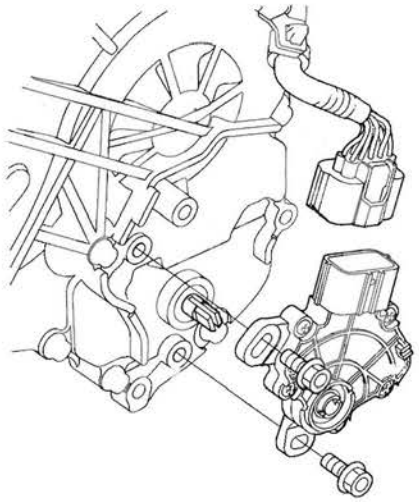

5. Make sure the control shaft is in the N position. If necessary, move the shift lever to the N position.

   NOTE: Do not use the selector control shaft to adjust the shift position. If the control shaft tips are squeezed together it will cause a faulty signal or position due to play between the selector control shaft and switch.

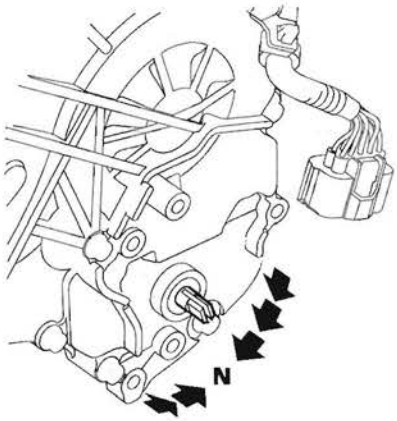

6. Align the cutouts (A) on the rotary-frame with the neutral positioning cutouts (B) on the transmission range switch (C), then put a 2.0 mm (0.08 in.) feeler gauge blade (D) in the cutouts to hold the switch in the N position.

   NOTE: Be sure to use a 2.0 mm (0.08 in.) blade or equivalent to hold the switch in the N position.

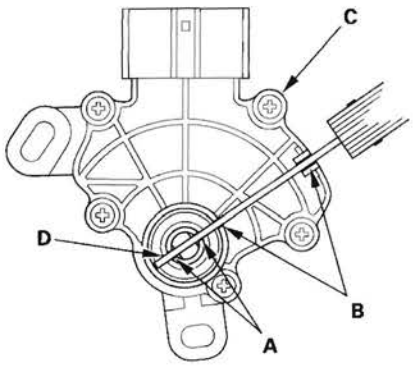

7. Install the transmission range switch (A) gently on the selector control shaft (B) while holding it in the N position with the 2.0 mm (0.08 in.) blade (C).

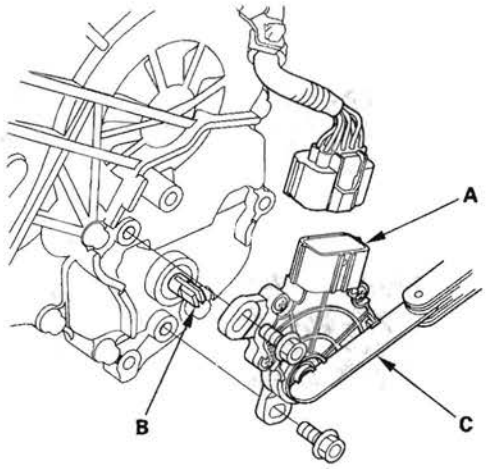

8. Tighten the bolts on the transmission range switch while you continue to hold the N position. Do not move the transmission range switch when tightening the bolts. Remove the feeler gauge.

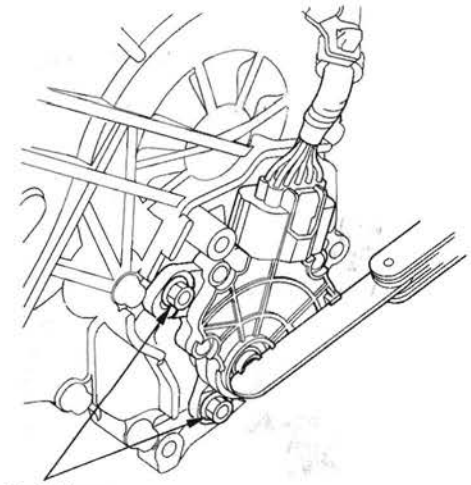

9. Check the connectors for rust, dirt, or oil, then connect the connector securely.
10. Turn the ignition switch ON (II). Move the shift lever through all positions, and make sure the transmission range switch is synchronized with the A/T gear position indicator.
11. Make sure the engine will start in the P and N positions, and will not start in any other shift lever position.
12. Make sure the back-up lights come on when the shift lever is in the R position.
13. Allow the all four wheels (4WD model) or the front wheels (2WD model) to rotate freely, then start the engine, and check the shift lever operation.
14. Install the transmission range switch cover.

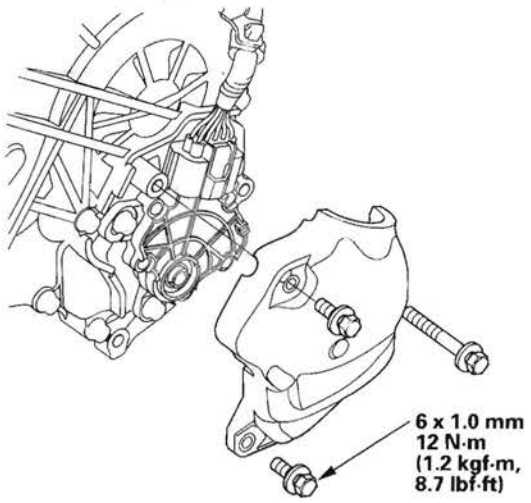

A/T Gear Position Indicator Panel Light Harness Replacement

NOTE:
- The A/T gear position indicator panel light harness is not available from the park pin switch and D3 switch connector harness; replace the A/T gear position indicator panel light harness, park pin switch, D3 switch connector harness, and the connector as a set.
- Refer to the Shift Lever Disassembly and Reassembly (see page 14-275) as needed during the following procedures.

1. Remove the shift lever (see page 14-272).
2. Wrap the end of a flat-tip screwdriver (A) with tape, pry the shift lever knob cover locks (B), and remove the shift lever knob cover (C).

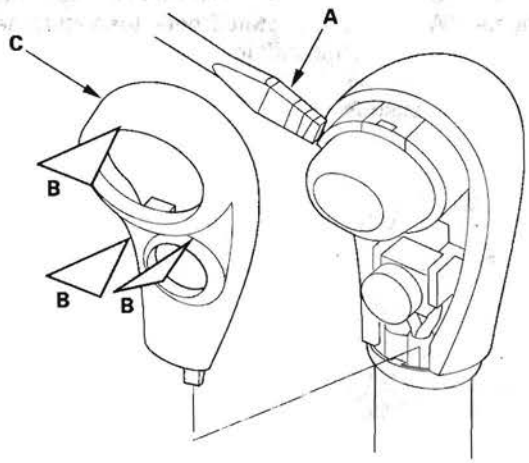

3. Remove the screws (A), shift lever button (B), and spring (C).

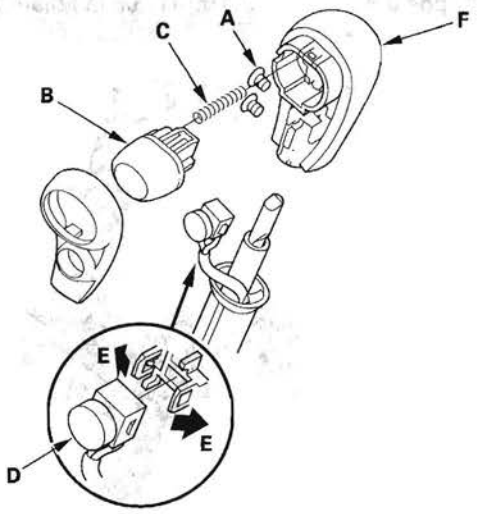

4. Remove the D3 switch (D) by expanding its locks (E) from the shift lever knob, and remove the shift lever knob (F).
5. Remove the shift lock solenoid connector and D3 switch/park pin switch/A/T gear position indicator panel light connector from the shift lever.
6. Remove the harness bands, and disconnect the D3 switch 2P connector.

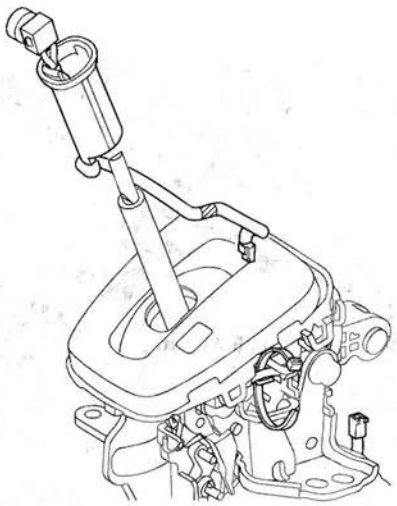

7. Remove the D3 switch harness and shift lever ring.

8. Remove the A/T gear position indicator panel light socket from the indicator panel, and remove the indicator panel.

9. Release the lock (A) of the shift lock release, and remove the shift lock release and release spring (B).

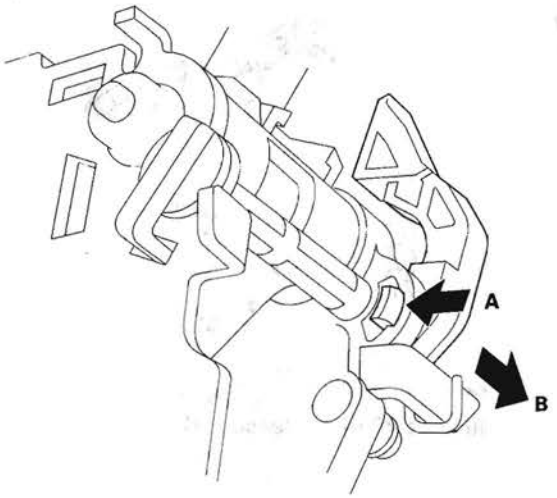

10. Remove the shift lever mounting bracket, and remove the park pin switch.

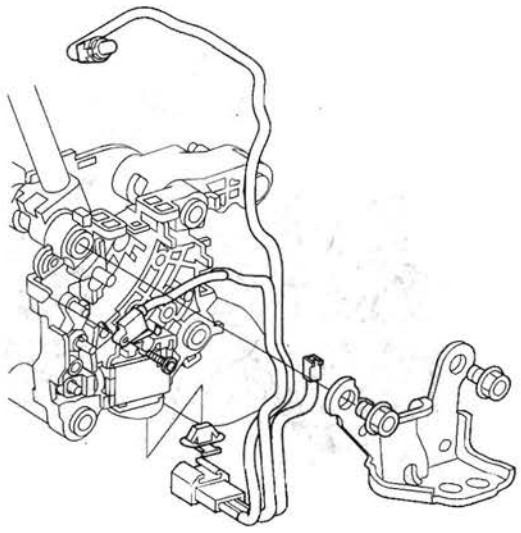

11. Remove the A/T gear position indicator panel light harness, park pin switch, D3 switch connector harness, and connector assembly, and replace it.

12. Apply non-hardening thread lock sealant to the screw threads. Install the park pin switch (A), and secure the switch with the screw.

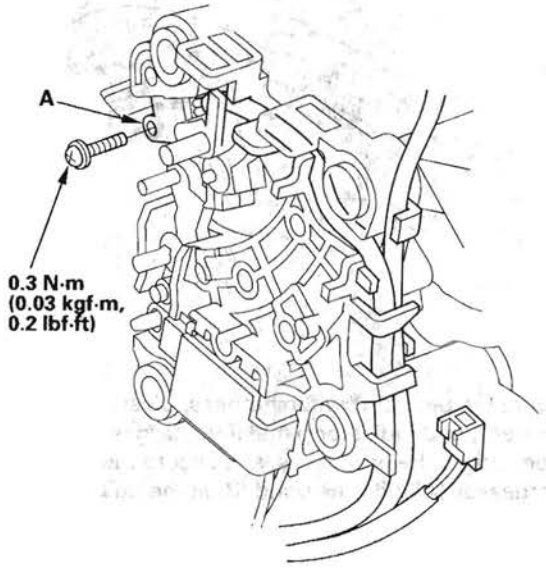

13. Install the shift lever mounting bracket.

14. Install the A/T gear position indicator panel, shift lever ring, and D3 switch harness.

15. Route the D3 switch harness (A), connect the D3 switch 2P connector (B), and install the connector in the holder.

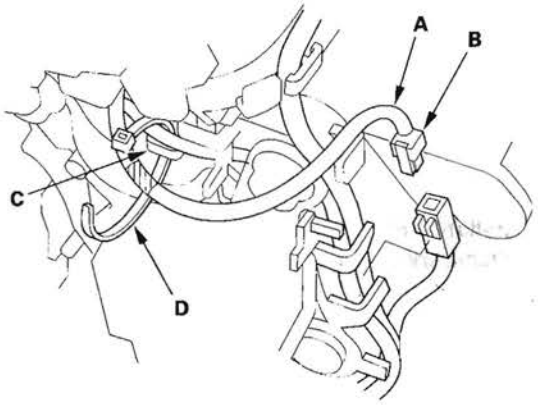

16. Tie the harnesses of the D3 switch and park pin switch at the guide (C) with the band (D).

(cont'd)

A/T Gear Position Indicator Panel Light Harness Replacement (cont'd)

17. Install the A/T gear position indicator panel light socket in the indicator panel.

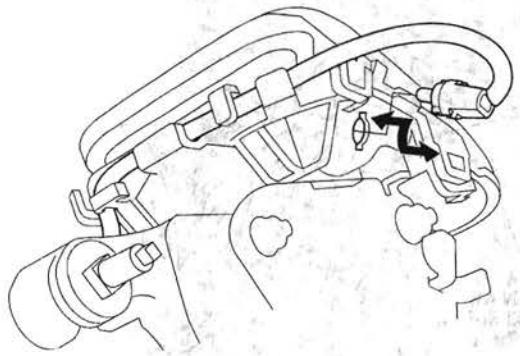

18. Route the park pin switch harness, D3 switch harness, and indicator panel light harness. Take a slack out of the harnesses, and secure the harnesses (A) with the band (B) at the guide (C).

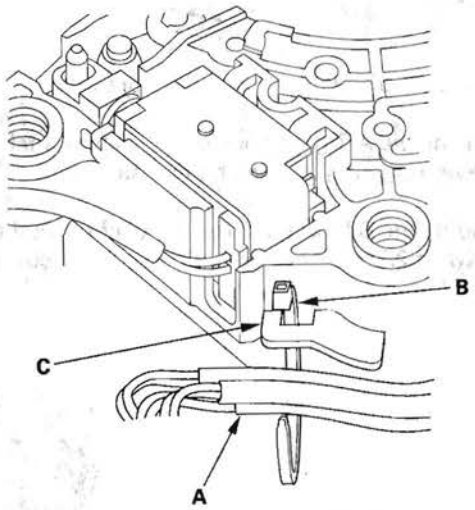

19. Install the shift lock solenoid connector and D3 switch/park pin switch/A/T gear position indicator panel light connector on the shift lever.

20. Install the shift lock release spring (A) in the shift lock release (B).

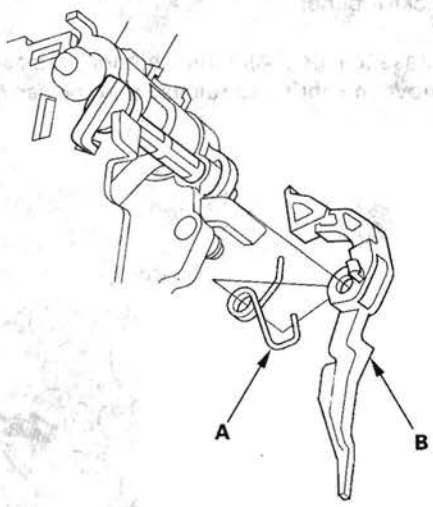

21. Install the shift lock release and release spring on the release shaft end.

22. Make sure that the release spring end (A) is installed in the shift lock release (B), and the hooked end (C) is hitched on the catch (D).

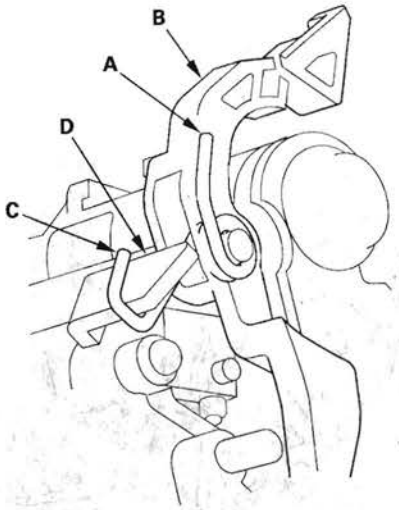

23. Apply silicone grease to the top of the shift lever rod (A), to the shift lever button spring (B), and to the area of the shift lever button (C) connected with the shift lever rod.

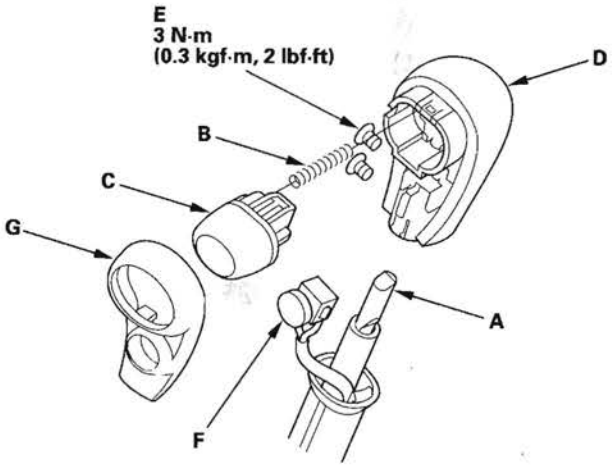

24. Install the shift lever button spring and button in the shift lever knob (D), and install the shift lever knob over the shift lever.

25. Apply non-hardening thread lock sealant to the screw threads, and secure the shift lever knob with the screws (E).

26. Install the D3 switch (F) and shift lever knob cover (G) on the shift lever knob.

27. Install the shift lever (see page 14-274).

A/T Gear Position Indicator Panel Assembly Replacement

NOTE: Refer to the Shift Lever Disassembly and Reassembly (see page 14-275) as needed during the following procedures.

1. Remove the shift lever (see page 14-272).
2. Wrap the end of a flat-tip screwdriver (A) with tape, pry the shift lever knob cover locks (B), and remove the shift lever knob cover (C).

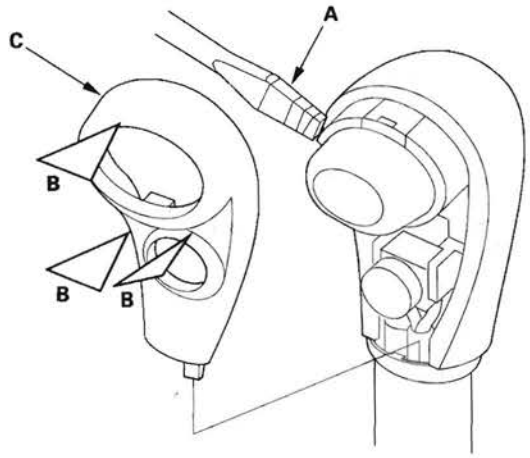

3. Remove the screws (A), shift lever button (B), and spring (C).

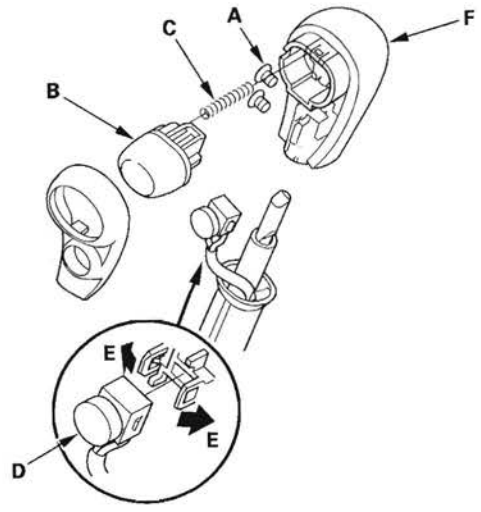

4. Remove the D3 switch (D) by expanding its locks (E) from the shift lever knob, and remove the shift lever knob (F).
5. Remove the harness band, and disconnect the D3 switch 2P connector (A).

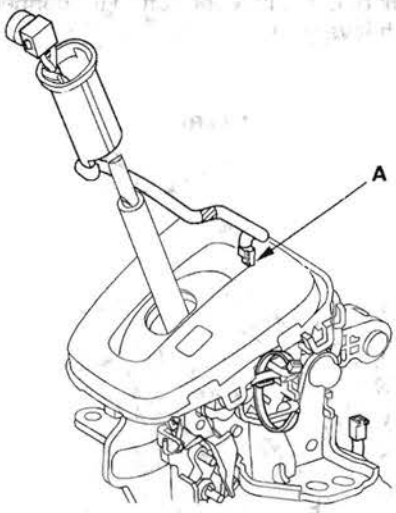

6. Remove the D3 switch harness and shift lever ring.
7. Remove the A/T gear position indicator panel light socket from the indicator panel.
8. Remove the A/T gear position indicator panel, and disassemble the indicator panel (A), panel base (B), and lever cover (C).

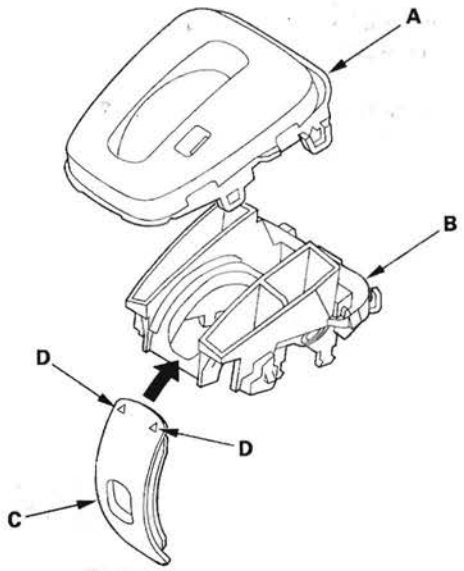

9. Replace the indicator panel, panel base, or lever cover, and assemble the A/T gear position indicator panel; install the lever cover in the panel base with the marks (D) point toward the front.

10. Install the A/T gear position indicator panel, and install the shift lever ring and D3 switch harness.

11. Route the D3 switch harness (A), connect the D3 switch 2P connector (B), and install the connector in the holder.

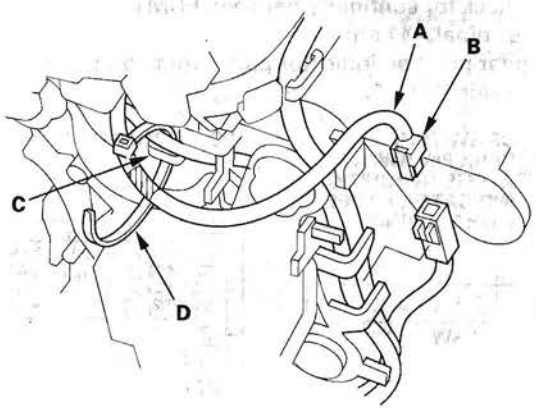

12. Tie the harnesses of the D3 switch and park pin switch at the guide (C) with the band (D).

13. Install the A/T gear position indicator panel light socket in the indicator panel.

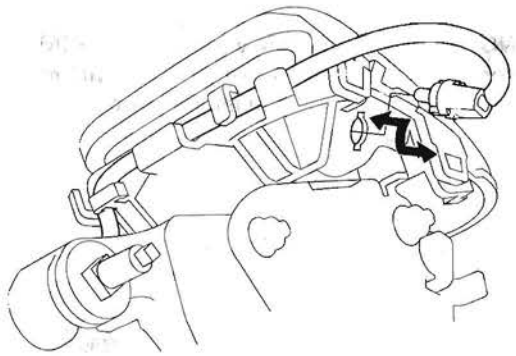

14. Apply silicone grease to the top of the shift lever rod (A), to the shift lever button spring (B), and to the area of the shift lever button (C) connected with the shift lever rod.

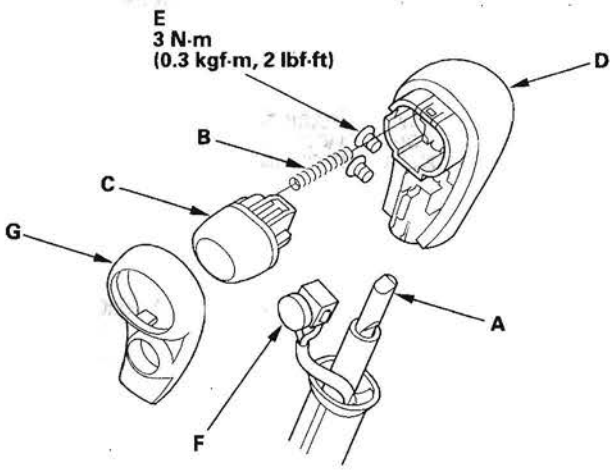

15. Install the shift lever button spring and button in the shift lever knob (D), and install the shift lever knob over the shift lever.

16. Apply non-hardening thread lock sealant to the screw threads, and secure the shift lever knob with the screws (E).

17. Install the D3 switch (F) and shift lever knob cover (G) on the shift lever knob.

18. Install the shift lever (see page 14-274).

D3 Switch Circuit Troubleshooting

1. Remove the shift lever (see page 14-272).
2. Turn the ignition switch ON (II).
3. Measure the voltage between D3 switch/park pin switch/A/T gear position indicator panel light connector terminals No. 5 and No. 6.

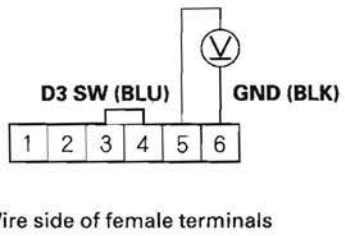

Is there about 5 V?

YES—Go to step 10.

NO—Go to step 4.

4. Measure the voltage between D3 switch/park pin switch/A/T gear position indicator panel light connector terminal No. 5 and body ground.

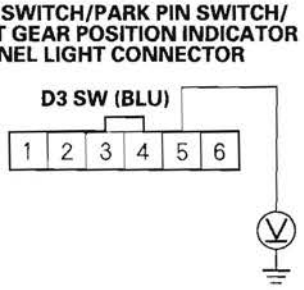

Is there about 5 V?

YES—Repair open in the wire between D3 switch/park pin switch/A/T gear position indicator panel light connector terminal No. 6 and ground (G503), and repair poor ground (G503). ■

NO—Go to step 5.

5. Turn the ignition switch OFF.
6. Jump the SCS line with the HDS.
7. Disconnect PCM connector A (44P).
8. Check for continuity between PCM connector terminal A41 and D3 switch/park pin switch/A/T gear position indicator panel light connector terminal No. 5.

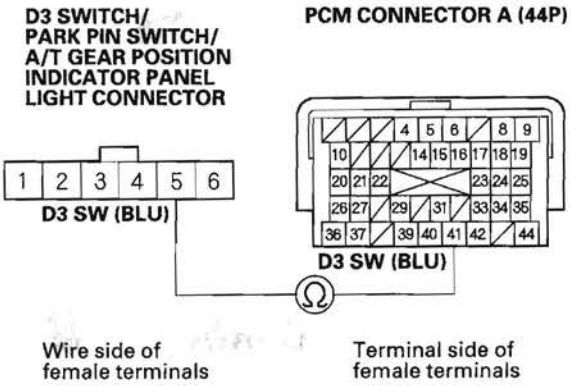

Is there continuity?

YES—Go to step 9.

NO—Repair open in the wire between PCM connector terminal A41 and the D3 switch/park pin switch/A/T gear position indicator panel light connector. ■

9. Check for continuity between D3 switch/park pin switch/A/T gear position indicator panel light connector terminal No. 5 and body ground.

D3 SWITCH/PARK PIN SWITCH/ A/T GEAR POSITION INDICATOR PANEL LIGHT CONNECTOR

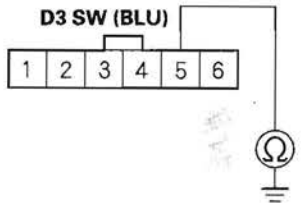

Wire side of female terminals

Is there continuity?

YES—Repair short in the wire between PCM connector terminal A41 and the D3 switch/park pin switch/A/T gear position indicator panel light connector. ■

NO—Check for loose or poor connection at PCM connector terminal A41. If the connection is OK, substitute a known-good PCM (see page 14-10) and recheck. If the symptom goes away with a known-good PCM, replace the original PCM (see page 11-219). ■

10. Check for continuity between D3 switch/park pin switch/A/T gear position indicator panel light connector terminals No. 5 and No. 6 while pressing the D3 switch several times.

D3 SWITCH/PARK PIN SWITCH/ A/T GEAR POSITION INDICATOR PANEL LIGHT CONNECTOR

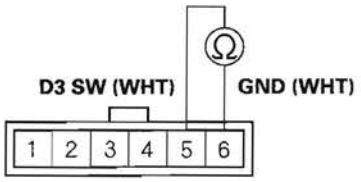

Terminal side of male terminals

Is there alternating continuity and no continuity every time the switch is pushed?

YES—Check for loose or poor connection at PCM connector terminal A41. If the connection is OK, substitute a known-good PCM (see page 14-10) and recheck. If the symptom goes away with a known-good PCM, replace the original PCM (see page 11-219). ■

NO—Replace the D3 switch (see page 14-305). ■

D3 Switch Test

1. Remove the center lower covers (see page 20-95).
2. Disconnect D3 switch/park pin switch/A/T gear position indicator panel light connector.

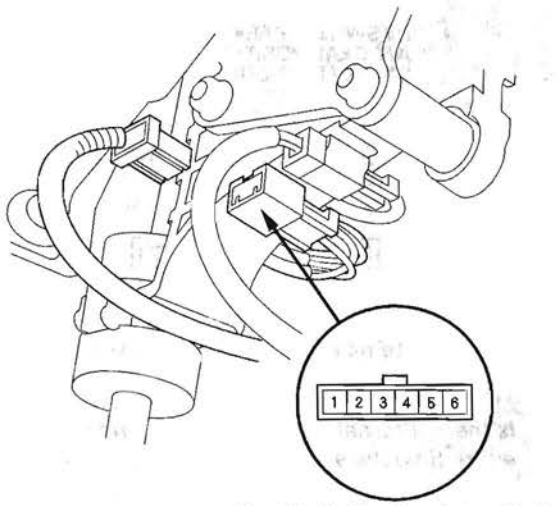

Terminal side of male terminals

3. Push the D3 switch several times, and check the switch for continuity between D3 switch/park pin switch/A/T gear position indicator panel light connector terminals No. 5 and No. 6. There should be toggled continuity and no continuity between terminals every time the D3 switch is pushed.
4. D3 switch test is finished if the test result is OK. If the D3 switch works incorrectly at the D3 switch/park pin switch/A/T gear position indicator panel light connector, test the D3 switch at the D3 switch 2P connector.
5. Remove the shift lever (see page 14-272).
6. Remove the D3 switch 2P connector from the connector holder, and disconnect it.

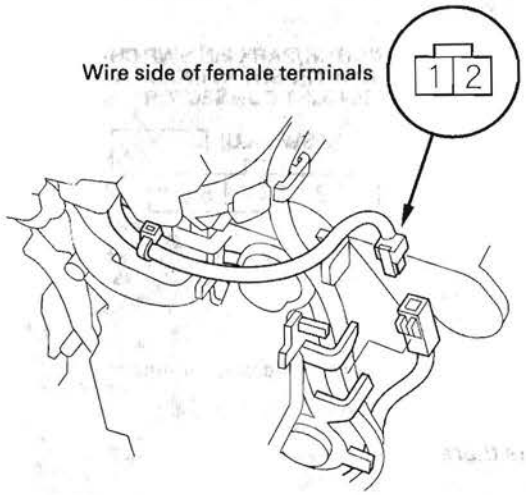

7. Push the D3 switch several times, and check the switch for continuity between D3 switch 2P connector terminals No. 1 and No. 2. There should be toggled continuity and no continuity between terminals every time the D3 switch is pushed.
8. Replace the D3 switch (see page 14-305) if the switch works incorrectly.
9. Replace the D3 switch connector harness, A/T gear position indicator panel light harness, and park pin switch as a set (see page 14-296) if the switch is OK. The D3 switch connector harness is not available from the A/T gear position indicator panel light harness and park pin switch.
10. Connect the 2P connector, and install it in the holder.
11. Install the shift lever (see page 14-274).
12. Install the center lower covers (see page 20-95).

D3 Switch Replacement

NOTE: Refer to the Shift Lever Disassembly and Reassembly (see page 14-275) as needed during the following procedures.

1. Remove the shift lever (see page 14-272).

2. Wrap the end of a flat-tip screwdriver (A) with tape, pry the shift lever knob cover locks (B), and remove the shift lever knob cover (C).

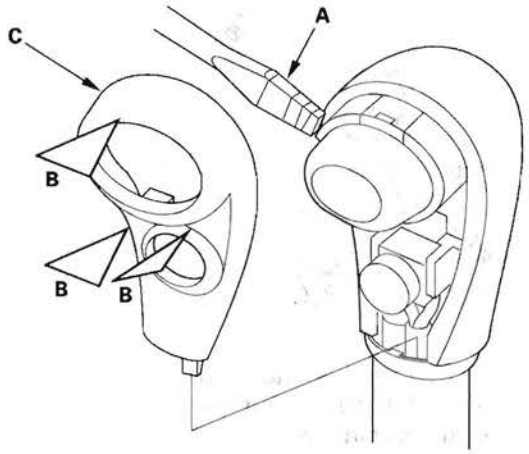

3. Remove the screws (A), shift lever button (B), and spring (C).

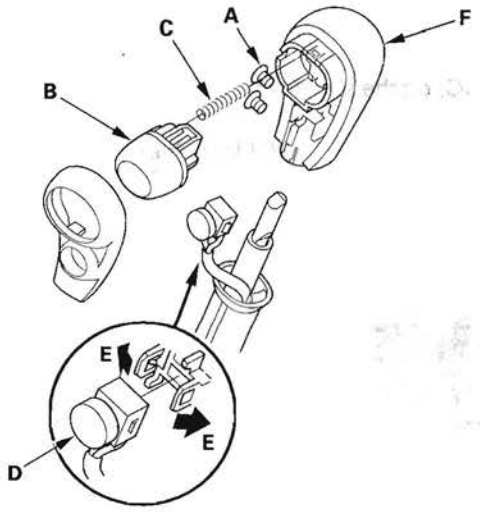

4. Remove the D3 switch (D) by expanding its locks (E) from the shift lever knob, and remove the shift lever knob (F).

5. Remove the harness band, and disconnect the D3 switch 2P connector (A).

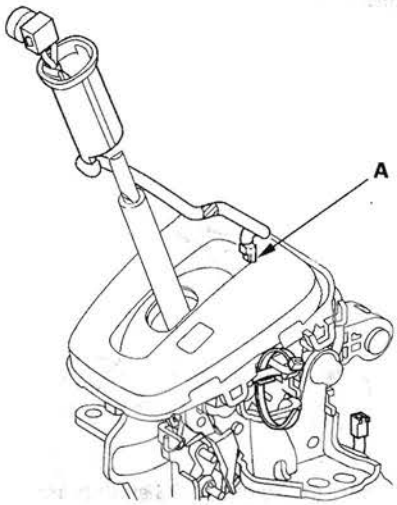

6. Remove the D3 switch and shift lever ring.

7. Replace the D3 switch, and install the D3 switch harness through the shift lever ring.

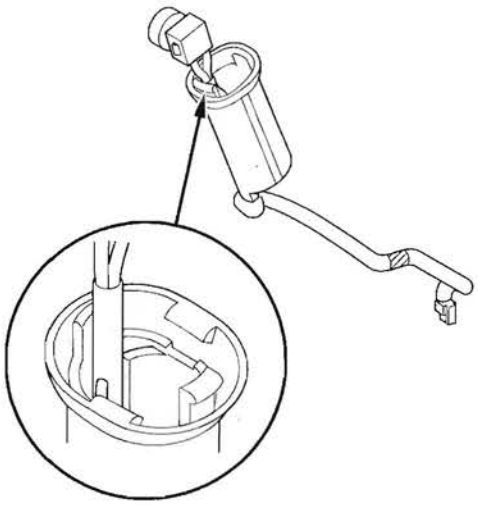

8. Install the shift lever ring over the shift lever.

(cont'd)

D3 Switch Replacement (cont'd)

9. Route the D3 switch harness (A), connect the D3 switch 2P connector (B), and install the connector in the holder.

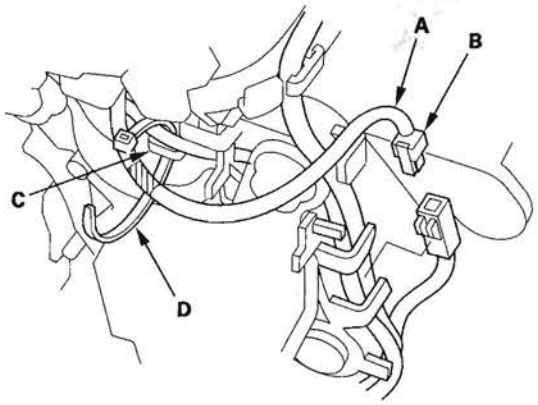

10. Tie the harnesses of the D3 switch and park pin switch at the guide (C) with the band (D).

11. Apply silicone grease to the top of the shift lever rod (A), to the shift lever button spring (B), and to the area of the shift lever button (C) connected with the shift lever rod.

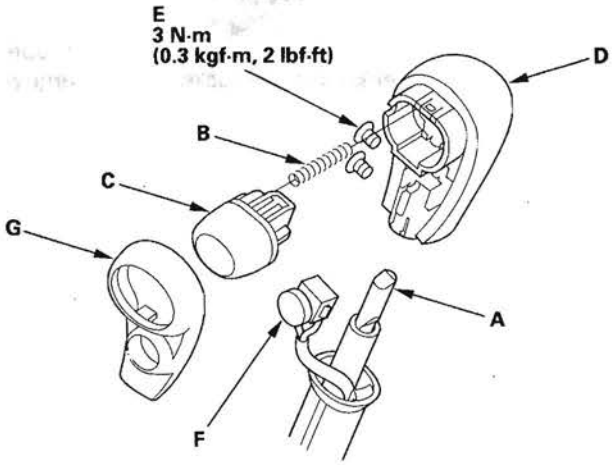

12. Install the shift lever button spring and button in the shift lever knob (D), and install the shift lever knob over the shift lever.

13. Apply non-hardening thread lock sealant to the screw threads, and secure the shift lever knob with the screws (E).

14. Install the D3 switch (F) and shift lever knob cover (G) on the shift lever knob.

15. Install the shift lever (see page 14-274).

Component Location Index

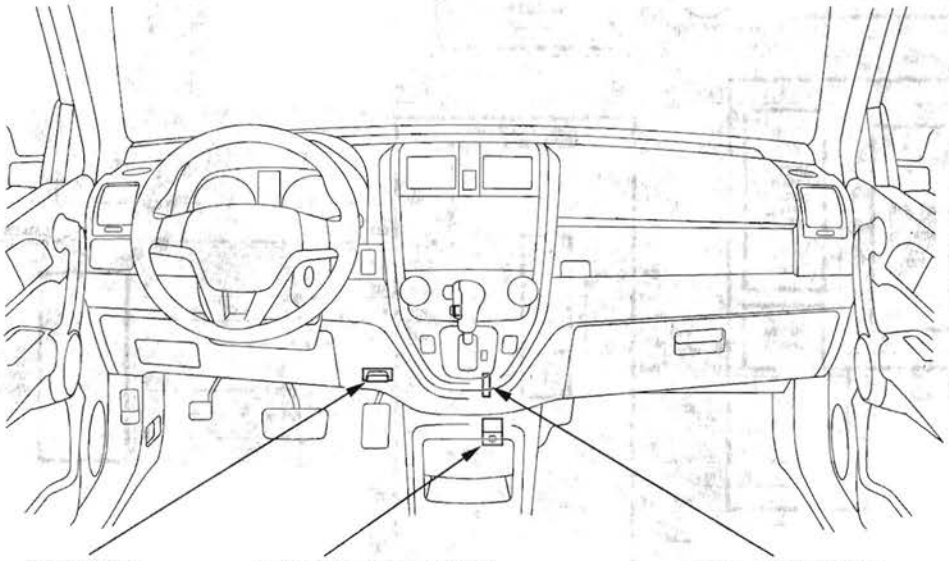

DATA LINK CONNECTOR (DLC)

SHIFT LOCK SOLENOID
Shift Lock System Circuit Troubleshooting, page 14-309
Test, page 14-316
Replacement, page 14-317

PARK PIN SWITCH
Key Interlock System Circuit Troubleshooting, page 14-314
Test, page 14-320
Replacement, page 14-320

STEERING LOCK ASSEMBLY KEY INTERLOCK SOLENOID
Key Interlock System Circuit Troubleshooting, page 14-314

A/T Interlock System

Circuit Diagram

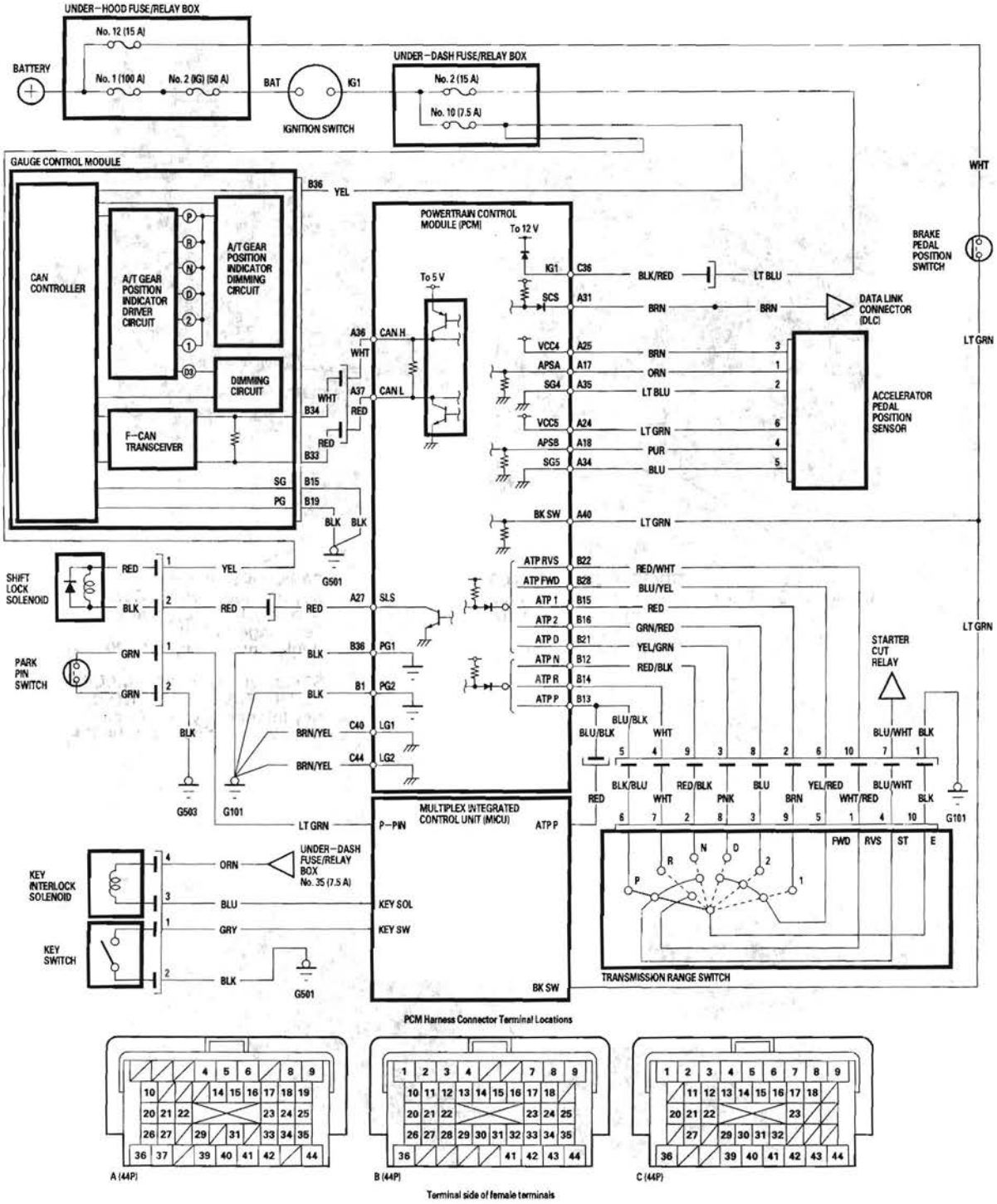

Shift Lock System Circuit Troubleshooting

1. Connect the HDS to the DLC.
2. Select Shift Lock Solenoid Test in the Miscellaneous Test Menu, and check that the shift lock solenoid operates with the HDS.

   NOTE: If the HDS does not communicate with the PCM, troubleshoot the DLC circuit (see page 11-197).

   Does the shift lock solenoid work properly?

   YES—Go to step 14.

   NO—Go to step 3.
3. Remove the center lower covers (see page 20-95).
4. Disconnect the shift lock solenoid connector.
5. Turn the ignition switch ON (II).
6. Measure the voltage between shift lock solenoid connector terminal No. 1 and body ground.

SHIFT LOCK SOLENOID CONNECTOR

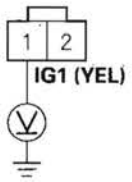

Wire side of female terminals

Is there battery voltage?

YES—Go to step 7.

NO—Check for a blown No. 10 (7.5 A) fuse in the under-dash fuse/relay box. If the fuse is OK, repair open or short in the wire between shift lock solenoid connector terminal No. 1 and the under-dash fuse/relay box. ■

7. Shift the shift lever into the P position, and press the brake pedal. Do not press the accelerator.
8. Measure the voltage between shift lock solenoid connector terminals No. 1 and No. 2 while pressing the brake pedal.

SHIFT LOCK SOLENOID CONNECTOR

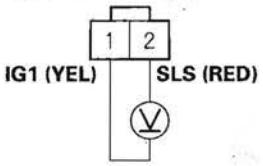

Wire side of female terminals

Is there battery voltage?

YES—Go to step 9.

NO—Go to step 10.

(cont'd)

Shift Lock System Circuit Troubleshooting (cont'd)

9. Release the brake pedal, and measure the voltage between connector terminals No. 1 and No. 2. The shift lever must be in the P position.

SHIFT LOCK SOLENOID CONNECTOR

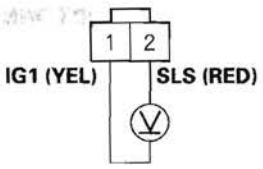

Wire side of female terminals

Is there battery voltage?

YES—Repair short in the wire between PCM connector terminal A27 and the shift lock solenoid. ■

NO—Check the shift lock mechanism. If the mechanism is OK, replace the shift lock solenoid (see page 14-317). ■

10. Turn the ignition switch OFF.
11. Jump the SCS line with the HDS.
12. Disconnect PCM connector A (44P).
13. Check for continuity between PCM connector terminal A27 and shift lock solenoid connector terminal No. 2.

SHIFT LOCK SOLENOID CONNECTOR **PCM CONNECTOR A (44P)**

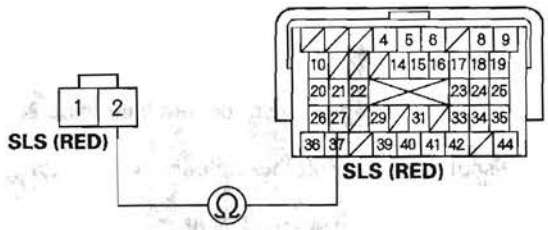

Wire side of female terminals

Terminal side of female terminals

Is there continuity?

YES—Substitute a known-good PCM (see page 14-10) and recheck. ■

NO—Repair open in the wire between PCM connector terminal A27 and the shift lock solenoid. ■

14. Press the brake pedal.

Are the brake lights ON?

YES—Go to step 15.

NO—Repair faulty brake light circuit. ■

15. Turn the ignition switch OFF.

16. Jump the SCS line with the HDS.

17. Disconnect PCM connector A (44P).

18. Measure the voltage between PCM connector terminal A40 and body ground while pressing the brake pedal and when the brake pedal is released.

PCM CONNECTOR A (44P)

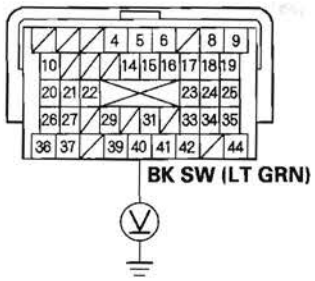

Terminal side of female terminals

Is there battery voltage while the brake pedal is pressed, and no voltage when the pedal is released?

YES—Go to step 20.

NO—Go to step 19.

19. Disconnect brake pedal position switch 4P connector, and check for continuity between PCM connector terminal A40 and brake pedal position switch 4P connector terminal No. 2.

BRAKE PEDAL POSITION SWITCH 4P CONNECTOR

PCM CONNECTOR A (44P)

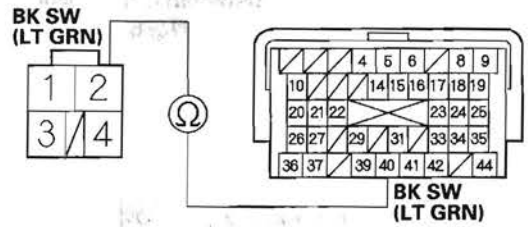

Wire side of female terminals

Terminal side of female terminals

Is there continuity?

YES—Substitute a known-good PCM (see page 14-10) and recheck. ■

NO—Repair open in the wire between PCM connector terminal A40 and the brake pedal position switch. ■

(cont'd)

Shift Lock System Circuit Troubleshooting (cont'd)

20. Connect PCM connector A (44P).
21. Disconnect the transmission range switch connector.
22. Turn the ignition switch ON (II).
23. Measure the voltage between transmission range switch connector terminals No. 6 and No. 10.

TRANSMISSION RANGE SWITCH CONNECTOR

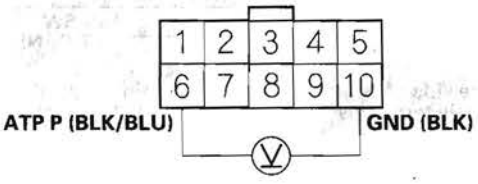

Wire side of female terminals

Is there about 5 V?

YES—Go to step 28.

NO—Go to step 24.

24. Turn the ignition switch OFF.
25. Disconnect PCM connector B (44P).
26. Check for continuity between PCM connector terminal B13 and body ground.

PCM CONNECTOR B (44P)

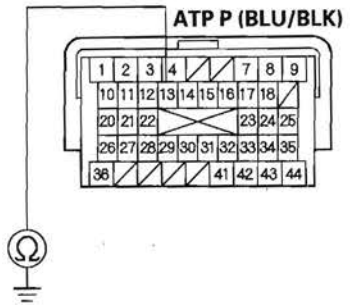

Terminal side of female terminals

Is there continuity?

YES—Repair short in the wire between PCM connector terminal B13 and the transmission range switch connector. ■

NO—Go to step 27.

27. Check for continuity between PCM connector terminal B13 and transmission range switch connector terminal No. 6.

PCM CONNECTOR B (44P) **TRANSMISSION RANGE SWITCH CONNECTOR**

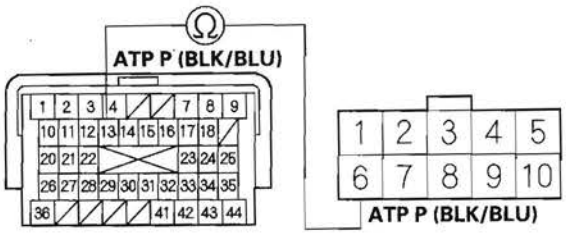

Terminal side of female terminals

Wire side of female terminals

Is there continuity?

YES—Go to step 28.

NO—Repair open in the wire between PCM connector terminal B13 and the transmission range switch connector. ■

28. Check for continuity between transmission range switch connector terminal No. 10 and body ground.

TRANSMISSION RANGE SWITCH CONNECTOR

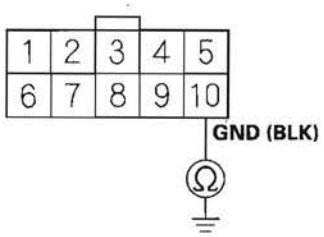

Wire side of female terminals

Is there continuity?

YES—Substitute a known-good PCM (see page 14-10) and recheck.■

NO—Repair open in the wire between transmission range switch connector terminal No. 10 and ground (G101), or repair poor ground (G101).■

29. Test the transmission range switch (see page 14-292).

Is the switch OK?

YES—Go to step 30.

NO—Replace the transmission range switch (see page 14-294).■

30. Connect the HDS to the DLC.

31. Check the accelerator pedal position sensor 1 in the data list with the HDS. Do not press the accelerator.

Is the accelerator pedal position sensor 1 opening 11 % and above, or the sensor 1 voltage 0.90 V and above?

YES—Check the throttle body (see page 11-338).■

NO—Substitute a known-good PCM (see page 14-10) and recheck.■

Key Interlock System Circuit Troubleshooting

SRS components are located in this area. Review the SRS component locations (see page 24-13) and the precautions and procedures (see page 24-15) before doing repair or service.

1. Turn the ignition switch to ACC (I). The shift lever must be in the P position.
2. Disconnect the ignition key switch (6P) connector (see page 22-32).
3. Check if the ignition switch can be turned to the LOCK (0) position.

   Can the ignition switch be turned the LOCK (0) position?

   YES—Go to step 4.

   NO—Replace the ignition key switch/steering lock assembly (see page 17-30). ■
4. Turn the ignition switch OFF.
5. Move the shift lever into any position other than P.
6. Check for continuity between the ignition key switch connector terminal No. 3 and body ground.

IGNITION KEY SWITCH (6P) CONNECTOR

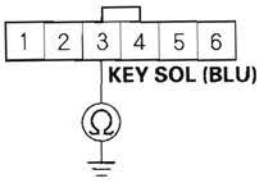

Wire side of female terminals

Is there continuity?

YES—Repair a short in the wire between the key interlock solenoid and the MICU. ■

NO—Go to step 7.

7. Remove the shift lever (see page 14-272).
8. Check for continuity between D3 switch/park pin switch/A/T gear position indicator panel light connector terminal No. 1 and body ground.

D3 SWITCH/PARK PIN SWITCH/ A/T GEAR POSITION INDICATOR PANEL LIGHT CONNECTOR

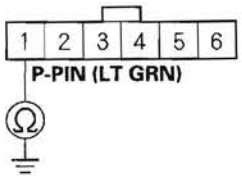

Wire side of female terminals

Is there continuity?

YES—Repair short in the wire between D3 switch/ park pin switch/A/T gear position indicator panel light connector terminal No. 1 and the MICU. ■

NO—Go to step 9.

9. Move the shift lever into the P position.
10. Check for continuity between D3 switch/park pin switch/A/T gear position indicator panel light connector terminals No. 1 and No. 2. Do not push the shift lever button.

D3 SWITCH/PARK PIN SWITCH/ A/T GEAR POSITION INDICATOR PANEL LIGHT CONNECTOR

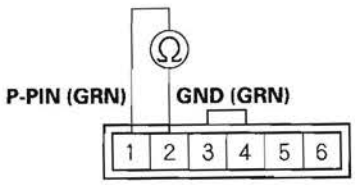

Terminal side of male terminals

Is there continuity?

YES—Replace the park pin switch (see page 14-320). ■

NO—Go to step 11.

11. Disconnect the F (34P) connector from the under-dash fuse/relay box (see page 22-57).

12. Turn the ignition switch ON (II).

13. Measure the voltage between under-dash fuse/relay box F (34P) connector terminal No. 27 and body ground.

UNDER-DASH FUSE/RELAY BOX F (34P) CONNECTOR

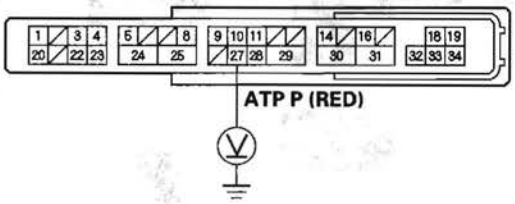

Wire side of female terminals

Is there about 5 V when the shift lever is in any position other than the P position, and no voltage when the shift lever is in the P position?

YES—Substitute a known-good MICU and recheck. ■

NO—Repair open or short in the wire between the MICU and the transmission range switch. ■

Shift Lock Solenoid Test

1. Connect the HDS to the DLC (A).

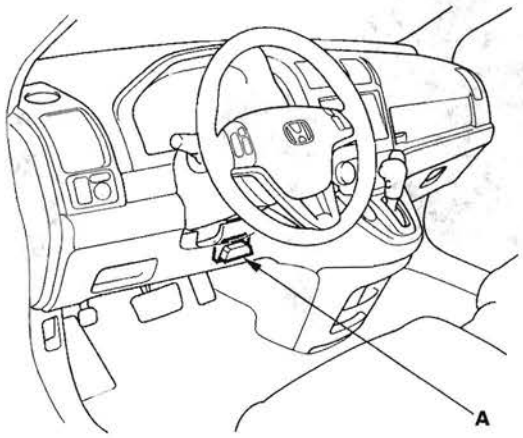

2. Select Shift Lock Solenoid Test in the Miscellaneous Test Menu of the HDS, and check that the shift lock solenoid operates.

   NOTE: If the HDS does not communicate with the PCM, troubleshoot the DLC circuit (see page 11-197).

3. Check that the shift lever can be moved out of the P position when Shift Lock Solenoid: ON. Move the shift lever back in the P position, and make sure it locks with Shift Lock Solenoid: OFF.

4. Check that the shift lock releases when the shift lock release is pushed, and check that it locks when the shift lock release is released.

5. If the shift lock solenoid does not work properly, perform shift lock system troubleshooting (see page 14-309).

Shift Lock Solenoid Replacement

1. Remove the shift lever (see page 14-272).
2. Remove the shift lock solenoid connector.
3. Release the lock tabs retaining the shift lock solenoid using thin blade screwdrivers.

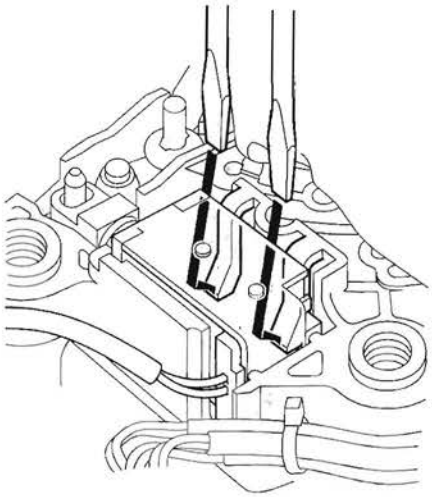

4. Insert a 6 mm pin (A) into the guide hole (B), and push the shift lock solenoid (C) out.

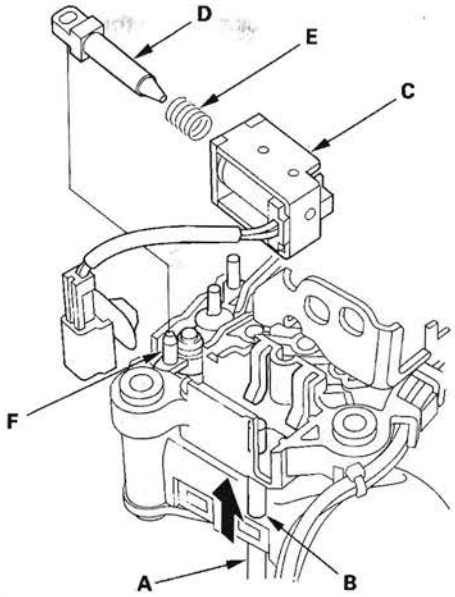

5. Replace the shift lock solenoid, solenoid plunger (D), and plunger spring (E) assembly.
6. Apply silicone grease to the tip (F) of the shift lock stop and solenoid plunger.
7. Install the shift lock solenoid by aligning the joint of the shift lock solenoid plunger with the tip of the shift lock stop, then push the shift lock solenoid into the shift lever securely.
8. Install the shift lock solenoid connector.
9. Install the shift lever (see page 14-274).

Shift Lock Stop, Shift Lock Stop Cushion Replacement

1. Remove the shift lock solenoid (see page 14-317).
2. Remove the shift lock stop (A) and stop cushion (B), and replace the shift lock stop or stop cushion.

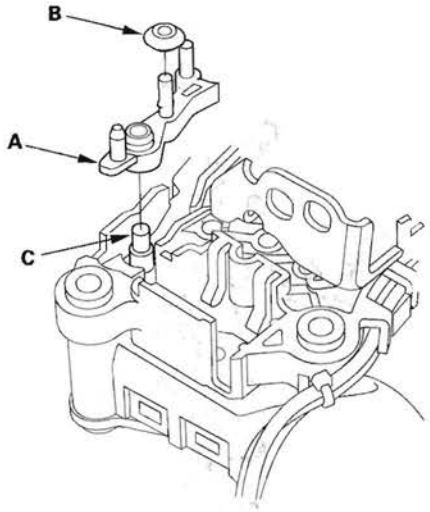

3. Install the shift lock stop cushion on the shift lock stop.
4. Apply silicone grease to the pin (C) on the shift lever bracket base, and install the shift lock stop over the pin.
5. Install the shift lock solenoid (see page 14-317).

Shift Lock Release, Release Spring, Release Shaft Replacement

1. Remove the shift lever (see page 14-272).
2. Remove the A/T gear position indicator panel from the shift lever.
3. Release the lock (A) of the shift lock release, and remove the shift lock release and release spring (B).

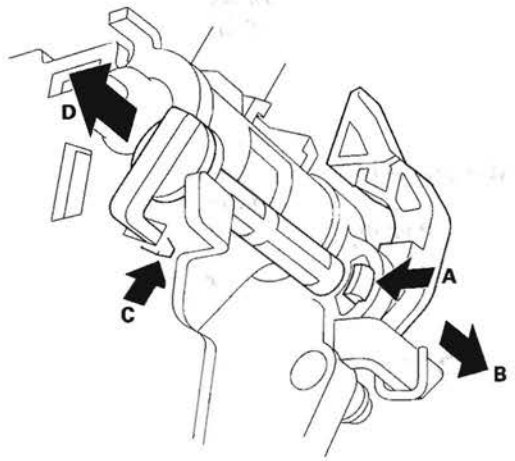

4. Release the lock (C) of the shift lock release shaft, and remove the shaft (D).
5. Replace the shift lock release, release spring, or release shaft.
6. Install the shift lock release spring (A) in the shift lock release (B).

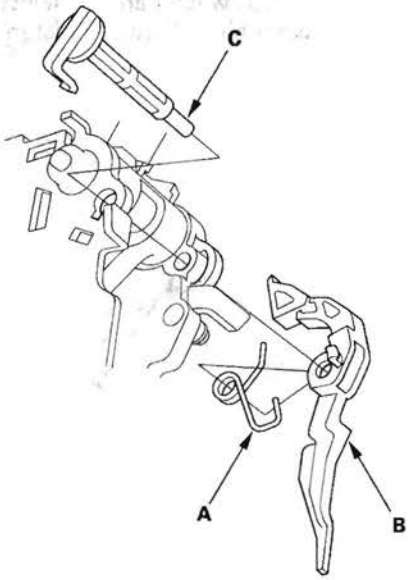

7. Install the shift lock release shaft (C) in the shift lever, and install the shift lock release and release spring on the release shaft end.
8. Make sure that the release spring end (A) is installed in the shift lock release (B), and the hooked end (C) is on the catch (D).

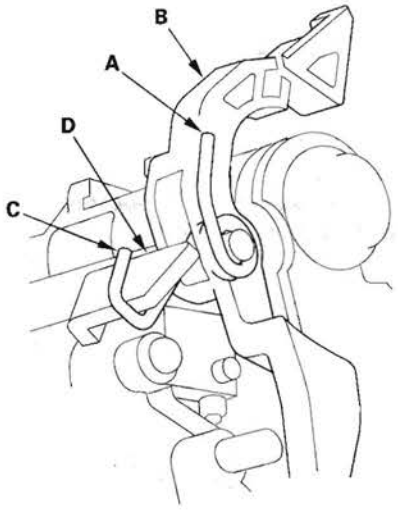

9. Install the A/T gear position indicator panel on the shift lever.
10. Install the shift lever (see page 14-274).

Park Pin Switch Test

1. Remove the center lower covers (see page 20-95).
2. Disconnect the D3 switch/park pin switch/A/T gear position indicator panel light connector.

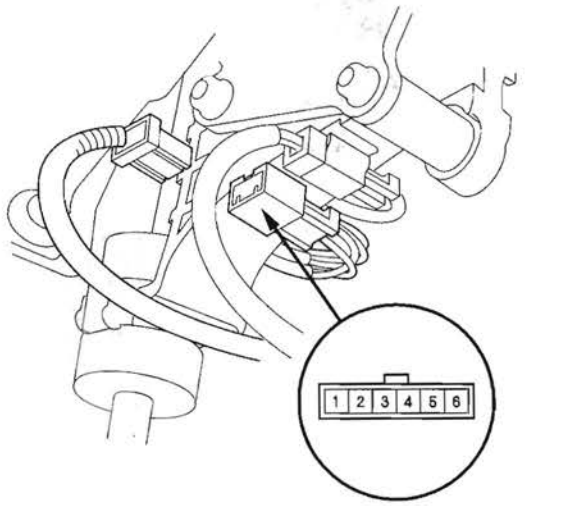

Terminal side of male terminals

3. Shift the shift lever into the P position, and check for continuity between D3 switch/park pin switch/ A/T gear position indicator panel light connector terminals No. 1 and No. 2.
   There should be no continuity.
4. Shift out of the P position, and check for continuity between connector terminals No. 1 and No. 2.
   There should be continuity.
5. If the park pin switch tests OK, connect the connector and install the center lower covers (see page 20-95).
   If the park pin switch fails the test, replace the park pin switch (see page 14-320).

Park Pin Switch Replacement

NOTE:
- The park pin switch is not available from the D3 switch connector harness and A/T gear position indicator panel light harness; replace the park pin switch, D3 switch connector harness, A/T gear position indicator panel light harness, and the connector as a set.
- Refer to the Shift Lever Disassembly and Reassembly (see page 14-275) as needed during the following procedures.

1. Remove the shift lever (see page 14-272).
2. Wrap the end of a flat-tip screwdriver (A) with tape, pry the shift lever knob cover locks (B), and remove the shift lever knob cover (C).

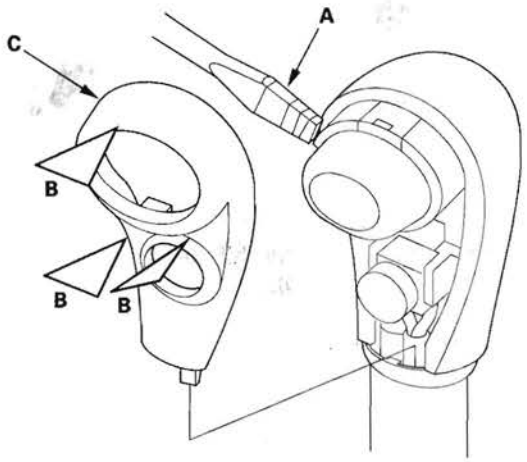

3. Remove the screws (A), shift lever button (B), and spring (C).

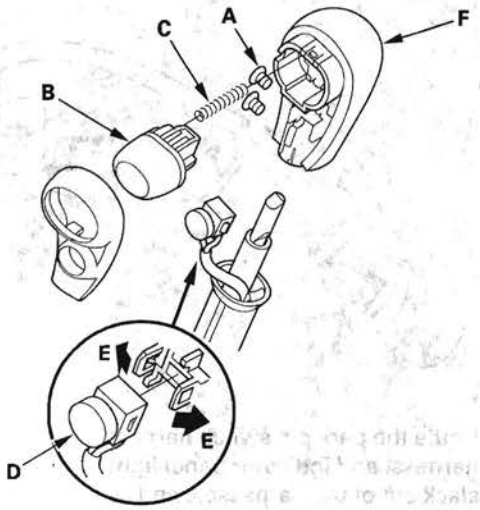

4. Remove the D3 switch (D) by expanding its locks (E) from the shift lever knob, and remove the shift lever knob (F).

5. Remove the shift lock solenoid connector and D3 switch/park pin switch/A/T gear position indicator panel light connector from the shift lever.

6. Remove the harness bands, and disconnect the D3 switch 2P connector (A).

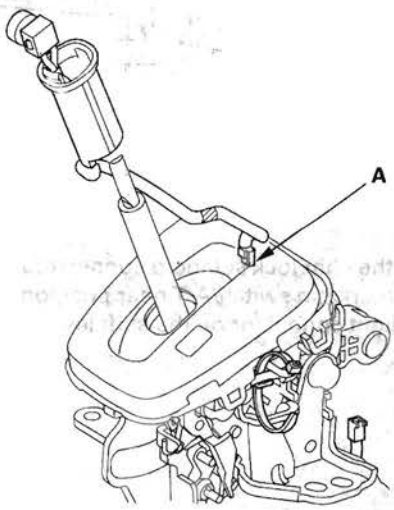

7. Remove the D3 switch harness and shift lever ring.

8. Remove the A/T gear position indicator panel light socket from the indicator panel, and remove the indicator panel.

9. Release the lock (A) of the shift lock release, and remove the shift lock release and release spring (B).

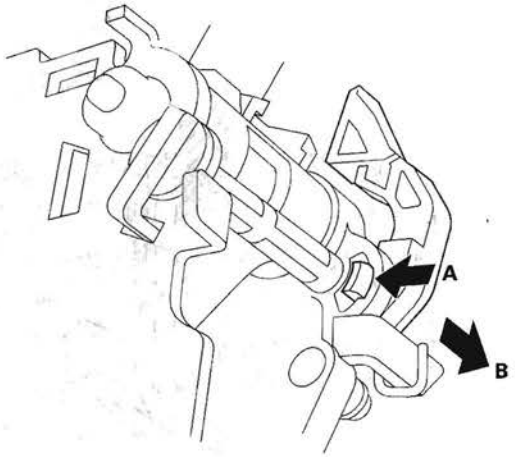

10. Remove the shift lever mounting bracket, and remove the park pin switch.

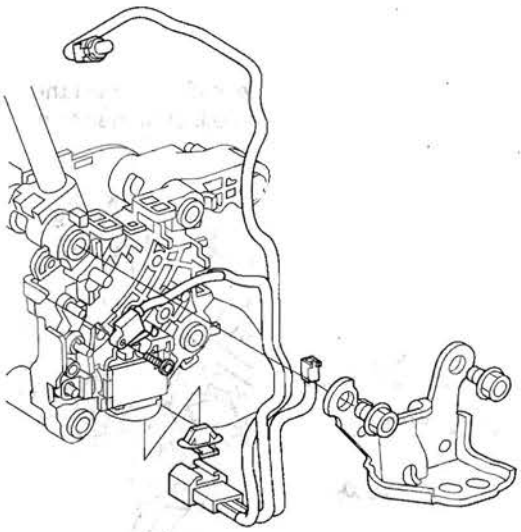

11. Remove the A/T gear position indicator panel light harness, park pin switch, D3 switch connector harness, and connector assembly, and replace it.

(cont'd)

Park Pin Switch Replacement (cont'd)

12. Apply non-hardening thread lock sealant to the screw threads. Install the new park pin switch (A), and secure the switch with the screw.

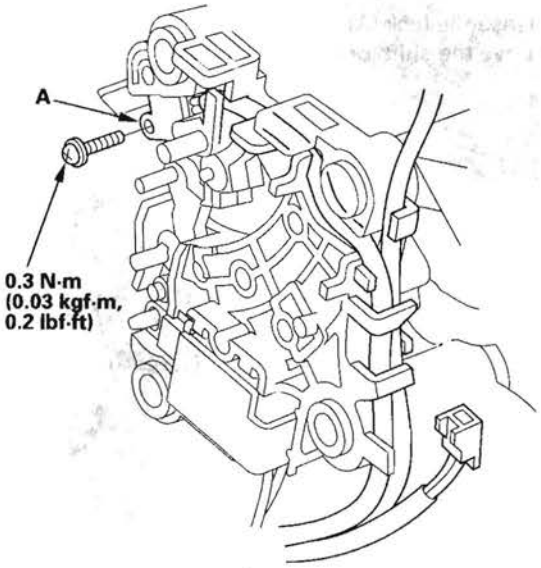

13. Install the shift lever mounting bracket.

14. Install the A/T gear position indicator panel, shift lever ring, and D3 switch harness.

15. Route the D3 switch harness (A), connect the D3 switch 2P connector (B), and install the connector in the holder.

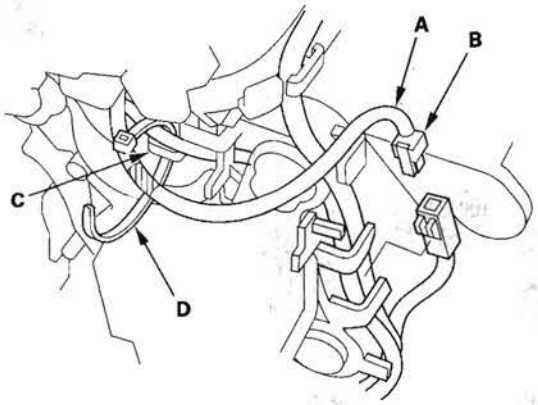

16. Tie the harnesses of the D3 switch and park pin switch at the guide (C) with the band (D).

17. Install the A/T gear position indicator panel light socket in the indicator panel.

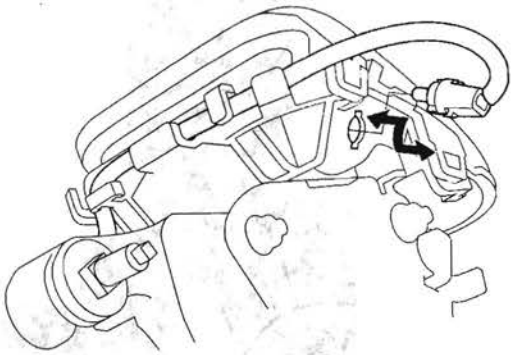

18. Route the park pin switch harness, D3 switch harness, and indicator panel light harness. Take a slack out of the harnesses, and secure the harnesses (A) with the band (B) at the guide (C).

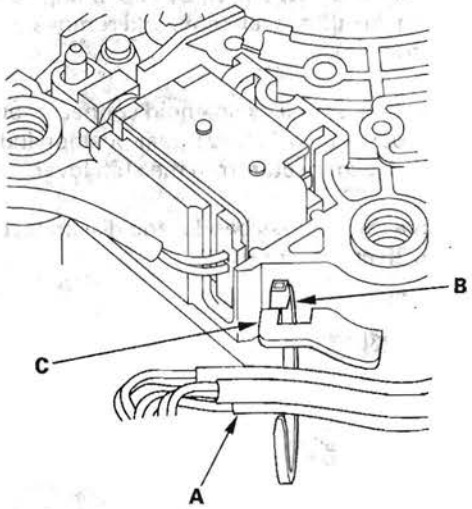

19. Install the shift lock solenoid connector and D3 switch/park pin switch/A/T gear position indicator panel light connector on the shift lever.

20. Install the shift lock release spring (A) in the shift lock release (B).

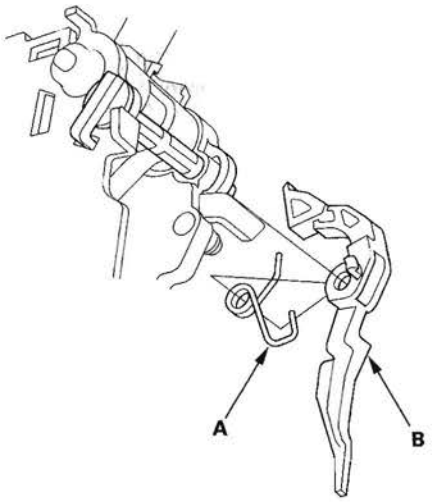

21. Install the shift lock release and release spring on the release shaft end.

22. Make sure that the release spring end (A) is installed in the shift lock release (B), and the hooked end (C) is on the catch (D).

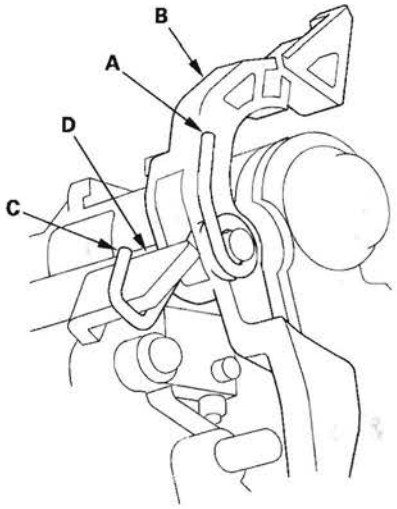

23. Apply silicone grease to the top of the shift lever rod (A), to the shift lever button spring (B), and to the area of the shift lever button (C) connected with the shift lever rod.

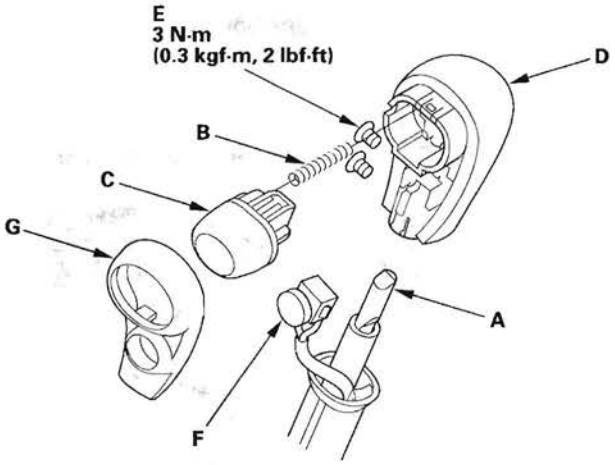

24. Install the shift lever button spring and button in the shift lever knob (D), and install the shift lever knob over the shift lever.

25. Apply non-hardening thread lock sealant to the screw threads, and secure the shift lever knob with the screws (E).

26. Install the D3 switch (F) and shift lever knob cover (G) on the shift lever knob.

27. Install the shift lever (see page 14-274).

Transmission End Cover

End Cover Removal

Special Tools Required
Mainshaft holder 07GAB-PF50101 or 07GAB-PF50100

NOTE: The illustration shows the 4WD transmission; the 2WD is similar.

1. Remove the cooler inlet line bolt (D), sealing washers, and line bracket bolts (E), and remove the ATF cooler inlet line (F).

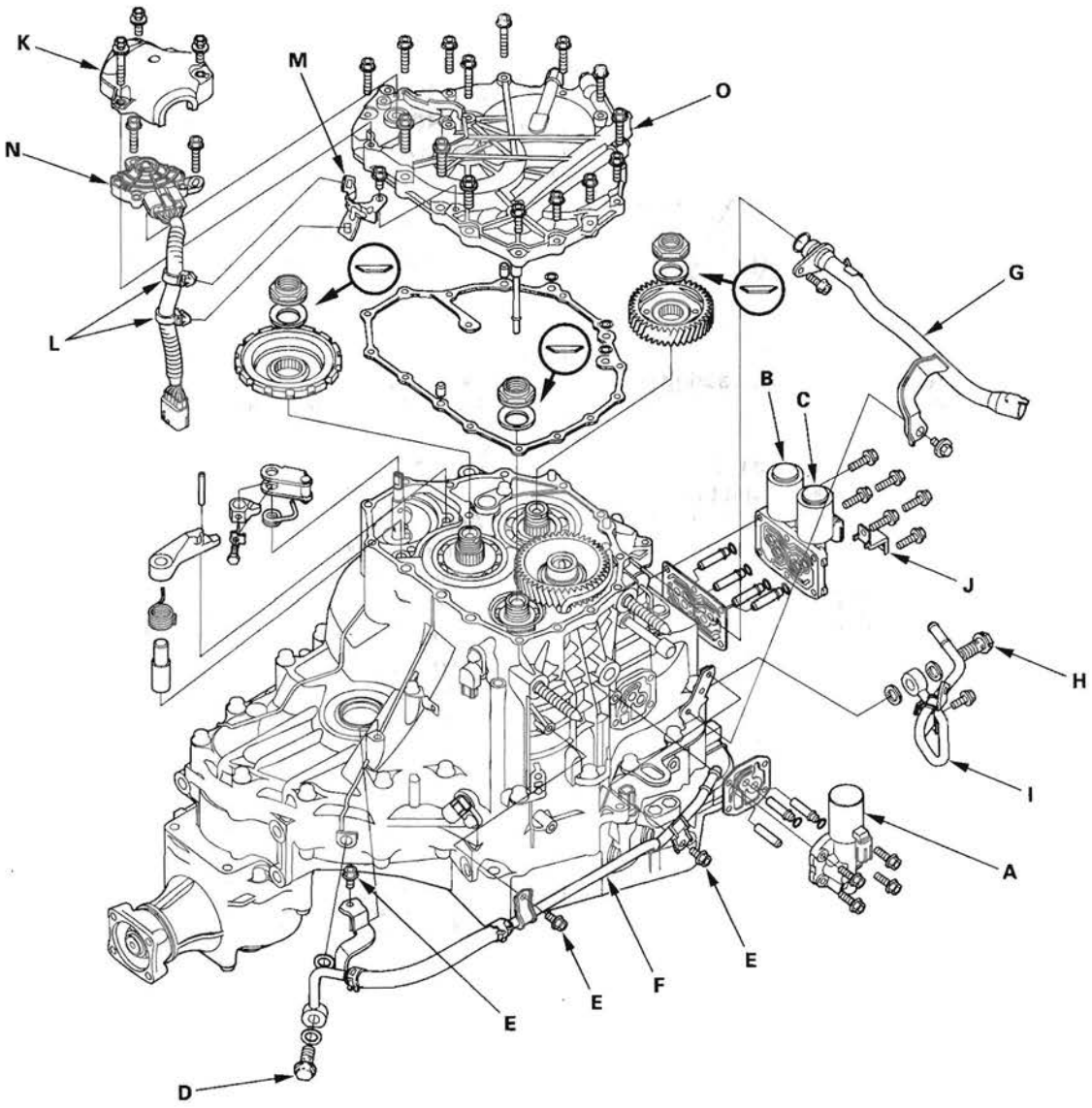

2. Remove the ATF dipstick guide tube (G).

3. Remove the cooler outlet line bolt (H) and sealing washers, and remove the ATF cooler outlet line (I).

4. Remove A/T clutch pressure control solenoid valve A, ATF joint pipes, O-rings, ATF pipe, and gasket.

5. Remove A/T clutch pressure control solenoid valve B and C, harness clamp bracket (J), ATF joint pipes, O-rings, and gasket.

6. Remove the transmission range switch cover (K).

7. Remove the transmission range switch harness clamps (L) from the clamp bracket (M), and remove the transmission range switch (N).

8. Remove the harness clamp bracket from the end cover (O).

9. Remove the end cover, dowel pins, O-rings, and end cover gasket.

10. Slip the mainshaft holder onto the mainshaft.

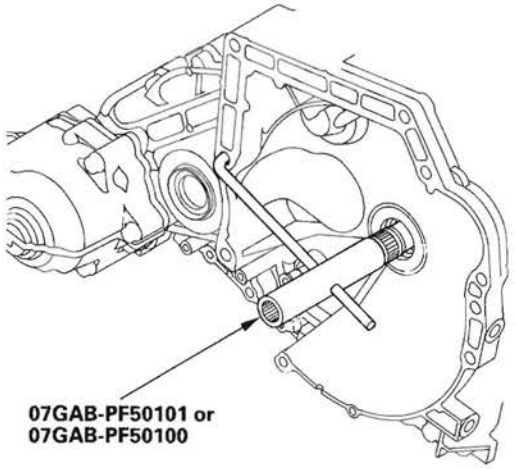

11. Engage the park pawl with the park gear.

12. Cut the lock tab (A) of the each shaft locknut (B) using a chisel (C). Then remove the locknuts and conical spring washers from each shaft.

    NOTE:
    - Countershaft and secondary shaft locknuts have left-hand threads.
    - Keep all of the chiseled particles out of the transmission.
    - Clean the old mainshaft and countershaft locknuts; they are used to install the press fit idler gear on the mainshaft, and park gear on the countershaft.

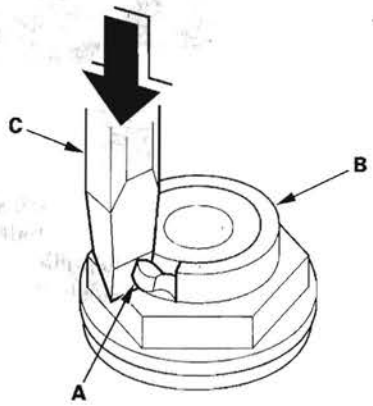

13. Remove the special tool from the mainshaft.

(cont'd)

End Cover Removal (cont'd)

14. Set a two-jaw (or three-jaw) puller (A) on the countershaft (B) by putting a spacer (C) between the puller and countershaft, then remove the park gear (D).

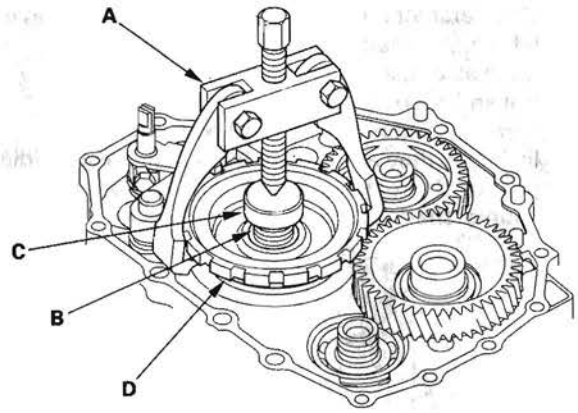

15. Install a 6 x 1.0 mm bolts (A) on the mainshaft idler gear (B). Set a puller (C) on the mainshaft (D) with putting a spacer (E) between the puller and mainshaft, then remove the mainshaft idler gear.

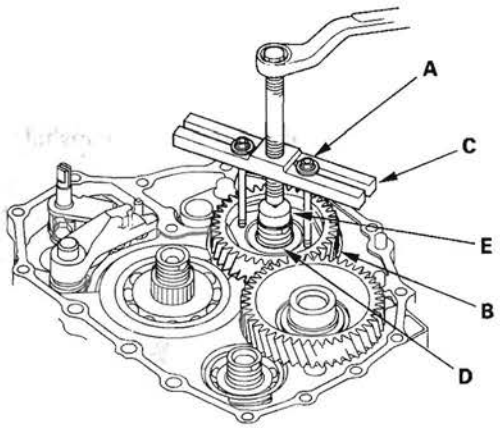

16. Remove the park pawl, park pawl spring, park pawl shaft, and stop shaft.

17. Remove the park lever from the control shaft.

Park Lever Stop Inspection and Adjustment

1. Set the park lever in the P position.
2. Measure the distance (A) between the park pawl shaft (B) and the park lever roller pin (C).

   Standard: 57.7—58.7 mm (2.27—2.31 in.)

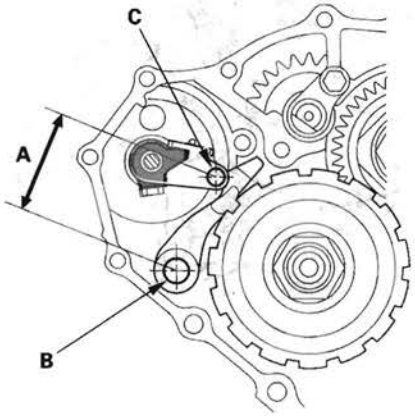

3. If the measurement is out of standard, select and install the appropriate park lever stop (A) from the table.

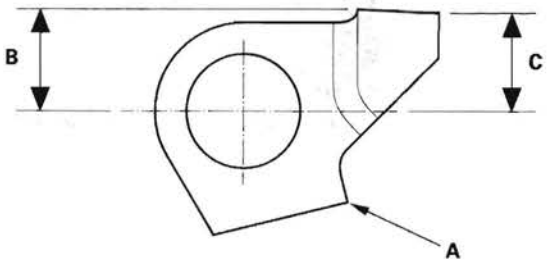

PARK LEVER STOP

Mark	Part Number	B	C
1	24537-PA9-003	11.00 mm (0.433 in.)	11.00 mm (0.433 in.)
2	24538-PA9-003	10.80 mm (0.425 in.)	10.65 mm (0.419 in.)
3	24539-PA9-003	10.60 mm (0.417 in.)	10.30 mm (0.406 in.)

4. After replacing the park lever stop, make sure the distance is within tolerance.

Idler Gear Shaft Bearing Replacement

Special Tools Required
- Adjustable bearing puller, 25—40 mm 07736-A01000B or 07736-A01000A
- Driver 07749-0010000
- Attachment, 52 x 55 mm 07746-0010400

1. Remove the idler gear shaft bearing (A) from the end cover (B) using the adjustable bearing puller and a commercially available 3/8 "-16 slide hammer (C).

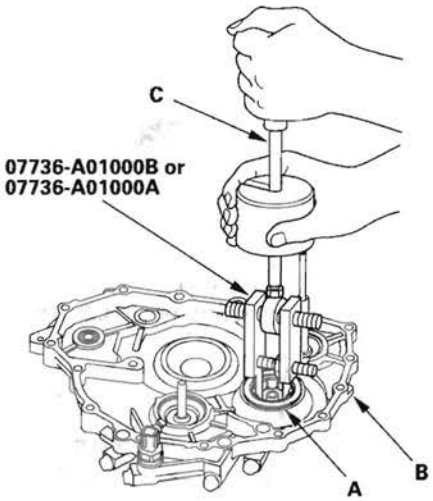

2. Install the new bearing in the end cover using the driver and the attachment (52 x 55 mm).

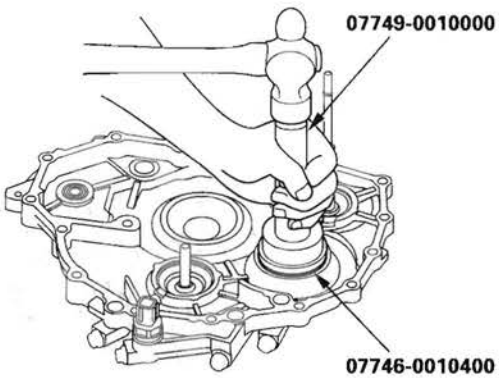

Selector Control Shaft Oil Seal Replacement

Special Tools Required
- Driver 07749-0010000
- Attachment, 22 x 24 mm 07746-0010800

1. Remove the oil seal (A) from the end cover (B).

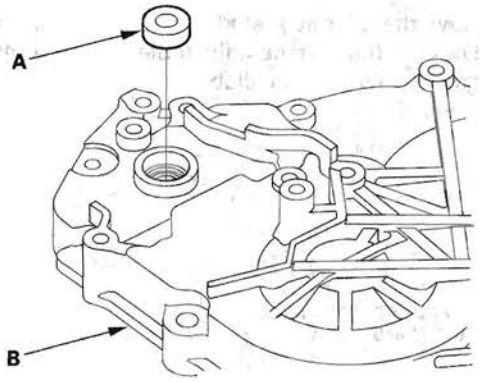

2. Install the new oil seal flush to the end cover using the driver and the attachment (22 x 24 mm).

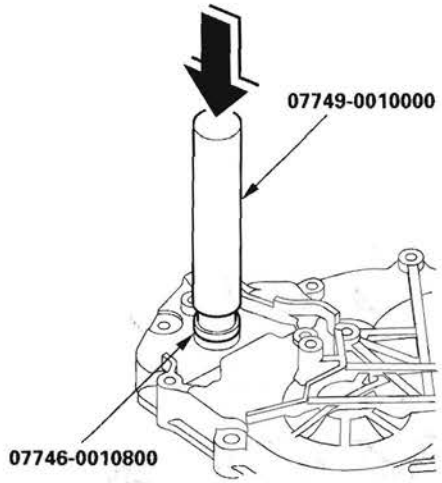

Selector Control Shaft Bearing Replacement

Special Tools Required
- Driver 07749-0010000
- Attachment, 22 x 24 mm 07746-0010800

1. Remove the oil seal from the end cover, then remove the bearing.

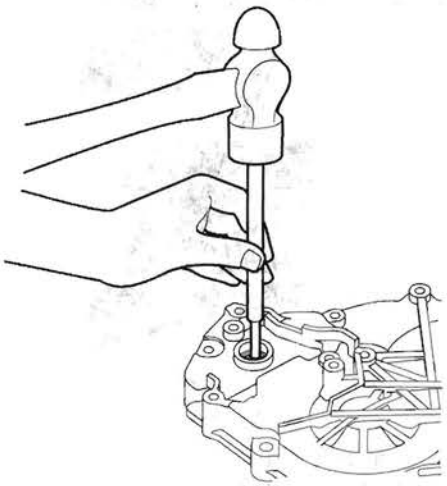

2. Install the new bearing flush to the end cover using the driver and the attachment (22 x 24 mm).

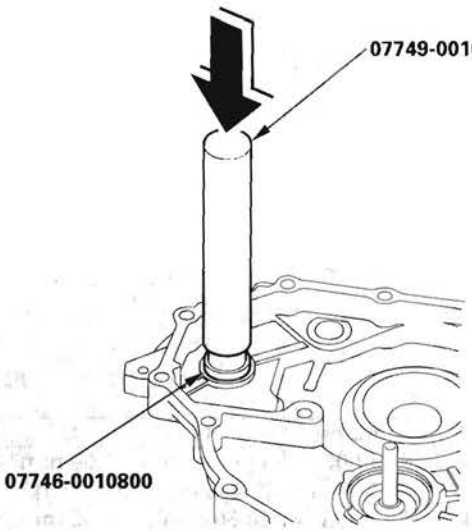

3. Install the new oil seal.

ATF Feed Pipe Replacement

1. Remove the snap rings (A), ATF feed pipes (B), and feed pipe flanges (C) from the end cover (D).

   NOTE: Replace the end cover, if the 1st clutch ATF feed pipe (E) replacement is required.

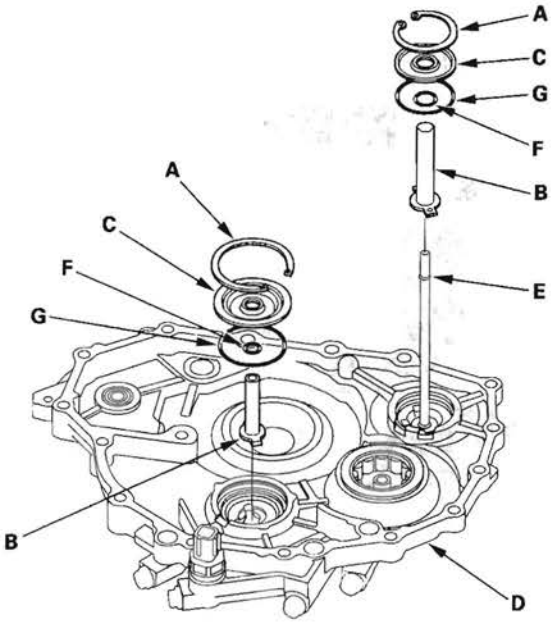

2. Install the new O-rings (F) over the ATF feed pipes.
3. Install the ATF feed pipes in the end cover by aligning the feed pipe tabs with the indentations in the end cover.
4. Install the new O-rings (G) in the end cover, then install the feed pipe flanges over the ATF feed pipes.
5. Secure the ATF feed pipes and feed pipe flanges with the snap rings.

Housing and Shaft Assembly Removal

NOTE: The illustration shows the 4WD transmission; the 2WD does not have the transfer mechanism.

1. Remove the ATF feed pipe (A) from the idler gear shaft, and the ATF lubrication pipe (B) from the transmission housing.

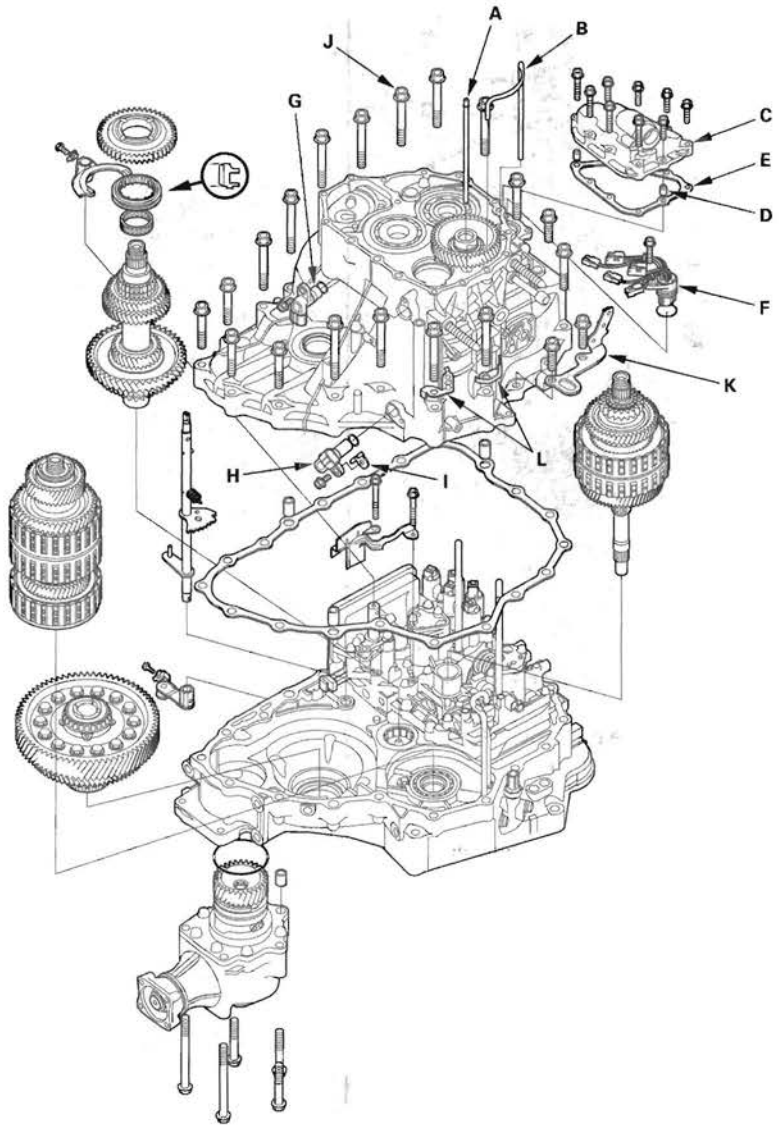

2. Remove the shift solenoid valve cover (C), dowel pins (D), and gasket (E).
3. Disconnect the connectors from shift solenoid valves, and remove the solenoid harness connector (F).
4. Remove the input shaft (mainshaft) speed sensor (G), and output shaft (countershaft) speed sensor (H) and sensor washer (I).
5. Remove the transmission housing mounting bolts (J) (20 bolts), transmission hanger (K), and harness clamp brackets (L).

6. Align the spring pin (A) on the selector control shaft (B) with the transmission housing groove (C) by turning the control shaft with the control lever.

   NOTE: Do not squeeze the end of the control shaft tips together when turning the shaft.

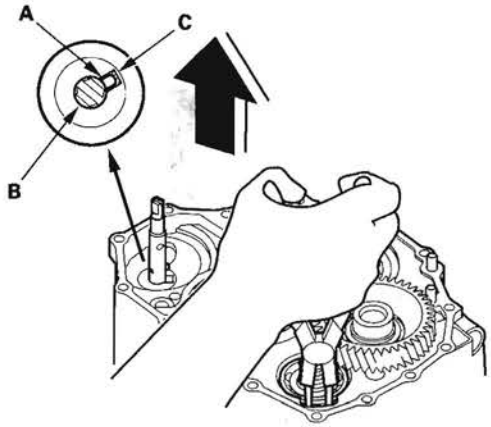

7. While expanding the snap ring of the secondary shaft bearing using the snap ring pliers, lift the transmission housing. Release the snap ring pliers and remove the transmission housing.

8. Remove the countershaft reverse gear and needle bearing.

9. Remove the lock bolt securing the shift fork, then remove the shift fork with the reverse selector together.

10. Remove the selector control lever from the selector control shaft.

11. Unhook the detent spring (A) from the detent arm (B).

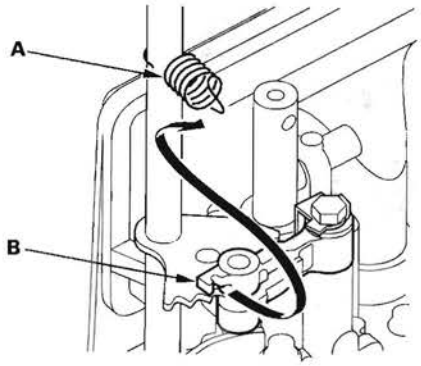

12. Remove the selector control shaft (A) from the torque converter housing.

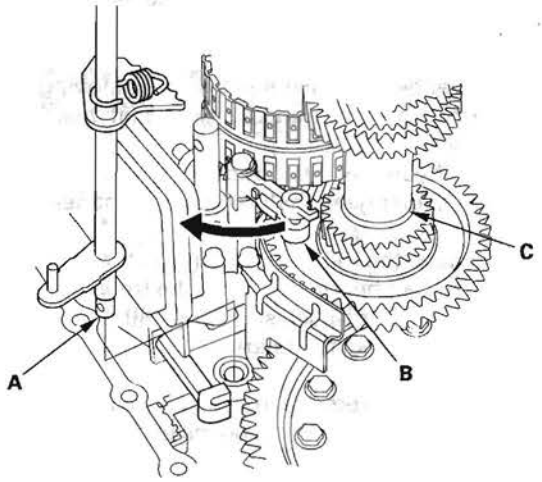

13. Turn the detent arm (B) away from the countershaft (C).

14. Remove the mainshaft subassembly (A), countershaft subassembly (B), and secondary shaft subassembly (C) together. Do not bump the countershaft on the baffle plate (D).

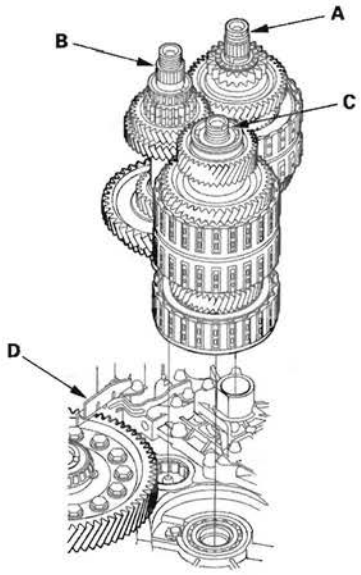

15. Remove the baffle plate.

16. Remove the differential assembly.

17. 4WD model: Remove the transfer assembly.

Bearing Removal

Special Tools Required
- Attachment, 78 x 90 mm 07GAD-SD40101
- Attachment, 42 x 47 mm 07746-0010300
- Driver 07749-0010000

1. Remove the idler gear shaft when removing the mainshaft bearing and idler gear shaft bearing.

   NOTE: If you are only removing the countershaft bearing, idler gear shaft removal is not needed.

2. To remove the mainshaft bearing (A) and countershaft bearing (B) from the transmission housing, expand each snap ring with the snap ring pliers, then push the bearing out.

   NOTE: Do not remove the snap ring unless it's necessary to clean the grooves in the housing.

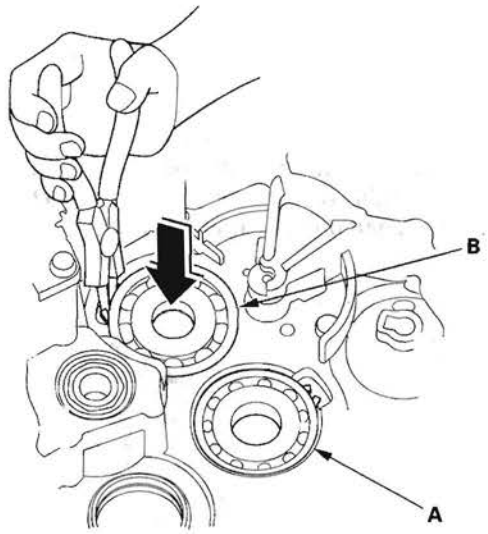

3. Expand the snap ring of the idler gear shaft bearing with the snap ring pliers, then push the bearing out.

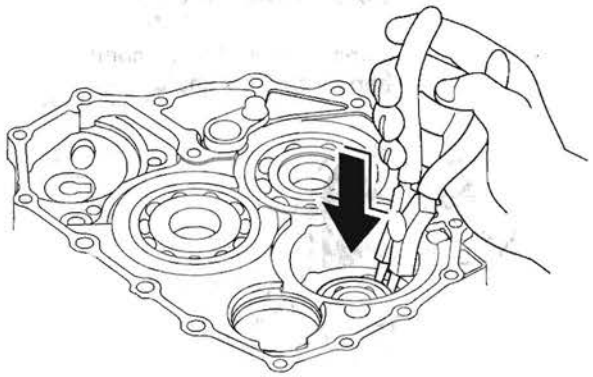

Bearing Installation

Special Tools Required
- Attachment, 78 x 90 mm 07GAD-SD40101
- Attachment, 42 x 47 mm 07746-0010300
- Driver 07749-0010000

1. Install the bearings in the direction shown.
2. Expand each snap ring with the snap ring pliers, and install the mainshaft bearing (A) and countershaft bearing (B) part-way into the housing.

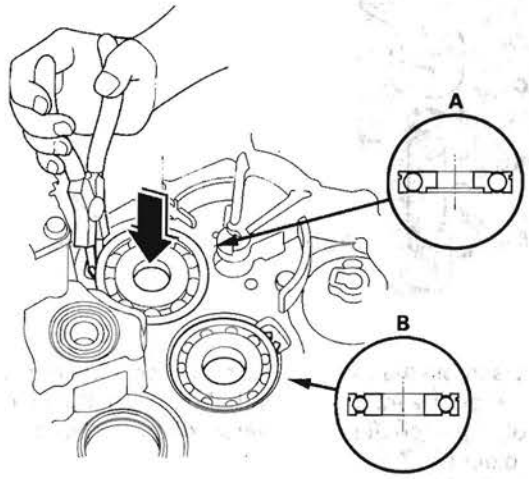

3. Release the pliers, then push the bearing down into the housing until the snap ring snaps in place around it.
4. Expand the snap ring of the idler gear shaft (A) with the snap ring pliers, and install the bearing part-way into the housing.

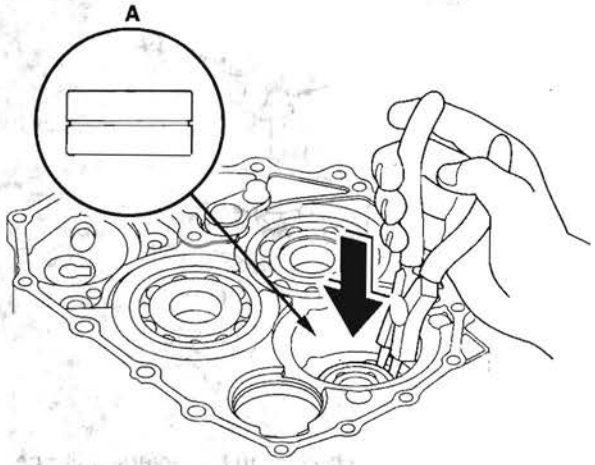

5. Release the pliers, then push the bearing down into the housing until the snap ring snaps in place around it.
6. After installing the bearings verify that the snap rings (A) are seated in the bearing and housing grooves, and that the ring end gaps (B) are correct.

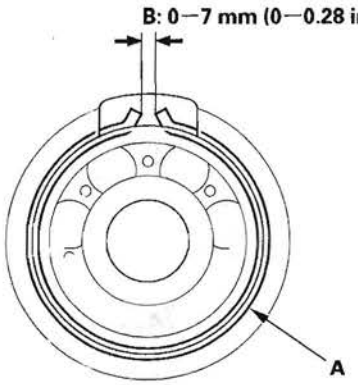

7. Install the idler shaft.

Reverse Idler Gear Removal and Installation

Removal

1. Remove the bolt (A) securing the reverse idler gear shaft holder.

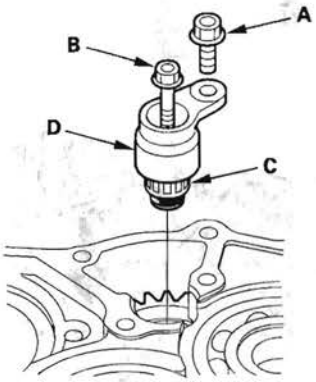

2. Install a 5 x 0.8 mm bolt (B) in the reverse idler gear shaft, and pull it to remove the reverse idler gear shaft (C) and gear shaft holder (D) together.

3. Remove the reverse idler gear.

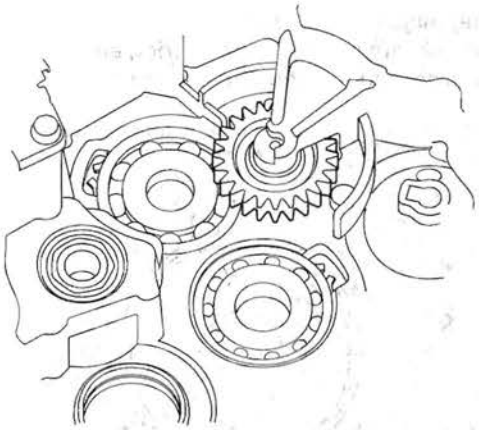

Installation

1. Install the reverse idler gear in the transmission housing.

2. Lightly coat the reverse idler gear shaft (A), needle bearing (B), and new O-rings (C) with lithium grease.

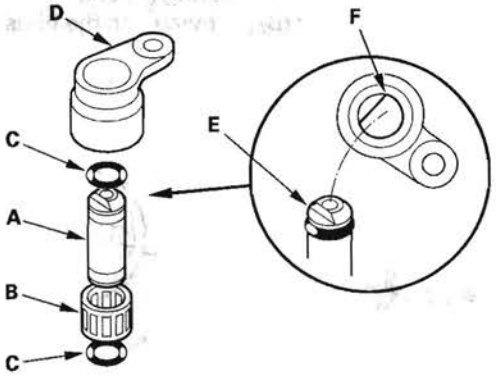

3. Assemble the new O-rings and needle bearing on the reverse idler gear shaft, then install the reverse idler gear shaft in the reverse idler gear shaft holder (D). Align the D-shaped cut out (E) of the shaft with the D-shaped area (F) of the holder.

4. Install the reverse idler gear shaft/holder assembly on the transmission housing.

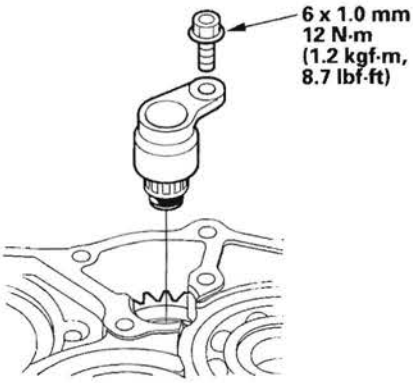

Valve Body and ATF Strainer Removal

NOTE: The illustration shows the 4WD transmission; the 2WD is similar.

1. Remove the ATF feed pipes (A) and ATF joint pipes (B).

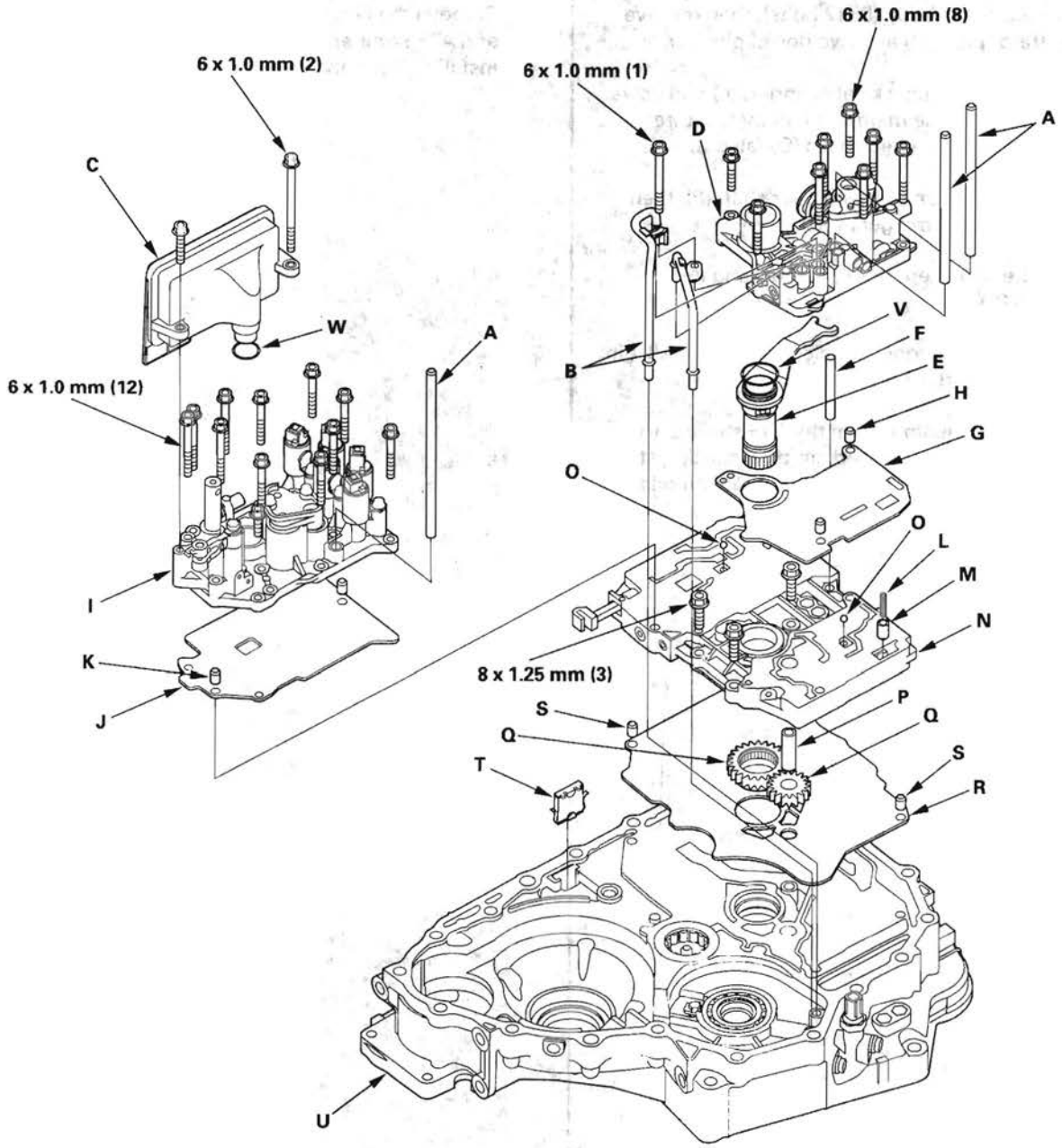

2. Remove the ATF strainer (C) (two bolts).
3. Remove the regulator valve body (D) (eight bolts).

(cont'd)

Valve Body and ATF Strainer Removal (cont'd)

4. Remove the stator shaft (E) and stator shaft stop (F), then remove the regulator separator plate (G) and two dowel pins (H).

5. Remove the servo body (I) (12 bolts), then remove the separator plate (J) and two dowel pins (K).

6. Remove the cooler check valve spring (L) and valve (M), then remove the main valve body (N) (three bolts). Do not let the check balls (O) fall out.

7. Remove the ATF pump driven gear shaft (P), then remove the ATF pump gears (Q).

8. Remove the main separator plate (R) and two dowel pins (S).

9. Remove the ATF magnet (T), clean and reinstall it in the torque converter housing (U).

10. Clean the inlet opening (A) of the ATF strainer (B) thoroughly with compressed air, then check that it is in good condition and that the inlet opening is not clogged.

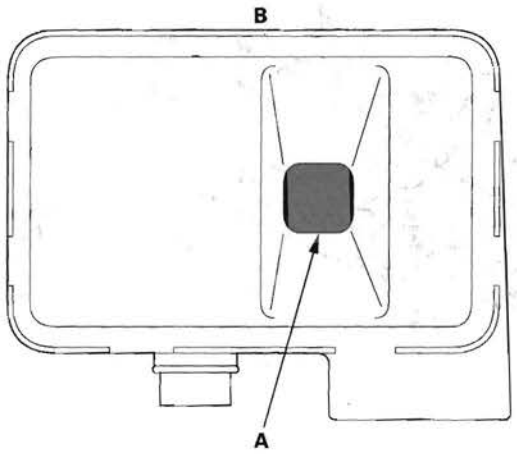

11. Test the ATF strainer by pouring clean ATF through the inlet opening, and replace it if it is clogged or damaged.

12. Remove the O-rings (V) (W) from the stator shaft and ATF strainer. Install the new ones when installing the valve bodies.

Valve Body Repair

NOTE: This repair is only necessary if one or more of the valves in a valve body do not slide smoothly in their bores. Use this procedure to free the valves.

1. Soak a sheet of #600 abrasive paper in ATF for about 30 minutes.

2. Carefully tap the valve body so the sticking valve drops out of its bore. It may be necessary to use a small screwdriver to pry the valve free. Be careful not to scratch the bore with the screwdriver.

3. Inspect the valve for any scuff marks. Use the ATF-soaked #600 paper to polish off any burrs that are on the valve, then wash the valve in solvent and dry it with compressed air.

4. Roll up half a sheet of ATF-soaked #600 paper and insert it in the valve bore of the sticking valve. Twist the paper slightly, so that it unrolls and fits the bore tightly, then polish the bore by twisting the paper as you push it in and out.

   NOTE: The valve body is aluminum and doesn't require much polishing to remove any burrs.

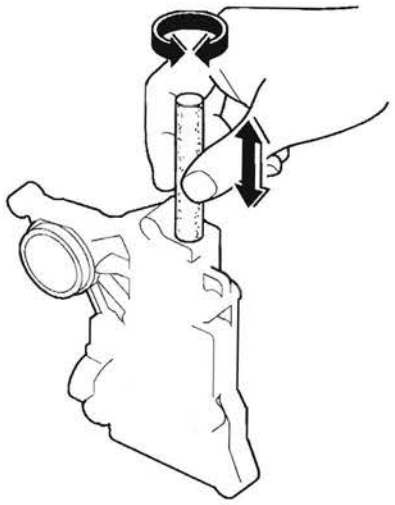

5. Remove the #600 paper. Thoroughly wash the entire valve body in solvent, then dry it with compressed air.

6. Coat the valve with ATF, then drop it into its bore. It should drop to the bottom of the bore under its own weight. If not, repeat step 4, then retest. If the valve still sticks, replace the valve body.

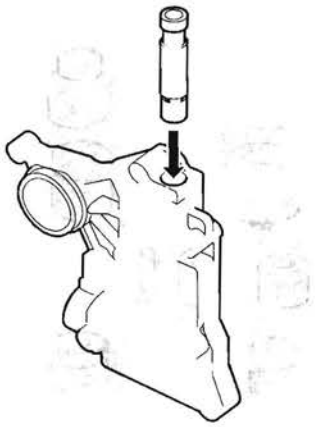

7. Remove the valve, and thoroughly clean it and the valve body with solvent. Dry all parts with compressed air, then reassemble using ATF as a lubricant.

Valve Body Valve Installation

1. Coat all parts with ATF before assembly.
2. Install the valves and springs in the sequence shown for the main valve body (see page 14-339), regulator valve body (see page 14-341), and servo body (see page 14-342). Refer to the following valve cap illustrations, and install each valve cap so the end shown facing up will be facing the outside of the valve body.

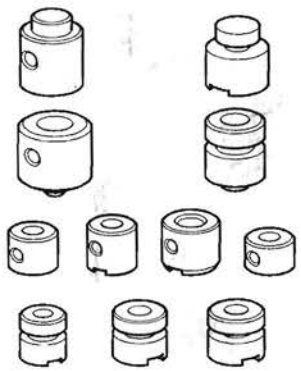

3. Install all the springs and seats. Insert the spring (A) in the valve, then install the valve in the valve body (B). Push the spring in with a screwdriver, then install the spring seat (C).

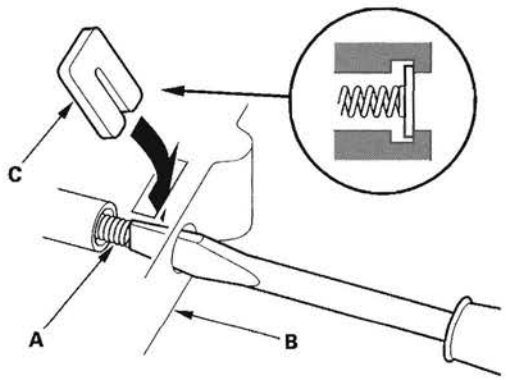

Main Valve Body Disassembly, Inspection, and Reassembly

1. Clean all parts thoroughly in solvent, and dry them with compressed air. Blow out all passages.
2. Do not use a magnet to remove the check balls, it may magnetize the balls.
3. Inspect the valve body for scoring and damage.
4. Check all valves for free movement. If any fail to slide freely, refer to valve body repair (see page 14-337).
5. Coat all parts with ATF during assembly.

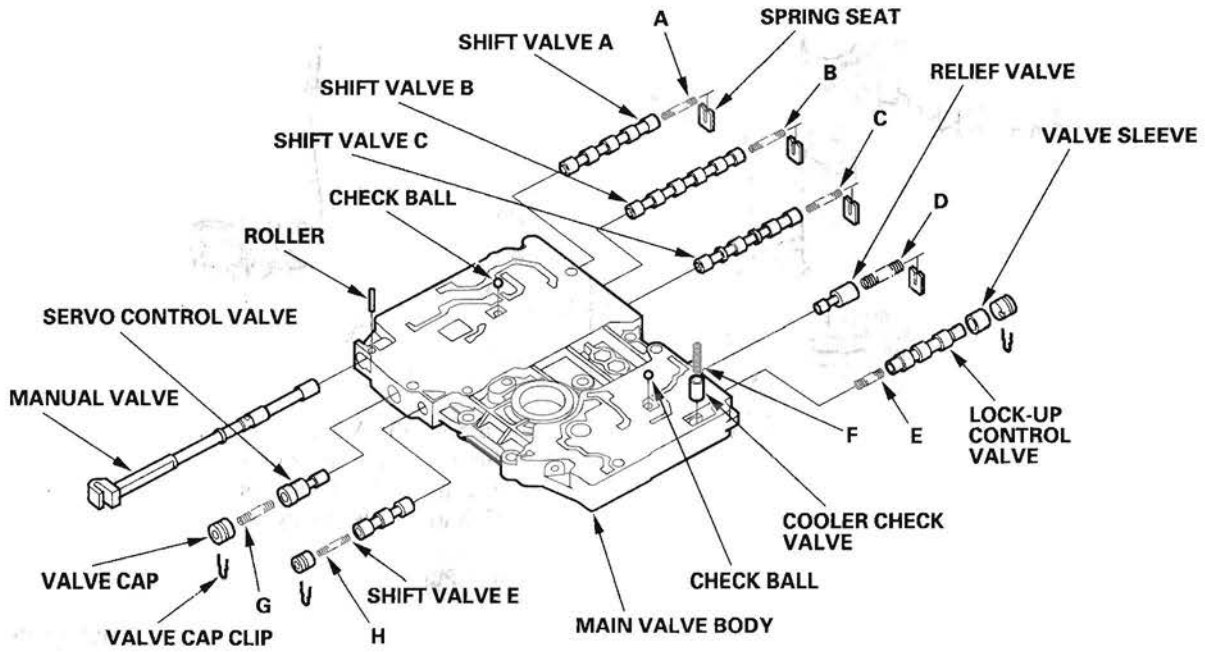

SPRING SPECIFICATIONS

Springs		Standard (New)-Unit: mm (in.)			
		Wire Diameter	O.D.	Free Length	No. of Coils
A	Shift valve A spring	0.8 (0.031)	5.6 (0.220)	28.1 (1.106)	15.9
B	Shift valve B spring	0.8 (0.031)	5.6 (0.220)	28.1 (1.106)	15.9
C	Shift valve C spring	0.8 (0.031)	5.6 (0.220)	28.1 (1.106)	15.9
D	Relief valve spring	1.0 (0.039)	9.6 (0.378)	34.1 (1.343)	10.2
E	Lock-up control valve spring	0.65 (0.026)	7.1 (0.280)	23.1 (0.909)	12.7
F	Cooler check valve spring	0.85 (0.033)	6.6 (0.260)	27.0 (1.063)	11.3
G	Servo control valve spring	0.7 (0.028)	6.6 (0.260)	35.7 (1.406)	17.2
H	Shift valve E spring	0.8 (0.031)	5.6 (0.220)	28.1 (1.106)	15.9

ATF Pump Inspection

1. Install the ATF pump drive gear (A), driven gear (B), and ATF pump driven gear shaft (C) in the main valve body (D). Lubricate all parts with ATF, and install the ATF pump driven gear with its grooved and chamfered side facing up.

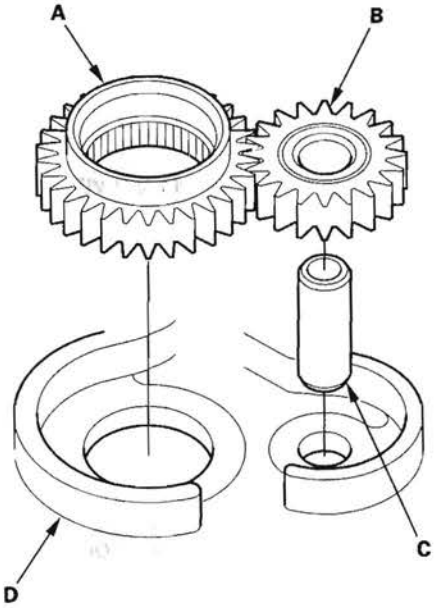

2. Measure the side clearance of the ATF pump drive gear (A) and driven gear (B).

ATF Pump Gears Side (Radial) Clearance:
Standard (New):
ATF Pump Drive Gear:
0.210—0.265 mm (0.0083—0.0104 in.)
ATF Pump Driven Gear:
0.070—0.125 mm (0.0028—0.0049 in.)

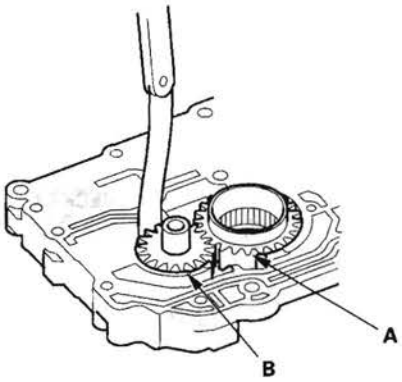

3. Remove the ATF pump driven gear shaft. Measure the thrust clearance between the ATF pump driven gear (A) and the valve body (B) with a straight edge (C) and a feeler gauge (D).

ATF Pump Drive/Driven Gear Thrust (Axial) Clearance:
Standard (New): 0.03—0.06 mm (0.001—0.002 in.)
Service Limit: 0.07 mm (0.003 in.)

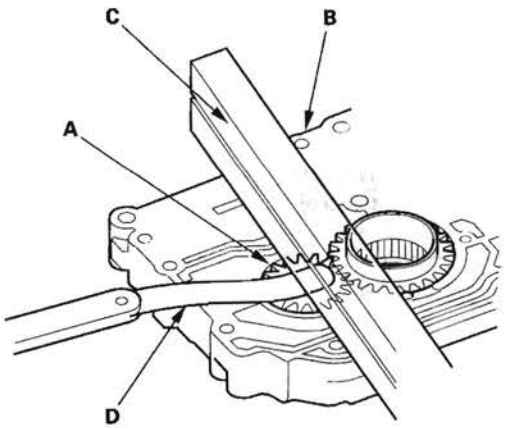

Regulator Valve Body Disassembly, Inspection, and Reassembly

1. Clean all parts thoroughly in solvent, and dry them with compressed air. Blow out all passages.
2. Inspect the valve body for scoring and damage, and check all valves for free movement. If any fail to slide freely, refer to valve body repair (see page 14-337).
3. Hold the regulator spring cap in place while removing the stop bolt. The regulator spring cap is spring loaded.
4. Coat all parts with ATF during assembly.
5. When reassembling the valve body, align the hole in the regulator spring cap with the hole in the valve body, then press the spring cap into the valve body, and tighten the stop bolt.

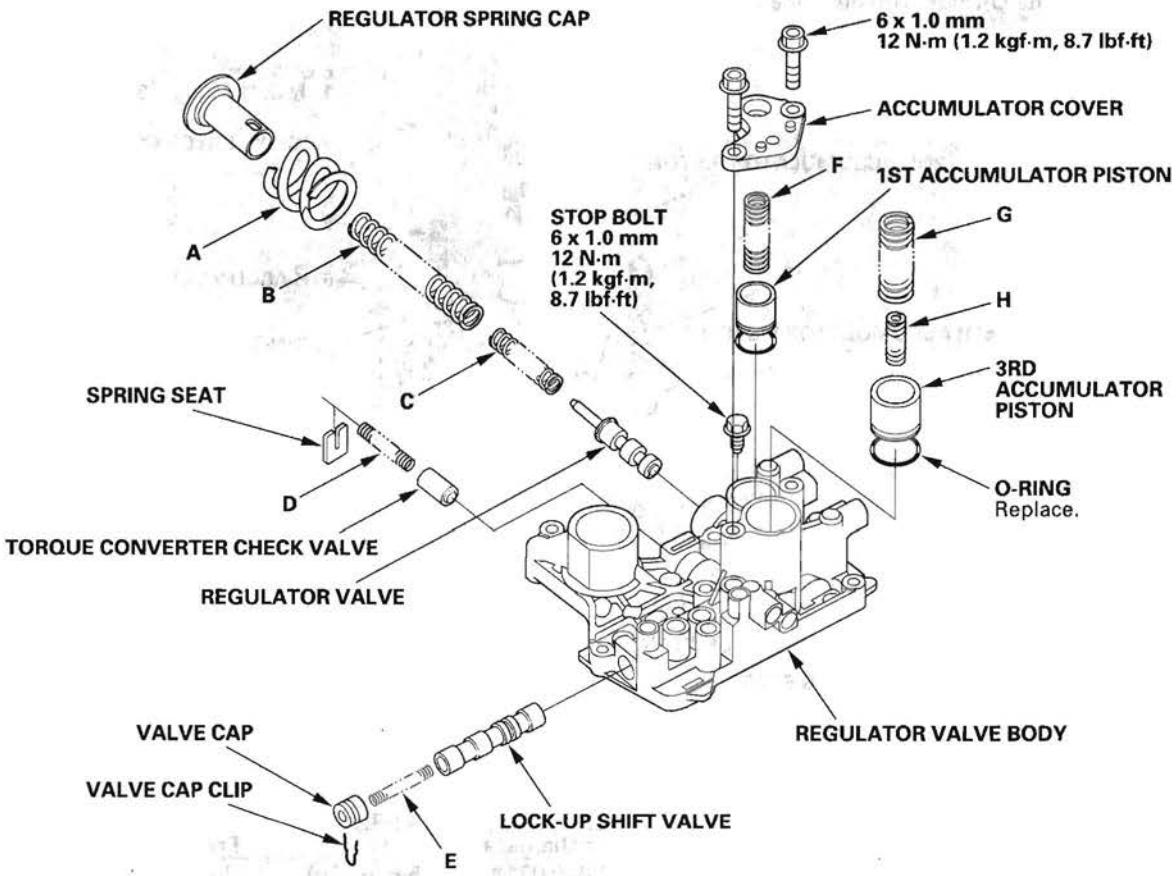

SPRING SPECIFICATIONS

Springs		Standard (New)-Unit: mm (in.)			
		Wire Diameter	O.D.	Free Length	No. of Coils
A	Stator reaction spring	4.5 (0.177)	35.4 (1.394)	30.3 (1.193)	1.92
B	Regulator valve spring A	1.85 (0.073)	14.7 (0.579)	83.0 (3.268)	16.9
C	Regulator valve spring B	1.6 (0.063)	9.2 (0.362)	44.0 (1.732)	12.5
D	Torque converter check valve spring	1.2 (0.047)	8.6 (0.339)	33.8 (1.331)	12.2
E	Lock-up shift valve spring	1.0 (0.039)	6.6 (0.260)	35.5 (1.398)	18.2
F	3rd accumulator spring	2.5 (0.098)	14.6 (0.575)	29.4 (1.157)	4.9
G	1st accumulator spring A	2.4 (0.094)	18.6 (0.732)	49.0 (1.929)	7.1
H	1st accumulator spring B	2.3 (0.091)	12.2 (0.480)	31.5 (1.240)	6.6

Servo Body Disassembly, Inspection, and Reassembly

1. Clean all parts thoroughly in solvent, and dry them with compressed air. Blow out all passages.
2. Inspect the valve body for scoring and damage.
3. Check the shift valve D for free movement. If any fail to slide freely, refer to valve body repair (see page 14-337).
4. When removing and installing the shift solenoid valves, refer to shift solenoid valves removal and installation (see page 14-343).
5. Coat all parts with ATF during assembly.
6. Replace the O-rings with new ones.

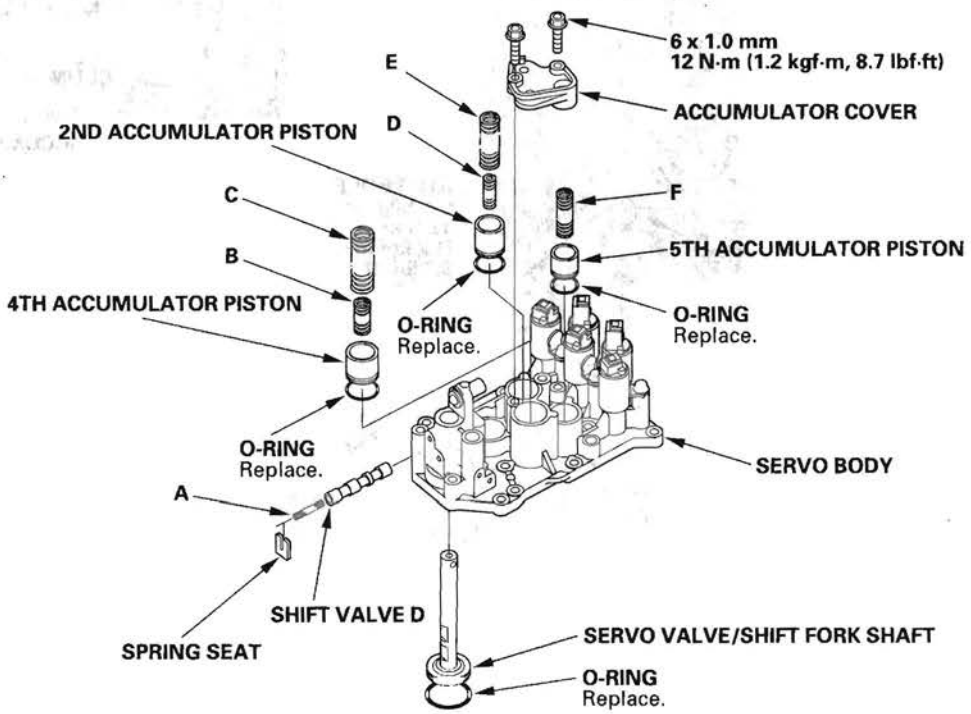

SPRING SPECIFICATIONS

Springs		Standard (New)-Unit: mm (in.)			
		Wire Diameter	O.D.	Free Length	No. of Coils
A	Shift valve D spring	0.8 (0.031)	5.6 (0.220)	28.1 (1.106)	15.9
B	4th accumulator spring B	2.3 (0.091)	12.2 (0.480)	31.5 (1.240)	6.6
C	4th accumulator spring A	2.4 (0.094)	18.6 (0.732)	49.0 (1.929)	7.1
D	2nd accumulator spring B	2.1 (0.083)	10.8 (0.425)	34.0 (1.339)	8.2
E	2nd accumulator spring A	2.1 (0.083)	16.6 (0.654)	48.7 (1.917)	8.4
F	5th accumulator spring	2.5 (0.098)	14.6 (0.575)	29.9 (1.177)	4.9

Shift Solenoid Valve Removal and Installation

NOTE:
- Do not hold the shift solenoid connector to remove and to install the shift solenoid valves. Hold the shift solenoid valve body.
- Do not install shift solenoid valve A before installing shift solenoid valve D, and do not install shift solenoid valve B before solenoid valve E. If solenoid valves A and B are installed before solenoid valves D and E, it may damage the hydraulic control system.

1. Remove the shift solenoid valves by holding the solenoid valve body.

2. Install new O-rings (F) on each shift solenoid valves.

   NOTE: A new solenoid valve comes with new O-rings. If you install a new solenoid valve, use the O-rings provided on it.

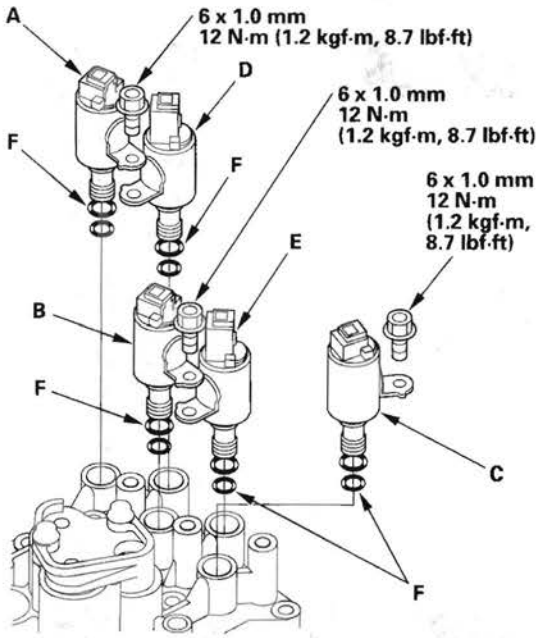

3. Install shift solenoid valve D by holding the shift solenoid valve body; be sure to install mounting bracket contacts the servo body.

4. Install shift solenoid valve A by holding the shift solenoid valve body; be sure to install mounting bracket contacts the bracket on shift solenoid valve D.

5. Install shift solenoid valve E by holding the shift solenoid valve body; be sure to install mounting bracket contacts the servo body.

6. Install shift solenoid valve B by holding the shift solenoid valve body; be sure to install mounting bracket contacts the bracket on shift solenoid valve E.

7. Install shift solenoid valve C by holding the shift solenoid valve body; be sure to install mounting bracket contacts the servo body.

Mainshaft Bearing and Oil Seal Replacement

Special Tools Required
- Adjustable bearing puller, 25—40 mm 07736-A01000B or 07736-A01000A
- Attachment, 62 x 68 mm 07746-0010500
- Attachment, 72 x 75 mm 07746-0010600
- Driver 07749-0010000

1. Remove the mainshaft bearing and oil seal using the adjustable bearing puller and a commercially available 3/8 "-16 slide hammer (A).

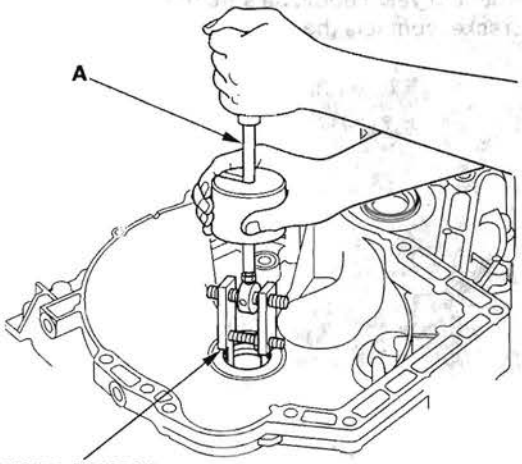

2. Install the new mainshaft bearing until it bottoms in the torque converter housing using the driver and the attachment (62 x 68 mm).

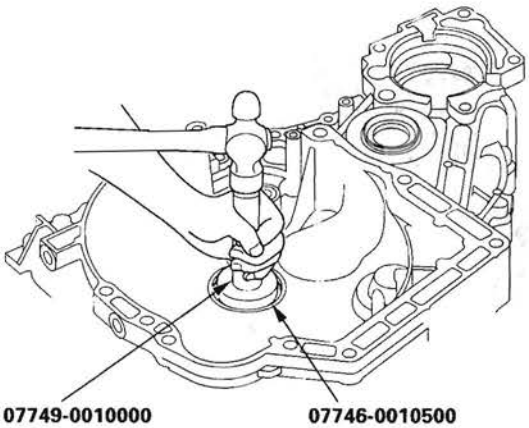

3. Install the new oil seal flush with the housing using the driver and the attachment (72 x 75 mm).

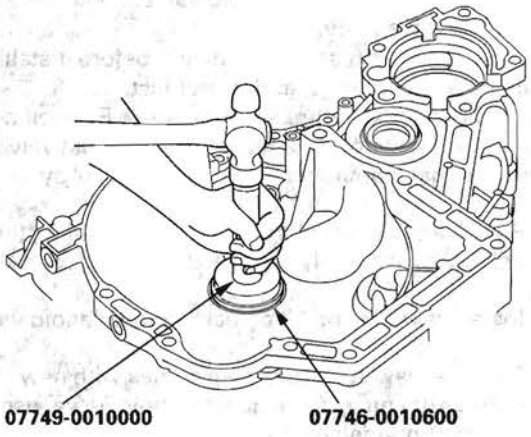

Countershaft Bearing Replacement

Special Tools Required
- Adjustable bearing puller, 25—40 mm 07736-A01000B or 07736-A01000A
- Driver 07749-0010000
- Attachment, 62 x 68 mm 07746-0010500

1. Remove the countershaft bearing using the adjustable bearing puller and a commercially available 3/8 "-16 slide hammer (A).

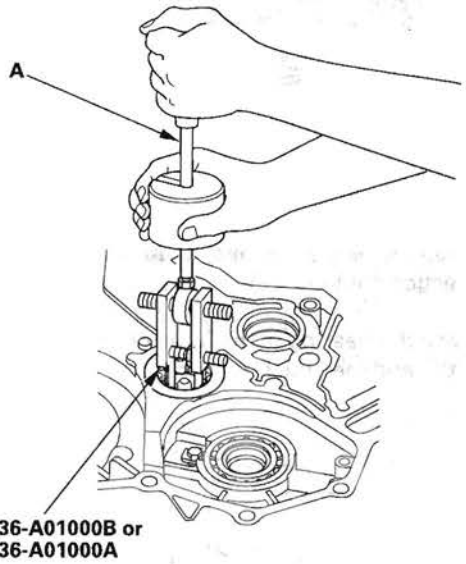

2. Remove the ATF guide plate (A), and check it for wear and damage. If the guide plate is worn or damaged, replace it.

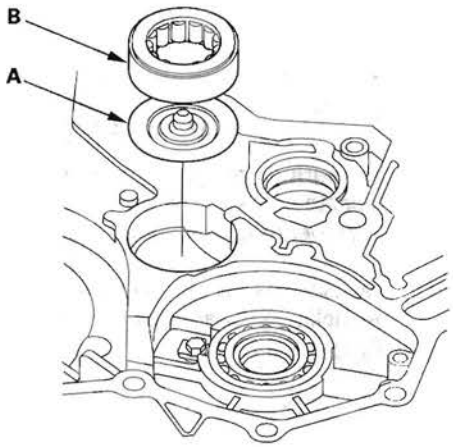

3. Install the ATF guide plate in the housing, and install the new countershaft bearing (B).

4. Install the bearing securely in the housing using the driver and the attachment (62 x 68 mm).

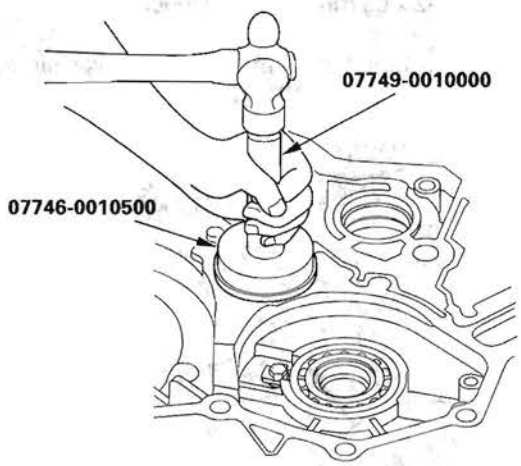

5. Make sure that the bearing outer race notch-cut (A) is installed at a height of 0—0.05 mm (0—0.002 in.) (B) above the housing surface (C). Do not install the bearing higher than 0.05 mm (0.002 in.) above the housing surface.

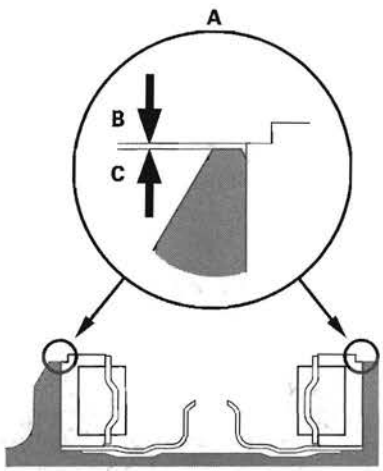

Secondary Shaft Bearing Replacement

Special Tools Required
- Driver 07749-0010000
- Attachment, 62 x 68 mm 07746-0010500

1. Remove the bolt, then remove the lock washer (A) and bearing set plate (B).

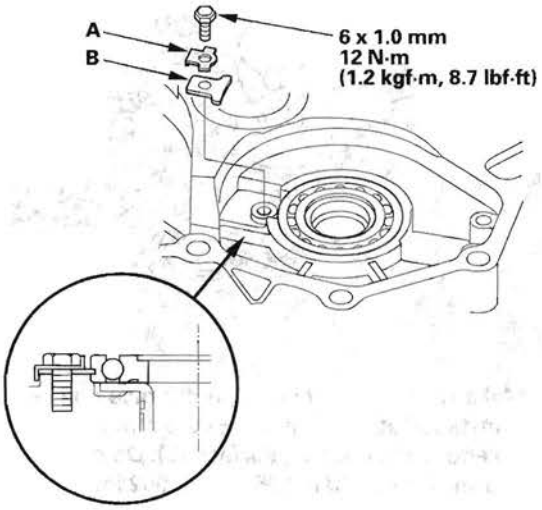

2. Remove the secondary shaft bearing (A) by heating the housing to about 212 °F (100 °C) with a heat gun (B). Do not heat the housing in excess of 212 °F (100 °C).

   NOTE: Let the housing cool to normal temperature before installing the bearing.

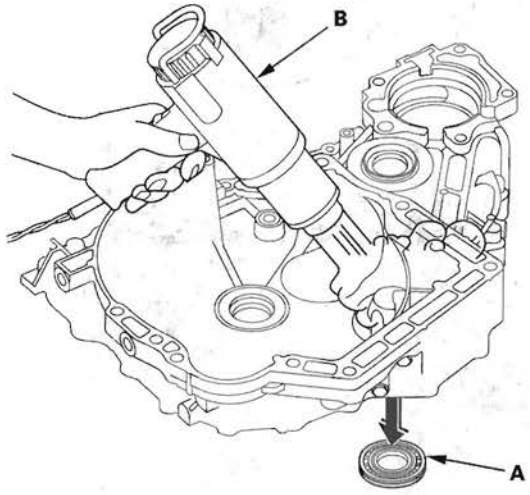

3. Install the new O-rings (A) on the ATF guide collar (B), then install the ATF guide collar in the housing.

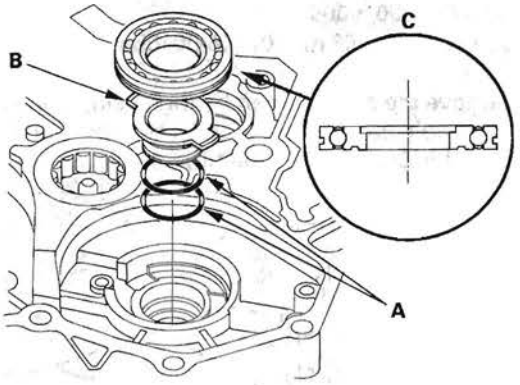

4. Install the new secondary shaft bearing (C) in the direction shown.

5. Install the bearing in the housing securely using the driver and the attachment (62 x 68 mm).

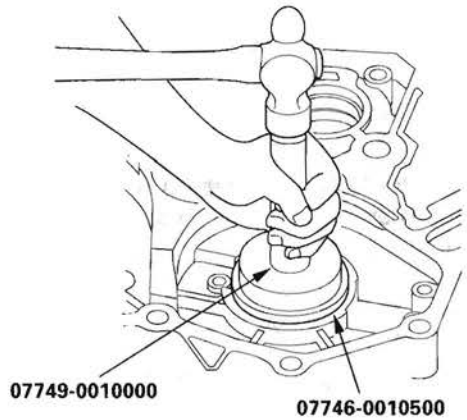

6. Check that the bearing groove aligns with the housing surface, then install the bearing set plate with aligning the bearing groove.

7. Install the new lock washer and bolt, then bend the lock tab of the lock washer against the bolt head.

Selector Control Shaft Oil Seal Replacement

Special Tools Required
- Driver 07749-0010000
- Oil seal driver attachment 07947-ZV00100

1. Remove the oil seal (A) from the torque converter housing.

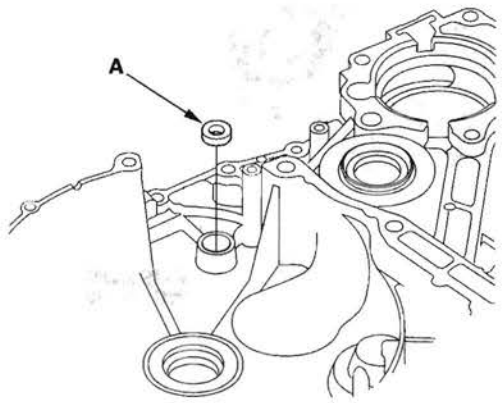

2. Install the new oil seal (A) in the torque converter housing to a depth of 0.5—1.5 mm (0.02—0.06 in.) (B) below the housing surface using the driver and the oil seal driver attachment.

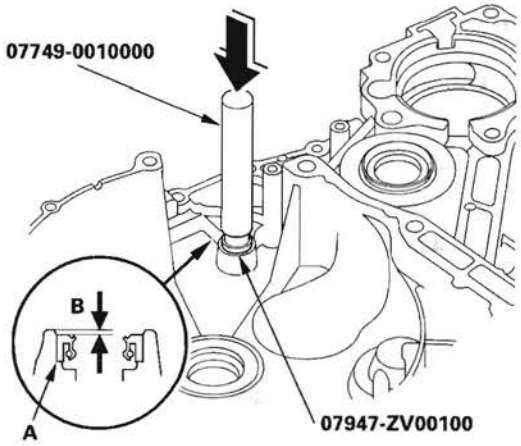

Mainshaft Disassembly, Inspection, and Reassembly

1. Inspect the thrust needle bearing and the needle bearing for galling and rough movement.

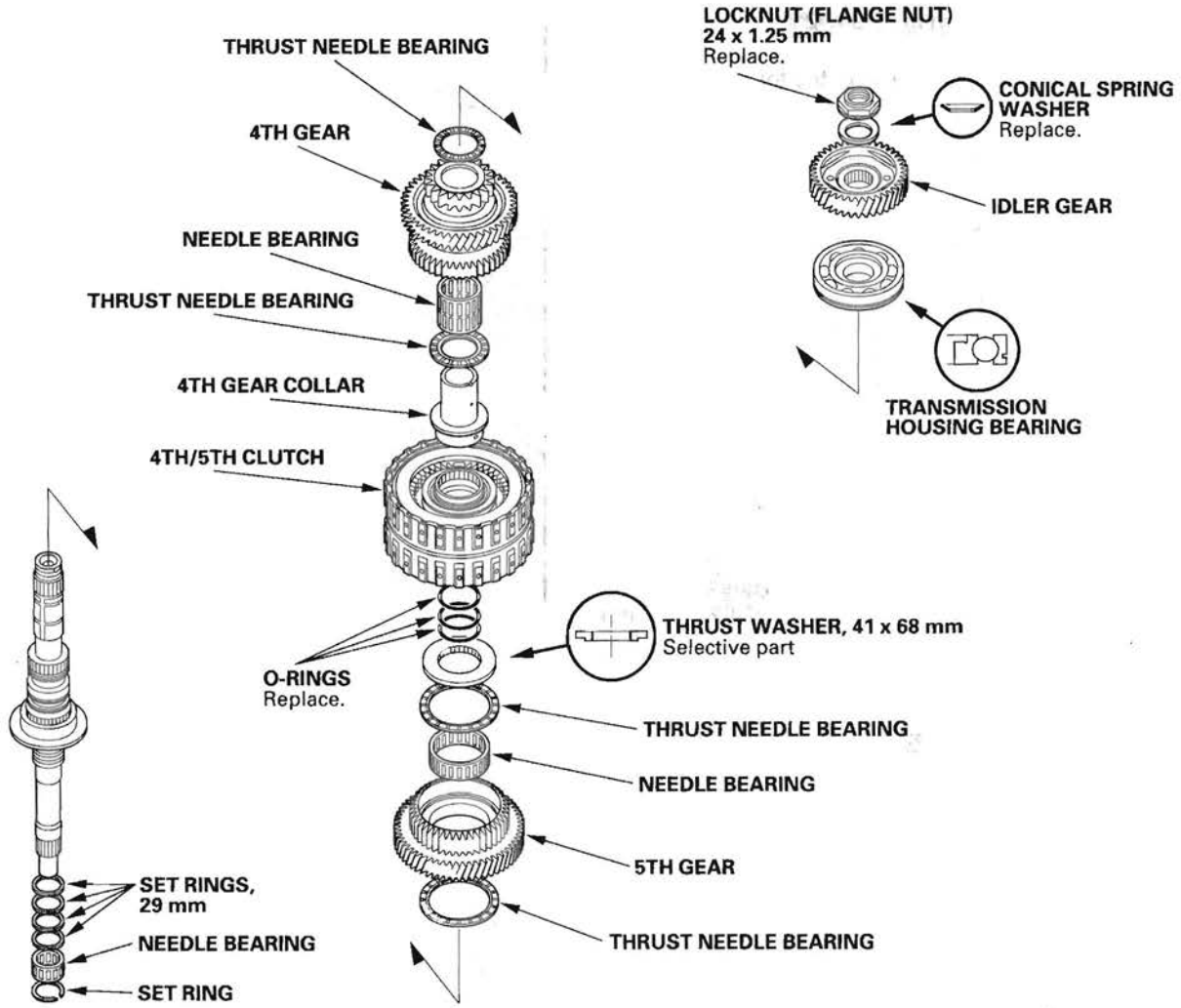

2. Inspect the splines for excessive wear and damage.
3. Check shaft bearing surface for scoring and excessive wear.
4. Before installing the O-rings, wrap the shaft splines with tape to prevent O-ring damage.
5. Lubricate all parts with ATF during assembly.
6. Install the conical spring washer, 41 x 68 mm thrust washer in the direction shown.
7. Replace the locknut and conical spring washer with new ones when assembling the transmission.
8. Check the 5th gear clearance (see page 14-349).

Mainshaft 5th Gear Axial Clearance Inspection

1. Remove the mainshaft transmission housing bearing (see page 14-332).

2. Install the thrust needle bearing (A), 5th gear (B), needle bearing (C), thrust needle bearing (D), 41 x 68 mm thrust washer (E), 4th/5th clutch (F), 4th gear collar (G), and transmission housing bearing (H) on the mainshaft (I). Do not install the O-rings during inspection.

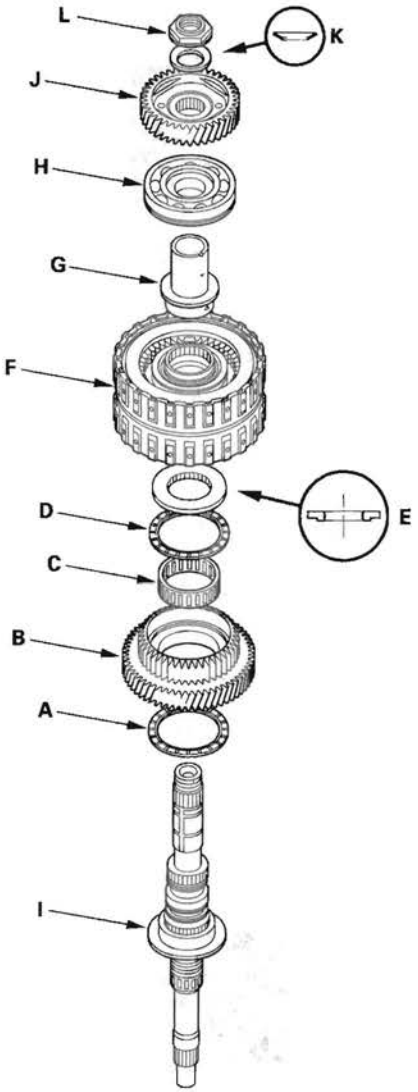

3. Install the idler gear (J) on the mainshaft by a press, then install the conical spring washer (K) and locknut (L).

4. Tighten the locknut to 29 N·m (3.0 kgf·m, 22 lbf·ft).

5. Set the dial indicator (A) on the 5th gear (B).

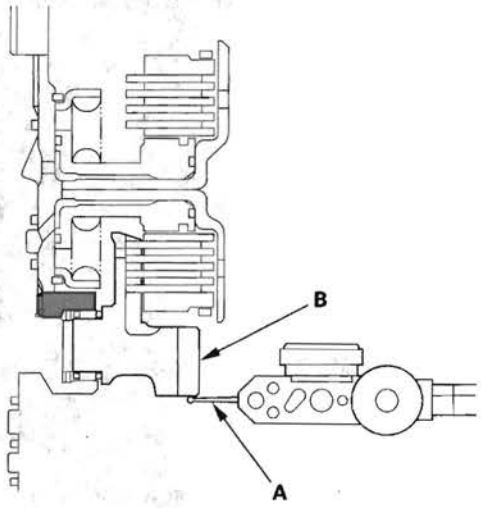

6. Lift the 5th gear (A) up while holding the mainshaft, and use the dial indicator (B) to read the 5th gear axial clearance.

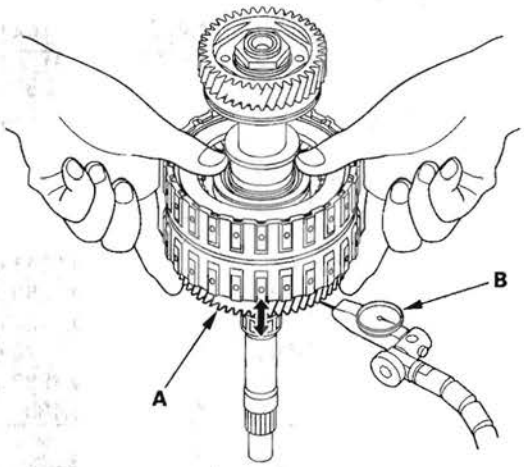

7. Measure the 5th gear axial clearance in at least three places while moving the 5th gear. Use the average as the actual clearance.

Standard: 0.04—0.10 mm (0.002—0.004 in.)

(cont'd)

Mainshaft 5th Gear Axial Clearance Inspection (cont'd)

8. If the clearance is out of standard, remove the 41 x 68 mm thrust washer and measure its thickness (A).

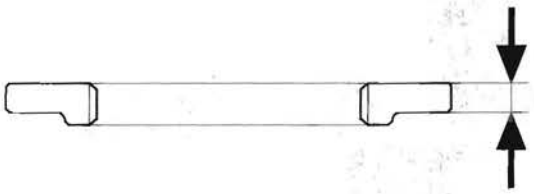

9. Select and install a new thrust washer, then recheck.

THRUST WASHER, 41 x 68 mm

No.	Part Number	Thickness
1	90414-RCT-000	4.450 mm (0.1752 in.)
2	90415-RCT-000	4.475 mm (0.1762 in.)
3	90416-RCT-000	4.500 mm (0.1772 in.)
4	90417-RCT-000	4.525 mm (0.1781 in.)
5	90418-RCT-000	4.550 mm (0.1791 in.)
6	90419-RCT-000	4.575 mm (0.1801 in.)
7	90420-RCT-000	4.600 mm (0.1811 in.)
8	90421-RCT-000	4.625 mm (0.1821 in.)
9	90422-RCT-000	4.650 mm (0.1831 in.)
10	90423-RCT-000	4.675 mm (0.1841 in.)
11	90424-RCT-000	4.700 mm (0.1850 in.)
12	90425-RCT-000	4.725 mm (0.1860 in.)
13	90426-RCT-000	4.750 mm (0.1870 in.)
14	90427-RCT-000	4.775 mm (0.1880 in.)
15	90428-RCT-000	4.800 mm (0.1890 in.)

10. After replacing the thrust washer, make sure the clearance is within the standard.

11. Disassemble the installed parts from the mainshaft.

12. Reinstall the bearing in the transmission housing (see page 14-333).

Countershaft Disassembly, Inspection, and Reassembly

1. Inspect the thrust needle bearing and the needle bearing for galling and rough movement.

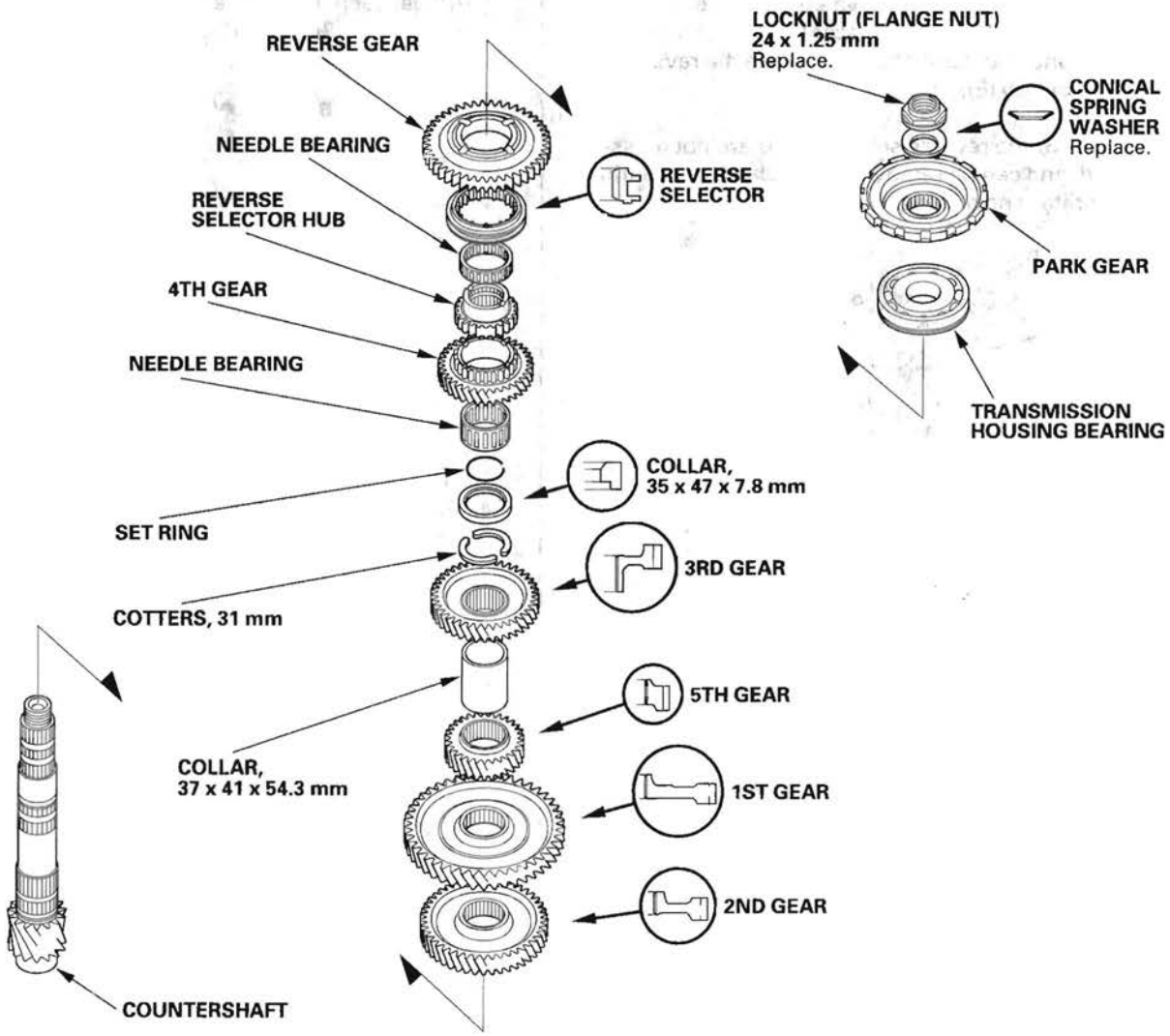

2. Inspect the splines for excessive wear and damage.
3. Check shaft bearing surface for scoring and excessive wear.
4. Lubricate all parts with ATF during assembly.
5. Install the conical spring washer, reverse selector, 35 x 47 x 7.8 mm collar, and all gears in the direction shown.
6. Replace the locknut and conical spring washer with new ones when assembling the transmission. The countershaft locknut has left-hand threads.
7. Some reverse selector hubs, and the 3rd gear are press-fitted to the countershaft; special tools are needed to remove them (see page 14-352) and to install them (see page 14-353).

Countershaft Reverse Selector Hub and 3rd Gear Removal

1. Install a commercially available bearing separator (A) on the 4th gear (B). Set a press on the countershaft (C) with a spacer (D) between the press and countershaft, and remove the reverse selector hub (E).

   NOTE: Some reverse selector hubs are not press-fitted, and can be removed without using a bearing separator and a press.

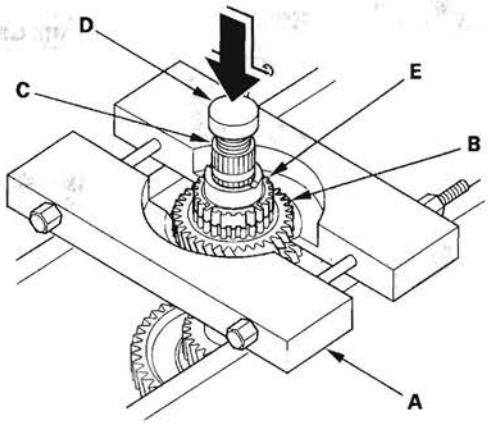

2. Remove the needle bearing, set ring, 35 x 47 x 7.8 mm collar, and cotters.

3. Set the press on the countershaft (A) with a spacer (B) between the press and countershaft, and remove the 3rd gear (C).

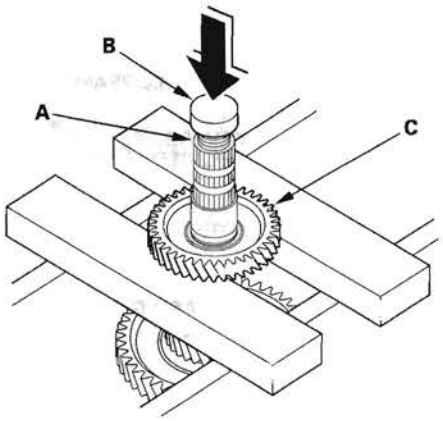

4. Remove the 37 x 41 x 54.3 mm collar, 5th gear, 1st gear, and 2nd gear.

Countershaft 3rd Gear and Reverse Selector Hub Installation

Special Tools Required
Driver, 40 mm I.D. 07746-0030100

1. Install the 2nd gear, 1st gear, 5th gear, and 37 x 41 x 54.3 mm collar on the countershaft.

2. Slide the 3rd gear (A) over the countershaft, and press it in place using the driver (40 mm I.D.) and a press.

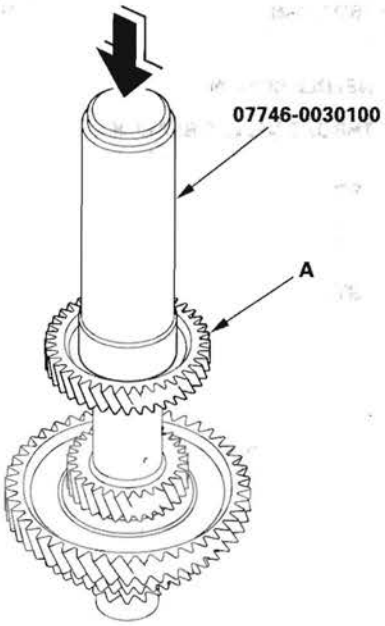

3. Install the cotters, 35 x 47 x 7.8 mm collar, set ring, needle bearing, and 4th gear.

4. Slide the reverse selector hub (A) over the countershaft, then press it in place using the driver (40 mm I.D.) and a press.

   NOTE: Some reverse selector hubs are not press-fitted and can be installed without using the driver (40 mm I.D.) and a press.

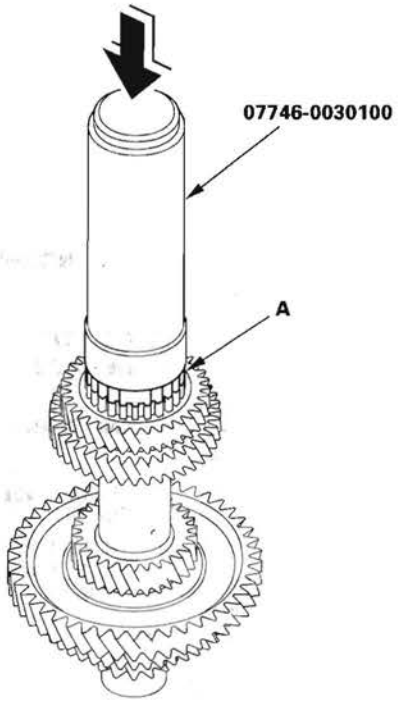

Secondary Shaft Disassembly, Inspection, and Reassembly

1. Inspect the thrust needle bearing and the needle bearing for galling and rough movement.

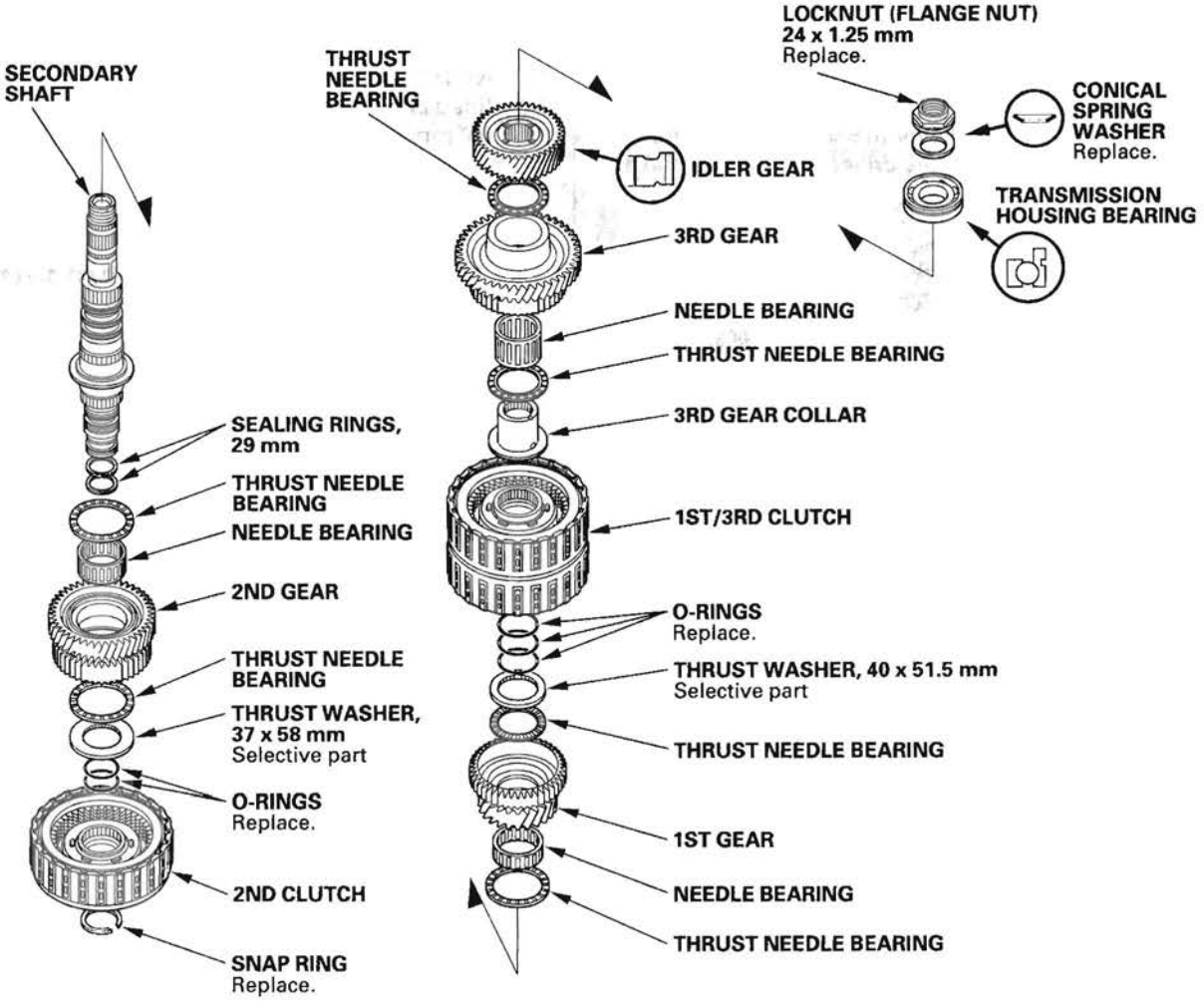

2. Inspect the splines for excessive wear and damage.
3. Check shaft bearing surface for scoring and excessive wear.
4. Before installing the O-rings, wrap the shaft splines with tape to prevent O-ring damage.
5. Lubricate all parts with ATF during assembly.
6. Install the conical spring washer, idler gear in the direction shown.
7. Replace the locknut and conical spring washer with new ones when assembling the transmission. The locknut has left-hand threads.
8. Check the 2nd gear clearance (see page 14-356) and 1st gear clearance (see page 14-358).

Secondary Shaft Ball Bearing, Idler Gear Removal and Installation

Special Tools Required
Attachment, 42 mm I.D. 07QAD-P0A0100

Removal

Place a shaft protector (A) on the secondary shaft (B), and set the puller (C) under the idler gear (D), then remove the idler gear and ball bearing (E).

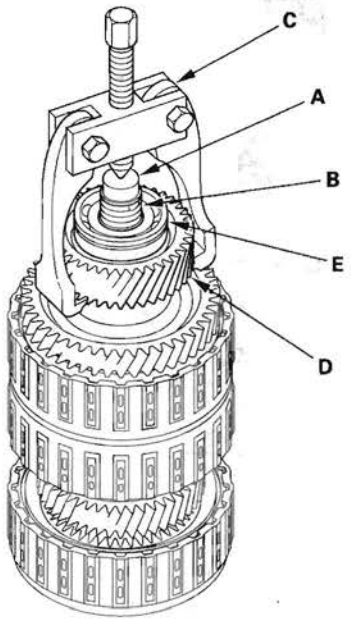

Installation

Install the idler gear (A) on the secondary shaft (B), and install the ball bearing (C) over the idler gear using the attachment (42 mm I.D.) and a press.

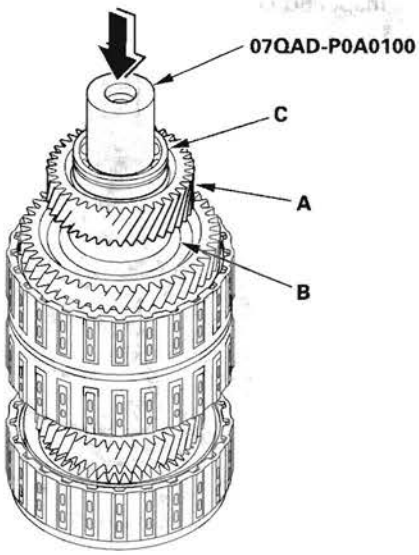

Secondary Shaft 2nd Gear Axial Clearance Inspection

1. Install the thrust needle bearing (A), needle bearing (B), 2nd gear (C), thrust needle bearing (D), 37 x 58 mm thrust washer (E), and 2nd clutch (F) on the secondary shaft (G), then secure them with the snap ring (H). Do not install the O-rings during inspection.

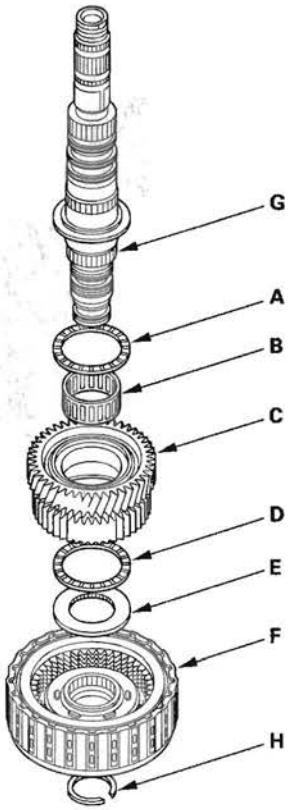

2. Measure the clearance between the snap ring (A) and the 2nd clutch guide (B) with a feeler gauge (C), in at least three places. Use the average as the actual clearance.

Standard: 0.04—0.12 mm (0.002—0.005 in.)

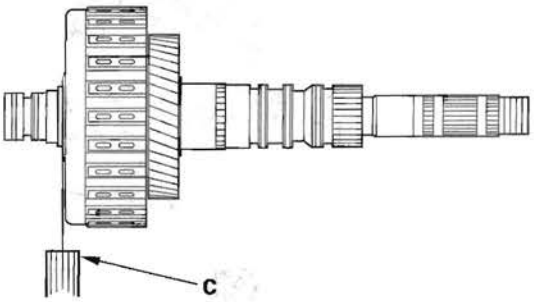

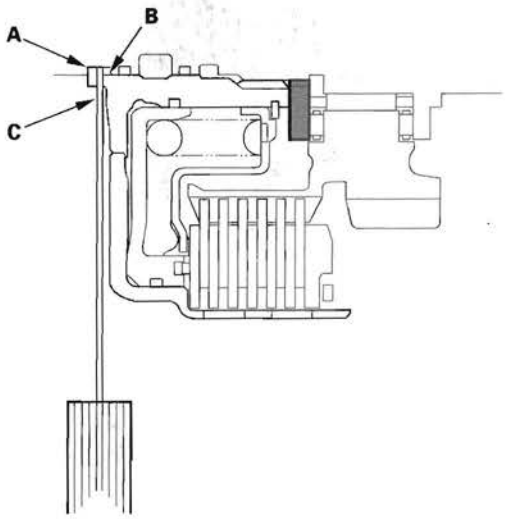

3. If the clearance is out of standard, remove the 37 x 58 mm thrust washer and measure its thickness.

4. Select and install a new thrust washer, then recheck.

THRUST WASHER, 37 x 58 mm

No.	Part Number	Thickness
1	90511-PRP-010	3.900 mm (0.154 in.)
2	90512-PRP-010	3.925 mm (0.155 in.)
3	90513-PRP-010	3.950 mm (0.156 in.)
4	90514-PRP-010	3.975 mm (0.156 in.)
5	90515-PRP-010	4.000 mm (0.157 in.)
6	90516-PRP-010	4.025 mm (0.158 in.)
7	90517-PRP-010	4.050 mm (0.159 in.)
8	90518-PRP-010	4.075 mm (0.160 in.)
9	90519-PRP-010	4.100 mm (0.161 in.)
10	90520-PRP-010	4.125 mm (0.162 in.)
11	90521-PRP-010	4.150 mm (0.163 in.)
12	90522-PRP-010	4.175 mm (0.164 in.)
13	90523-PRP-000	4.200 mm (0.165 in.)
14	90524-PRP-000	4.225 mm (0.166 in.)
15	90525-PRP-000	4.250 mm (0.167 in.)
16	90526-PRP-000	4.275 mm (0.168 in.)
17	90527-PRP-000	4.300 mm (0.169 in.)
18	90528-PRP-000	4.325 mm (0.170 in.)
19	90529-PRP-000	4.350 mm (0.171 in.)
20	90530-PRP-000	4.375 mm (0.172 in.)

5. After replacing the thrust washer, make sure the clearance is within standard.

6. Disassemble the shaft and gears.

Secondary Shaft 1st Gear Axial Clearance Inspection

Special Tools Required
Attachment, 42 mm I.D. 07QAD-P0A0100

1. Install the thrust needle bearing (A), needle bearing (B), 1st gear (C), thrust needle bearing (D), 40 x 51.5 mm thrust washer (E), 1st/3rd clutch (F), and 3rd gear collar (G) on the secondary shaft (H). Do not install the O-rings during inspection.

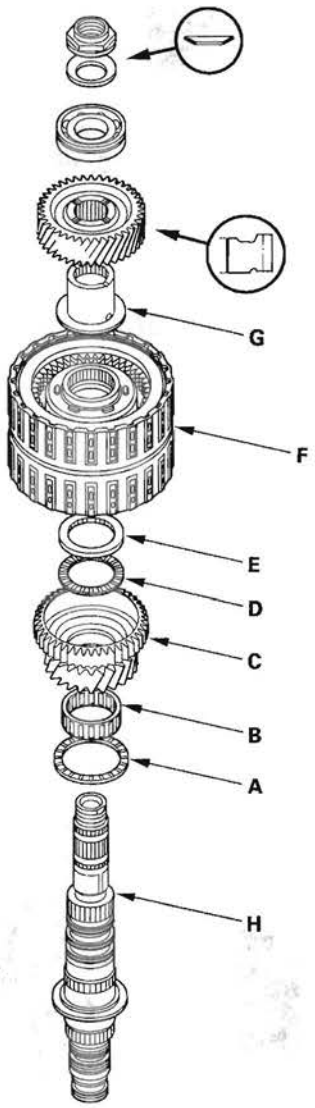

2. Install the idler gear (A), then install the ball bearing (B) on the idler gear using the attachment (42 mm I.D.) and a press.

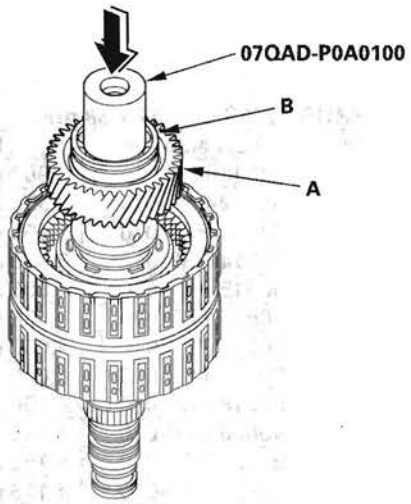

3. Install the conical spring washer and locknut, then tighten the locknut to 29 N·m (3.0 kgf·m, 22 lbf·ft).

4. Turn the secondary shaft assembly upside down, and set the dial indicator (A) on the 1st gear (B).

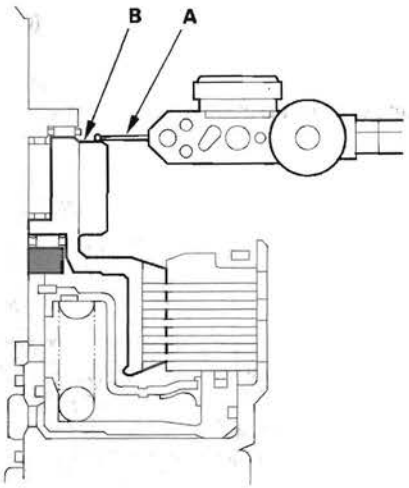

5. Lift the 1st gear (A) up while holding the secondary shaft, and use the dial indicator (B) to read the 1st gear axial clearance.

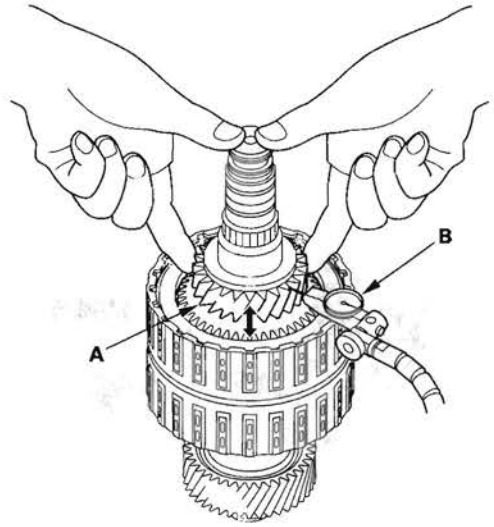

6. Measure the 1st gear axial clearance in at least three places while moving the 1st gear. Use the average as the actual clearance.

   Standard: 0.04—0.12 mm (0.002—0.005 in.)

7. If the clearance is out of standard, remove the 40 x 51.5 mm thrust washer and measure its thickness.

8. Select and install a new thrust washer, then recheck.

THRUST WASHER, 40 x 51.5 mm

No.	Part Number	Thickness
1	90503-PRP-000	4.80 mm (0.189 in.)
2	90504-PRP-000	4.85 mm (0.191 in.)
3	90505-PRP-000	4.90 mm (0.193 in.)
4	90506-PRP-000	4.95 mm (0.195 in.)
5	90507-PRP-000	5.00 mm (0.197 in.)
6	90508-PRP-000	5.05 mm (0.199 in.)

9. After replacing the thrust washer, make sure the clearance is within standard.

10. Disassemble the shaft and gears.

Idler Gear Shaft Removal and Installation

1. Remove the snap ring (A), cotter retainer (B), and cotter keys (C). Do not distort the snap ring.

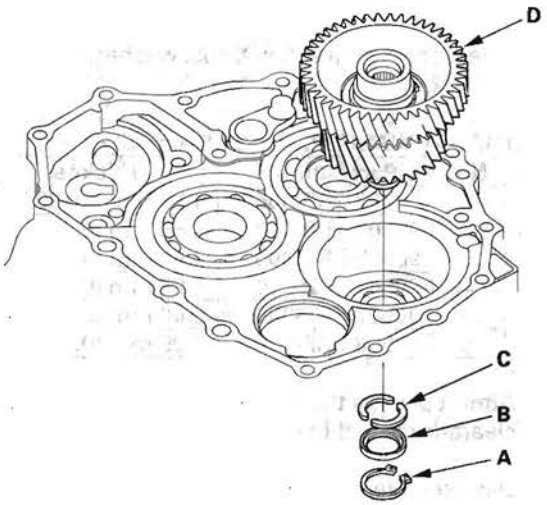

2. Remove the idler gear shaft/idler gear assembly (D) from the transmission housing.

3. Check the snap rings and cotter retainer for wear and damage. Replace them if they are worn, distorted, or damaged.

4. Install the idler gear and shaft in the reverse order of removal.

Idler Gear/Idler Gear Shaft Replacement

Special Tools Required
- Attachment, 32 x 35 mm 07746-0010100
- Driver 07749-0010000

1. Remove the snap ring from the idler gear/idler shaft assembly.

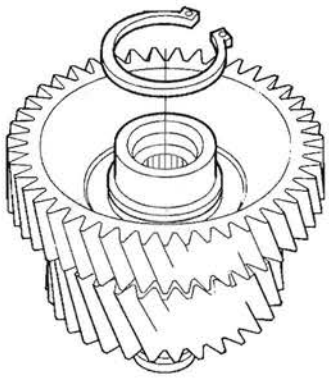

2. Remove the idler gear shaft (A) from the idler gear (B) using the driver, the attachment (32 x 35 mm), and a press.

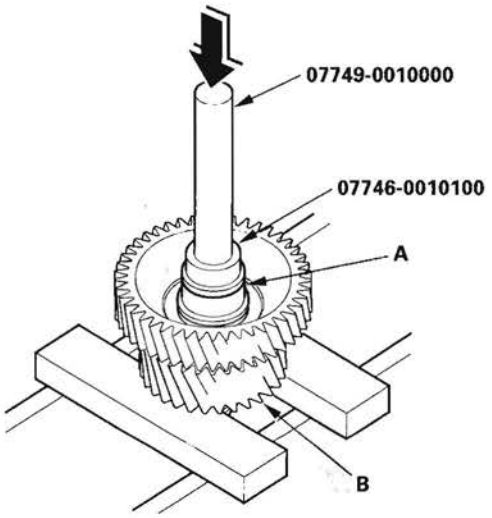

3. Replace the idler gear or idler gear shaft, and attach the idler gear shaft to the idler gear.

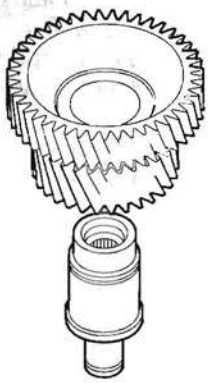

4. Install the idler gear shaft (A) in the idler gear (B) using the driver, the attachment (32 x 35 mm), and a press.

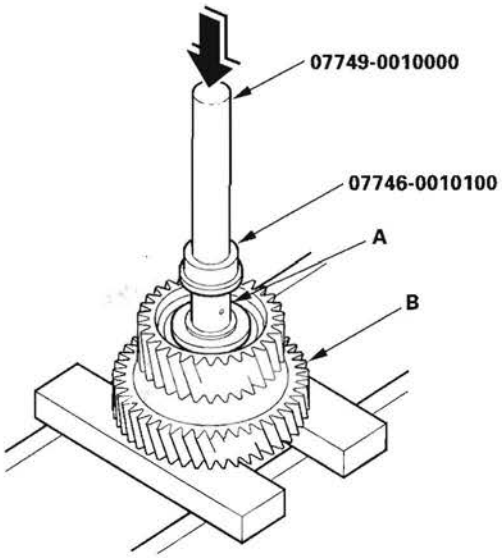

5. Install the snap ring.

1st, 2nd, and 3rd Clutch Disassembly

NOTE: The 1st, 2nd, and 3rd clutch packs have a clutch pressure release cavity between the spring retainer and clutch piston. An oil seal is installed on the circumference of the spring retainer, and seals the clutch piston. If you remove the spring retainer from the piston, it will damage the oil seal when reinstalling the retainer on the piston.

1. Remove the snap ring with a screwdriver.

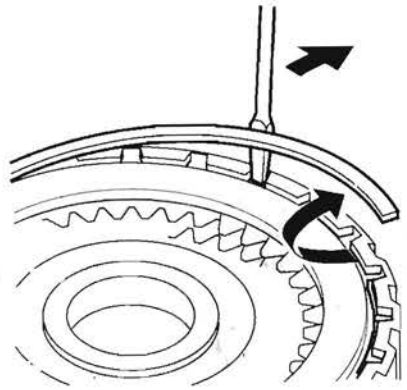

2. Remove the clutch end plate (A), clutch discs (B) (5), clutch wave-plates (C) (4), clutch flat-plate (D) (1), and wave spring (E) from the 1st clutch drum (F).

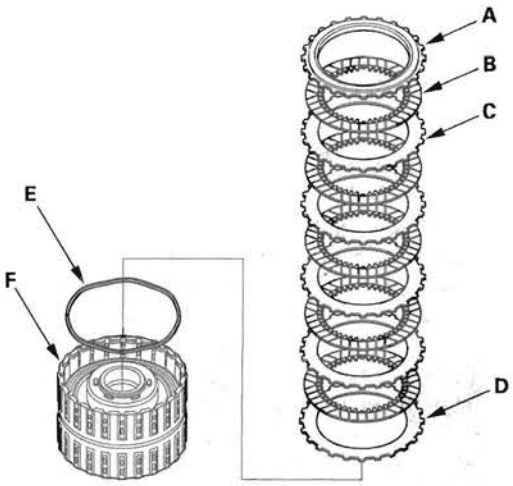

3. Make a reference mark on the flat-plate.

4. Remove the clutch end plate (A), clutch discs (B) (6), clutch wave-plates (C) (5), clutch flat-plate (D) (1), and wave spring (E) from the 2nd clutch drum (F).

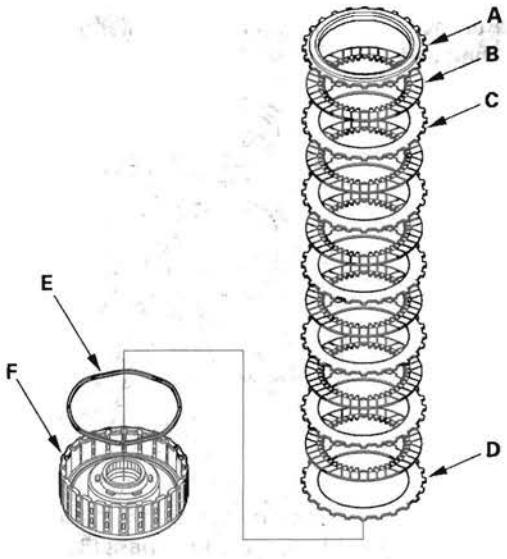

5. Make a reference mark on the flat-plate.

6. Remove the clutch end plate (A), clutch discs (B) (6), clutch wave-plates (C) (5), clutch flat-plate (D) (1), and wave spring (E) from the 3rd clutch drum (F).

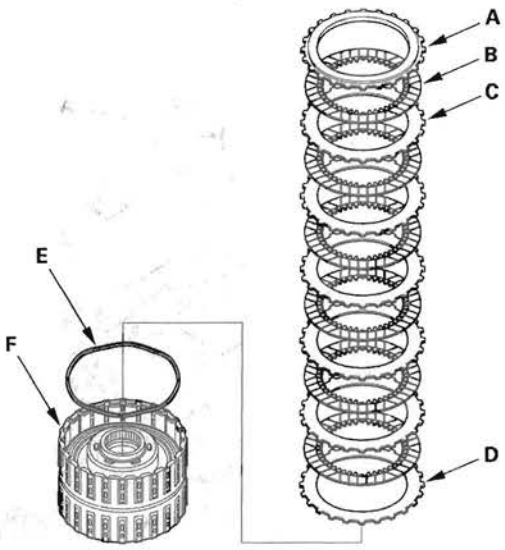

7. Make a reference mark on the flat-plate.

4th and 5th Clutch Disassembly

Special Tools Required
- Clutch spring compressor attachment 07LAE-PX40100 or 07HAE-PL50101
- Clutch spring compressor bolt assembly 07GAE-PG40200 or 07GAE-PG4020A

1. Remove the snap ring with a screwdriver.

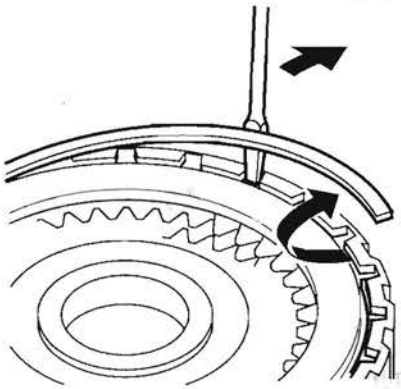

2. Remove the clutch end plate (A), clutch discs (B) (4), clutch wave-plates (C) (4), and wave spring (D) from the 4th clutch drum (E).

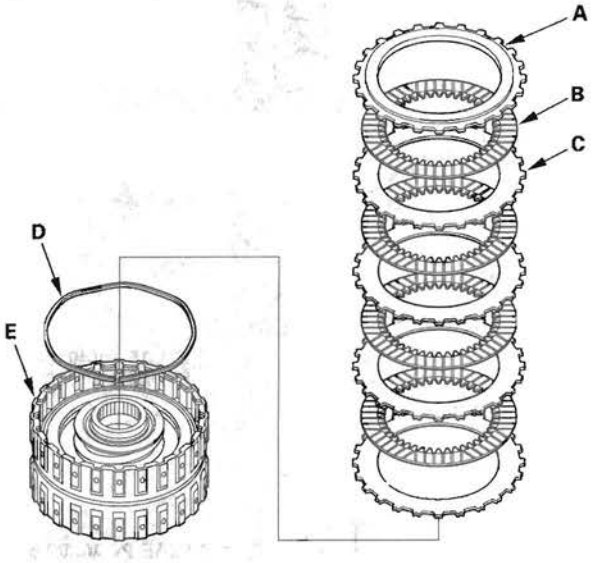

3. Remove the clutch end plate (A), clutch discs (B) (4), clutch wave-plates (C) (4), and wave spring (D) from the 5th clutch drum (E).

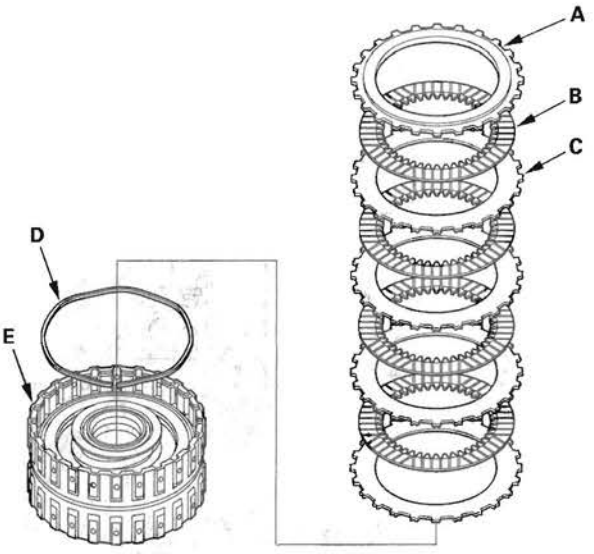

(cont'd)

4th and 5th Clutch Disassembly (cont'd)

4. Install the clutch spring compressor attachments and the clutch spring compressor bolt assembly.

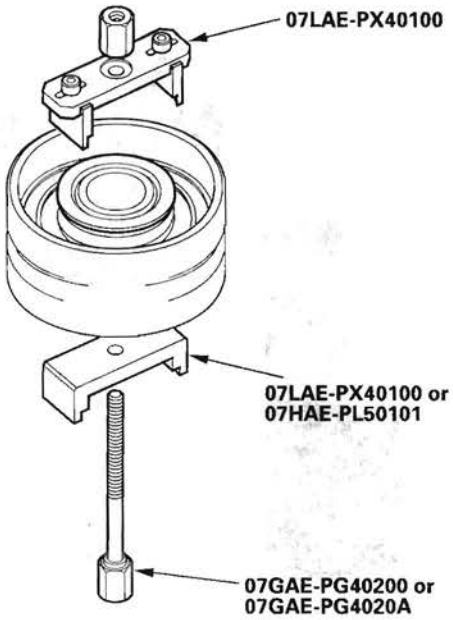

5. Be sure the clutch spring compressor attachment (A) is adjusted to have full contact with the return spring retainer (B).

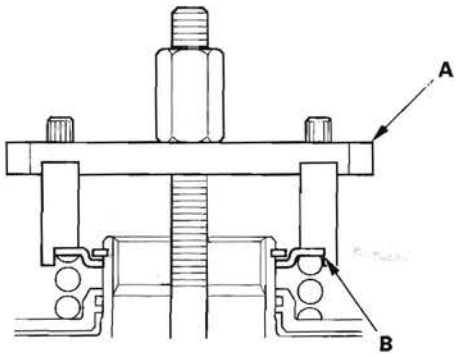

6. If either end of the clutch spring compressor attachment is set over an area of the spring retainer that is unsupported by the return spring, the retainer may be damaged.

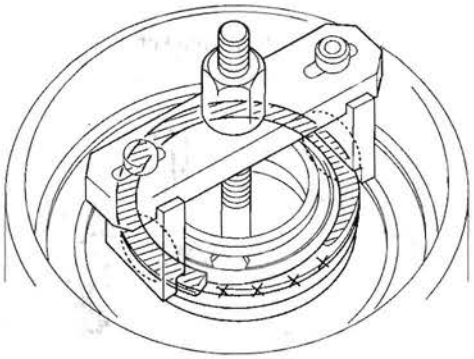

7. Compress the return spring until the snap ring can be removed.

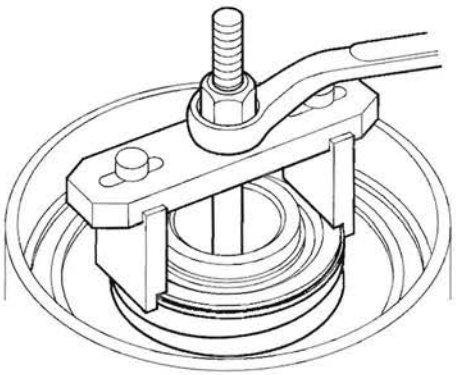

8. Remove the snap ring with the snap ring pliers.

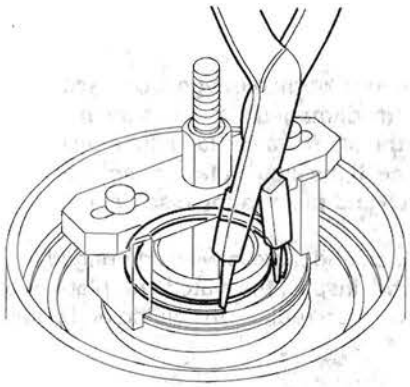

9. Remove the clutch spring compressor attachments and the clutch spring compressor bolt assembly.

10. Remove the snap ring (A), spring retainer (B), and return spring (C).

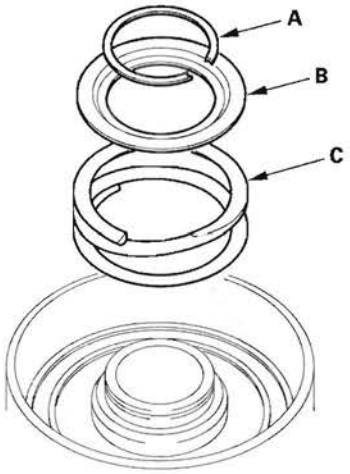

11. Wrap a shop rag around the clutch drum, and apply air pressure to the fluid passage to remove the piston. Place a finger tip on the other passage while applying air pressure.

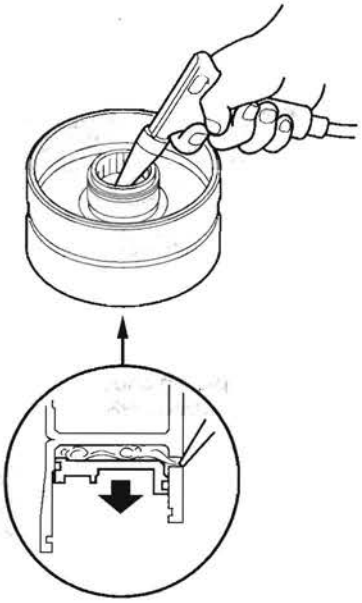

12. Remove the clutch piston (A), and remove the outer O-ring (B) and inner O-ring (C) from the piston.

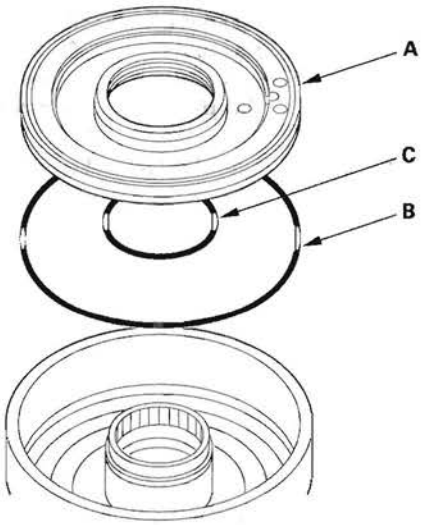

Clutch Inspection

1. Inspect the 4th and 5th clutch pistons and clutch piston check valves (A).

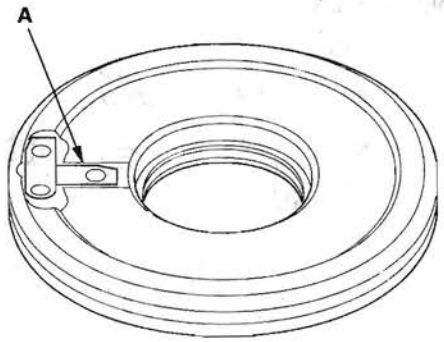

2. If the clutch piston check valve is loose or damaged, replace the clutch piston.
3. Check the spring retainer for wear and damage.
4. Inspect the clutch discs, clutch-plates, and clutch end plate for wear, damage, and discoloration.

Standard Thickness:

Clutch Discs:		**1.94 mm (0.076 in.)**
Clutch Plates:		
1st clutch (wave-plates):		**1.6 mm (0.063 in.)**
2nd clutch:	**Wave-plates:**	**2.0 mm (0.079 in.)**
	Flat-plate:	**2.0 mm (0.079 in.)**
3rd clutch:	**Wave-plates:**	**1.6 mm (0.063 in.)**
	Flat-plates:	**1.6 mm (0.063 in.)**
4th clutch (wave-plates):		**2.0 mm (0.079 in.)**
5th clutch (wave-plates):		**2.0 mm (0.079 in.)**

5. If the clutch discs are worn or damaged, replace them as a set. If the clutch discs are replaced, inspect the clutch end-plate-to-top disc clearance.
6. If any plate is worn, damaged, or discolored, replace the damaged plate with the new plate, and inspect the other wave-plates for a phase difference. If the clutch plate is replaced, inspect the clutch end-plate-to-top disc clearance.
7. If the clutch end plate is worn, damaged, or discolored, inspect the clutch end-plate-to-top disc clearance, then replace the clutch end plate.

Clutch Wave-plate Phase Difference Inspection

1. Place the clutch wave-plate (A) on a surface plate, and set a dial indicator (B) on the wave-plate.

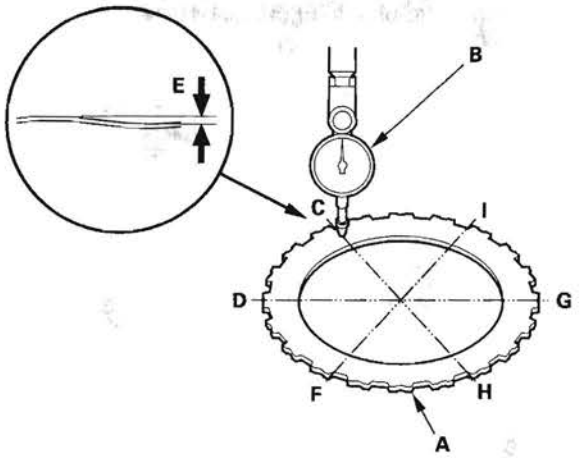

2. Find the bottom (C) of a phase difference of the wave-plate, zero the dial indicator and make a reference mark on the bottom of the wave-plate.

3. Rotate the wave-plate about 60-degrees apart from the bottom while holding the wave-plate by its circumference. The dial indicator should be at the top (D) of a phase difference. Do not rotate the wave-plate while holding its surface, always rotate it with holding its circumference.

4. Read the dial indicator. The dial indicator reads the phase difference (E) of the wave-plate between bottom and top.

   Standard Phase Difference:

1st clutch:	**0.15—0.25 mm (0.006—0.010 in.)**
2nd clutch:	**0.1—0.2 mm (0.004—0.008 in.)**
3rd clutch:	**0.1—0.2 mm (0.004—0.008 in.)**
4th clutch:	**0.1—0.2 mm (0.004—0.008 in.)**
5th clutch:	**0.1—0.2 mm (0.004—0.008 in.)**

5. Rotate the wave-plate about 60-degrees. The dial indicator should be at the bottom of a phase difference (F and G), and zero the dial indicator.

6. Measure the phase difference at the other two tops (H and I) of the wave-plate by following steps 3 thru 5.

7. If the two values of the three measurements are within the standard, the wave-plate is OK. If the two values of the three measurements are out of the standard, replace the wave-plate.

Clutch Clearance Inspection

Special Tools Required
Clutch compressor attachment 07ZAE-PRP0100

1. Inspect the clutch piston, discs, plates, and end plate for wear and damage (see page 14-366), and inspect the clutch wave-plate phase difference (see page 14-367), if necessary.

2. Install the wave spring (A) in the 1st clutch drum (B). Install the clutch flat-plate (C) (1), then starting with the clutch disc, alternately install the discs (D) (5) and wave-plates (E) (4). Install the clutch end-plate (F) with the flat side down on the top disc.

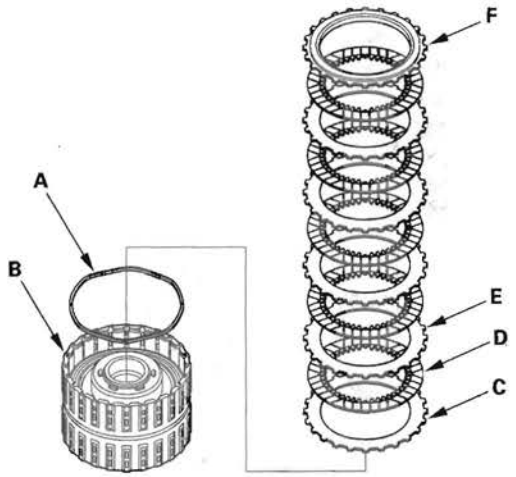

3. Install the wave spring (A) in the 2nd clutch drum (B). Install the clutch flat-plate (C) (1), then starting with the clutch disc, alternately install the discs (D) (6) and wave-plates (E) (5). Install the clutch end-plate (F) with the flat side down on the top disc.

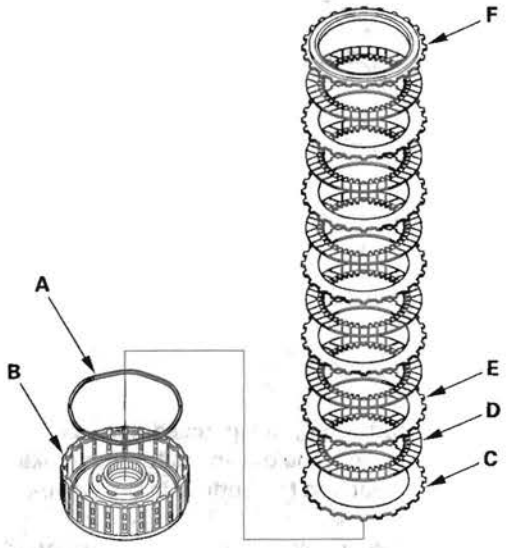

4. Install the wave spring (A) in the 3rd clutch drum (B). Install the clutch flat-plate (C) (1), then starting with the clutch disc, alternately install the discs (D) (6) and wave-plates (E) (5). Install the clutch end-plate (F) with the flat side down on the top disc.

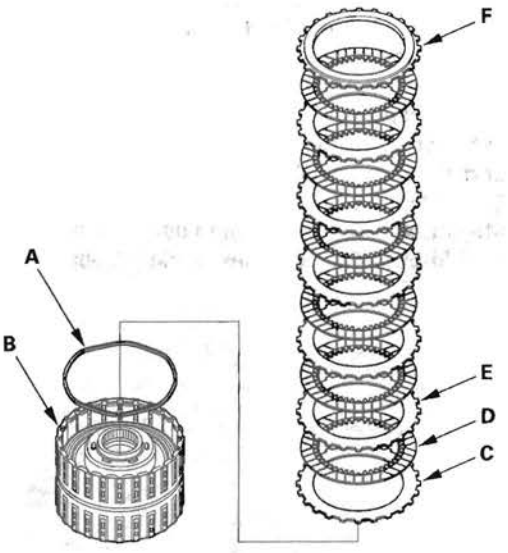

5. Install the clutch pistons in the 4th and 5th clutch drums. Do not install the O-rings during inspection.

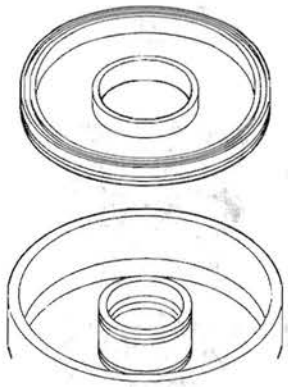

6. Install the wave spring (A) in the 4th clutch drum (B). Starting with the clutch wave-plate, alternately install the wave-plates (C) (4) and discs (D) (4). Install the clutch end-plate (E) with the flat side down on the top disc.

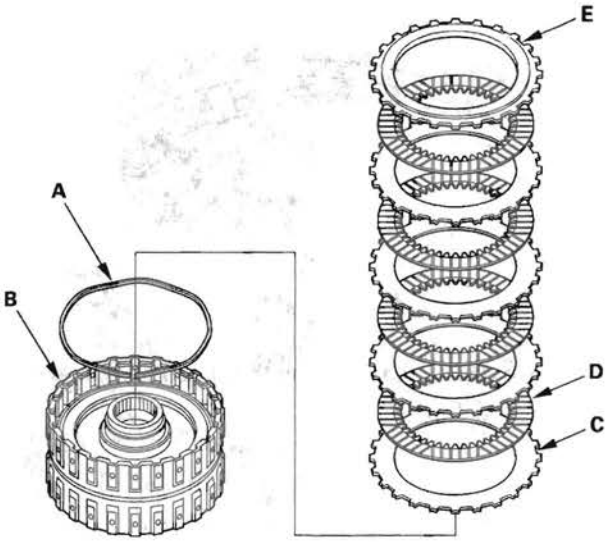

7. Install the wave spring (A) in the 5th clutch drum (B). Starting with the clutch wave-plate, alternately install the wave-plates (C) (4) and discs (D) (4). Install the clutch end-plate (E) with the flat side down on the top disc.

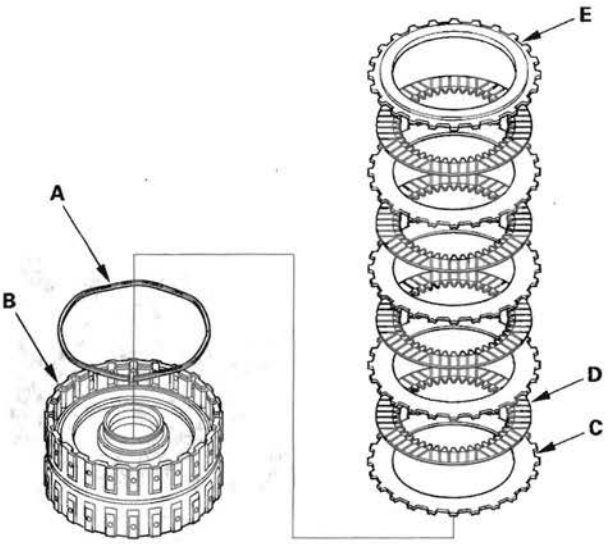

(cont'd)

Clutch Clearance Inspection (cont'd)

8. Install the snap ring with a screwdriver to secure the clutch end-plate.

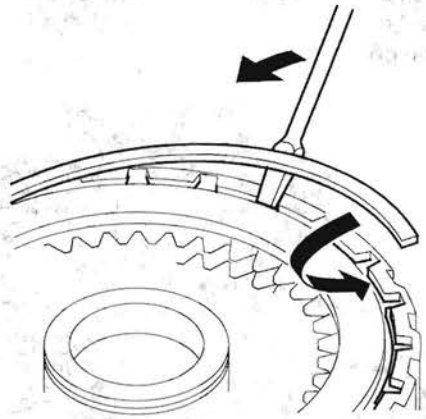

9. Set a dial indicator (A) on the clutch end-plate (B).

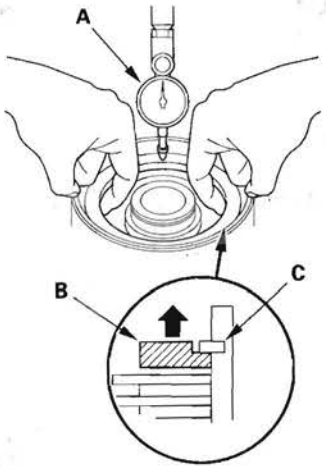

10. Zero the dial indicator with the clutch end-plate lifted up to the snap ring (C).

11. Release the clutch end-plate to lower the clutch end-plate, then put the special tool on the end-plate (A).

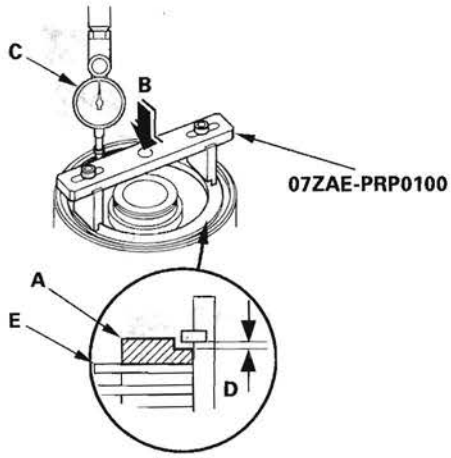

12. Press the clutch compressor attachment down with 150—160 N (15—16 kgf, 33—35 lbf) (B) using a force gauge, and read the dial indicator (C). The dial indicator reads the clearance (D) between the clutch end-plate and top disc (E). Take measurements in at least three places, and use the average as the actual clearance.

Clutch End-Plate-to-Top Disc Clearance
Service Limit:
1st Clutch: 1.38—1.58 mm (0.054—0.062 in.)
2nd Clutch: 1.18—1.38 mm (0.046—0.054 in.)
3rd Clutch: 1.23—1.43 mm (0.048—0.056 in.)
4th Clutch: 0.93—1.13 mm (0.037—0.044 in.)
5th Clutch: 0.93—1.13 mm (0.037—0.044 in.)

13. If the clearance is out of the service limit, select a new clutch end-plate from the following tables.



1ST and 2ND CLUTCH END PLATES

Mark	Part Number	Thickness
1	22571-RZK-003 or 22571-RZH-003	2.6 mm (0.102 in.)
2	22572-RZK-003 or 22572-RZH-003	2.7 mm (0.106 in.)
3	22573-RZK-003 or 22573-RZH-003	2.8 mm (0.110 in.)
4	22574-RZK-003 or 22574-RZH-003	2.9 mm (0.114 in.)
5	22575-RZK-003 or 22575-RZH-003	3.0 mm (0.118 in.)
6	22576-RZK-003 or 22576-RZH-003	3.1 mm (0.122 in.)
7	22577-RZK-003 or 22577-RZH-003	3.2 mm (0.126 in.)
8	22578-RZK-003 or 22578-RZH-003	3.3 mm (0.130 in.)
9	22579-RZK-003 or 22579-RZH-003	3.4 mm (0.134 in.)

3RD CLUTCH END PLATES

Mark	Part Number	Thickness
1	22551-RZK-003 or 22551-RZH-003	2.1 mm (0.083 in.)
2	22552-RZK-003 or 22552-RZH-003	2.2 mm (0.087 in.)
3	22553-RZK-003 or 22553-RZH-003	2.3 mm (0.091 in.)
4	22554-RZK-003 or 22554-RZH-003	2.4 mm (0.094 in.)
5	22555-RZK-003 or 22555-RZH-003	2.5 mm (0.098 in.)
6	22556-RZK-003 or 22556-RZH-003	2.6 mm (0.102 in.)
7	22557-RZK-003 or 22557-RZH-003	2.7 mm (0.106 in.)
8	22558-RZK-003 or 22558-RZH-003	2.8 mm (0.110 in.)
9	22559-RZK-003 or 22559-RZH-003	2.9 mm (0.114 in.)

4TH and 5TH CLUTCH END PLATES

Mark	Part Number	Thickness
1	22581-RZK-003 or 22581-RZH-003	2.1 mm (0.083 in.)
2	22582-RZK-003 or 22582-RZH-003	2.2 mm (0.087 in.)
3	22583-RZK-003 or 22583-RZH-003	2.3 mm (0.091 in.)
4	22584-RZK-003 or 22584-RZH-003	2.4 mm (0.094 in.)
5	22585-RZK-003 or 22585-RZH-003	2.5 mm (0.098 in.)
6	22586-RZK-003 or 22586-RZH-003	2.6 mm (0.102 in.)
7	22587-RZK-003 or 22587-RZH-003	2.7 mm (0.106 in.)
8	22588-RZK-003 or 22588-RZH-003	2.8 mm (0.110 in.)
9	22589-RZK-003 or 22589-RZH-003	2.9 mm (0.114 in.)

14. Install the new clutch end-plate, and recheck the clearance. If the thickest clutch end-plate is installed, but the clearance is still over the service limit, replace the clutch discs and plates.

1st, 2nd, and 3rd Clutch Reassembly

1. Soak the clutch discs thoroughly in ATF for a minimum of 30 minutes.
2. Install the wave spring (A) in the 1st clutch drum (B). Install the clutch flat-plate (C) (1), then starting with the clutch disc, alternately install the discs (D) (5) and wave-plates (E) (4). Install the clutch end-plate (F) with the flat side down on the top disc.

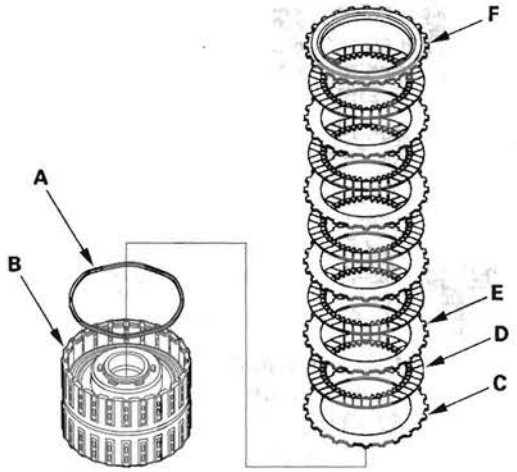

3. Install the wave spring (A) in the 2nd clutch drum (B). Install the clutch flat-plate (C) (1), then starting with the clutch disc, alternately install the discs (D) (6) and wave-plates (E) (5). Install the clutch end-plate (F) with the flat side down on the top disc.

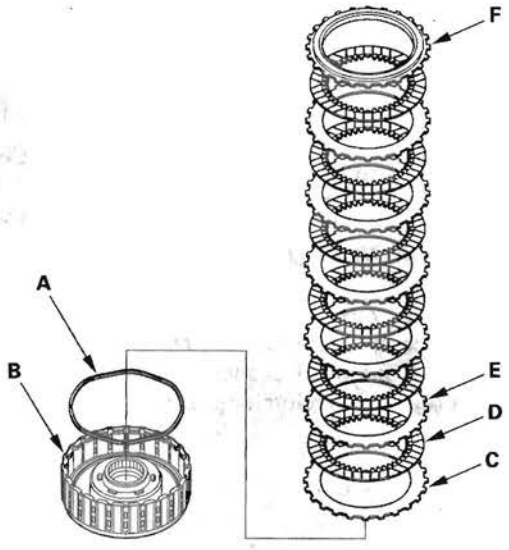

4. Install the wave spring (A) in the 3rd clutch drum (B). Install the clutch flat-plate (C) (1), then starting with the clutch disc, alternately install the discs (D) (6) and wave-plates (E) (5). Install the clutch end-plate (F) with the flat side down on the top disc.

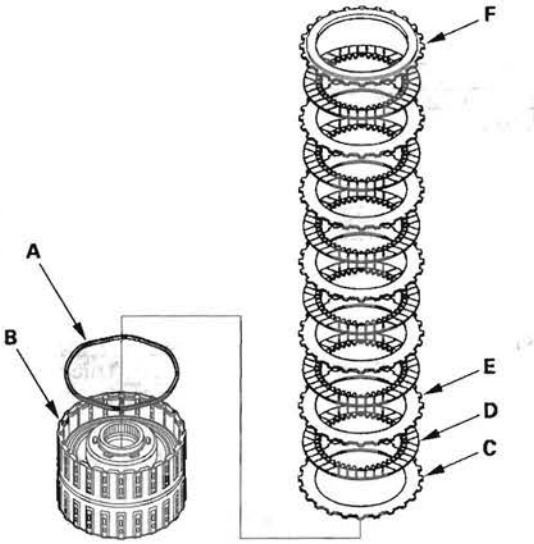

5. Install the snap ring with a screwdriver to secure the clutch end-plate.

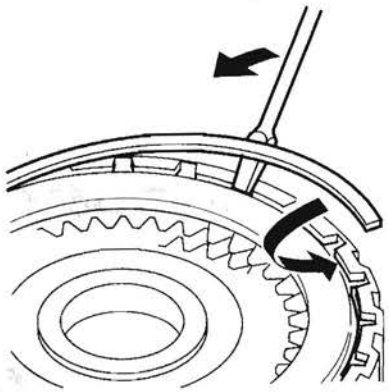

6. Check that the clutch piston moves by applying air pressure into fluid passage.

4th and 5th Clutch Reassembly

Special Tools Required
- Clutch spring compressor bolt assembly 07GAE-PG40200 or 07GAE-PG4020A
- Clutch spring compressor attachment 07LAE-PX40100 or 07HAE-PL50101

1. Soak the clutch discs thoroughly in ATF for a minimum of 30 minutes.

2. Install the new O-rings (A) on the clutch piston (B). Do not twist the O-rings.

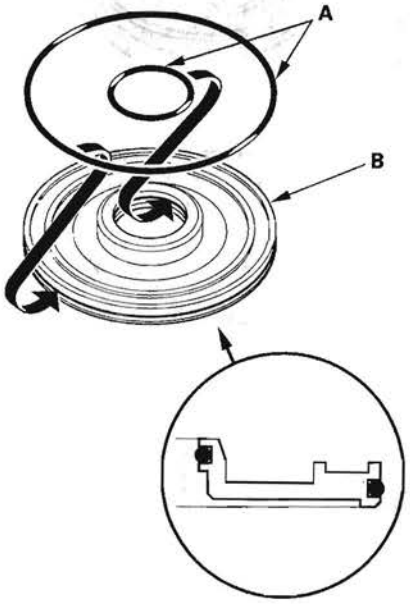

3. Install the clutch piston (A) in the clutch drum (B) while applying pressure and rotating to ensure proper seating. Do not pinch the O-ring.

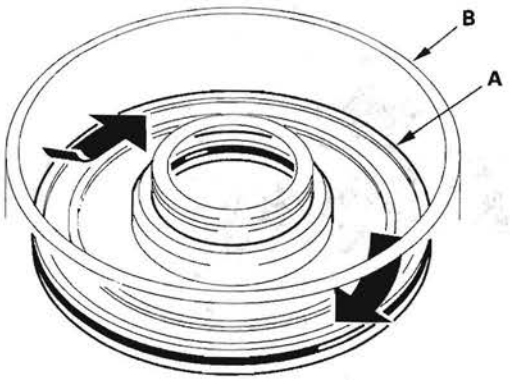

4. Install the return spring (A) and spring retainer (B), and position the snap ring (C) on the spring retainer.

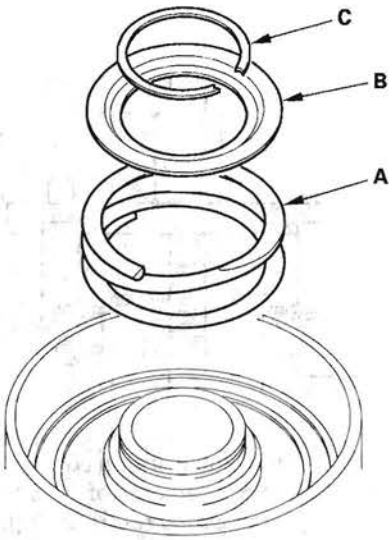

5. Install the clutch spring compressor attachments and the clutch spring compressor bolt assembly.

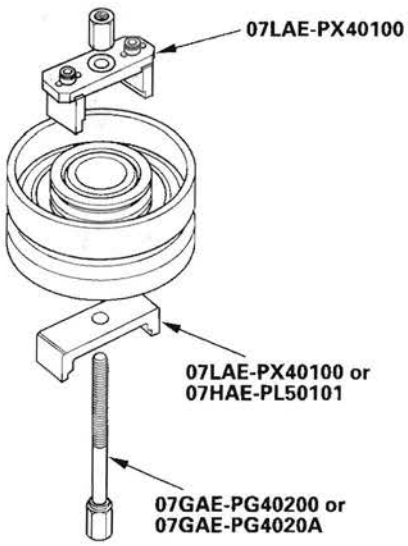

(cont'd)

4th and 5th Clutch Reassembly (cont'd)

6. Be sure the clutch spring compressor attachment (A) is adjusted to have full contact with the spring retainer (B).

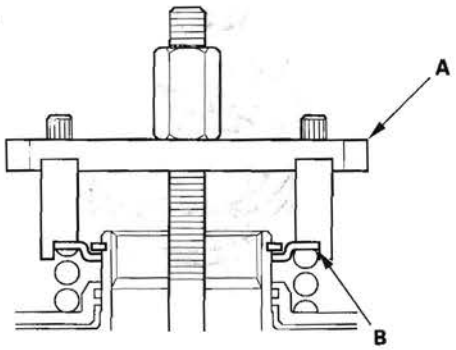

7. If either end of the clutch spring compressor attachment is set over an area of the spring retainer that is unsupported by the return spring, the retainer may be damaged.

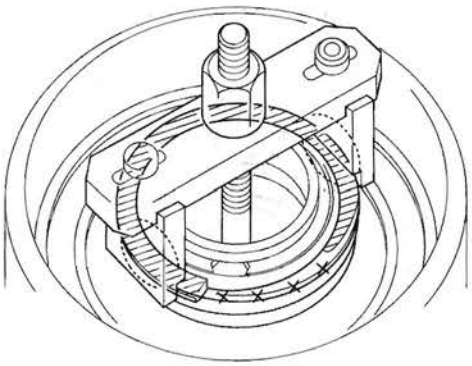

8. Compress the return spring until the snap ring can be installed.

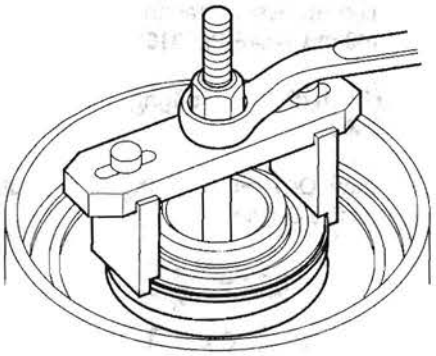

9. Install the snap ring with the snap ring pliers.

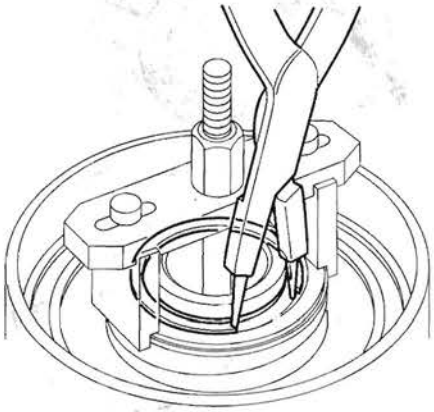

10. Remove the clutch spring compressor attachments and the clutch spring compressor bolt assembly.

11. Install the wave spring (A) in the 4th clutch drum (B). Starting with the clutch wave-plate, alternately install the wave-plates (C) (4) and discs (D) (4). Install the clutch end-plate (E) with the flat side down on the top disc.

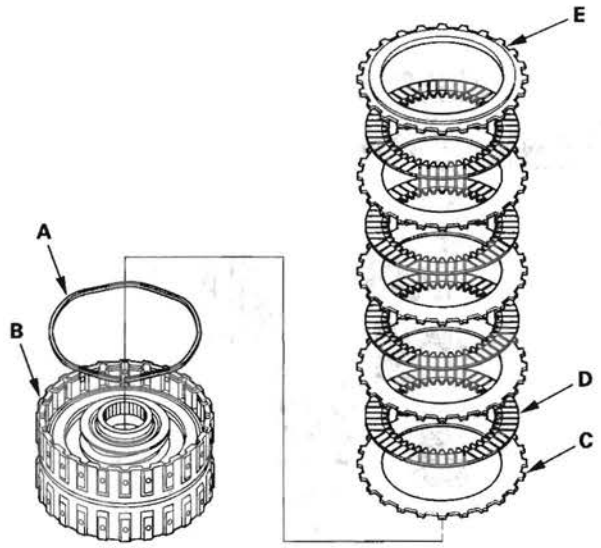

12. Install the wave spring (A) in the 5th clutch drum (B). Starting with the clutch wave-plate, alternately install the wave-plates (C) (4) and discs (D) (4). Install the clutch end-plate (E) with the flat side down on the top disc.

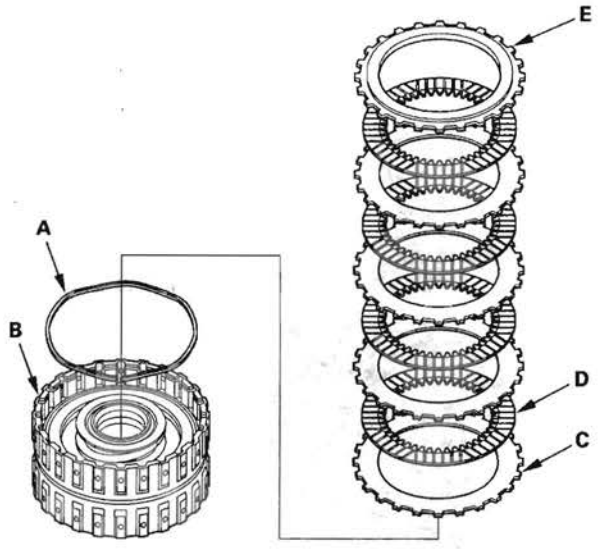

13. Install the snap ring with a screwdriver to secure the clutch end-plate.

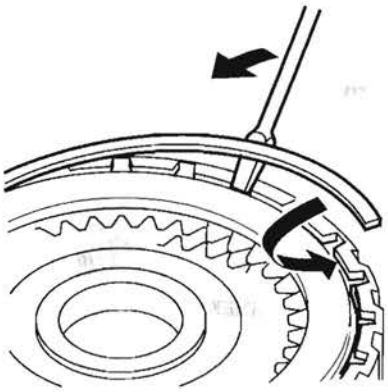

14. Check that the clutch piston moves by applying air pressure into fluid passage.

Valve Body and ATF Strainer Installation

NOTE: The illustration shows the 4WD transmission; the 2WD is similar.

1. Make sure that the ATF magnet is cleaned and installed in the torque converter housing.

Torque Specifications
6 x 1.0 mm: 12 N·m (1.2 kgf·m, 8.7 lbf·ft)
8 x 1.25 mm: 18 N·m (1.8 kgf·m, 13 lbf·ft)

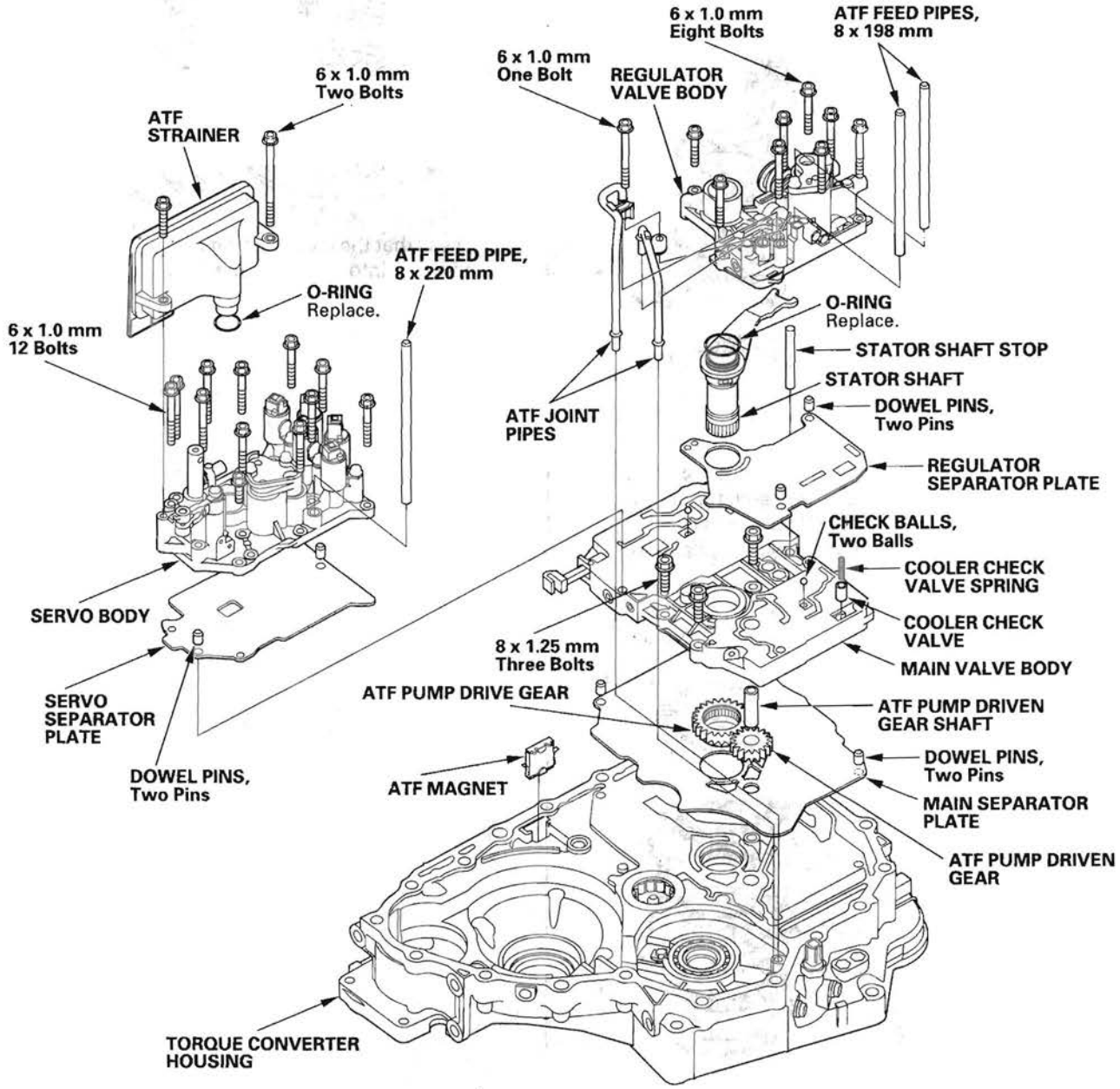

2. Install the main separator plate (A) and two dowel pins on the torque converter housing. Then install the ATF pump drive gear (B), driven gear (C), and ATF pump driven gear shaft (D). Install the ATF pump driven gear with its grooved and chamfered side facing down.

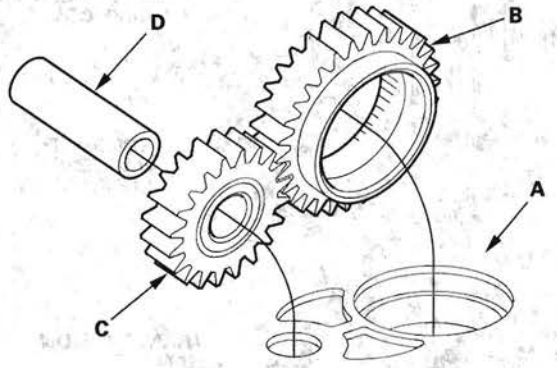

3. Install the main valve body.

4. Make sure the ATF pump drive gear (A) rotates smoothly in the normal operating direction, and the ATF pump driven gear shaft (B) moves smoothly in the axial and normal operating direction.

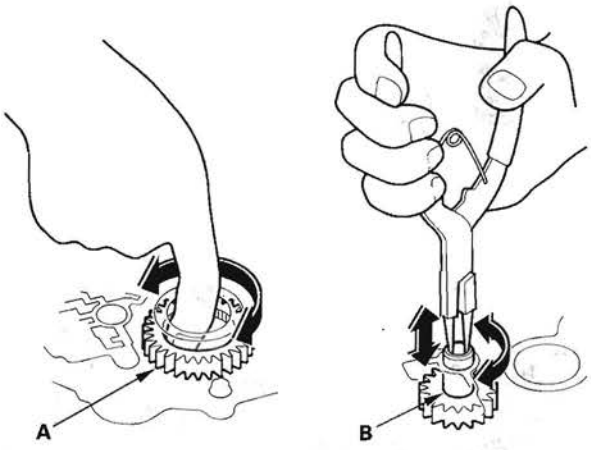

5. If the ATF pump drive gear and ATF pump driven gear shaft do not move smoothly, loosen the main valve body bolts. Realign the ATF pump driven gear shaft, and retighten the bolts to the specified torque, then recheck. Failure to align the ATF pump driven gear shaft correctly will result in a seized ATF pump drive gear or ATF pump driven gear shaft.

6. Make sure that the two check balls and the cooler check valve are in the main valve body, then install the cooler check valve spring in the cooler check valve.

7. Install the servo separator plate and two dowel pins on the main valve body.

8. Install the servo body (12 bolts). Install the ATF strainer with the two bolts in the bolt holes (A) in step 12, and install the baffle plate with the two bolts in the bolt holes (B) in step 2 in shaft assemblies and housing installation.

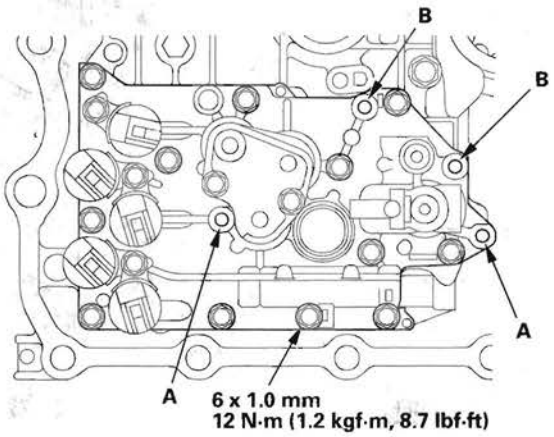

9. Install the regulator separator plate and two dowel pins on the main valve body.

10. Install the new O-ring on the stator shaft, and install the stator shaft and stator shaft stop.

11. Install the regulator valve body (eight bolts).

12. Install the new O-ring on the ATF strainer, and install the ATF strainer (two bolts).

13. Install the ATF joint pipes (one bolt).

14. Install the ATF feed pipes in the regulator valve body and servo body.

Shaft Assembly and Housing Installation

NOTE: The illustration shows the 4WD transmission; the 2WD does not have the transfer assembly.

1. Install the differential assembly in the torque converter housing.

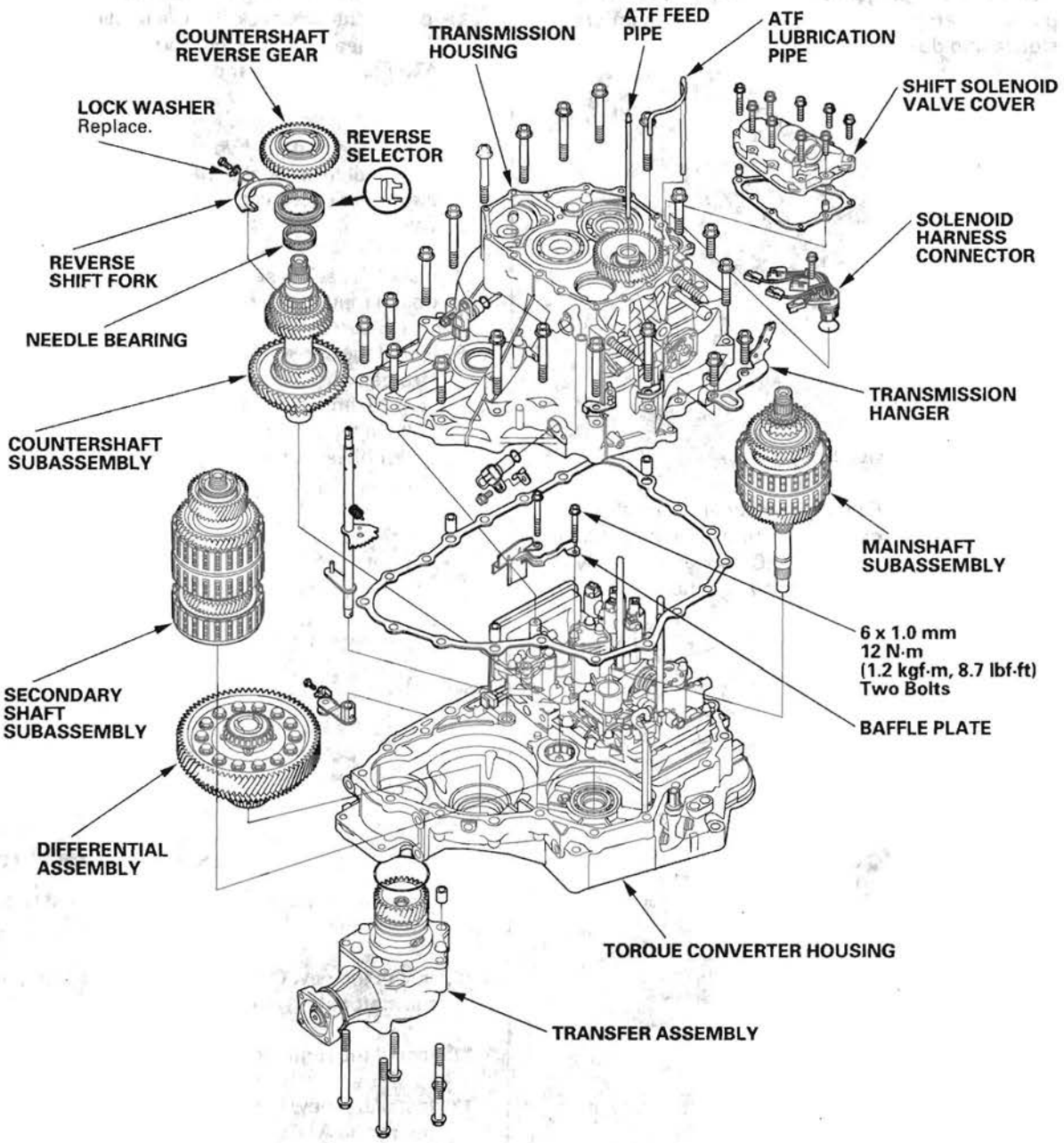

2. Install the baffle plate on the servo body.

3. Assemble the mainshaft, countershaft, and secondary shaft.

4. Join the mainshaft subassembly (A), countershaft subassembly (B), and secondary shaft subassembly (C) together, and install them in the torque converter housing. Do not bump the countershaft on the baffle plate (D).

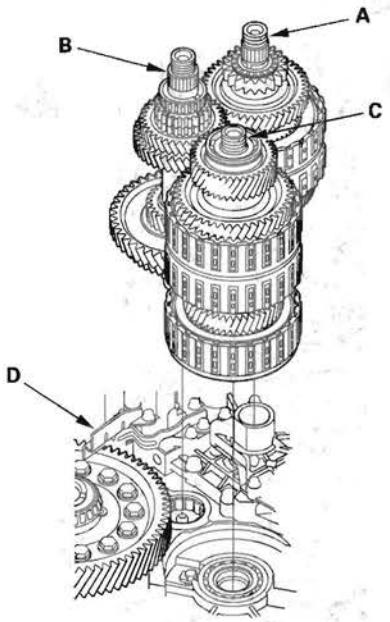

5. Make sure if the countershaft and differential are clear of the baffle plate.

6. If the detent arm was removed, install the detent arm (A) with arm collar (B) on the servo body (C), and install the new lock washer (D) by aligning its cutout (E) with the projection (F) of the servo body. Install and tighten the bolt, then bend the lock tab of the lock washer against the bolt head.

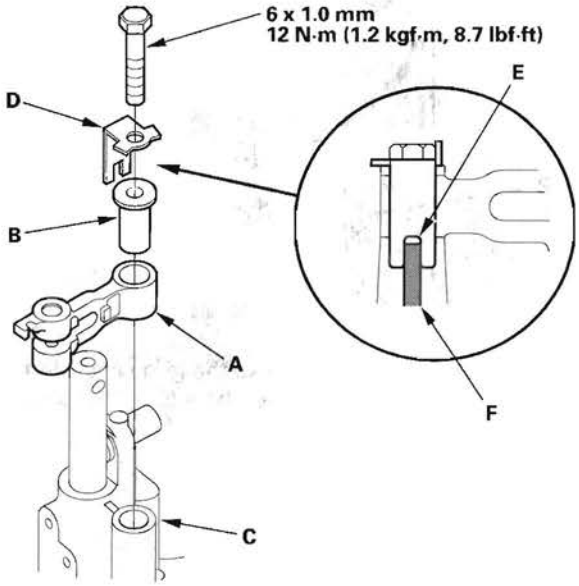

7. Install the control shaft (A) in the torque converter housing aligning the manual valve lever pin (B) on the control shaft with the guide of the manual valve (C). Pull the manual valve gently when aligning the manual valve with the control shaft.

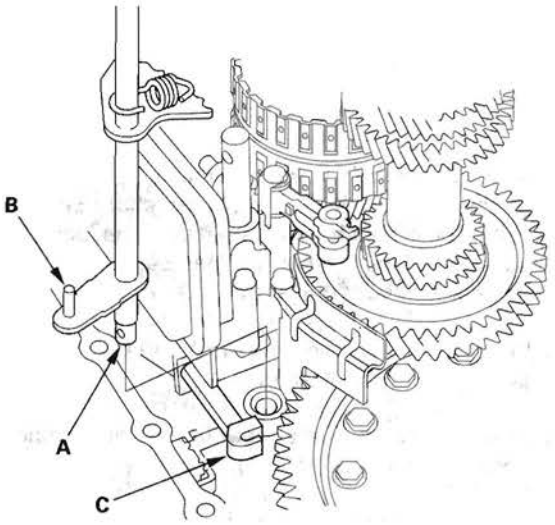

(cont'd)

Shaft Assembly and Housing Installation (cont'd)

8. Hook the detent arm spring (A) to the detent arm (B).

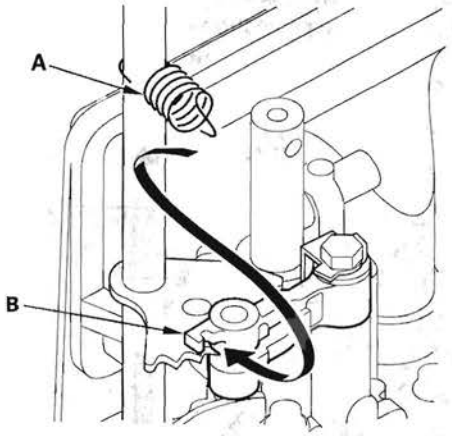

9. Turn the shift fork shaft (A) so the large chamfered hole (B) is facing the fork bolt hole (C) of the shift fork (D).

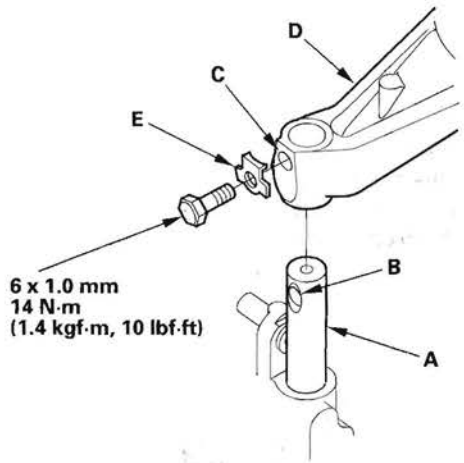

10. Install the shift fork and reverse selector together on the shift fork shaft and countershaft. Secure the shift fork to the shift fork shaft with the lock bolt and a new lock washer (E), then bend the lock tab of the lock washer against the bolt head.

11. Install the needle bearing and countershaft reverse gear on the countershaft.

12. Install the reverse idler gear in the transmission housing (see page 14-334).

13. Install the idler gear shaft (see page 14-360), if it was removed.

14. Install the three dowel pins (A) and a new gasket (B) on the torque converter housing (C).

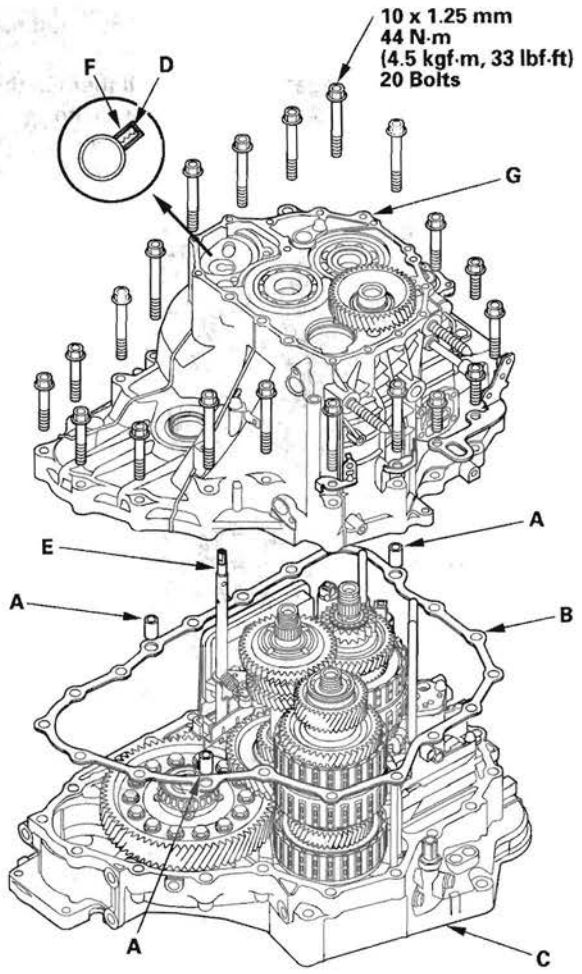

15. Align the spring pin (D) of the control shaft (E) with the transmission housing groove (F) by turning the control shaft. Do not squeeze the end of the control shaft tips together when turning the shaft. If the tips are squeezed together, it will cause a faulty shift position signal or position due to the play between the control shaft and the transmission range switch.

16. Place the transmission housing (G) on the torque converter housing. Do not install the input shaft (mainshaft) speed sensor and output shaft (countershaft) speed sensor before installing the transmission housing on the torque converter housing.

17. While expanding the snap ring of the secondary shaft bearing using the snap ring pliers, push the transmission housing down to start the secondary shaft bearing through the snap ring. Then release the pliers. While rotating the reverse idler gear with a screwdriver, push down the housing until it bottoms and snap ring snaps in place in the secondary shaft bearing snap ring groove.

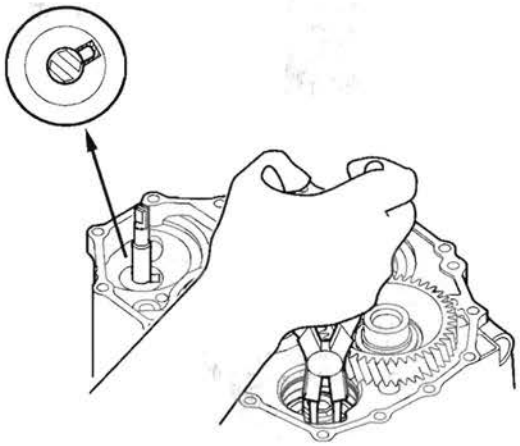

18. Verify that the secondary shaft bearing snap ring (A) is seated in the bearing and housing groove, and check that the ring end gap (B) is 0—7 mm (0—0.28 in.)

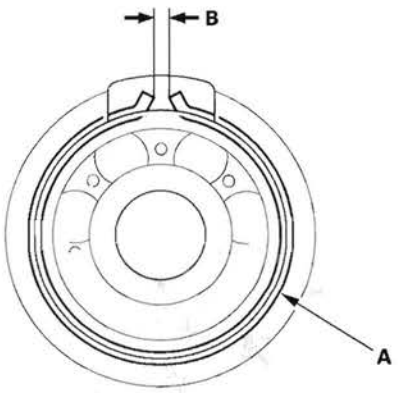

19. Install the transmission housing mounting bolts (20 bolts) along with the transmission hanger and harness clamp brackets. Tighten the mounting bolts to 44 N·m (4.5 kgf·m, 33 lbf·ft) in two or more steps in a crisscross pattern.

20. Install the new O-ring (A) on the input shaft (mainshaft) speed sensor (B), and install the input shaft (mainshaft) speed sensor in the transmission housing.

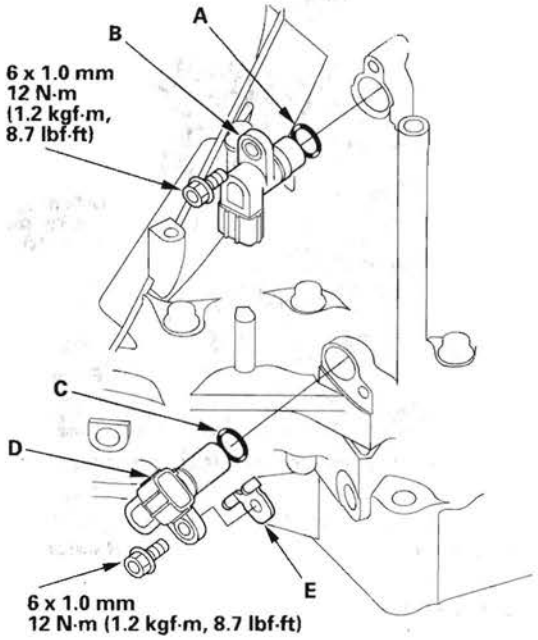

21. Install the new O-ring (C) on the output shaft (countershaft) speed sensor (D), and install the output shaft (countershaft) speed sensor and sensor washer (E).

(cont'd)

Shaft Assembly and Housing Installation (cont'd)

22. Install the new O-ring (F) on the shift solenoid harness connector (G), and install the shift solenoid harness connector in the transmission housing.

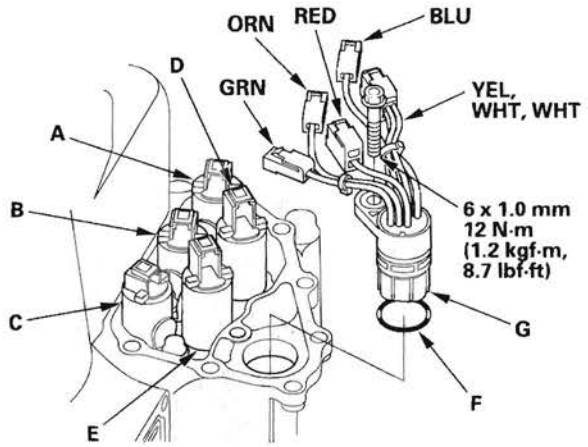

23. Connect the harness terminals to the solenoids:

- RED wire connector to shift solenoid valve E.
- GRN wire connector to shift solenoid valve C.
- ORN wire connector to shift solenoid valve B.
- BLU wire connector to shift solenoid valve A.
- YEL, WHT, WHT wire connector to shift solenoid valve D.

24. Install the new gasket (A), dowel pins (B), and shift solenoid valve cover (C), and secure the cover with the bolts.

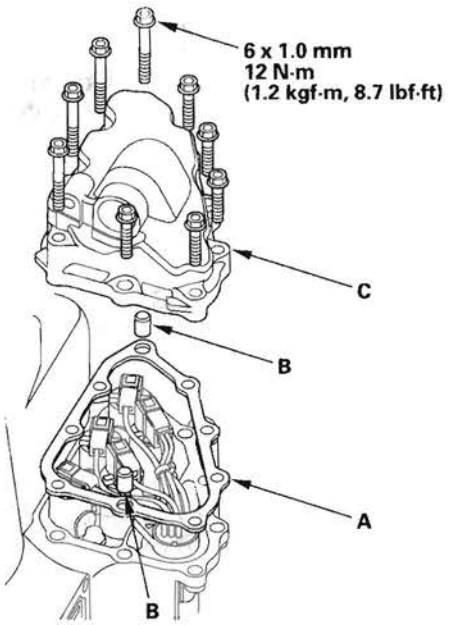

End Cover Installation

Special Tool Required
Mainshaft holder 07GAB-PF50101 or 07GAB-PF50100

1. Install the mainshaft holder onto the mainshaft.

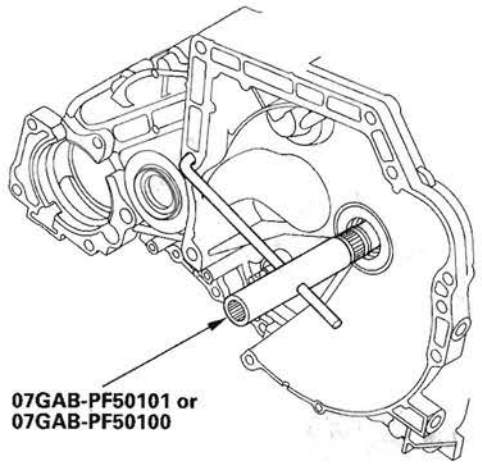

2. Lubricate the following parts with ATF:
   - Splines and threads of the mainshaft.
   - Splines of the mainshaft idler gear.
   - Old conical spring washer and old locknut.

3. Install the mainshaft idler gear (A), old conical spring washer (B), and old locknut (C) on the mainshaft (D), and tighten the locknut to 226 N·m (23.0 kgf·m, 166 lbf·ft).

   NOTE:
   - Do not tap the idler gear to install.
   - Use a torque wrench to tighten the locknut. Do not use an impact wrench.

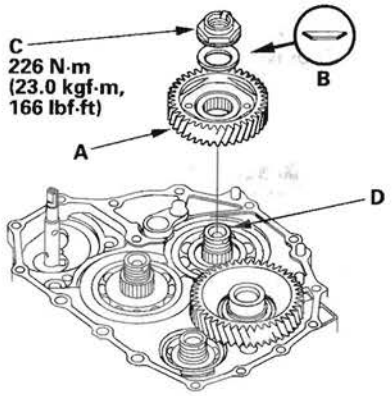

4. Install the park lever (A) and park lever stop (B) on the selector control shaft (C), then install the lock bolt with the new lock washer (D). Do not bend the lock tab of the lock washer until step 18.

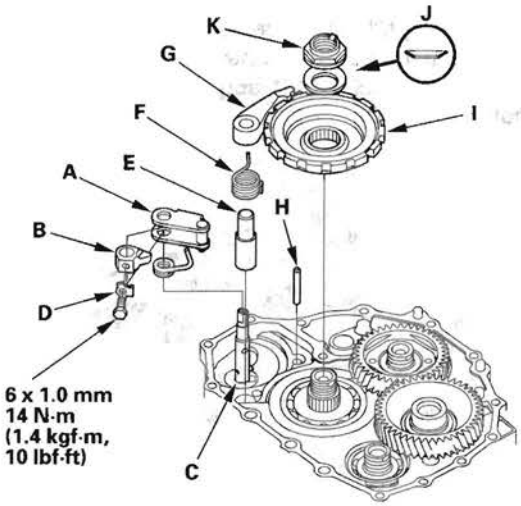

5. Install the park pawl shaft (E), park pawl spring (F), park pawl (G), and stop shaft (H) on the transmission housing.

6. Lubricate the following parts with ATF:
   - Threads and splines of the countershaft.
   - Old conical spring washer and old locknut.
   - Areas where the park gear contacts the conical spring washer.

7. Install the park gear (I), old conical spring washer (J), and old locknut (K) on the countershaft.

8. Lift the park pawl up, and engage it with the park gear, then tighten the locknut to 226 N·m (23.0 kgf·m, 166 lbf·ft).

   NOTE:
   - Do not tap the park gear to install.
   - Use a torque wrench to tighten the locknut. Do not use an impact wrench.
   - Countershaft locknut has left-hand threads.

9. Remove the locknuts and conical spring washers from the mainshaft and countershaft.

(cont'd)

End Cover Installation (cont'd)

10. Lubricate the threads of the shafts, the new locknuts and the new conical spring washers with ATF.

11. Install the new conical spring washers (A) with facing stamped mark side up in the direction shown, and install the new mainshaft locknut (B), the new countershaft locknut (C), and the new secondary shaft locknut (D).

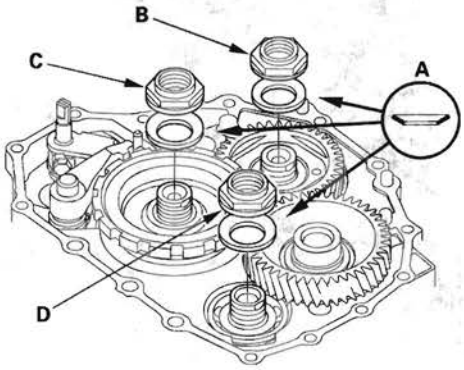

12. Tighten the locknuts to 167 N·m (17.0 kgf·m, 123 lbf·ft).

    NOTE:
    - Be sure to install the conical spring washers in the direction shown.
    - Use a torque wrench to tighten the locknut. Do not use an impact wrench.
    - Countershaft and secondary shaft locknuts have left-hand threads.

13. Remove the special tool from the mainshaft.

14. Stake the locknuts into the shafts in depth (A) of 0.7—1.3 mm (0.03—0.05 in.) using a 3.5 mm punch (B).

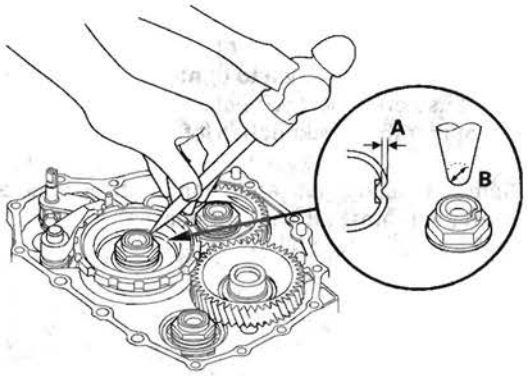

15. Install the selector control level (A) on the selector control shaft (B), and install the bolt with the new lock washer (C), then bend the lock tab of the lock washer against the bolt head.

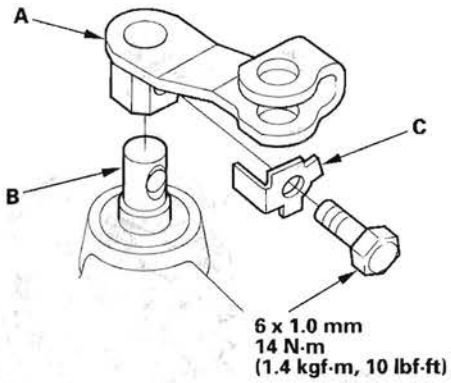

16. Set the park lever in the P position, then verify that the park pawl (A) engages the park gear (B).

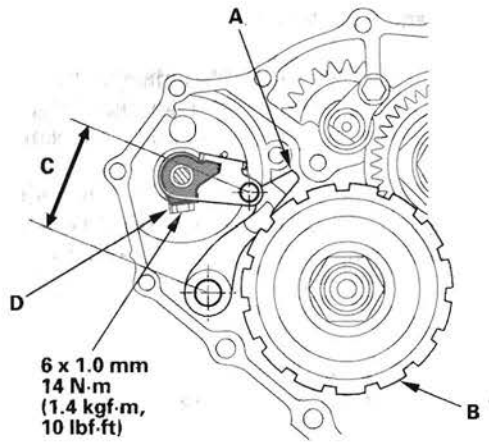

17. If the park pawl does not engage fully, check the distance (C) between the pawl shaft and the park lever roller pin (see page 14-327).

18. Tighten the lock bolt, and bend the lock tab of the lock washer (D) against the bolt head.

19. Install the ATF feed pipe (A) into the idler gear shaft, and install the ATF lubrication pipe (B) into the transmission housing.

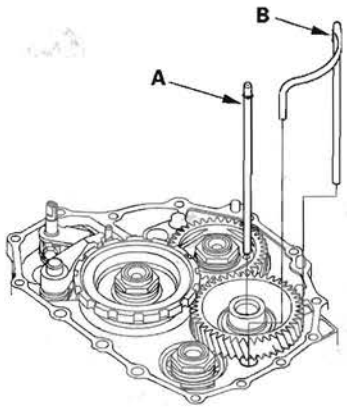

20. Install the new gasket (A) on the transmission housing, and install the two dowel pins (B) and new O-rings (C) over the top of the ATF feed pipes.

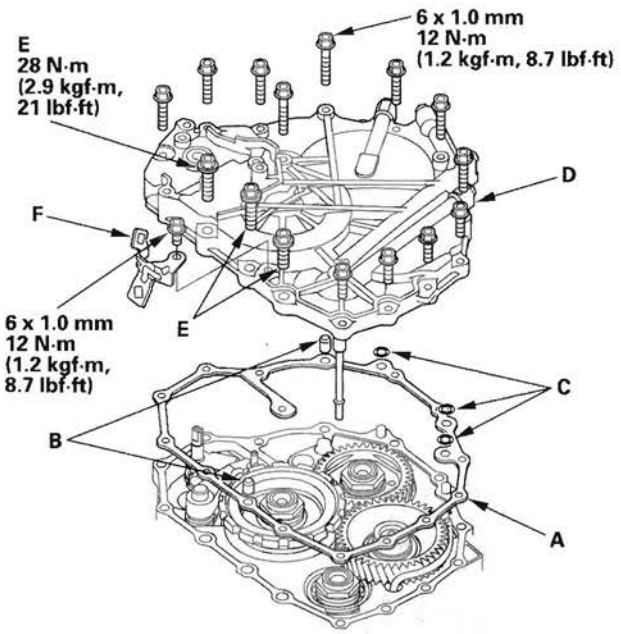

21. Install the end cover (D), and tighten the three special bolts (E) and the 6 x 1.0 mm bolts (12 bolts).

22. Install the harness clamp bracket (F) on the end cover.

23. Set the selector control shaft (A) to the N position by turning the selector control lever on the torque converter side.

NOTE: Do not squeeze the end of the selector control shaft tips together when turning the shaft. If the tips are squeezed together it will cause a faulty shift position signal or position due to the play between the selector control shaft and the transmission range switch.

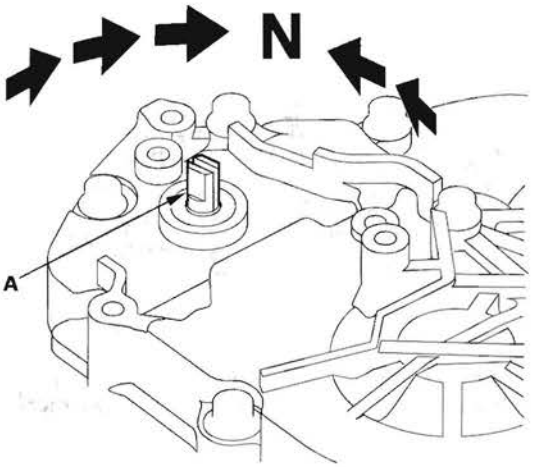

24. Align the cutouts (A) on the control shaft with the neutral positioning cutouts (B) on the transmission range switch (C), then put a 2.0 mm (0.08 in.) feeler gauge blade (D) in the cutouts to hold in the N position.

NOTE: Be sure to use a 2.0 mm (0.08 in.) blade or equivalent to hold the switch in the N position.

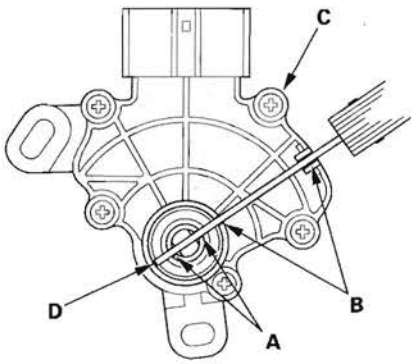

(cont'd)

End Cover Installation (cont'd)

25. Install the transmission range switch (A) gently on the selector control shaft (B) while holding it in the N position with the 2.0 mm (0.08 in.) blade (C).

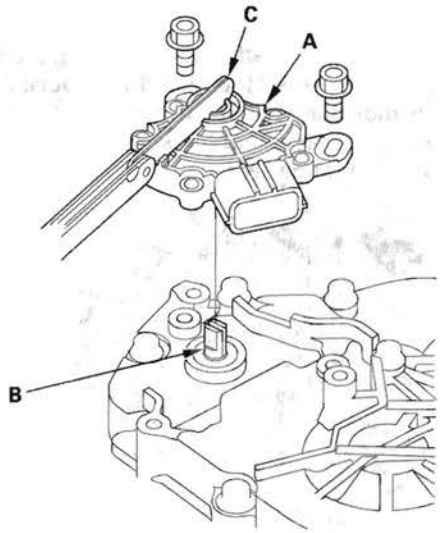

26. Tighten the bolts on the transmission range switch while you continue to hold it in the N position. Do not move the transmission range switch when tightening the bolts. Remove the feeler gauge.

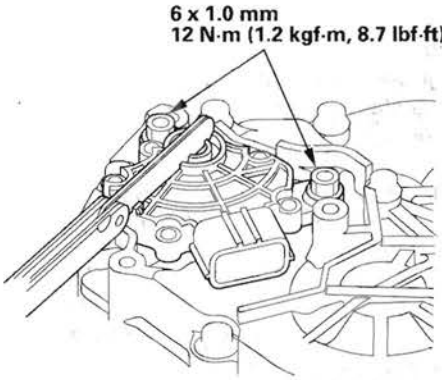

27. Connect the transmission range switch connector (A) securely, then install the harness clamps (B) on the clamp bracket (C).

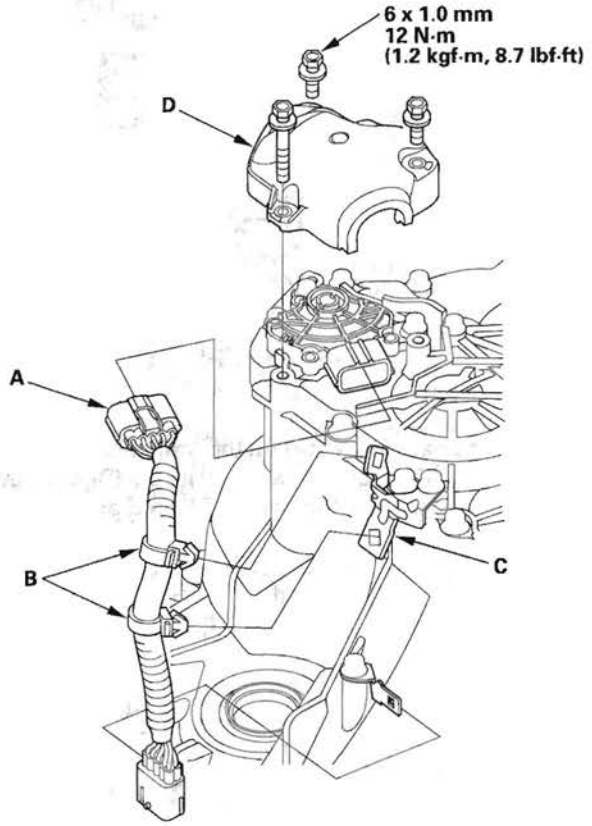

28. Install the transmission range switch cover (D).

29. Install the new gasket (B) on the transmission housing, and install the ATF pipe (C) and the ATF joint pipes (D).

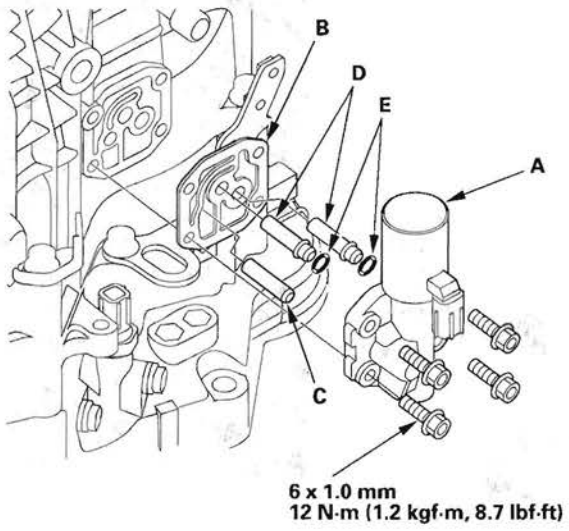

30. Install the new O-rings (E) over the ATF joint pipes, and install A/T clutch pressure control solenoid valve A.

31. Install the new gasket (A) and the ATF joint pipes (D) on the transmission housing, and install the new O-rings (E) over the ATF joint pipes.

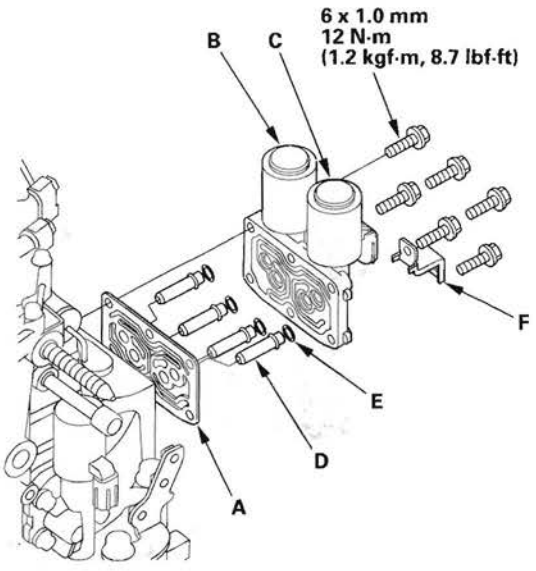

32. Install A/T clutch pressure control solenoid valve B and C, and the harness clamp bracket (F).

33. Install the new O-ring (A) on the dipstick guide tube (B), then install the dipstick guide tube.

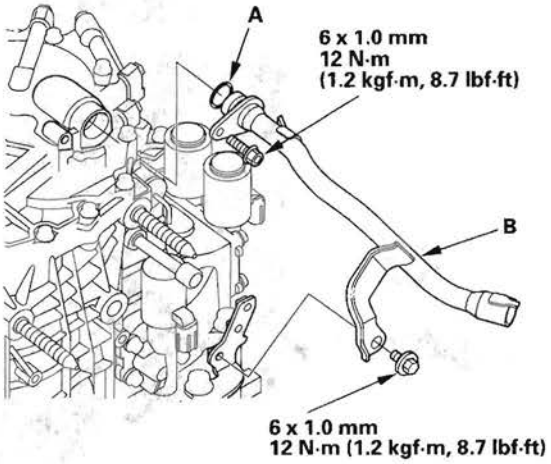

34. Install the ATF cooler inlet line (A) with the line bolt (B) and new sealing washers (C), and secure the inlet line with the bolts (D) on the transmission.

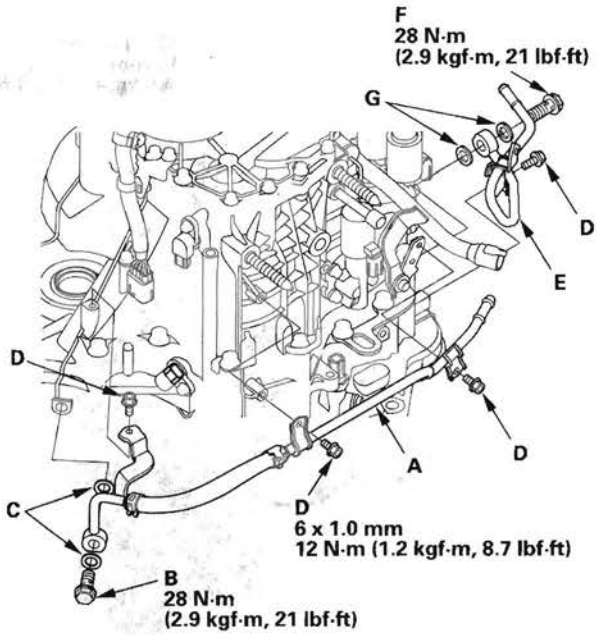

35. Install the ATF cooler outlet line (E) with the line bolt (F) and new sealing washers (G), and secure the outlet line with the bolt on the transmission.

(cont'd)

End Cover Installation (cont'd)

36. Install the breather cap (A) on the breather pipe (B).

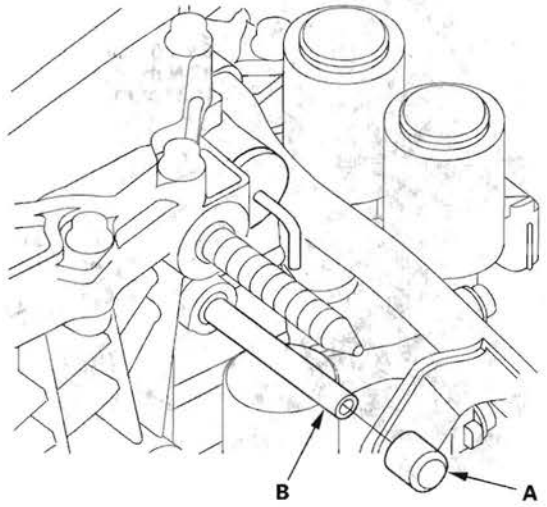

37. 4WD model: Install the transfer assembly (A) with the new O-ring (B) and dowel pin (C).

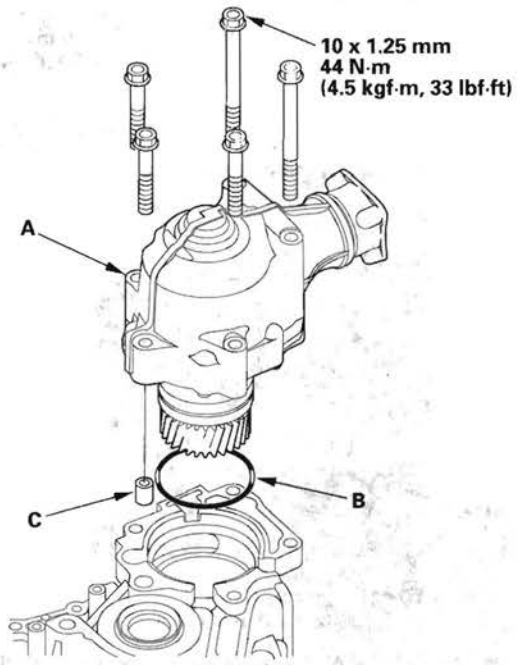

Component Location Index

4WD

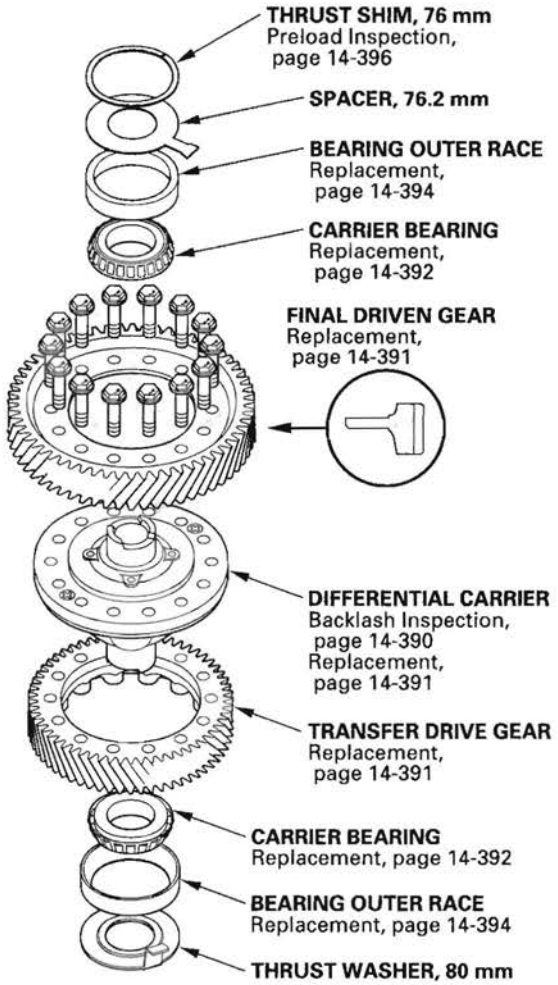

2WD

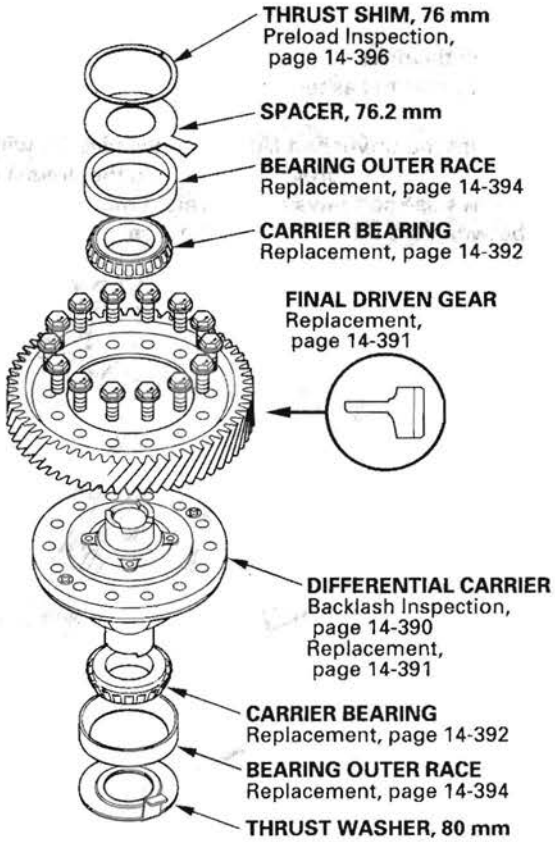

Backlash Inspection

NOTE: The illustration shows the 4WD model; 2WD is similar.

1. Install the drive shaft and intermediate shaft into the differential assembly.
2. Secure the driveshaft (A) in a bench vise (B) with soft jaws (C). To prevent damage to the driveshaft, always use soft jaws or equivalent material between the driveshaft and the vise.

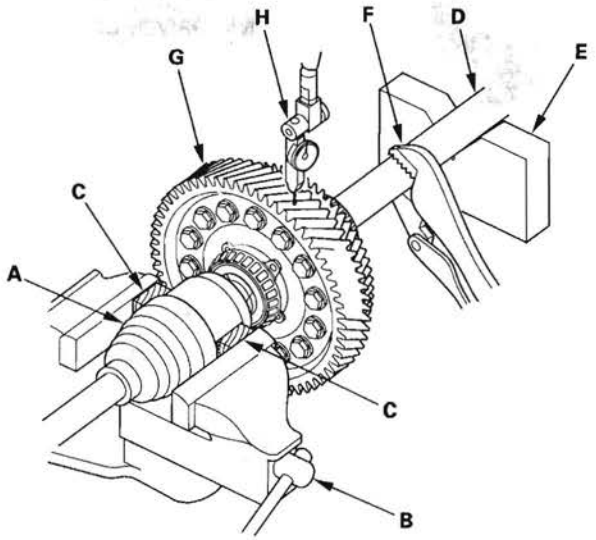

3. Place the intermediate shaft (D) on a V-block (E), then fix the intermediate shaft using a grip (F) or equivalent.
4. Measure the backlash of the final driven gear (G) with a dial indicator (H).

   Standard: 0.4—1.3 mm (0.016—0.051 in.)

5. If the backlash is out of standard, replace the differential carrier; 4WD (see page 14-391), 2WD (see page 14-391).

Differential Carrier, Final Driven Gear, and Transfer Drive Gear Replacement

4WD

1. Remove the final driven gear (A) and transfer drive gear (B) from the differential carrier (C).

   NOTE: The final driven gear bolts have left-hand threads.

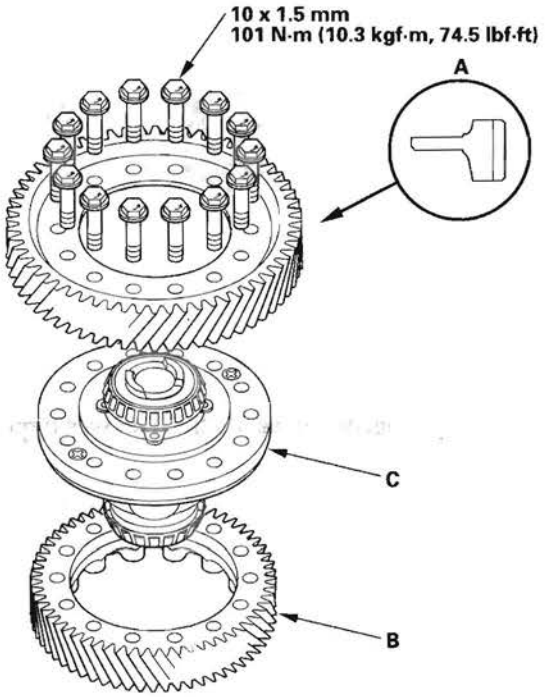

2. Install the final driven gear and transfer drive gear on the differential carrier in the direction shown.

3. Secure the final drive gear, differential carrier, and transfer drive gear with the bolts. Tighten the bolts to the specified torque in a crisscross pattern in two or more steps.

Differential Carrier, Final Driven Gear Replacement

2WD

1. Remove the final driven gear (A) from the differential carrier (B).

   NOTE: The final driven gear bolts have left-hand threads.

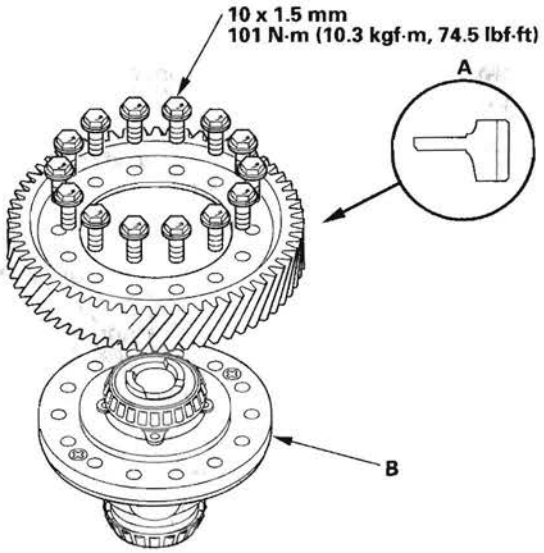

2. Install the final driven gear on the differential carrier in the direction shown.

3. Secure the final drive gear and differential carrier with the bolts. Tighten the bolts to the specified torque in a crisscross pattern in two or more steps.

Carrier Bearing Replacement

Special Tools Required
Attachment, 40 x 50 mm 07LAD-PW50601

NOTE:
- The bearing and bearing outer race should be replaced as a set.
- Inspect and adjust the carrier bearing preload whenever bearing is replaced.
- Check the bearing for wear and rough movement. If the bearing is OK, removal is not necessary.
- The illustration shows the 4WD model; 2WD is similar.

1. Remove the final driven gear from the differential carrier.

   NOTE: Final driven gear removal is no needed when the carrier bearing on opposite side of the final driven gear.

2. Place a step adapter (A) on the differential carrier (B), and set a commercially available puller (C) and bearing separator (D) under the carrier bearing (E), then remove the carrier bearing.

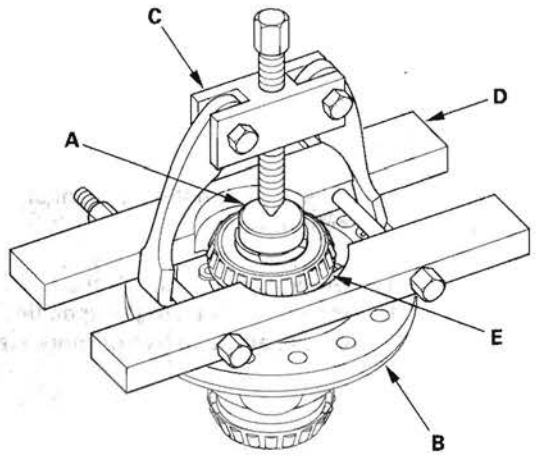

3. Install the new carrier bearing using the attachment (40 x 50 mm) and a press. Press the bearing on securely until it bottoms so there is no clearance between the bearing and the differential carrier.

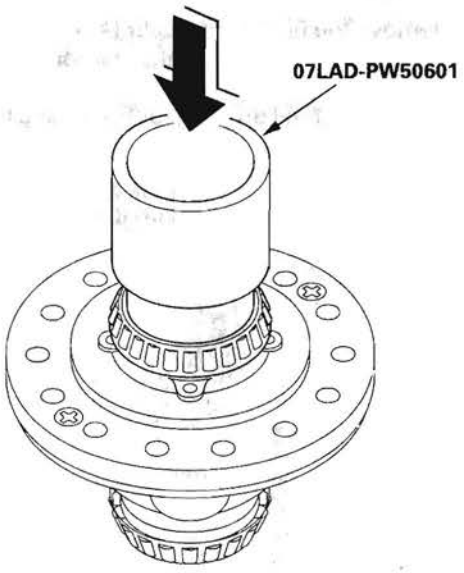

4. Install the final driven gear if the gear was removed.

Oil Seal Replacement

Special Tools Required
- Driver 07749-0010000
- Oil seal driver attachment 07947-SD90101
- Oil seal driver attachment 07JAD-PH80101

1. Remove the oil seal from the transmission housing.

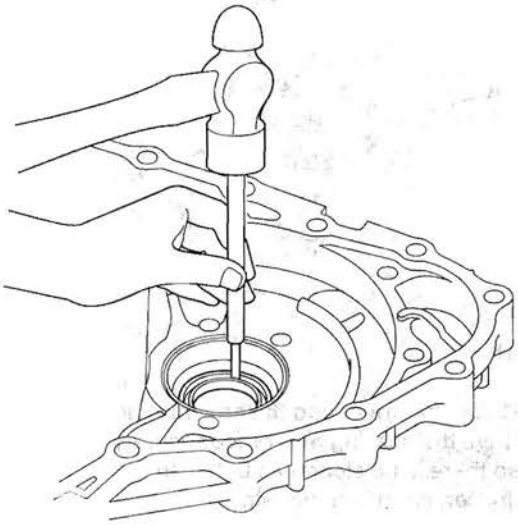

2. Remove the oil seal from the torque converter housing.

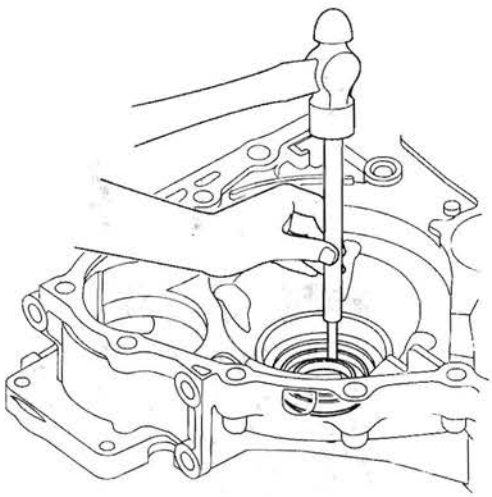

3. Install the new oil seal flush with the transmission housing using the driver and the oil seal driver attachment.

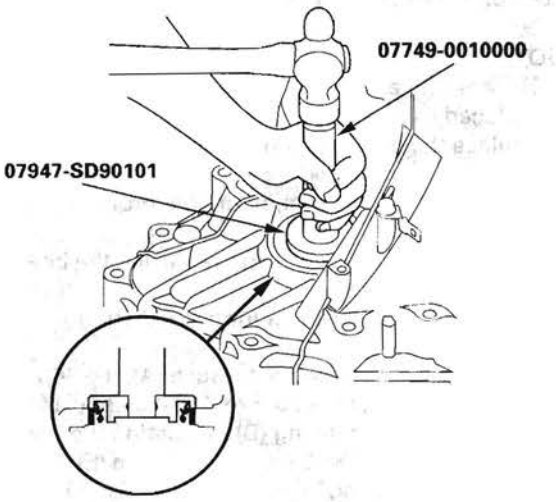

4. Install the new oil seal flush with the torque converter housing using the driver and the oil seal driver attachment.

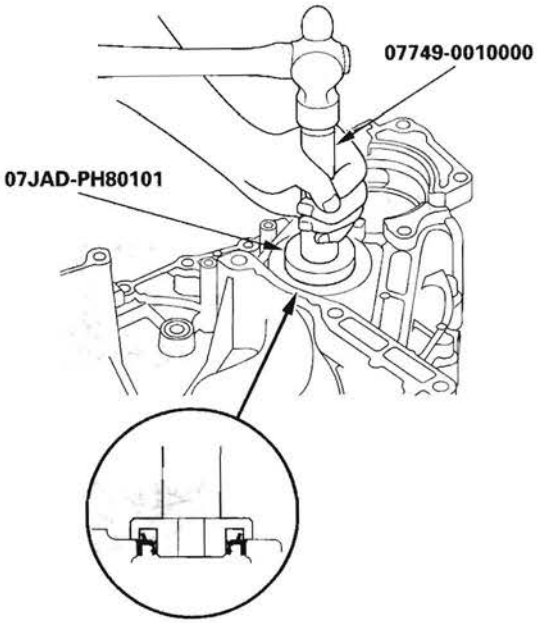

Carrier Bearing Outer Race Replacement

Special Tools Required
- Attachment, 78 x 80 mm 07NAD-PX40100
- Attachment, 72 x 75 mm 07746-0010600
- Driver 07749-0010000

NOTE:
- The bearing and the bearing outer race should be replaced as a set.
- Replace the bearing with a new one whenever the outer race is replaced.
- Do not use the thrust shim on the torque converter housing.
- Adjust bearing preload after replacing the bearing and outer race.
- Coat all parts with ATF during installation.

1. Remove the bearing outer race (A), the 76.2 mm spacer (B), and the 76 mm thrust shim (C) from the transmission housing (D) by heating the housing to about 212 °F (100 °C) with a heat gun (E). Do not heat the housing in excess of 212 °F (100 °C).

   NOTE: Let the transmission housing cool to room temperature before installing the bearing outer race.

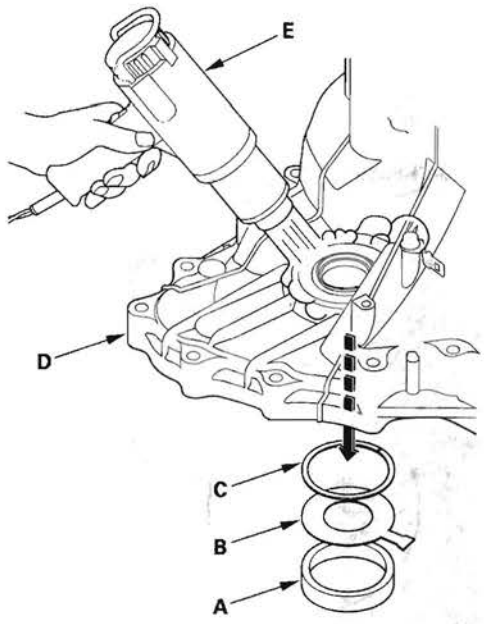

2. Install the 76 mm thrust shim (A), 76.2 mm spacer (B), and the new bearing outer race (C) in the transmission housing (D).

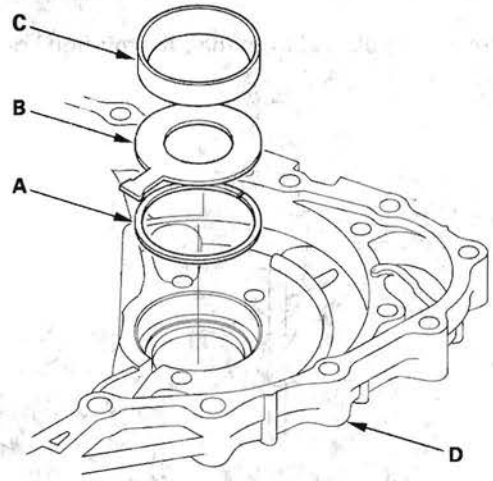

3. Using the driver and the attachment (78 x 80 mm), drive the bearing outer race securely in the housing so there is no clearance between the outer race, spacer, shim, and housing.

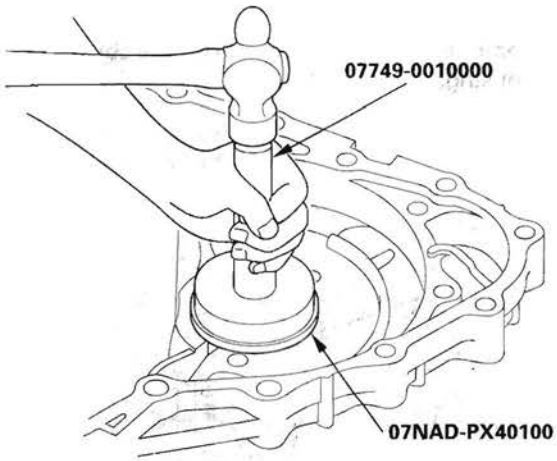

4. Remove the bearing outer race (A) and 80 mm thrust washer (B) from the torque converter housing (C).

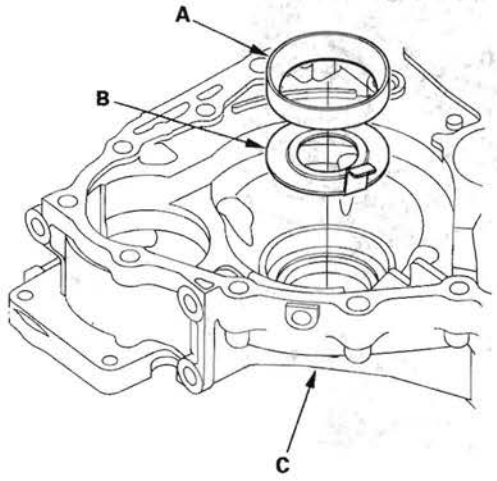

5. Install the 80 mm thrust washer and the new bearing outer race in the torque converter housing.

6. Drive the bearing outer race securely in the housing using the driver and the attachment (72 x 75 mm).

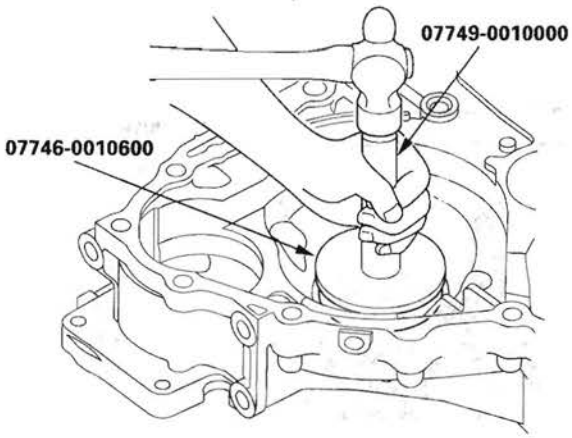

Carrier Bearing Preload Inspection

Special Tools Required
- Attachment, 78 x 80 mm 07NAD-PX40100
- Preload inspection tool 070AJ-0020101
- Attachment, 72 x 75 mm 07746-0010600
- Driver 07749-0010000

NOTE:
- If the transmission housing, torque converter housing, differential carrier, carrier bearing and the outer race, or thrust shim were replaced, the bearing preload must be adjusted.
- Replace the bearing with a new one whenever the outer race is replaced.
- Do not use the thrust shim on the torque converter housing.
- Coat all parts with ATF during installation.

1. Remove the bearing outer race (A), the 76.2 mm spacer (B), and the 76 mm thrust shim (C) from the transmission housing (D) by heating the housing to about 212 °F (100 °C) with a heat gun (E). Do not heat the housing in excess of 212 °F (100 °C).

   NOTE: Let the transmission housing cool to room temperature before adjusting the bearing preload.

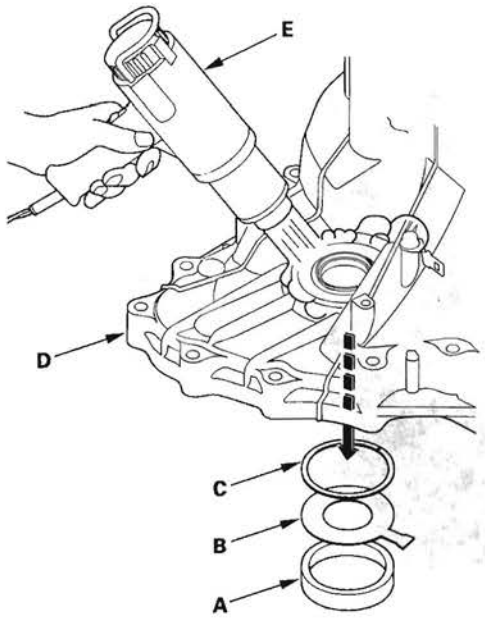

2. Install the 76 mm thrust shim (A) in the transmission housing (B). If you replace the 76 mm thrust shim with a new one, use the same thickness shim as the old one.

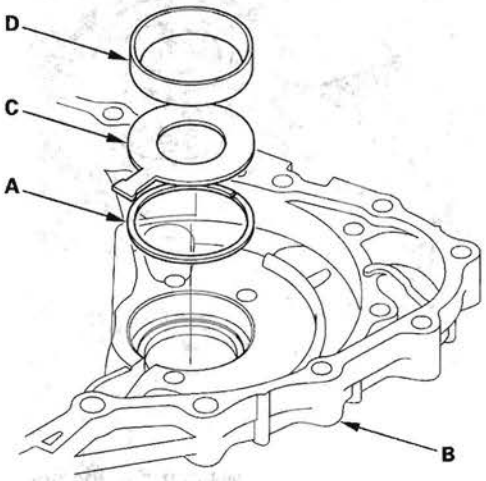

3. Install the 76.2 mm spacer (C) and the bearing outer race (D) in the transmission housing.

4. Drive the bearing outer race securely in the housing using the driver and the attachment (78 x 80 mm) so there is no clearance between the outer race, spacer, shim, and housing.

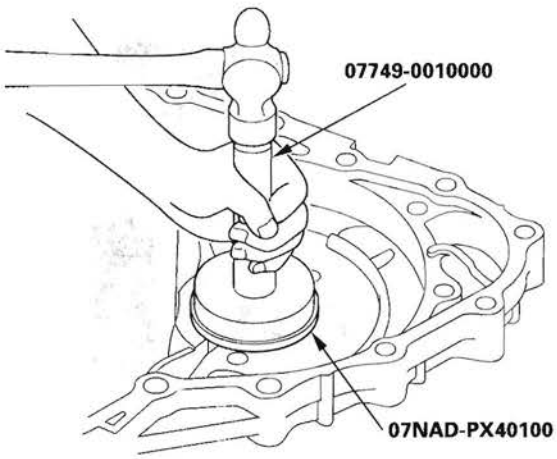

5. Install the differential assembly (A) in the torque converter housing (B).

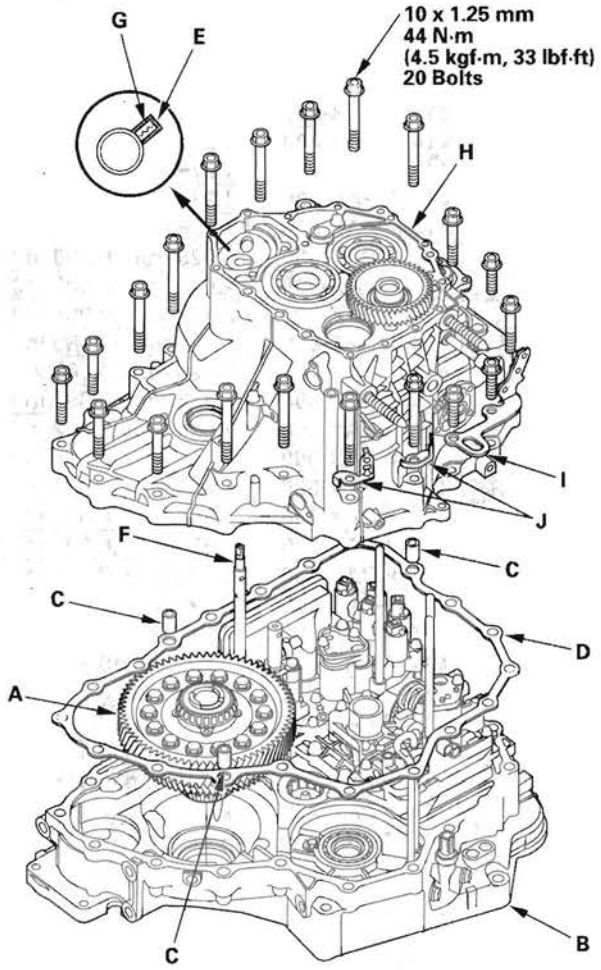

6. Install the three dowel pins (C) and a new gasket (D) on the torque converter housing.

7. Align the spring pin (E) of the control shaft (F) with the transmission housing groove (G) by turning the control shaft. Do not squeeze the end of the control shaft tips together when turning the shaft.

8. Place the transmission housing (H) on the torque converter housing.

9. Install the transmission housing mounting bolts (20 bolts) along with the transmission hanger (I) and harness clamp brackets (J). Tighten the mounting bolts to 44 N·m (4.5 kgf·m, 33 lbf·ft) in two or more steps in a crisscross pattern.

10. Rotate the differential assembly in both directions to seat the bearings.

11. Measure the starting torque of the differential assembly with the special tool, a torque wrench (A), and a socket (B). Measure the starting torque at normal room temperature in both directions.

Standard
New Bearing:
2.7—3.9 N·m (28—40 kgf·cm, 24—35 lbf·in.)
Reused Bearing:
2.5—3.6 N·m (25—37 kgf·cm, 22—32 lbf·in.)

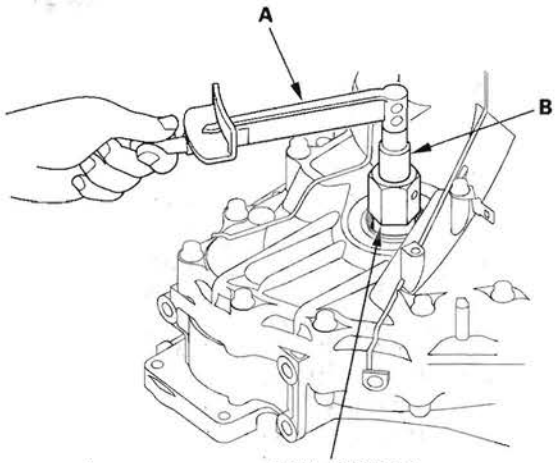

070AJ-0020101

(cont'd)

Carrier Bearing Preload Inspection (cont'd)

12. If the measurement is out of standard, remove the thrust shim and select the thrust shim from table below. Install the new thrust shim and recheck. To increase the starting torque, increase the thickness of the thrust shim. To decrease the starting torque, decrease the thickness of the shim. Changing the shim to the next size will increase or decrease starting torque about 0.3—0.4 N·m (3—4 kgf·cm, 2—3 lbf·in.).

THRUST SHIM, 76 mm

No.	Part Number	Thickness
S	41438-PX4-700	2.05 mm (0.080 in.)
T	41439-PX4-700	2.10 mm (0.082 in.)
U	41440-PX4-700	2.15 mm (0.084 in.)
A	41441-PK4-000	2.20 mm (0.086 in.)
B	41442-PK4-000	2.25 mm (0.088 in.)
C	41443-PK4-000	2.30 mm (0.090 in.)
D	41444-PK4-000	2.35 mm (0.092 in.)
E	41445-PK4-000	2.40 mm (0.094 in.)
F	41446-PK4-000	2.45 mm (0.096 in.)
G	41447-PK4-000	2.50 mm (0.098 in.)
H	41448-PK4-000	2.55 mm (0.099 in.)
I	41449-PK4-000	2.60 mm (0.101 in.)
J	41450-PK4-000	2.65 mm (0.103 in.)
K	41451-PK4-000	2.70 mm (0.105 in.)
L	41452-PK4-000	2.75 mm (0.107 in.)
M	41453-PK4-000	2.80 mm (0.109 in.)
N	41454-PK4-000	2.85 mm (0.111 in.)
O	41455-PK4-000	2.90 mm (0.113 in.)
P	41456-PK4-000	2.95 mm (0.115 in.)
Q	41457-PK4-000	3.00 mm (0.117 in.)
R	41458-PK4-000	3.05 mm (0.119 in.)
0A	41428-PRP-000	1.55 mm (0.061 in.)
0B	41429-PRP-000	1.60 mm (0.063 in.)
0C	41430-PRP-000	1.65 mm (0.065 in.)
0D	41431-PRP-000	1.70 mm (0.067 in.)
0E	41432-PRP-000	1.75 mm (0.069 in.)
0F	41433-PRP-000	1.80 mm (0.071 in.)
0G	41434-PRP-000	1.85 mm (0.073 in.)
0H	41435-PRP-000	1.90 mm (0.075 in.)
0I	41436-PRP-000	1.95 mm (0.077 in.)
0J	41437-PRP-000	2.00 mm (0.079 in.)

(cont'd)

THRUST SHIM, 76 mm (cont'd)

No.	Part Number	Thickness
A	41428-PAX-000	1.575 mm (0.062 in.)
B	41429-PAX-000	1.625 mm (0.064 in.)
C	41430-PAX-000	1.675 mm (0.066 in.)
D	41431-PAX-000	1.725 mm (0.068 in.)
E	41432-PAX-000	1.775 mm (0.070 in.)
F	41433-PAX-000	1.825 mm (0.072 in.)
G	41434-PAX-000	1.875 mm (0.074 in.)
H	41435-PAX-000	1.925 mm (0.076 in.)
I	41436-PAX-000	1.975 mm (0.078 in.)
J	41437-PAX-000	2.025 mm (0.080 in.)
K	41438-PAX-000	2.075 mm (0.082 in.)
L	41439-PAX-000	2.125 mm (0.084 in.)
M	41440-PAX-000	2.175 mm (0.086 in.)
N	41441-PAX-000	2.225 mm (0.088 in.)
O	41442-PAX-000	2.275 mm (0.090 in.)
P	41443-PAX-000	2.325 mm (0.092 in.)
Q	41444-PAX-000	2.375 mm (0.094 in.)
R	41445-PAX-000	2.425 mm (0.095 in.)
S	41446-PAX-000	2.475 mm (0.097 in.)
T	41447-PAX-000	2.525 mm (0.099 in.)
U	41448-PAX-000	2.575 mm (0.101 in.)
V	41449-PAX-000	2.625 mm (0.103 in.)
W	41450-PAX-000	2.675 mm (0.105 in.)
X	41451-PAX-000	2.725 mm (0.107 in.)
Y	41452-PAX-000	2.775 mm (0.109 in.)
Z	41453-PAX-000	2.825 mm (0.111 in.)
0A	41454-PAX-000	2.875 mm (0.113 in.)
0B	41455-PAX-000	2.925 mm (0.115 in.)
0C	41456-PAX-000	2.975 mm (0.117 in.)
0D	41457-PAX-000	3.025 mm (0.119 in.)

Inspection

1. Set the dial indicator (A) on the companion flange (B).

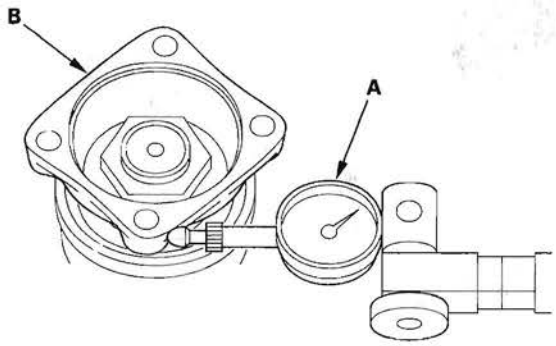

2. Measure the transfer gear backlash.

   Standard: 0.06—0.16 mm (0.02—0.06 in.)

3. Secure the transfer housing (A) in a bench vise (B) with soft jaws. To prevent damage to the transfer housing, always use soft jaws or equivalent materials between the transfer housing and the vise.

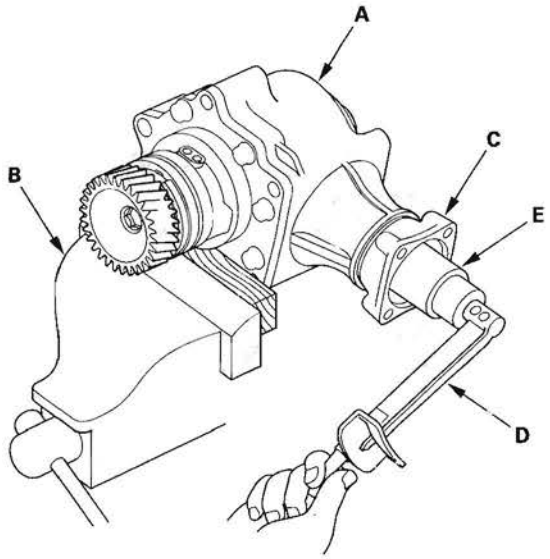

4. Rotate the companion flange several times to seat the tapered roller bearings.

5. Measure the starting torque at the companion flange (C) with a torque wrench (D) and a socket (E).

   Standard: 2.44—3.87 N·m
   (24.8—39.4 kgf·cm, 21.5—34.1 lbf·in.)

6. Remove the transfer assembly from the vise.

(cont'd)

Inspection (cont'd)

7. Remove the transfer holder (A) from the transfer housing (B), then remove the O-ring (C) from the transfer holder.

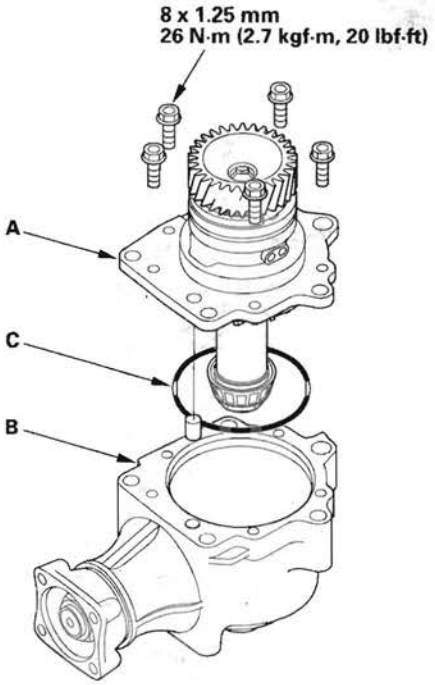

8. Apply Prussian Blue to both side of the transfer drive gear teeth lightly and evenly.

9. Install the transfer holder, and tighten the bolts. Do not install the O-ring on the transfer holder.

10. Rotate the companion flange in both directions until the transfer gears rotate one full turn in both directions.

11. Remove the transfer holder, and check the transfer drive gear tooth contact pattern. The pattern should be centered on the gear teeth as shown.

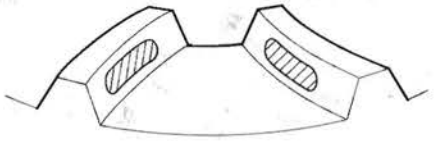

12. If the measurements are out of standard or the tooth contact pattern are incorrect, disassemble the transfer assembly and repair.

Disassembly

Exploded View

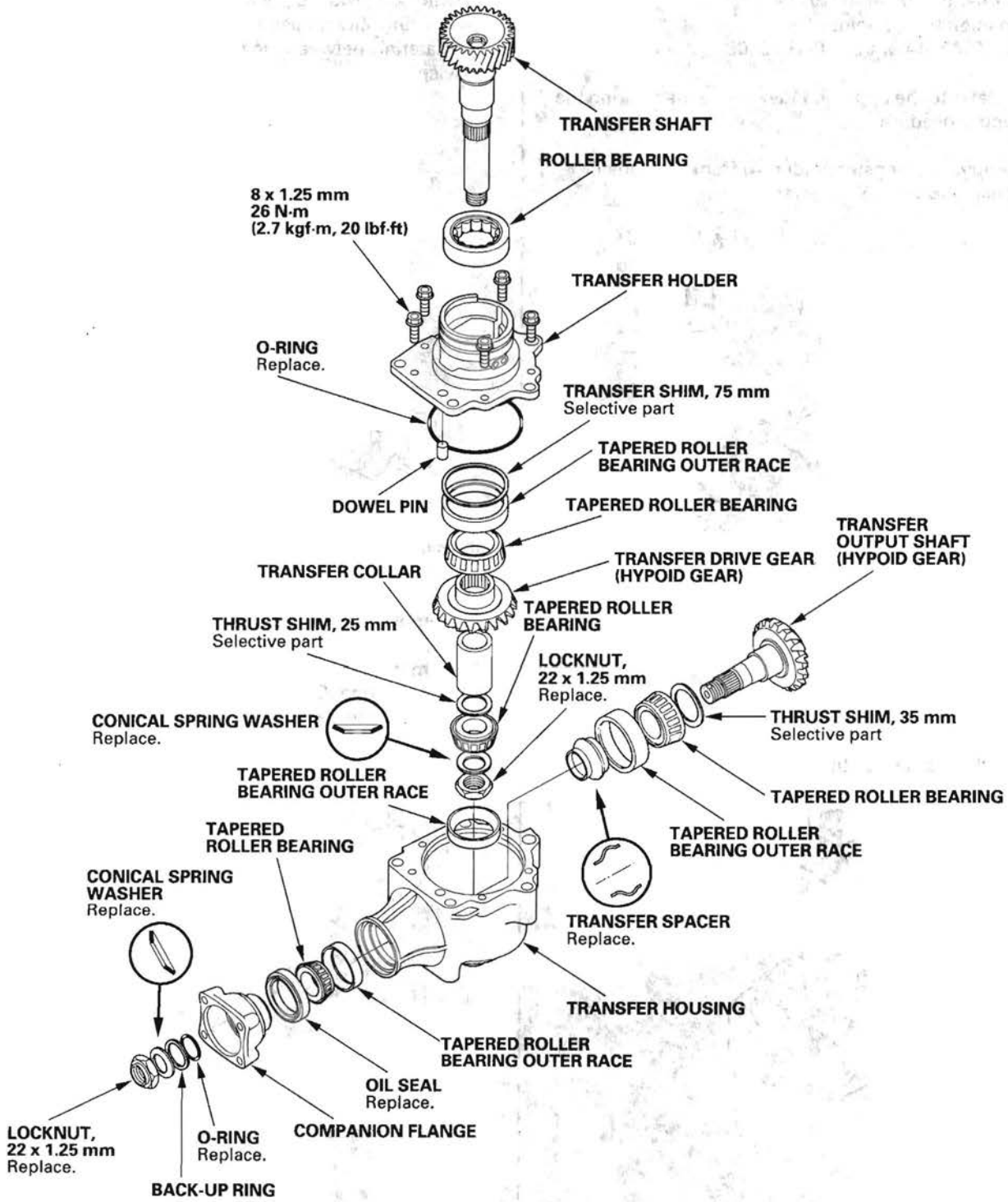

(cont'd)

Disassembly (cont'd)

Special Tools Required
- Holder handle 07JAB-001020A
- Companion flange holder 07RAB-TB4010A or 07RAB-TB4010B

NOTE: Refer to the Exploded View as needed during the following procedure.

1. Remove the transfer holder (A) from the transfer housing (B).

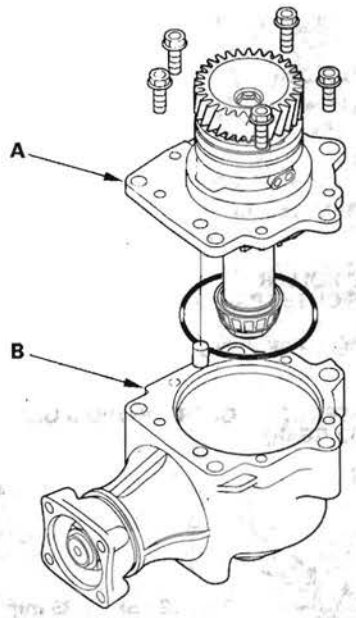

2. Cut the lock tab on the locknut using a chisel.

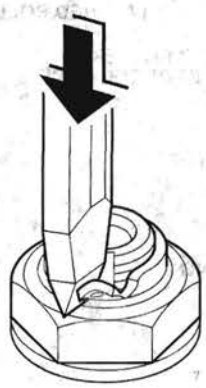

3. Secure the transfer housing (A) in a bench vise (B) with soft jaws. To prevent damage to the transfer housing, always use soft jaws or equivalent materials between the transfer housing and the vise.

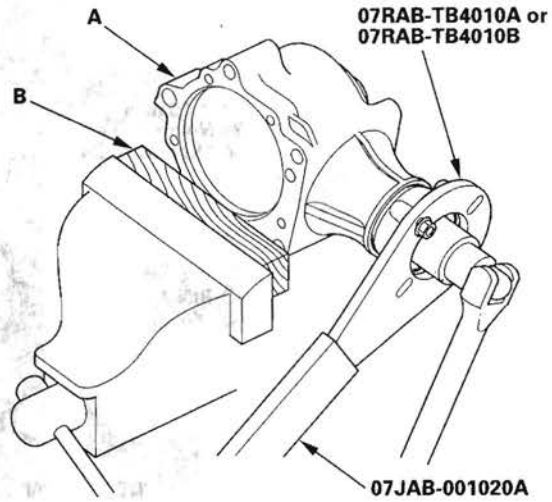

4. Install the companion flange holder on the companion flange, then loosen the locknut.

5. Remove the companion flange holder.

6. Remove the locknut (A), conical spring washer (B), back-up ring (C), O-ring (D), and companion flange (E) from the transfer output shaft (F).

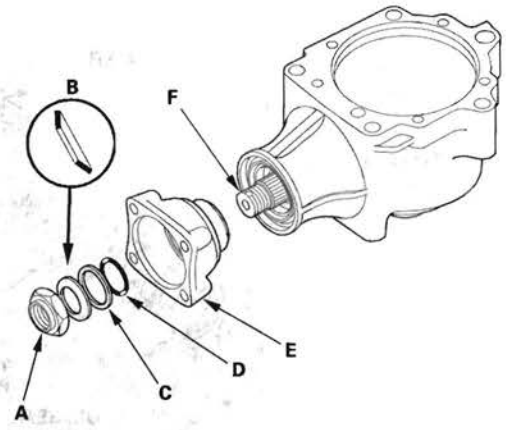

7. Remove the transfer output shaft (A) from the transfer housing (B), then remove the transfer spacer (C) from the transfer output shaft.

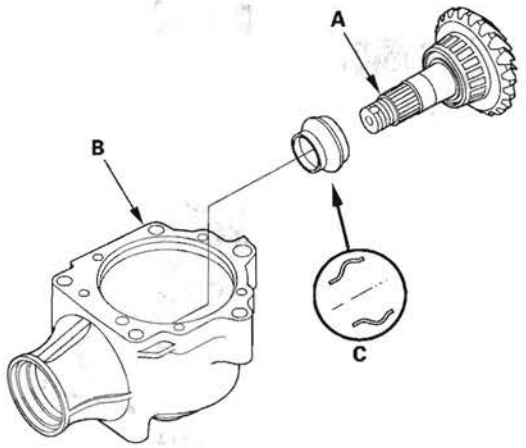

8. Remove the oil seal (A) and tapered roller bearing (B) from the transfer housing (C).

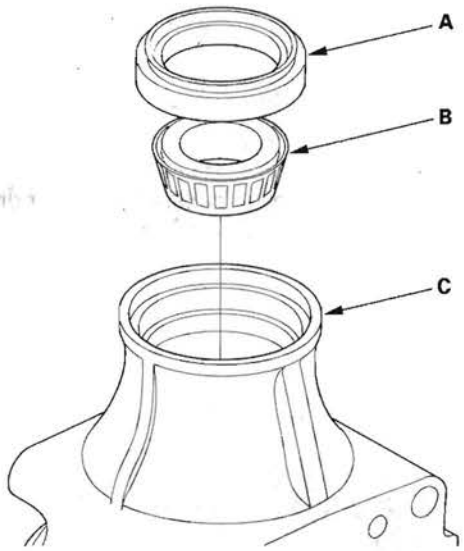

Transfer Assembly

Transfer Holder Disassembly

1. Cut the lock tab on the locknut of the transfer shaft using a chisel.

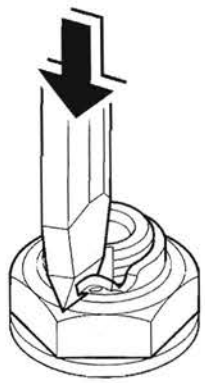

2. Put a 14 mm hex wrench (A) in the transfer shaft (B), then secure the hex wrench in a bench vise.

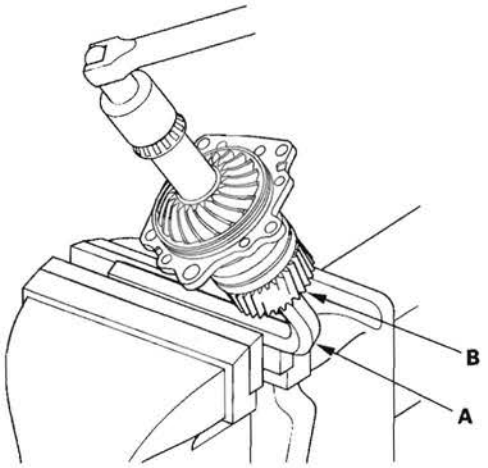

3. Remove the locknut (A) and conical spring washer (B).

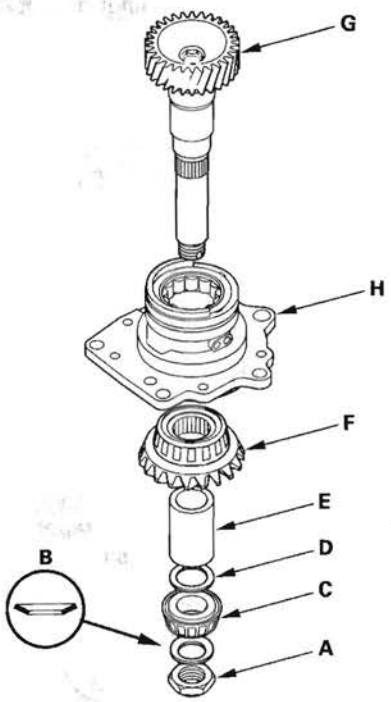

4. Remove the tapered roller bearing (C), 25 mm thrust shim (D), transfer collar (E), transfer drive gear (F), and transfer shaft (G) from the transfer holder (H).

Transfer Holder Roller Bearing Replacement

Special Tools Required
- Attachment, 62 x 68 mm 07746-0010500
- Driver 07749-0010000

1. Remove the roller bearing from the transfer holder.

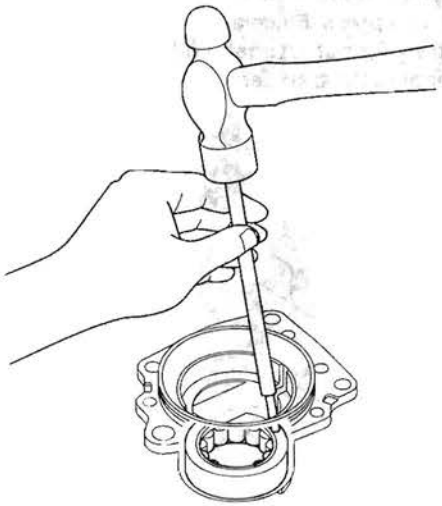

2. Install the new roller bearing in the transfer holder using the driver and the attachment (62 x 68 mm).

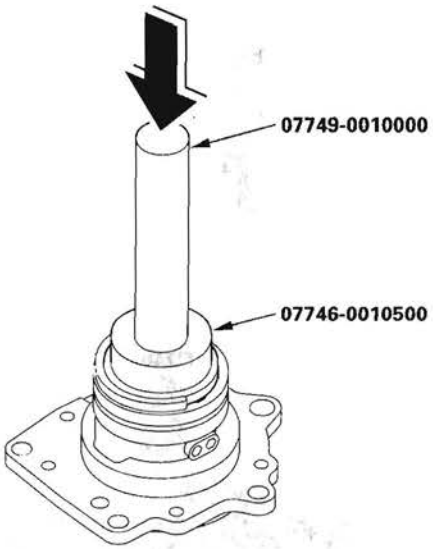

Transfer Holder Tapered Roller Bearing Outer Race Removal/ Installation

Special Tools Required
- Attachment, 72 x 75 mm 07746-0010600
- Driver 07749-0010000

1. Remove the tapered roller bearing outer race (A) and 75 mm thrust shim (B) from the transfer holder.

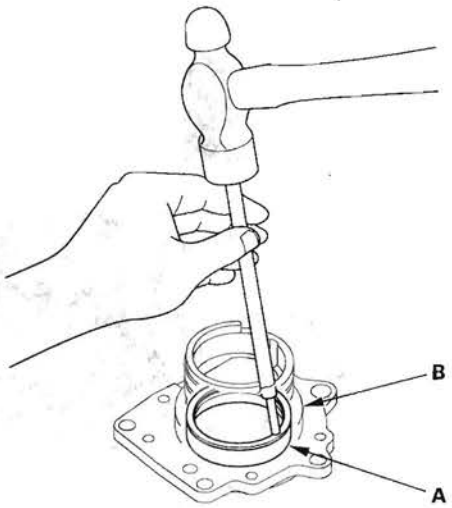

2. Install the 75 mm thrust shim (A) in the transfer holder, then install the tapered roller bearing outer race (B) using the driver and the attachment (72 x 75 mm).

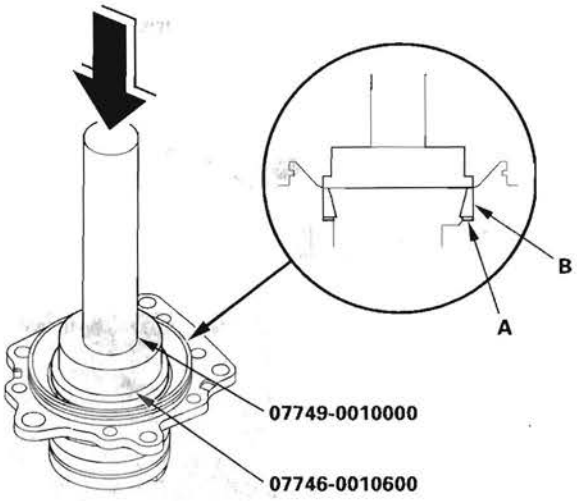

Transfer Drive Gear Bearing Replacement

Special Tools Required
- Attachment, 52 x 55 mm 07746-0010400
- Attachment, 40 x 42 mm 07746-0010900
- Driver 07749-0010000

1. Remove the tapered roller bearing (A) from the transfer drive gear (B) using the driver, the attachment (40 x 42 mm), bearing separator (C) and a press.

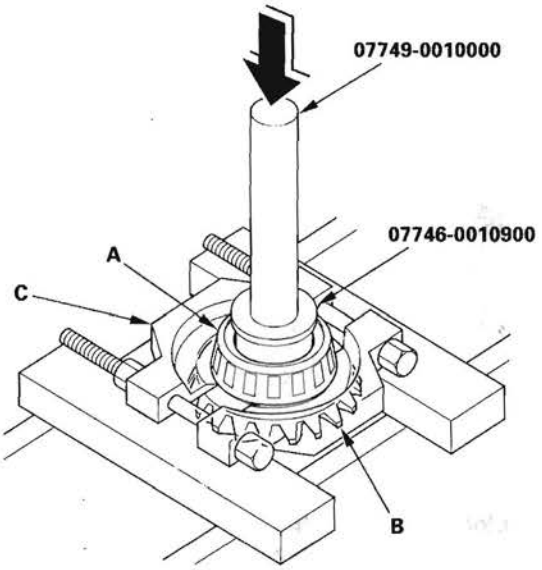

2. Install the new tapered roller bearing (A) on the transfer drive gear (B) using the driver, the attachment (52 x 55 mm), and a press.

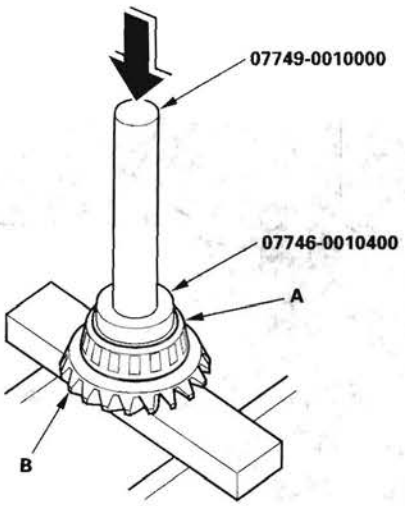

Transfer Output Shaft Bearing Removal/Installation

Special Tools Required
- Driver, 40 mm I.D. 07746-0030100
- Attachment, 35 mm I.D. 07746-0030400

1. Remove the tapered roller bearing (A) from the transfer output shaft (B) with the bearing separator (C) and a press. Place a shaft protector (D) between the transfer output shaft and the press to prevent damaging the transfer output shaft.

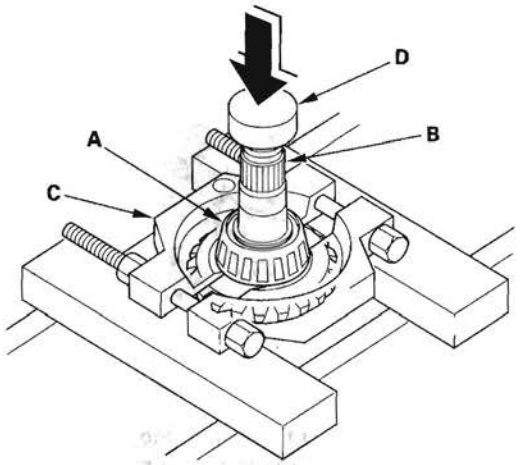

2. Install the 35 mm thrust shim (A) on the transfer output shaft (B).

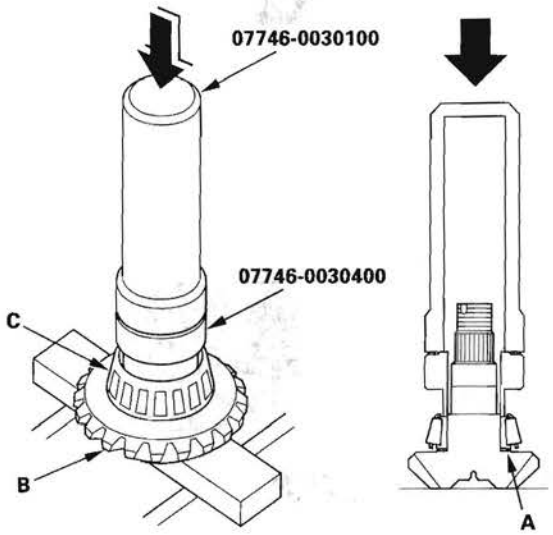

3. Install the tapered roller bearing (C) on the transfer output shaft using the driver (40 mm I.D.), the attachment (35 mm I.D.), and a press.

Transfer Housing Tapered Roller Bearing Outer Race Replacement

Special Tools Required
- Tapered bearing outer race attachment 070AF-PS50110
- Bearing installer attachment 07LAF-PZ70110
- Installer shaft 07MAF-SP0013A
- Oil seal driver attachment 07947-SD90101
- Driver 07749-0010000

NOTE: Replace the bearing with a new one whenever the outer race is replaced.

1. Remove the 57 mm bearing outer race (A) from the transfer housing (B).

   NOTE: Some 57 mm bearing outer races are press-fitted in the housing. The 62 mm bearing outer race (C) and 50.3 mm bearing outer race (D) are press-fitted, and the press-fitted outer races must be removed by heating the housing.

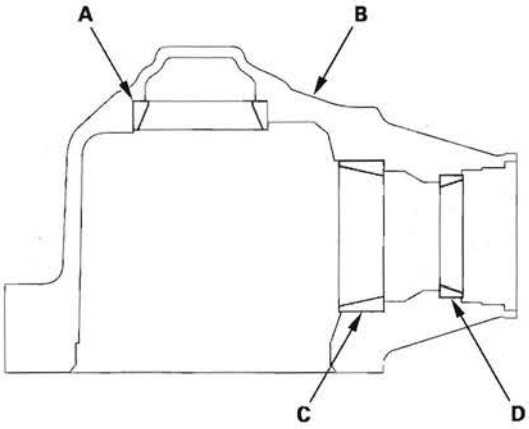

2. Remove the press-fitted bearing outer race (A) from the transfer housing (B) by heating the housing to about 212 °F (100 °C) with a heat gun (C). Do not heat the housing more than 212 °F (100 °C).

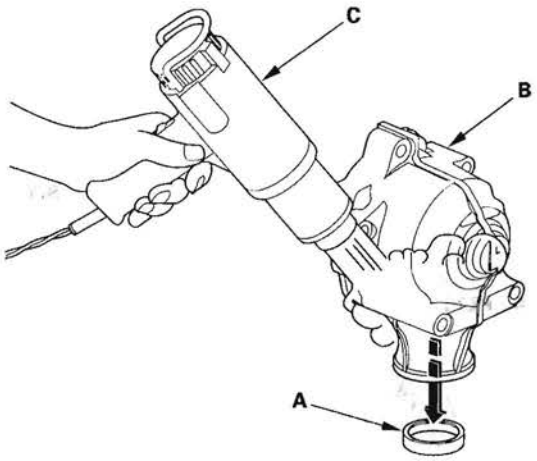

3. Install the 57 mm bearing outer race (A) in the transfer housing (B) using the driver and the oil seal driver attachment.

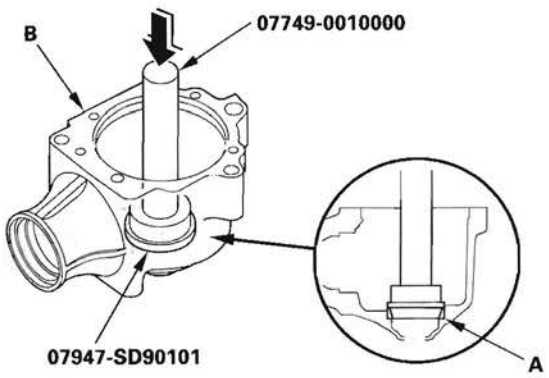

(cont'd)

Transfer Housing Tapered Roller Bearing Outer Race Replacement (cont'd)

4. Install the 62 mm bearing outer race (A) and 50.3 mm bearing outer race (B) in the transfer housing (C), set the attachments over the races, and install the installer shaft through the attachments.

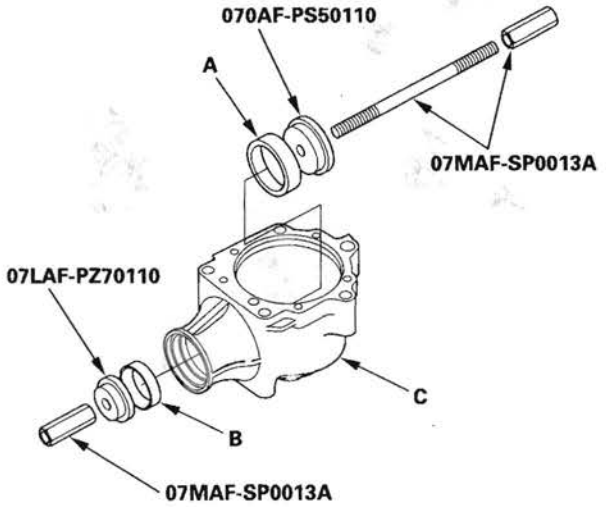

5. Tighten the installer shaft nut (D) to install the races (A) (B) into the transfer housing securely.

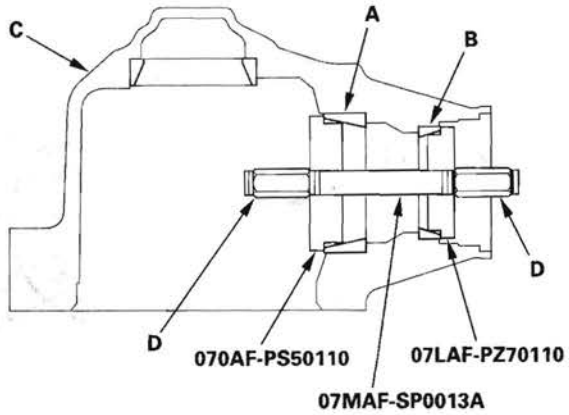

Reassembly

Special Tools Required
- Oil seal driver attachment 07JAD-PH80101
- Companion flange holder 07RAB-TB4010A or 07RAB-TB4010B
- Holder handle 07JAB-001020A
- Attachment, 72 x 75 mm 07746-0010600
- Driver, 40 mm I.D. 07746-0030100
- Attachment, 35 mm I.D. 07746-0030400
- Driver 07749-0010000

NOTE:
- While reassembling the transfer assembly:
  - Check and adjust the transfer gear tooth contact.
  - Measure and adjust the transfer gear backlash.
  - Check and adjust the tapered roller bearing starting torque.
- Coat all parts with ATF during reassembly.
- Replace the tapered roller bearing and the bearing outer race as a set if either part is replaced.
- Replace the transfer drive gear and the transfer output shaft as a set if either part is replaced.

1. Select the 35 mm thrust shim if the transfer output shaft is replaced. Calculate the thickness of the 35 mm thrust shim using the formula, and select the shim from the table.

   NOTE: The number on the transfer output shaft is shown in 1/100 mm.

   FORMULA: $X = \frac{A}{100} - \frac{B}{100} + C$

   A: Number on the existing transfer output shaft

   B: Number on the replacement transfer output shaft

   C: Thickness of the existing 35 mm thrust shim

   X: Thickness needed for the replacement 35 mm thrust shim

Example

A: Existing transfer output shaft (hypoid gear) Number = +2
B: Replacement transfer output shaft (hypoid gear) Number = −1
C: Existing 40 mm thrust shim thickness = 1.05 mm
X: Replacement 40 mm thrust shim thickness

X = A/100−B/100+C
= 2/100−(−1)/100+1.05
= 0.02+0.01+1.05 = 1.08 (mm)

Select 35 mm thrust shim M of 1.08 mm (0.043 in.)

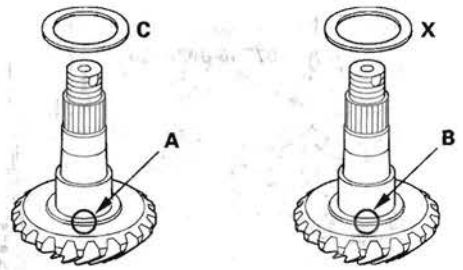

THRUST SHIM, 35 mm

Shim No.	Part Number	Thickness
A	41361-PS3-000	0.72 mm (0.028 in.)
B	41362-PS3-000	0.75 mm (0.030 in.)
C	41363-PS3-000	0.78 mm (0.031 in.)
D	41364-PS3-000	0.81 mm (0.032 in.)
E	41365-PS3-000	0.84 mm (0.033 in.)
F	41366-PS3-000	0.87 mm (0.034 in.)
G	41367-PS3-000	0.90 mm (0.035 in.)
H	41368-PS3-000	0.93 mm (0.037 in.)
I	41369-PS3-000	0.96 mm (0.038 in.)
J	41370-PS3-000	0.99 mm (0.039 in.)
K	41371-PS3-000	1.02 mm (0.040 in.)
L	41372-PS3-000	1.05 mm (0.041 in.)
M	41373-PS3-000	1.08 mm (0.043 in.)
N	41374-PS3-000	1.11 mm (0.044 in.)

2. Select the 35 mm thrust shim if the tapered roller bearing on the transfer output shaft is replaced. Measure the thickness of the replacement bearing and the existing bearing, and calculate the difference of the bearing thickness. Adjust the thickness of the existing 35 mm thrust shim by the amount of the difference in bearing thickness, and select the replacement 35 mm thrust shim from the table.

(cont'd)

Reassembly (cont'd)

3. Install the 35 mm thrust shim (A) on the transfer output shaft (B), then install the tapered roller bearing (C) using the driver (40 mm I.D.), the attachment (35 mm I.D.), and a press.

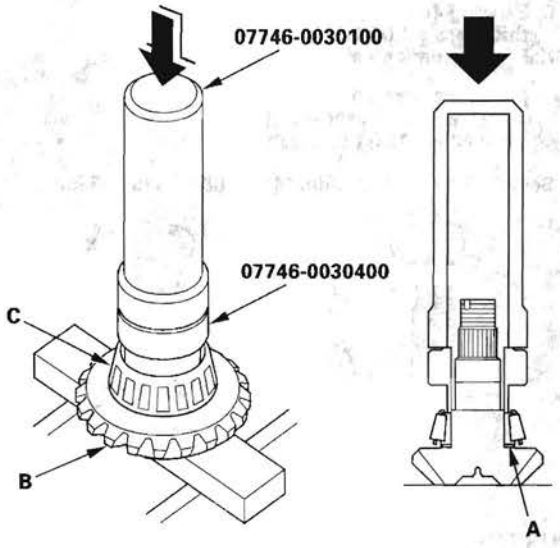

4. Place the tapered roller bearing (A) on the bearing outer race of the companion flange side of the transfer housing.

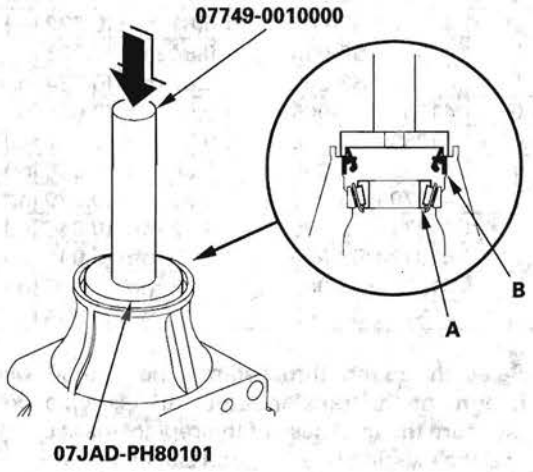

5. Install the new oil seal (B) on the transfer housing using the driver and the oil seal driver attachment.

6. Install the output shaft (A) in the transfer housing (B). Do not install the transfer spacer on the transfer output shaft.

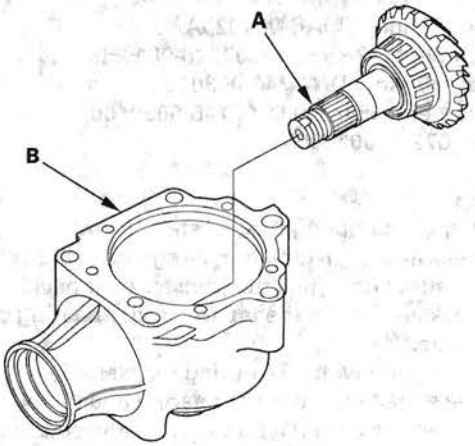

7. Install the companion flange (A), conical spring washer (B), and locknut (C) on the transfer output shaft (D). Do not install the O-ring and back-up ring.

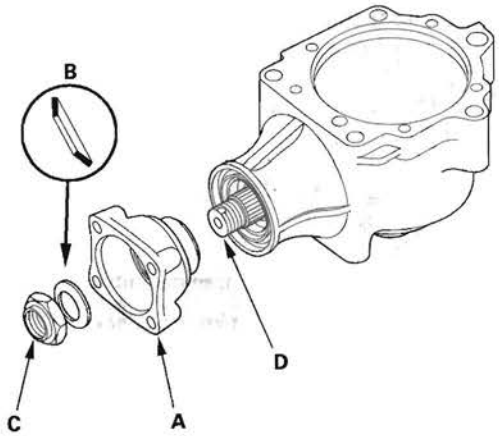

8. Secure the transfer housing (A) in a bench vise (B) with soft jaws. To prevent damage to the transfer housing, always use soft jaws or equivalent materials between the transfer housing and the vise.

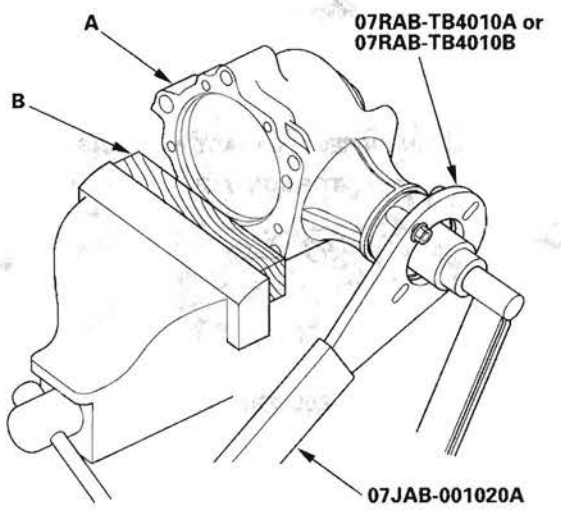

9. Install the companion flange holder on the companion flange.

10. Tighten the locknut while measuring the starting torque so the starting torque is within 0.98—1.39 N·m (10.0—14.2 kgf·cm, 8.7—12.3 lbf·in.). Do not stake the locknut in this step. Remove the companion flange holder.

11. Install the transfer shaft (A) in the transfer holder (B), and install the transfer drive gear (C), transfer collar (D), 25 mm thrust shim (E), tapered roller bearing (F), conical spring washer (G), and locknut (H).

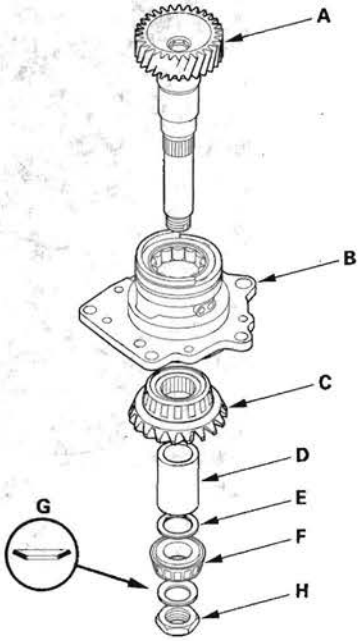

12. Put a 14 mm hex wrench (A) in the transfer shaft (B), then secure the hex wrench in a bench vise.

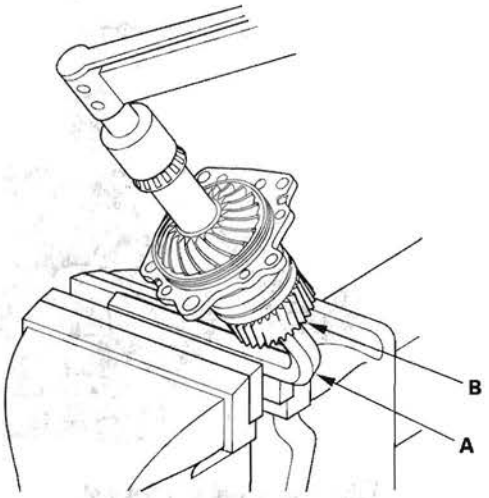

13. Tighten the locknut 118 N·m (12.0 kgf·m, 87 lbf·ft). Do not stake the locknut in this step.

(cont'd)

Reassembly (cont'd)

14. Apply Prussian Blue to both sides of the transfer drive gear teeth lightly and evenly.

15. Temporarily install the transfer holder (A) and dowel pin (B) without O-ring, and tighten the bolts.

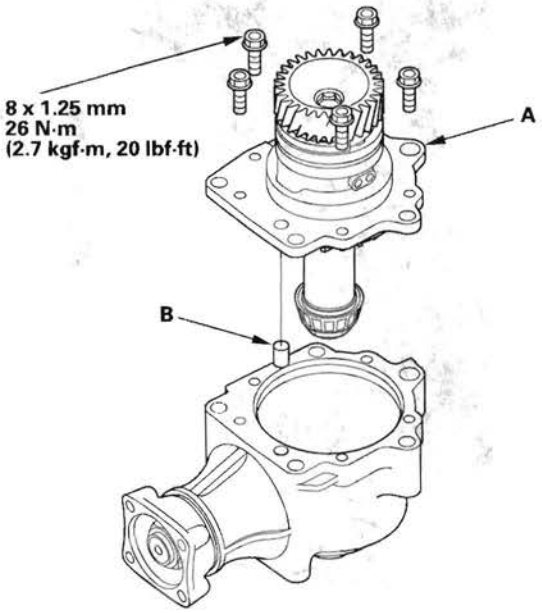

16. Rotate the companion flange in both directions until the transfer gears rotate one full turn in both directions.

17. Set a dial indicator (A) on the companion flange (B).

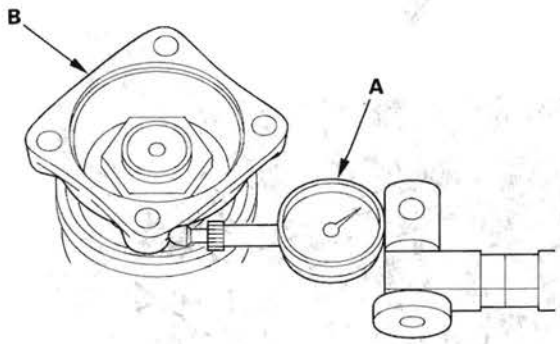

18. Measure the transfer gear backlash.

Standard: 0.06—0.16 mm (0.02—0.06 in.)

19. Remove the transfer holder, and check the transfer drive gear tooth contact pattern.

CORRECT CONTACT PATTERN

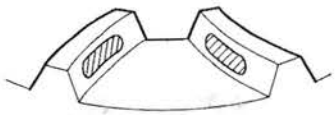

INCORRECT CONTACT PATTERNS

TOE CONTACT

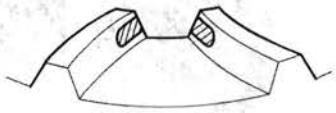

HEEL CONTACT

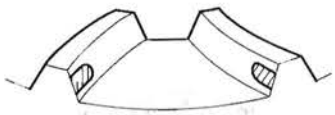

FLANK CONTACT

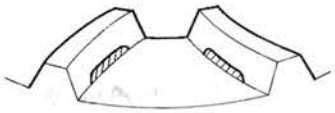

FACE CONTACT

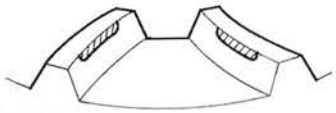

20. If the backlash measurement is out of standard, adjust the backlash with the 35 mm thrust shim and recheck. Do not use more than two 35 mm thrust shims to adjust the backlash.

21. If the transfer gear tooth contact is incorrect, adjust the tooth contact with the 25 mm or 35 mm thrust shim. Do not use more than two of each thrust shim to adjust the tooth contact.

    • Toe Contact
    Use a thicker 35 mm thrust shim to move the transfer output shaft toward the transfer drive gear. Because this movement causes the transfer gear backlash to change, move the transfer drive gear away from the transfer output shaft to adjust the transfer gear backlash as follows:
    – Increase the thickness of the 25 mm thrust shim.
    – Reduce the thickness of the 75 mm thrust shim by the amount you increased the 25 mm thrust shim.

    • Heel Contact
    Use a thinner 35 mm thrust shim to move the transfer output shaft away from the transfer drive gear. Because this movement causes the transfer gear backlash to change, move the transfer drive gear toward the transfer output shaft to adjust the transfer gear backlash as follows:
    – Reduce the thickness of the 25 mm thrust shim
    – Increase the thickness of the 75 mm thrust shim by amount you reduced the thickness of the 25 mm thrust shim.

    • Flank Contact
    Use a thinner thrust shim to move the transfer drive gear toward the transfer output shaft. Flank contact must be adjusted within the limits of the transfer gear backlash. If the backlash exceeds the limits, adjust as described under Heel Contact.

    • Face Contact
    Use a thicker thrust shim to move the transfer drive gear away from the transfer output shaft. Face contact must be adjusted within the limits of the transfer gear backlash. If the backlash exceeds the limits, adjust as described under Toe Contact.

THRUST SHIM, 25 mm

Shim No.	Part Number	Thickness
1.70	29411-P1C-000	1.70 mm (0.067 in.)
1.73	29412-P1C-000	1.73 mm (0.068 in.)
1.76	29413-P1C-000	1.76 mm (0.069 in.)
1.79	29414-P1C-000	1.79 mm (0.070 in.)
1.82	29415-P1C-000	1.82 mm (0.072 in.)
1.85	29416-P1C-000	1.85 mm (0.073 in.)
1.88	29417-P1C-000	1.88 mm (0.074 in.)
1.91	29418-P1C-000	1.91 mm (0.075 in.)
1.94	29419-P1C-000	1.94 mm (0.076 in.)
1.97	29420-P1C-000	1.97 mm (0.078 in.)
2.00	29421-P1C-000	2.00 mm (0.079 in.)
2.03	29422-P1C-000	2.03 mm (0.080 in.)
2.06	29423-P1C-000	2.06 mm (0.081 in.)
2.09	29424-P1C-000	2.09 mm (0.082 in.)
2.12	29425-P1C-000	2.12 mm (0.083 in.)
2.15	29426-P1C-000	2.15 mm (0.085 in.)
2.18	29427-P1C-000	2.18 mm (0.086 in.)
2.21	29428-P1C-000	2.21 mm (0.087 in.)
2.24	29429-P1C-000	2.24 mm (0.088 in.)

22. Remove the transfer holder (A) from the transfer housing (B) after adjusting the transfer gear backlash or transfer gear tooth contact.

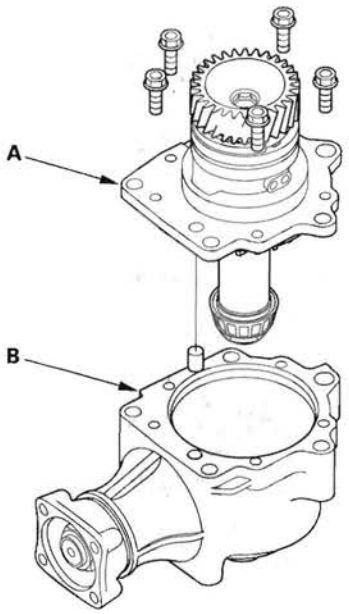

(cont'd)

Reassembly (cont'd)

23. Secure the transfer housing (A) in a bench vise (B) with soft jaws. To prevent damage to the transfer housing, always use soft jaws or equivalent materials between the transfer housing and the vise.

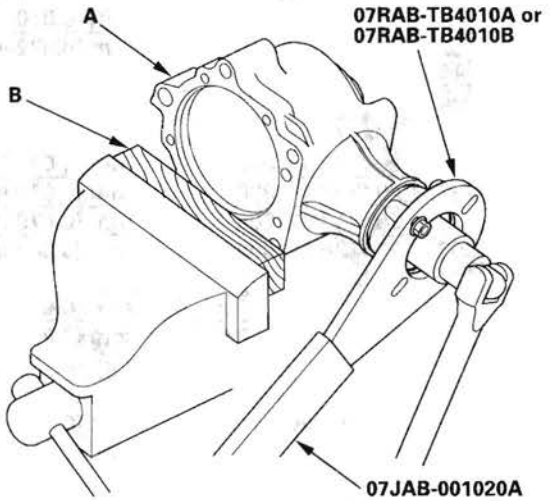

24. Install the companion flange holder on the companion flange, loose the locknut, and remove the companion flange holder.

25. Remove the locknut (A), conical spring washer (B), and companion flange (C) from the transfer driven gear (D).

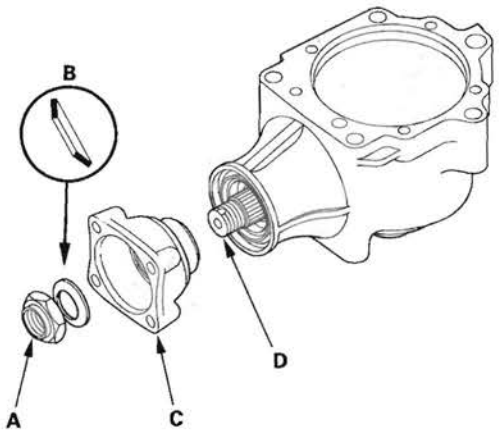

26. Remove the transfer output shaft (A) from the transfer housing (B).

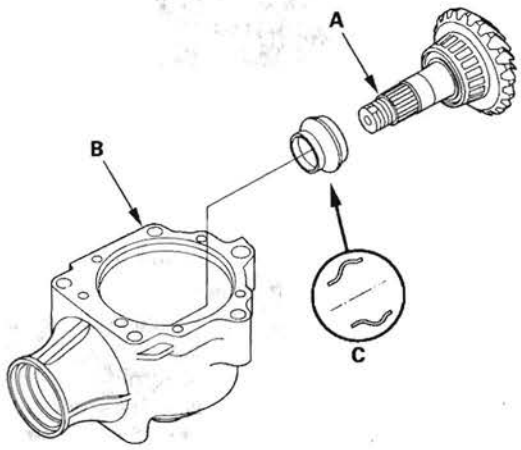

27. Install the new transfer spacer (C) on the transfer output shaft in the direction shown, and install them in the transfer housing.

28. Coat the threads of the locknut and transfer output shaft with ATF.

29. Install the companion flange (A), new O-ring (B), back-up ring (C), new conical spring washer (D), and new locknut (E) on the transfer output shaft (F). Install the conical spring washer in the direction shown.

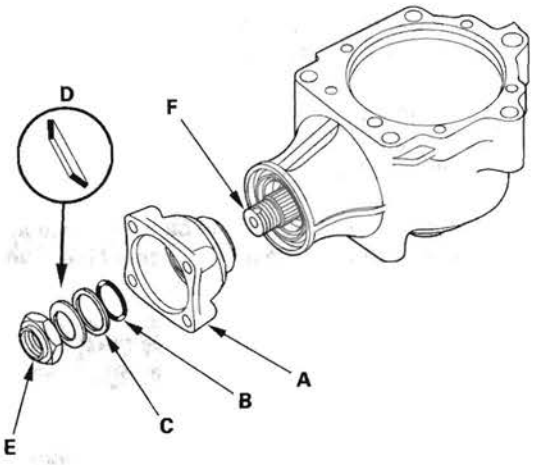

30. Secure the transfer housing (A) in a bench vise (B) with soft jaws. To prevent damage to the transfer housing, always use soft jaws or equivalent materials between the transfer housing and the vise.

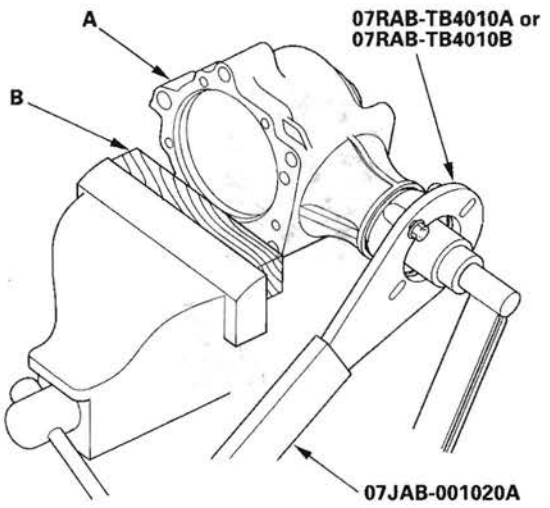

31. Install the companion flange holder on the companion flange.

32. Tighten the locknut while measuring the starting torque of the transfer output shaft.

Starting torque:
0.98—1.39 N·m (10.0—14.2 kgf·cm, 8.7—12.3 lbf·in.)
Tightening torque:
132—260 N·m (13.5—26.5 kgf·m, 97.6—192 lbf·ft)

NOTE:
- Rotate the companion flange several turns to seat the tapered roller bearings, then measure the starting torque.
- If the starting torque exceeds 1.39 N·m (14.2 kgf·cm, 12.3 lbf·in.), replace the transfer spacer and reassemble the parts. Do not adjust the starting torque with the locknut loose.
- If the tightening torque exceeds 260 N·m (26.5 kgf·m, 192 lbf·ft), replace the transfer spacer and reassemble the parts.

33. Remove the companion flange holder.

34. Stake the locknut into the transfer output shaft in depth (A) of 0.7—1.2 mm (0.03—0.05 in.) using a 3.5 mm punch (B).

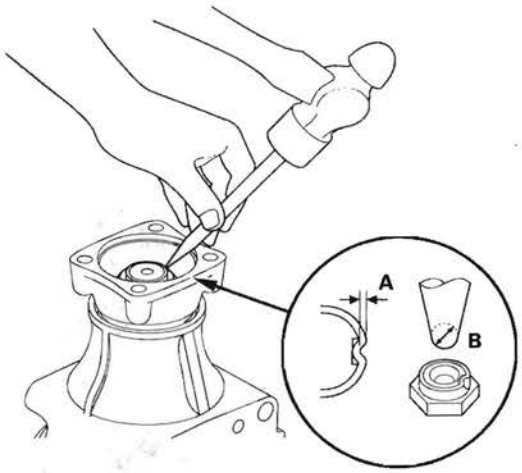

35. Temporarily install the transfer holder (A) and dowel pin (B) without O-ring, and tighten the bolts.

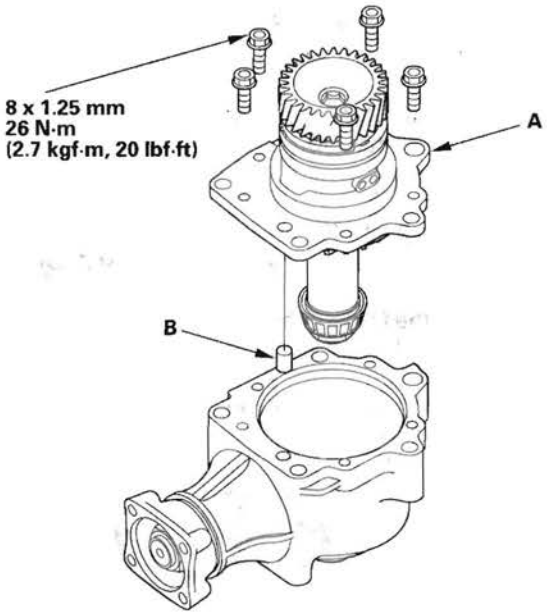

(cont'd)

Reassembly (cont'd)

36. Secure the transfer housing (A) in a bench vise (B) with soft jaws. To prevent damage to the transfer housing, always use soft jaws or equivalent materials between the transfer housing and the vise.

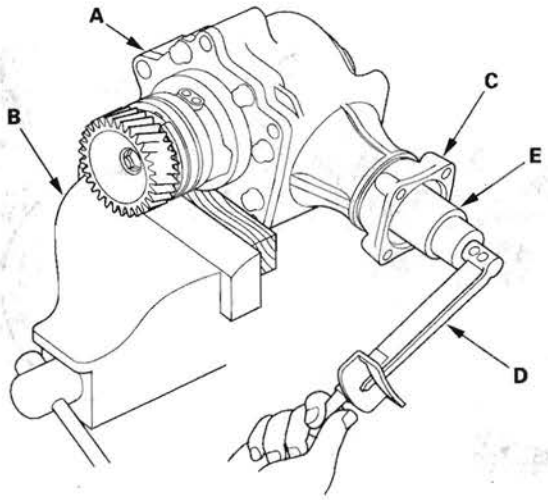

37. Rotate the companion flange several times to seat the tapered roller bearing.

38. Measure the starting torque at the companion flange (C) using a torque wrench (D) and a socket (E).

    Standard: 2.44—3.87 N·m (24.8—39.4 kgf·cm, 21.5—34.1 lbf·in.)

39. Remove the transfer holder from the transfer housing.

40. If the measurement is within the standard, go to step 53.

41. If the measurement is out of standard, put a 14 mm hex wrench (A) in the transfer shaft (B), then secure the hex wrench in a bench vise.

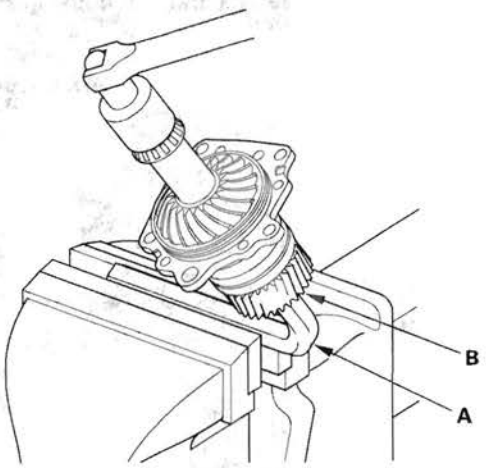

42. Loosen the locknut.

43. Remove the locknut (A) and conical spring washer (B).

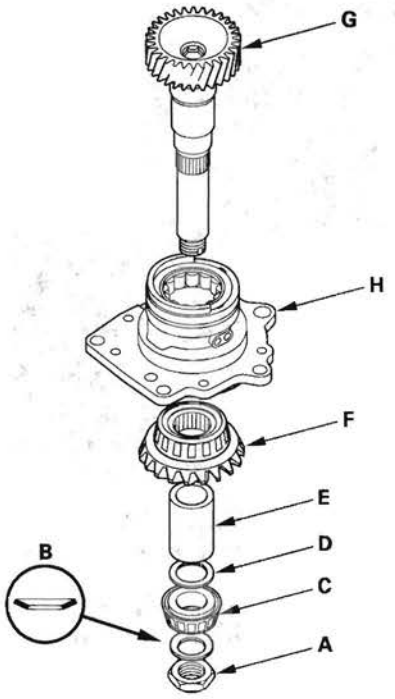

44. Remove the tapered roller bearing (C), 25 mm thrust shim (D), transfer collar (E), transfer drive gear (F), and transfer shaft (G) from the transfer holder (H).

45. Remove the tapered roller bearing outer race (A) and the 75 mm thrust shim (B) from the transfer holder (C).

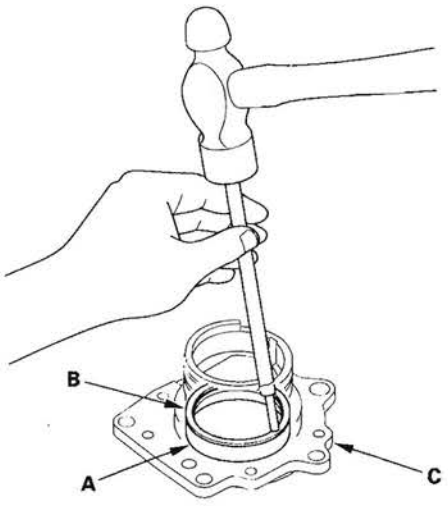

46. Measure the thickness of the 75 mm thrust shim, and select the new 75 mm thrust shim.

THRUST SHIM, 75 mm

Shim No.	Part Number	Thickness
AA	41401-PGV-000	1.52 mm (0.060 in.)
AB	41402-PGV-000	1.55 mm (0.061 in.)
AC	41403-PGV-000	1.58 mm (0.062 in.)
AD	41404-PGV-000	1.61 mm (0.063 in.)
AE	41405-PGV-000	1.64 mm (0.065 in.)
B	41402-PW8-010	1.67 mm (0.066 in.)
C	41403-PW8-010	1.70 mm (0.067 in.)
D	41404-PW8-010	1.73 mm (0.068 in.)
E	41405-PW8-010	1.76 mm (0.069 in.)
F	41406-PW8-010	1.79 mm (0.070 in.)
G	41407-PW8-010	1.82 mm (0.072 in.)
H	41408-PW8-010	1.85 mm (0.073 in.)
I	41409-PW8-010	1.88 mm (0.074 in.)
J	41410-PW8-010	1.91 mm (0.075 in.)
K	41411-PW8-010	1.94 mm (0.076 in.)
L	41412-PW8-010	1.97 mm (0.078 in.)
M	41413-PW8-010	2.00 mm (0.079 in.)
N	41414-PW8-010	2.03 mm (0.080 in.)
O	41415-PW8-010	2.06 mm (0.081 in.)
P	41416-PW8-010	2.09 mm (0.082 in.)
Q	41417-PW8-010	2.12 mm (0.083 in.)
R	41418-PW8-010	2.15 mm (0.085 in.)
S	41419-PW8-010	2.18 mm (0.086 in.)
T	41420-PW8-010	2.21 mm (0.087 in.)
U	41421-PW8-010	2.24 mm (0.088 in.)
V	41422-PW8-010	2.27 mm (0.089 in.)
W	41423-PW8-010	2.30 mm (0.091 in.)
X	41424-PW8-010	2.33 mm (0.092 in.)
Y	41425-PW8-010	2.36 mm (0.093 in.)
Z	41426-PW8-010	2.39 mm (0.094 in.)
ZA	41406-PGV-000	2.42 mm (0.095 in.)
ZB	41407-PGV-000	2.45 mm (0.096 in.)
ZC	41408-PGV-000	2.48 mm (0.098 in.)
ZD	41409-PGV-000	2.51 mm (0.099 in.)
ZE	41410-PGV-000	2.54 mm (0.100 in.)
ZF	41411-PGV-000	2.57 mm (0.101 in.)
ZG	41412-PGV-000	2.60 mm (0.102 in.)
ZH	41413-PGV-000	2.63 mm (0.104 in.)
ZI	41414-PGV-000	2.66 mm (0.105 in.)

(cont'd)

Reassembly (cont'd)

47. Install the new 75 mm thrust shim (A) in the transfer holder, then install the tapered roller bearing outer race (B) using the driver and the attachment (72 x 75 mm).

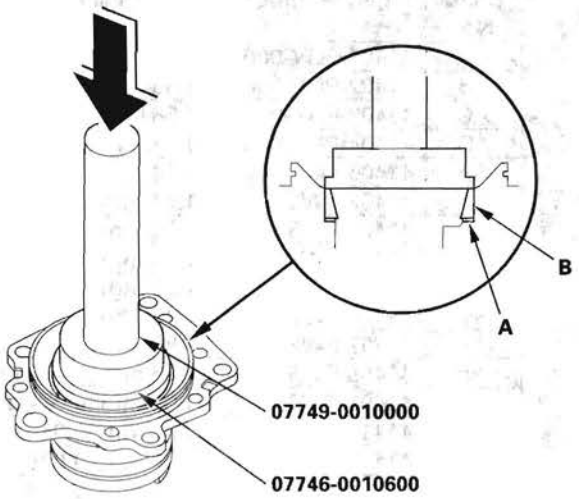

48. Install the transfer shaft (A) in the transfer holder (B), and install the transfer drive gear (C), transfer collar (D), 25 mm thrust shim (E), tapered roller bearing (F), conical spring washer (G), and locknut (H). Install the conical spring washer in the direction shown.

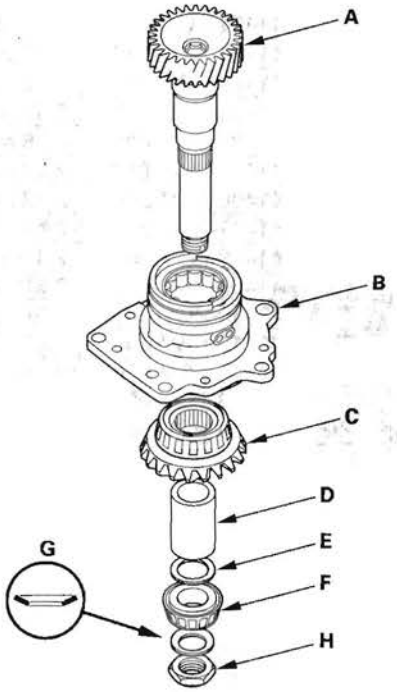

49. Put a 14 mm hex wrench (A) in the transfer shaft (B), then secure the hex wrench in a bench vise.

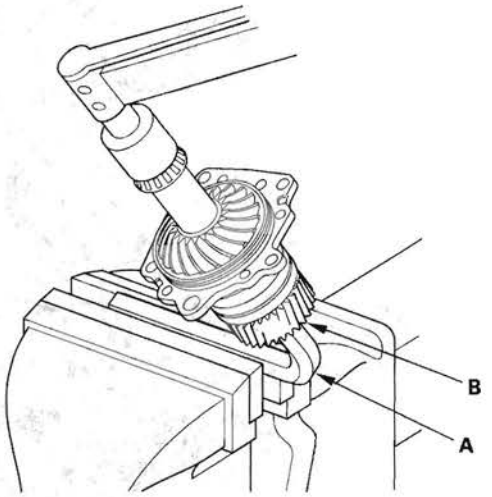

50. Tighten the locknut 118 N·m (12.0 kgf·m, 87 lbf·ft). Do not stake the locknut in this step.

51. Temporarily install the transfer holder (A) and dowel pin (B) without the O-ring, and tighten the bolts.

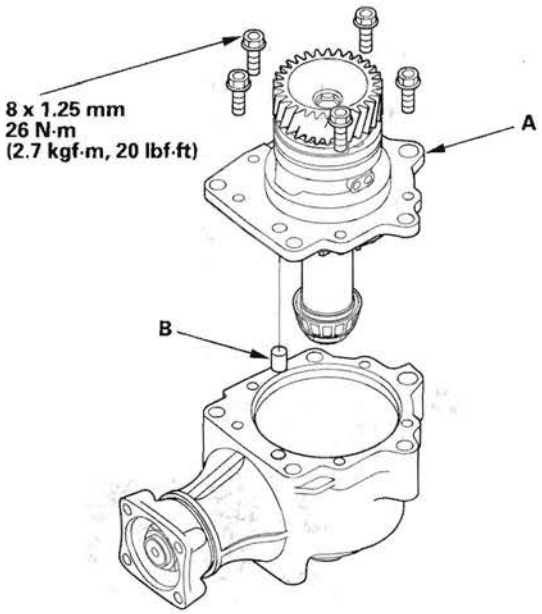

52. Rotate the companion flange several turns to seat the tapered roller bearings, and recheck the starting torque. Remove the transfer holder after adjusting the starting torque.

53. Stake the locknut into the transfer shaft in depth (A) of 0.7—1.2 mm (0.03—0.05 in.) using a 3.5 mm punch (B).

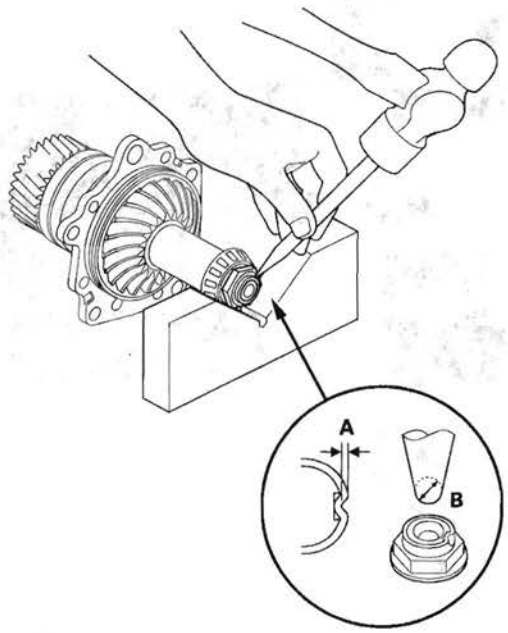

54. Install the new O-ring (A) on the transfer holder (B), then install the transfer holder with the dowel pin (C) on the transfer housing (D).

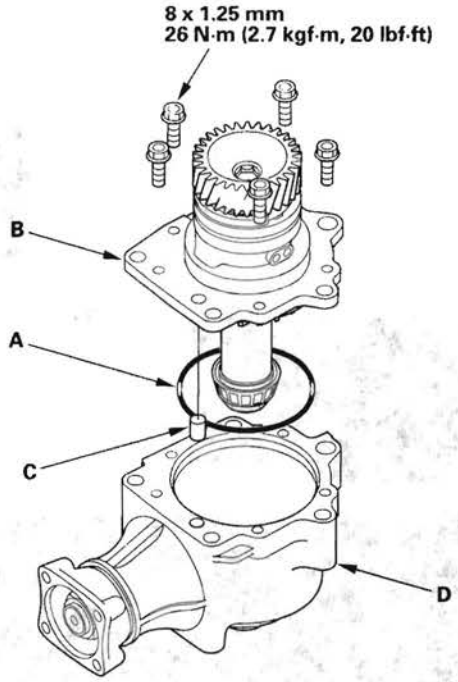

Rear Differential

Special Tools 15-2
Component Location Index 15-3
System Description 15-4
Dual Pump System Function Test 15-18
Symptom Troubleshooting Index 15-20
Rear Differential Fluid Inspection and Replacement 15-21
Differential Removal 15-22
Differential Housing Assembly Removal and Installation 15-23
Oil Seal Replacement 15-24
Differential Disassembly 15-26
Differential Reassembly 15-29
Differential Mount Replacement 15-34
Differential Installation 15-35



Special Tools

Ref. No.	Tool Number	Description	Qty
①	07JAB-001020A	Holder Handle	1
②	07JAD-PL90100	Oil Seal Driver	1
③	07NAD-PX40100	Attachment, 78 x 80 mm	1
④	07NAD-P200100	Attachment, 52 x 55 mm	1
⑤	07RAB-TB4010B	Companion Flange Holder	1
⑥	07749-0010000	Driver	1



①

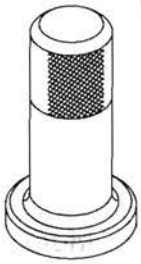

②

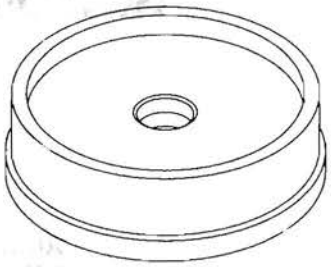

③

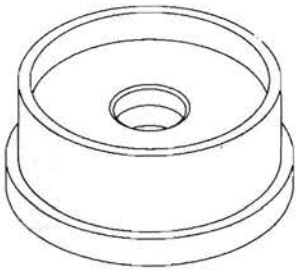

④

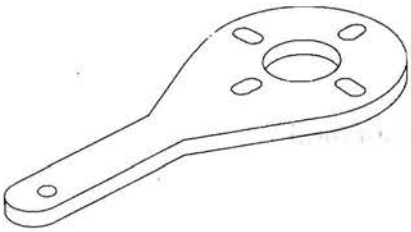

⑤

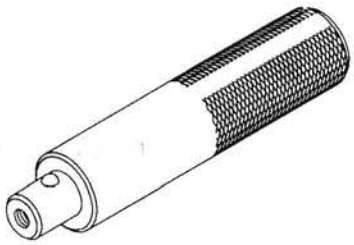

⑥

Component Location Index

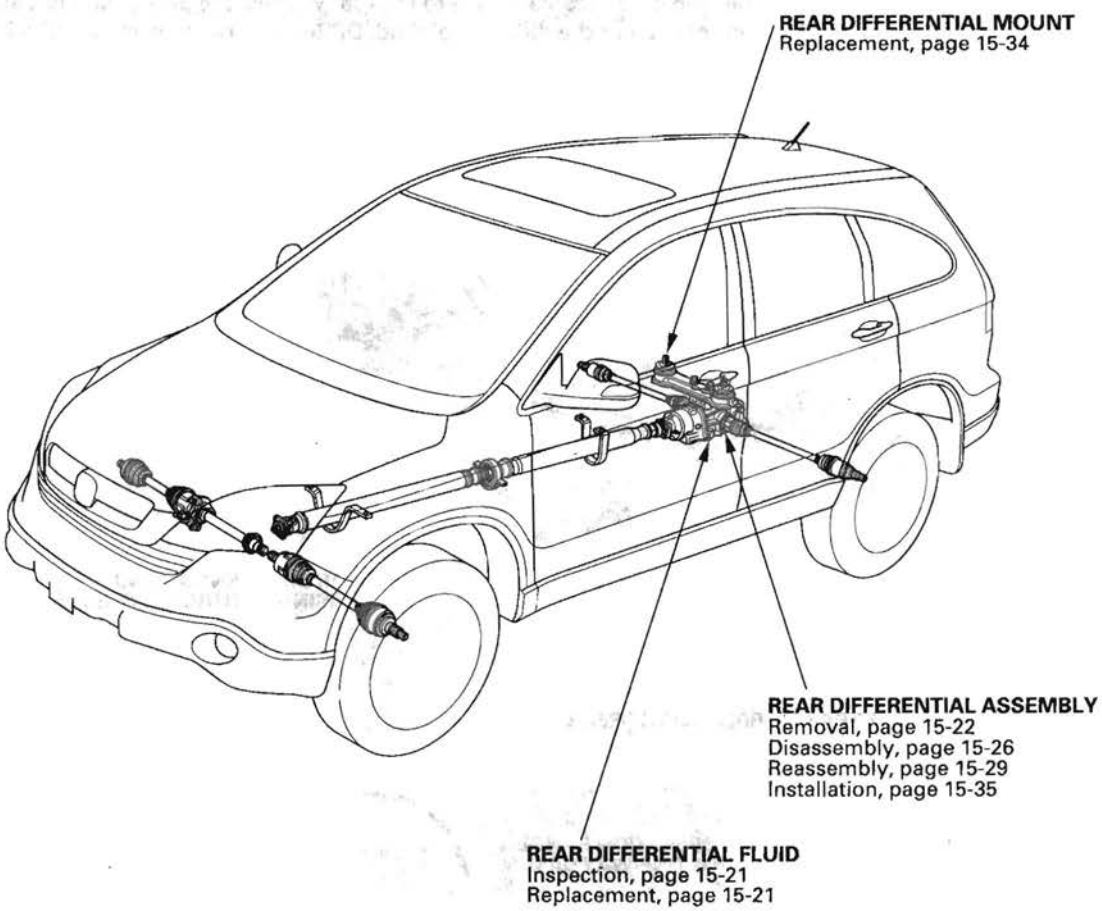

Rear Differential

System Description

Outline

The rear differential has a real-time 4WD control mechanism that enables 4WD by transmitting appropriate driving force from the front wheels to the rear wheels when necessary. It uses a real-time 4WD dual pump system (DPS) with a light and compact cam mechanism, and integrates the drive control system to the rear differential.
Equipped with a cam mechanism, this DPS real-time 4WD detects the speed difference between the front and rear wheels. When speed difference is small, the one-way cam works to minimize the time lag for the pump to produce hydraulic pressure.
When the speed difference is large, hydraulic pressure develops in the two pumps. By controlling the engagemment of the main clutch, the driving force transmitted to the rear wheels is optimized according to the driving conditions. By using a limiter switch to prevent transmission of excessive torque to the rear wheels, the propeller shaft and differential unit can be lightweight and compact. For the differential fluid, DPSF (dual pump system fluid) is exclusively used.

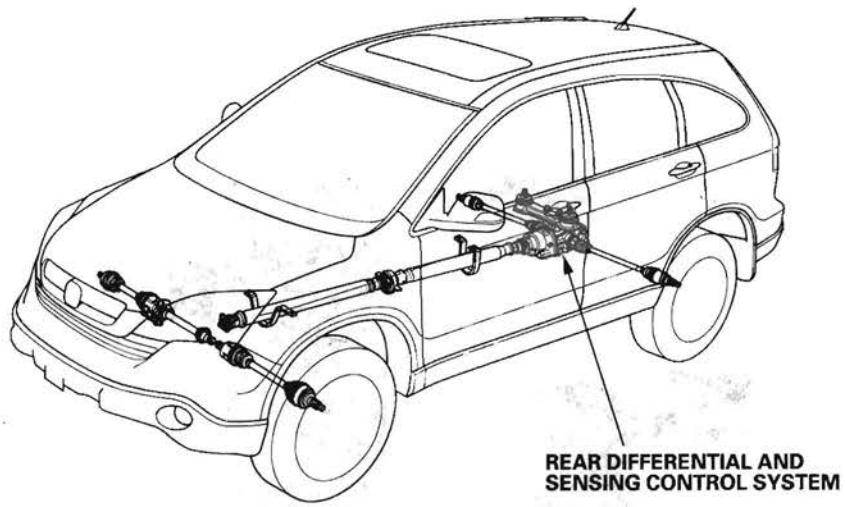

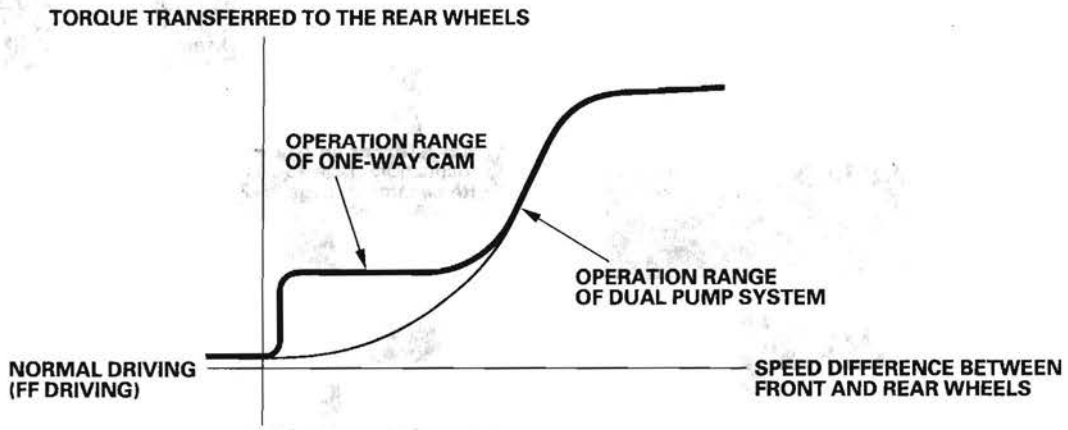

One-way Cam Operation

The one-way cam unit consists of two cams (front wheel and rear wheel) that sandwich balls, and it detects by the speed difference in the front and rear wheels.
When a difference of the front and rear wheel speeds develops, a difference in the rotational speed of the two cams also develops, and the front cam rotational speed exceeds that of the rear cam. When this happens, the balls move along the cam groove, pushes and widens the cams, and applies pressure to the main clutch. When the speed difference becomes greater, the dual pump system (DPS) operates. Since the cam unit is a one-way type, it only operates when driving forward.

NORMAL DRIVING:

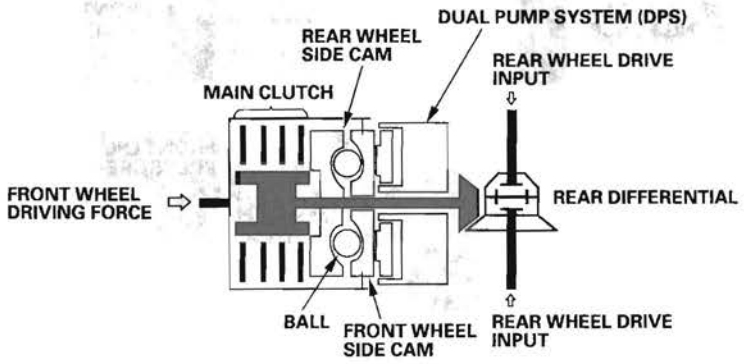

CAM UNIT OPERATION:

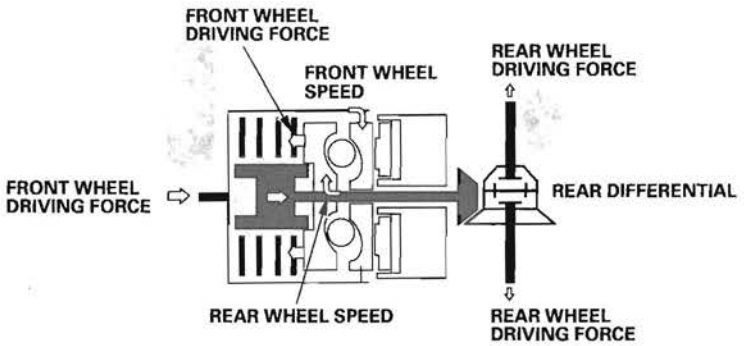

DUAL PUMP SYSTEM (DPS) OPERATION:

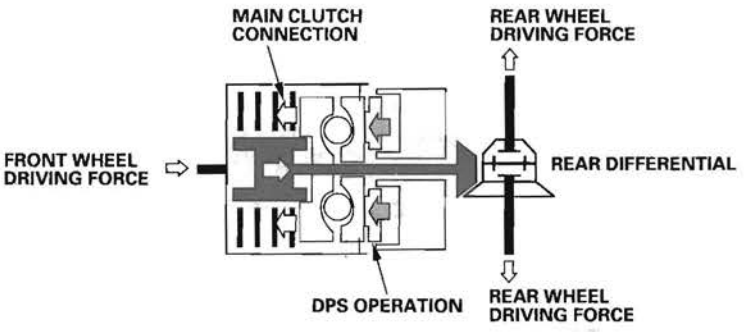

(cont'd)

System Description (cont'd)

Dual Pump System (DPS) Operation

For non-slippery roads (no slipping): DPS not operating
When the front and rear wheel speeds are equal (no slipping) as in normal driving, the oil discharged in the front wheel and oil drawn in the rear pump are equal, so a hydraulic pressure that pushes the wet-type multi-clutch is not developed, and the rear wheels are not driven.

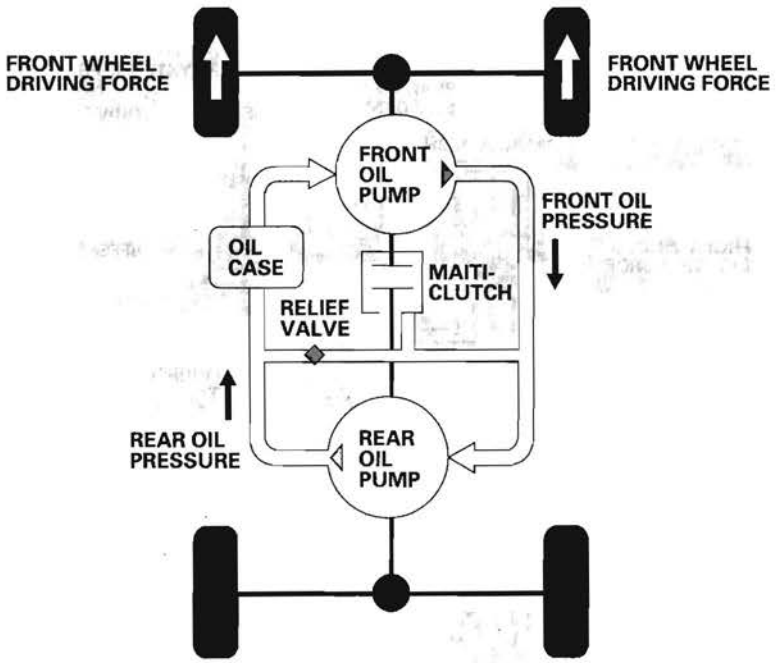

For slippery roads (with slipping): DPS operating

When the front wheel speed is more than the rear wheel speed such as in starting, acceleration, and driving on a slippery road surface, the amount of oil discharged by the front pump exceeds the oil drawn by the rear pump, thus producing hydraulic pressure that presses the wet-type multi-plate clutch, and transmits driving force to the rear wheels.

When the speed of the front wheels becomes even greater than the rear wheels, the torque limiter mechanism (relief valve) limits the hydraulic pressure that pushes the wet-type multi-plate clutch, and transmits only the necessary driving force to the rear wheels as needed by 4WD driving.

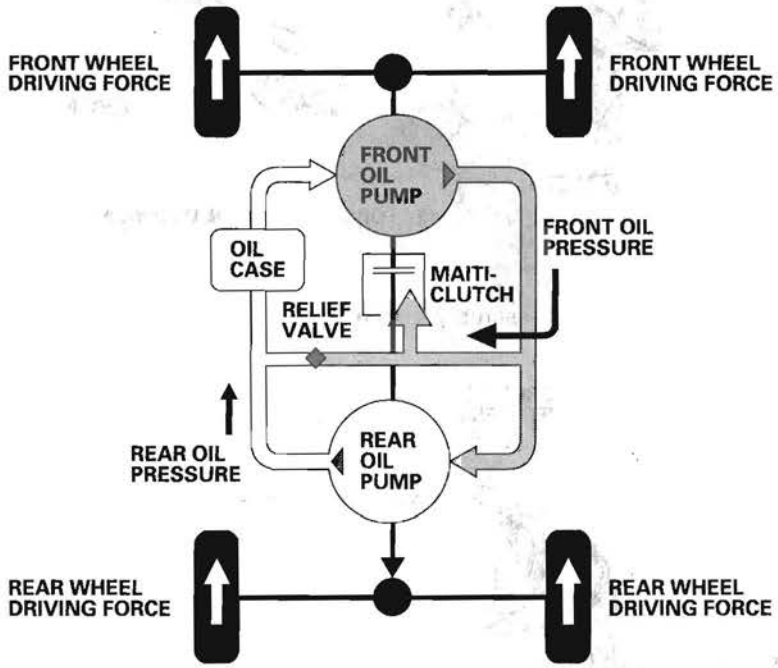

(cont'd)

System Description (cont'd)

Construction of the Rear Differential

The rear differential assembly consists of the torque control differential (TCD) that controls the 4WD mechanism and the rear differential mechanism section.

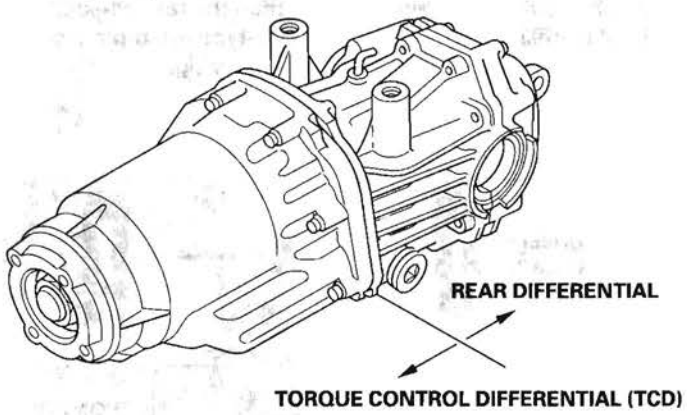

TCD
The TCD consists of the TCD case, differential assembly, clutch, one-way cam, and the oil pump body assembly.

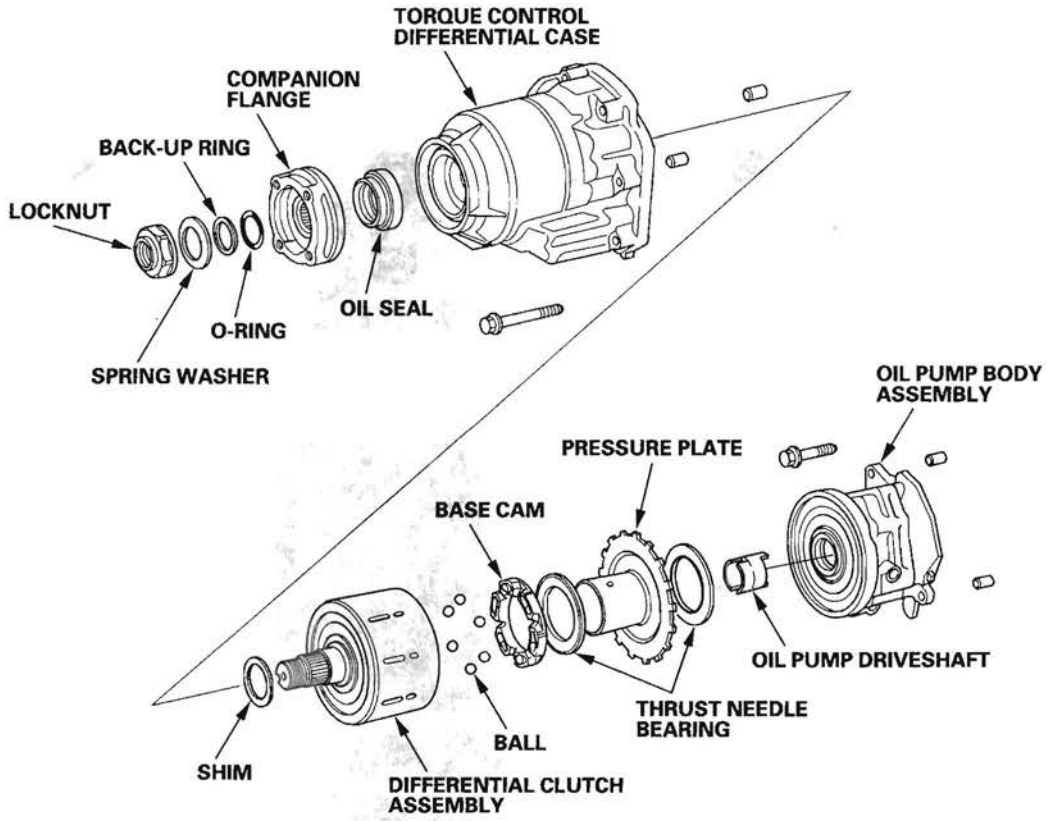

Differential clutch assembly

The differential clutch assembly is composed of the clutch guide, clutch disc A/B, clutch hub, pressure plate, and also the one-way cam, pilot clutch assembly, and other parts. The clutch guide gets the front wheel driving force from the propeller shaft, while the clutch hub meshes with the hypoid drive pinion gear, and follows the speed of the rear wheels.

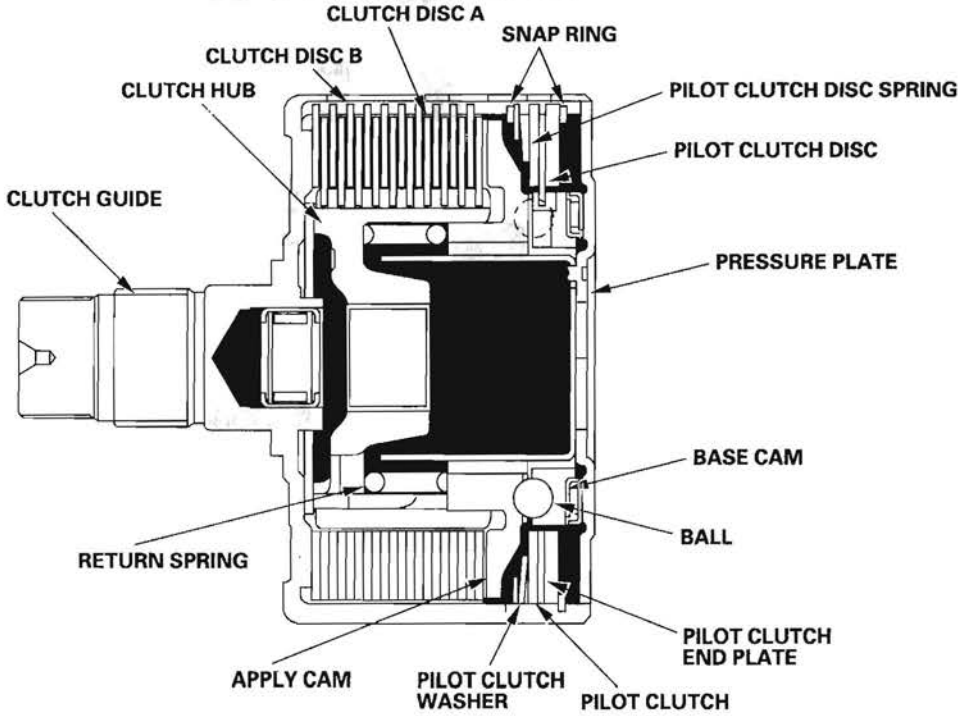

Construction of the one-way cam

The one-way cam consists of the base cam that spins with the clutch guide via the pilot clutch, the apply cam that meshes with the clutch hub, and a steel ball that is sandwiched by the two cams. The base cam rotates at front wheel speed and the apply cam rotates at rear wheel speed.

When speed difference develops, the steel ball moves along the groove in the base cam, and according to the shape of the groove, pushes the apply cam outwards.

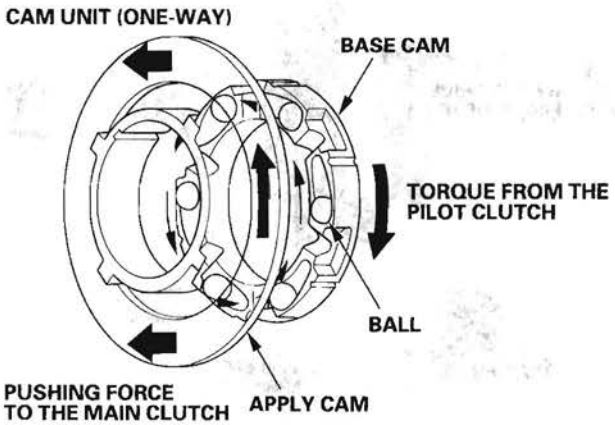

(cont'd)

System Description (cont'd)

Pump body assembly

The pump body assembly consists of the front oil pump, rear oil pump, and rear oil pump cover, and it has a built-in hydraulic circuit. The front oil pump is driven by the pressure plate component.

The rear oil pump is driven by the hypoid drive pinion gear.

The front and rear adopts trochoidal pumps. Moreover, the rear oil pump capacity is set 2.5% higher than the front oil pump capacity, and is designed for the speed difference caused by wear in the front tires, as well as for tight corner braking.

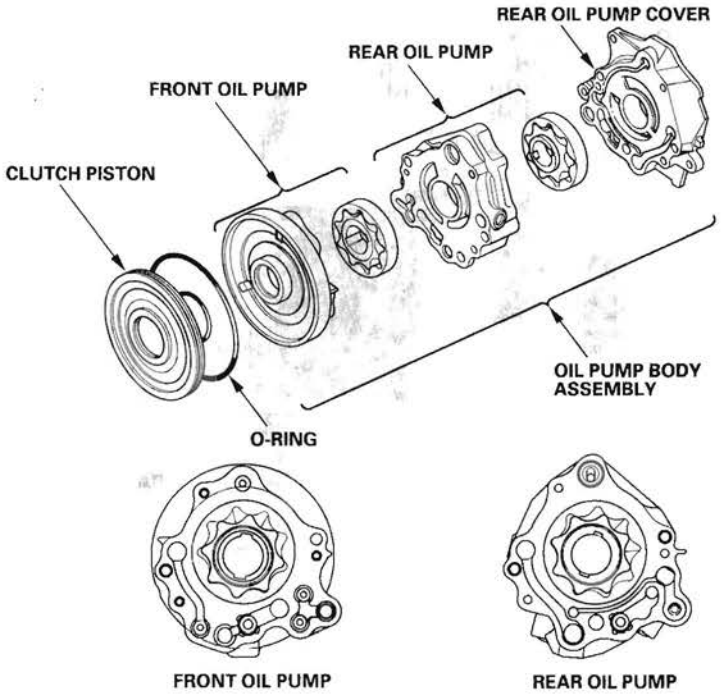

Differential carrier

This is composed of the hypoid drive pinion gear, hypoid ring gear, differential, and other parts.

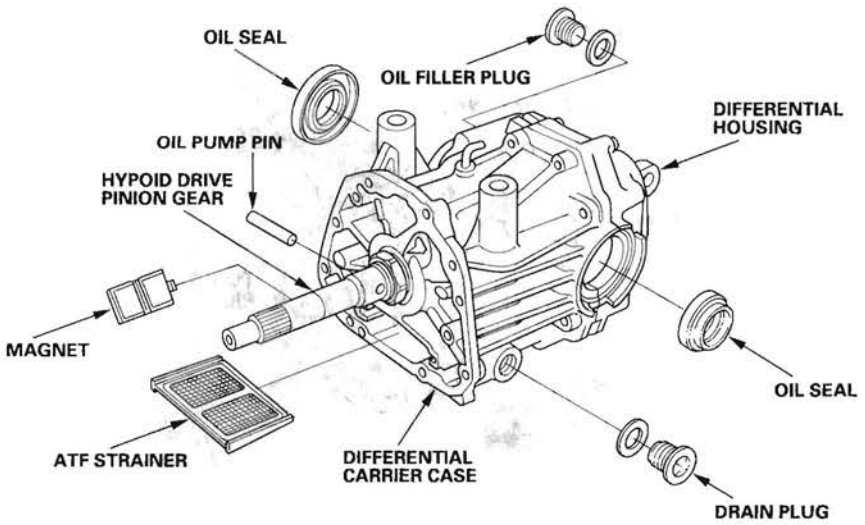

Power Transmission

During 2WD driving: DPS (dual pump system) not in operation
The front wheel driving force from the propeller shaft is transmitted to the clutch guide and the clutch plate. When DPS is not operating, the rear wheels follow the front wheels. From the rear driveshafts, the rear wheel operation is input to the differential, link gear, drive pinion gear, clutch hub, clutch disc, and power is not transmitted to the rear wheels.

During 4WD driving: DPS operation
The front wheel driving force from the propeller shaft is transmitted to the clutch guide and the clutch plate. When the one-way cam operates, the clutch plate and clutch disc become connected, and from the clutch hub, the driving force is transmitted to the pinion gear, ring gear, differential, rear driveshafts, and to the rear wheels.

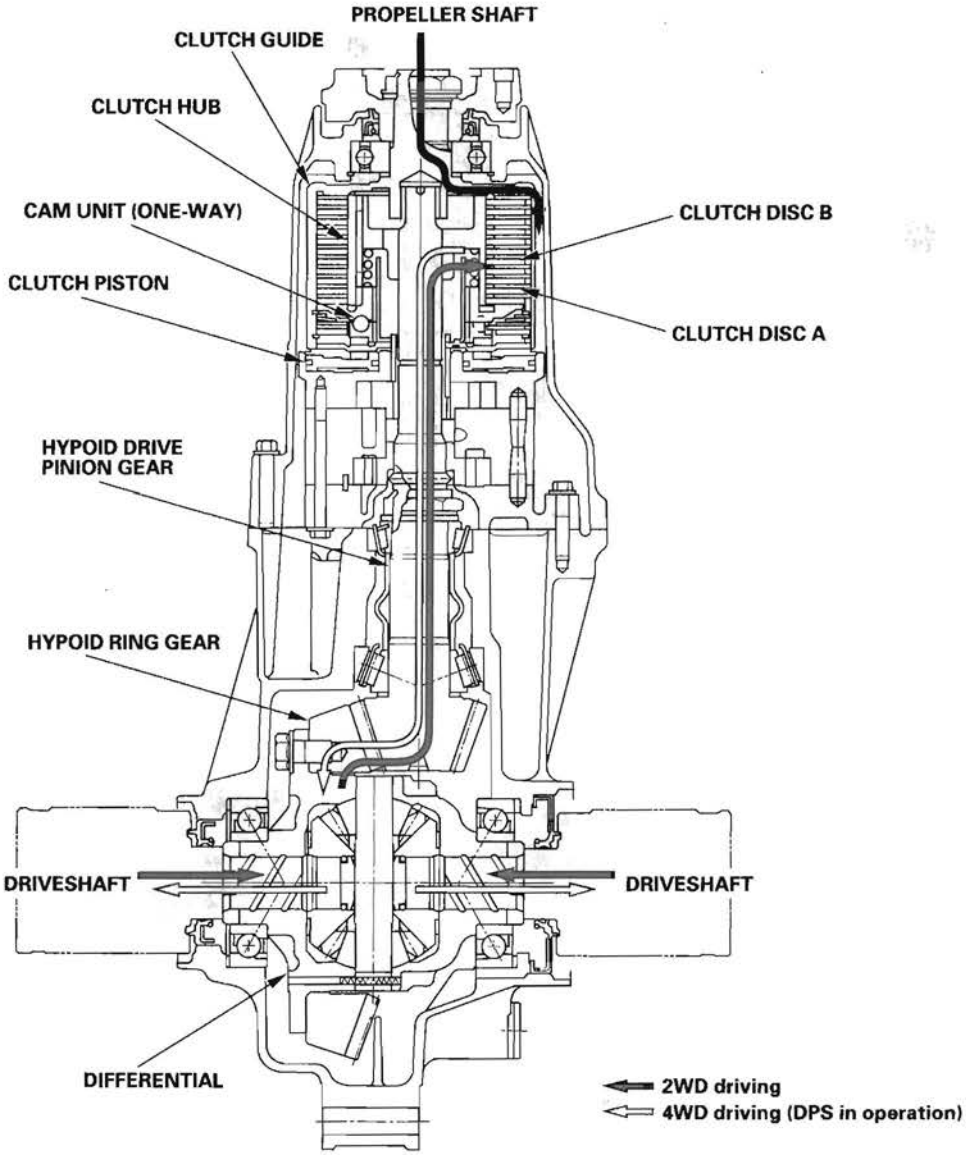

(cont'd)

System Description (cont'd)

Hydraulic Circuit

Construction of the hydraulic circuit
Built inside the oil pump assembly, the hydraulic circuit provides clutch assembly lubrication together with 4WD control. The hydraulic circuit consists of the front and rear oil pumps, the front valve and five check valves for hydraulic route switching, the choke section which is the hydraulic path to the clutch piston compartment, and the two orifices that controls the hydraulic pressure in the piston compartment.
It is equipped with a system protection function with a wax-pellet-style thermal switch and relief valve.

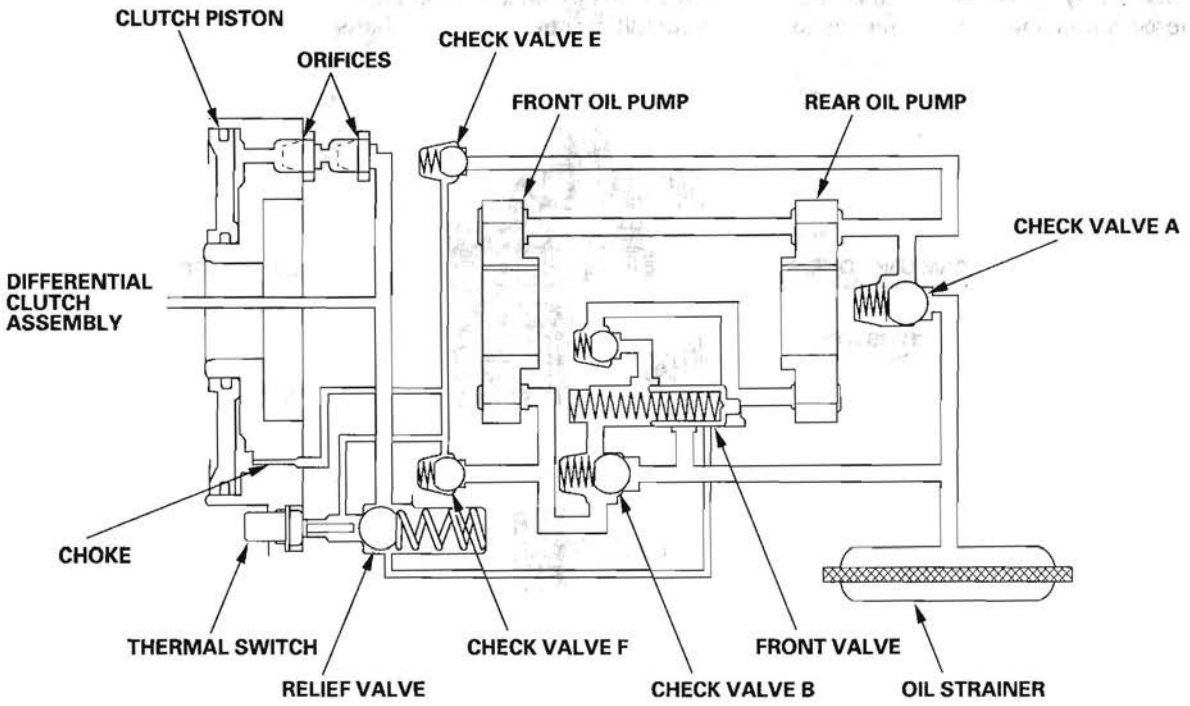

Part Name	Function
Front oil pump	Rotates at the front wheel speed, is driven via the propeller shaft, and produces hydraulic pressure.
Rear oil pump	Rotates at the rear wheel speed, is driven by the hypoid pinion gear, and produces hydraulic pressure.
Front valve	Bypasses the hydraulic pressure produced in the rear oil pump to the clutch assembly and the front oil pump. In normal 2WD driving, it operates during deceleration.
Check valves A, B	Secure hydraulic path from the oil strainer to the oil pump.
Check valve C	Bypasses the front oil pump discharging pressure to the rear oil pump when switching to 4WD.
Check valves E, F	Bypass the oil pump discharging pressure to the clutch piston compartment when switching to 4WD.
Choke	A hydraulic path that sends the hydraulic pressure from the oil pump to the clutch piston compartment.
Orifice	Adjusts the hydraulic pressure in the clutch piston compartment.
Relief valve	Operates when the hydraulic pressure to the clutch piston exceeds the set pressure in the relief valve, and releases hydraulic pressure to the piston compartment.
Thermal switch	Operates when the differential oil becomes hot, and forces the relief valve to open.

(cont'd)

System Description (cont'd)

Operation of the hydraulic pressure circuit

1. Forward starting and acceleration (4WD)
   -1 When the front wheel speed exceeds that of the rear wheel speed during forward starting and acceleration, and driving on slippery roads, the front oil pump speed exceeds that of the rear oil pump, producing hydraulic pressure.
   -2 The oil drawn in by the front oil pump from the oil strainer, passes through check valve B, and is drawn in or discharged.
   -3 Oil discharged from the front oil pump is drawn in by the rear oil pump. However, when the drawing capacity of the rear oil pump is exceeded, the excess oil passes check valve E, is pumped to the piston compartment, pushes the clutch piston to connect it to the clutch assembly, and transmits driving force to the rear wheels.
   -4 Oil in the piston compartment is adjusted by the two orifices. Oil that passes through the orifices lubricates and cools the clutch assembly interior and the hypoid pinion gear shaft.

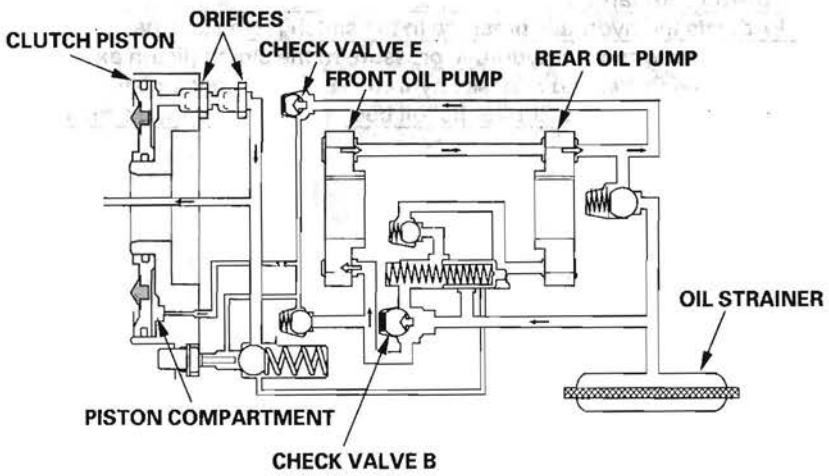

2. Forward driving at constant speed (2WD)
   -1 When driving forward at a constant velocity, the speeds of the front and rear wheels are equal, thus there is no speed difference between the front and rear oil pumps.
   -2 Oil discharged from the front oil pump is drawn in by the rear oil pump, and the oil discharged from the rear oil pump is again drawn in by the front oil pump. The oil circulates only between these two oil pumps. Since hydraulic pressure does not develop in the piston compartment, the clutch assembly is not connected, and rear wheel drive is not engaged.

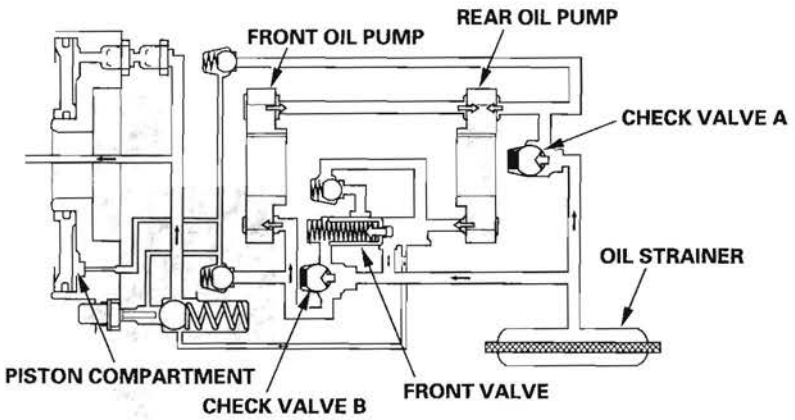

3. Forward deceleration (2WD)
   -1 During forward deceleration, the rear wheel speeds exceeds the front wheel speed because of braking characteristics, and the rear oil pump speed exceeds the front oil pump speed.
   -2 The oil drawn in by the rear oil pump from the oil strainer, passes through check valve A, and is drawn in or discharged.
   -3 Oil discharged from the rear oil pump is again drawn in by the rear oil pump, and is circulated. Thus, the piston compartment does not produce hydraulic pressure, so that the clutch assembly is not connected, and rear wheel drive is not engaged.

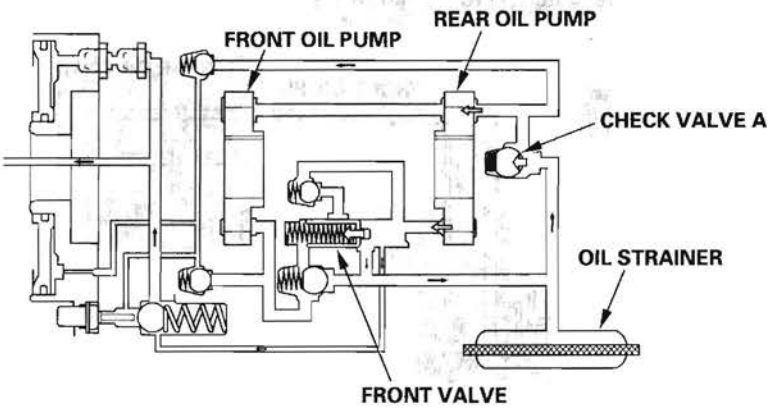

4. Reverse starting and deceleration (4WD)
   -1 When the front wheel speed exceeds that of the rear wheel speed during reverse starting and acceleration, and driving on slippery roads, the front oil pump speed exceeds that of the rear oil pump, thus producing hydraulic pressure.
   -2 During reverse driving, the oil pumps rotate in reverse. However, the oil drawn in by the front pump from the oil strainer passes the check valve A and rear oil pump, and then is drawn in and discharged by the front oil pump.
   -3 Oil discharged by the front oil pump but exceeding the drawing capacity of the rear oil pump passes through check valve F, travels to the piston compartment and is pressure-regulated in the two orifices.
   -4 Hydraulic pressure pushes the clutch piston to connect it with the clutch assembly interior, and via the propeller shaft, transmits driving force from the transmission to the rear wheels.

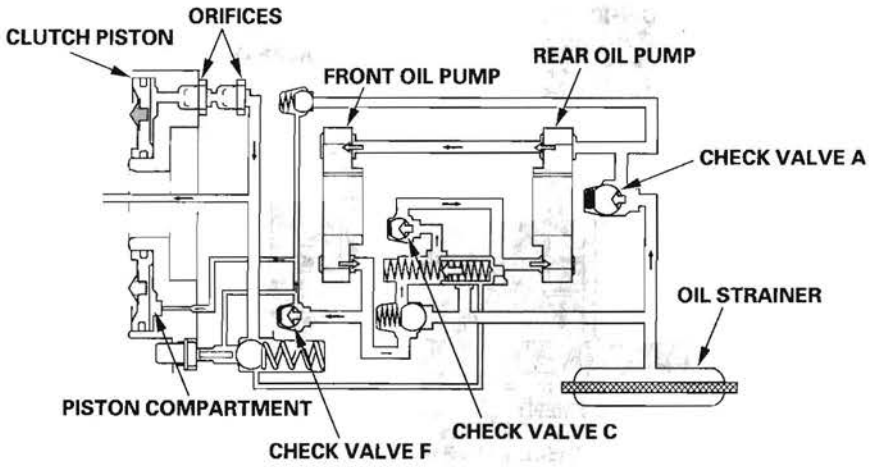

(cont'd)

System Description (cont'd)

5. Reverse driving at constant speed (2WD)
   -1 When reverse driving at constant velocity, the front and rear wheel speeds are equal, so that no speed difference exists between the front and rear oil pumps.
   -2 When reverse driving, the oil pumps rotate in reverse. However, the oil discharged from the front oil pump is drawn in by the rear oil pump. Likewise, the oil discharged by the rear oil pump is again drawn in by the front oil pump and is circulated.
   -3 The excess oil coming from the difference in capacity of the front and rear oil pumps, although in small amounts, passes through check valve E and goes to the piston compartment. However, the hydraulic pressure is low so that the clutch piston is not moved, and rear wheel drive is not engaged.

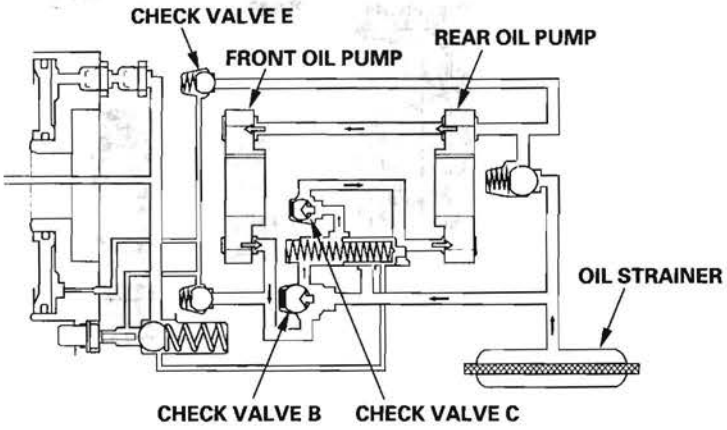

6. Reverse deceleration (4WD)
   -1 During reverse deceleration, the rear wheel speed exceeds the front wheel speed because of braking characteristics, thus the rear oil pump speed exceeds the front oil pump speed.
   -2 During reverse driving, the oil pump rotates in reverse, but the rear oil pump draws in oil from the oil strainer. The oil pump passes through check valves B and C, and is drawn in by the rear oil pump.
   -3 Excess oil from the oil discharged from the rear oil pump exceeds the drawing capacity in the front oil pump, passes through the check valve E, travels to the piston compartment, and is pressure-regulated at the two orifices.
   -4 Hydraulic pressure presses the clutch piston to connect with the clutch assembly interior, and transmits driving force from the transmission to the rear wheels via the propeller shaft.

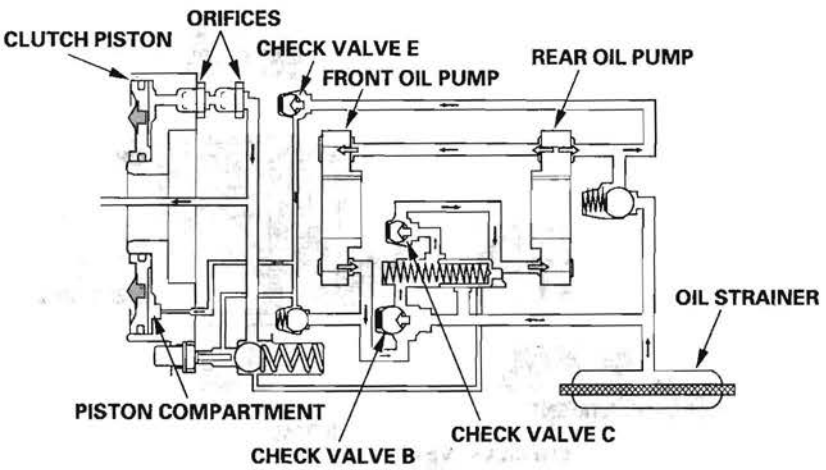

Emergency hydraulic pressure circuit operation

7. Thermal switch operation
   -1 During 4WD driving, adjusted oil acts on the relief valve and the clutch piston.
   -2 When the differential oil becomes abnormally hot, the thermal switch pushes the check valve, and the hydraulic pressure in the clutch piston is released, so that 4WD is disabled to protect the system.

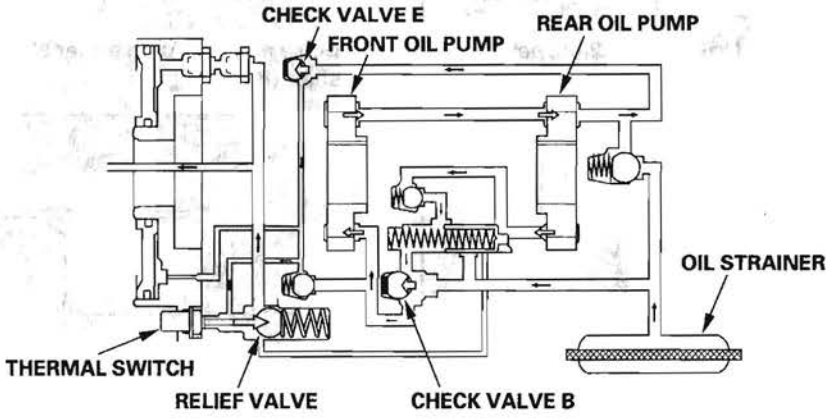

8. When the relief valve is in operation
   -1 During 4WD, adjusted oil acts on the relief valve and the clutch piston.
   -2 When hydraulic pressure exceeds the spring tension at the release spring, the check valve opens, the oil pressure in clutch piston is maintained, and excessive torque input to the rear wheel drive system is prevented.

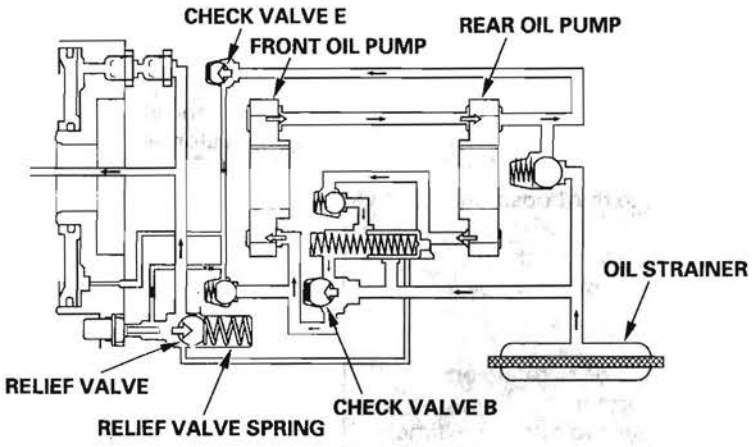

Dual Pump System Function Test

Starting and accelerating in forward gears (4WD mode)

NOTE: Do not test repeatedly or the fluid will overheat.

1. Lift up the vehicle so all four wheels are off the ground (see page 1-7).
2. Make a mark (A) on either No. 1 or No. 2 propeller shaft (B).

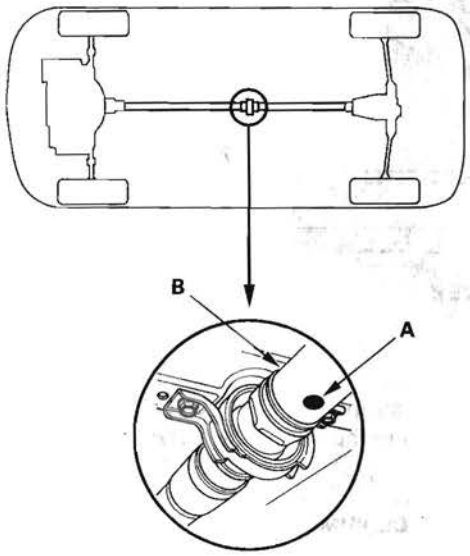

3. Start the engine, and let it run until it warms up (the radiator fan comes on at least twice).
4. With the engine at idle, shift to the 1 position.
5. Apply the parking brake firmly to lock the rear wheels, and look at the rotation of the propeller shaft.
   - If it takes more than 10 seconds to rotate one time, the 4WD system is normal.
   - If it takes less than 10 seconds to rotate one time, there is a problem in the 4WD system. Check the differential fluid first. If the differential fluid is normal, replace the torque control differential (TCD) case kit (front pump portion).

Starting and accelerating in reverse gear (4WD mode)

NOTE: Do not test repeatedly or the fluid will overheat.

1. Lift up the vehicle so all four wheels are off the ground (see page 1-7).
2. Make a mark (A) on either No. 1 or No. 2 propeller shaft (B).

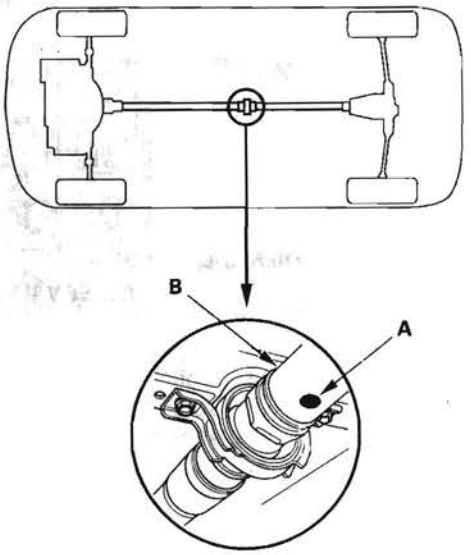

3. Start the engine, and let it run until it warms up (the radiator fan comes on at least twice).
4. With the engine at idle, shift to the R position.
5. Apply the parking brake firmly to lock the rear wheels, and measure the time it takes the propeller shaft to rotate 10 times.
   - If the measured time is more than 10 seconds, the 4WD system is normal.
   - If the time is less than 10 seconds, there is a problem in the 4WD system. Check the differential fluid. If the differential fluid is normal, replace the torque control differential (TCD) case kit (front pump portion).

Decelerating in forward gears (2WD mode)

1. Block the front wheels (A), raise the left rear wheel, and support it with a safety stand (B) as shown.

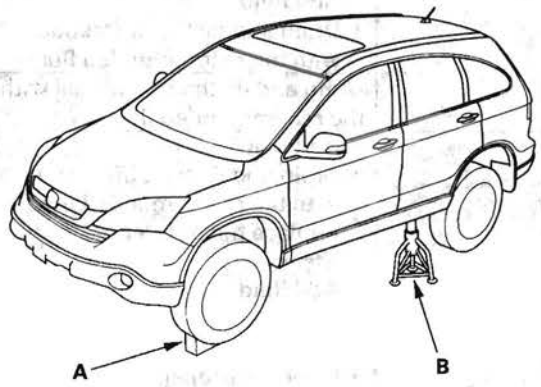

2. Hold the tire, and turn it counterclockwise continuously for more than one rotation.

   - If the rotation of the wheel does not gradually feel heavy while rotating, the 2WD system when decelerating in a forward gear is normal.
   - If the rotation of the wheel gradually feels heavy, there is a problem in the system. Check the differential fluid. If the fluid is normal, replace the torque control differential (TCD) case kit.

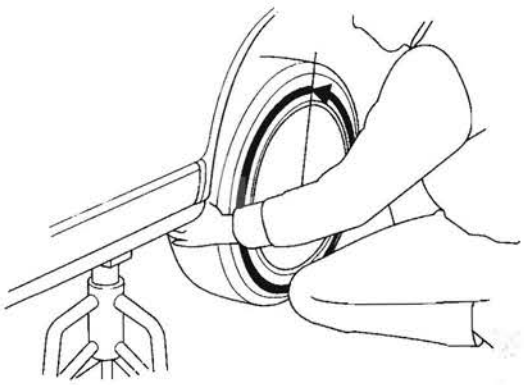

Decelerating in reverse gears (4WD mode)

1. Block the front wheels (A), raise the left rear wheel, and support it with a safety stand (B) as shown.

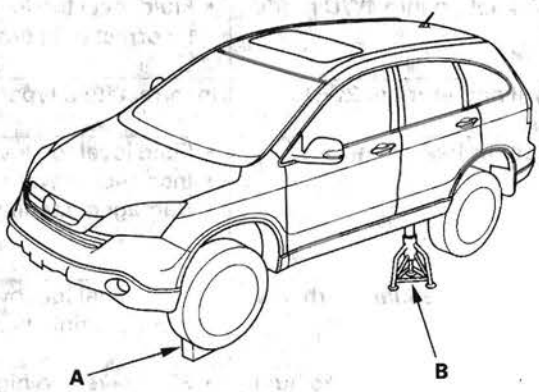

2. Hold the tire, and turn it clockwise continuously for more than one rotation.

   - If the wheel does not rotate, the 4WD system when decelerating in reverse gear is normal.
   - If the wheel rotates, there is a problem in the system. Check the differential fluid. If the fluid is normal, replace the torque control differential (TCD) case kit.

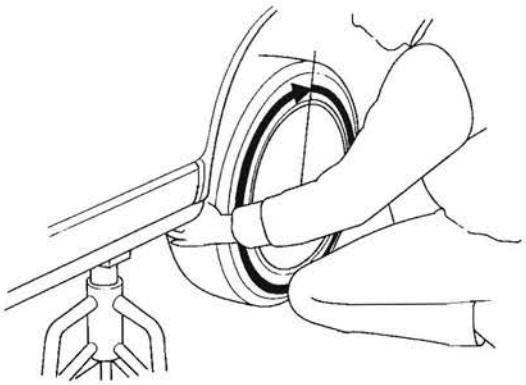

Symptom Troubleshooting Index

Most problems in the unit are to be diagnosed by identifying noises from the gears or bearings.
Be careful during diagnosis not to confuse differential noises with those from other drivetrain components.

Symptom	Probable Cause	Remedy
Will not go into 4WD mode	• Fluid level too low • Incorrect fluid type	• Add fluid • Drain and fill the differential with the recommended fluid
Will not return to 2WD mode	Incorrect fluid type	Drain and fill the differential with the recommended fluid
Gear or bearing noises	• Fluid level too low • Incorrect or worn out fluid • Damaged or chipped gears	• Add fluid • Drain and fill the differential with the recommended fluid • Replace the differential carrier assembly
Rear differential overheats	• Fluid level too low • Incorrect fluid type	• Add fluid • Drain and fill the differential with the recommended fluid
Rear differential leaks fluid	• Fluid level too high • Clogged breather hose • Worn or damaged oil seal • Damaged sealing washer • Loose mounting bolts or inadequate sealing	• Lower to proper level • Clean or replace • Replace the oil seal • Replace the sealing washer • Recheck torque or apply sealant
Rear differential screeches, whines, moans, or squeaks	• Fluid level too low • Incorrect or worn out fluid • Incorrect tire rolling circumference • Damaged pump	• Add fluid • Drain and fill the differential with the recommended fluid • Adjust tire pressure or replace tires • Replace torque control differential (TCD) front pump

Rear Differential Fluid Inspection and Replacement

1. With the vehicle on level ground, inspect the differential fluid with the ignition switch turned to LOCK (0).

2. Use solvent and a brush to wash off any oil and dirt from the differential fluid inspection oil filler plug.

3. Remove the oil filler plug (A) and the sealing washer (B), then check the condition of the fluid, and make sure the fluid is at the proper level (C).

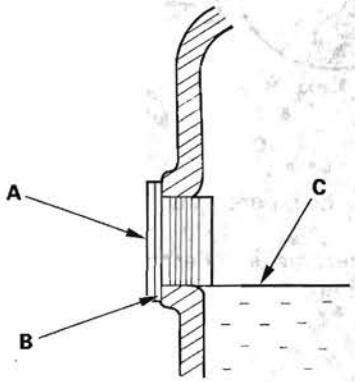

4. The fluid level must be up to the fill hole. If it is below the hole, add the differential fluid until it runs out, then reinstall the oil filler plug with a new sealing washer.

5. If the fluid is dirty, remove the drain plug (A) and the sealing washer (B) then drain the fluid.

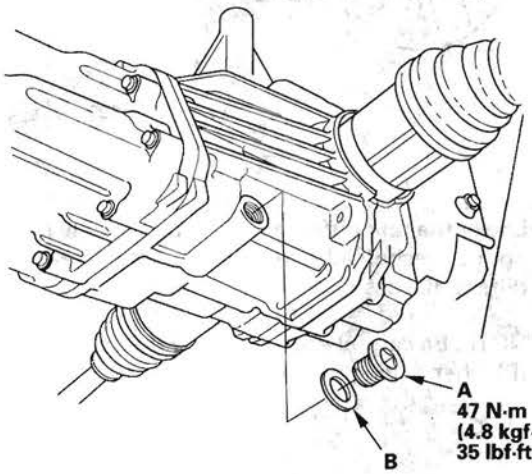

6. Clean the drain plug, then reinstall it with a new sealing washer, and refill the differential with the differential fluid to the proper level.

   NOTE: If you disassemble the differential, check the fluid level again after the 4WD system check is finished. Add fluid if necessary.

   Fluid Capacity
   1.2 L (1.3 US qt) at fluid change
   1.4 L (1.5 US qt) at overhaul

   Recommended fluid:
   Honda Dual Pump Fluid (P/N 08200-9002)

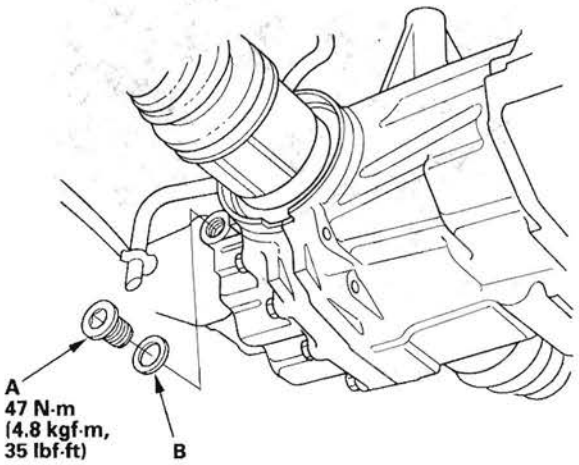

7. Reinstall the oil filler plug (A) with a new sealing washer (B).

Differential Removal

1. Raise the vehicle, and make sure it is securely supported (see page 1-7).
2. Drain the differential fluid (see page 15-21).
3. Mark the propeller shaft (A) and the companion flange of the rear differential assembly (B) so they can be reinstalled in their original positions (C).

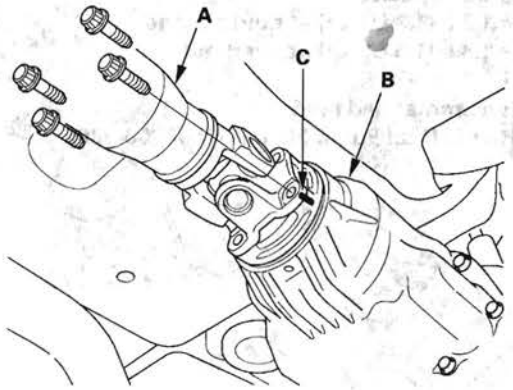

4. Remove the propeller shaft from the rear differential assembly.
5. Remove the breather tube (A) from the clip (B).

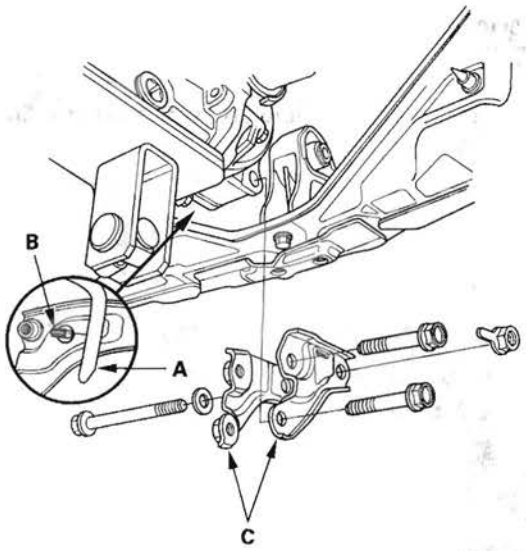

6. Place a transmission jack under the rear differential assembly, then remove the right and left rear differential mount bracket (C).
7. Remove the breather tubes (A) from the clip (B).

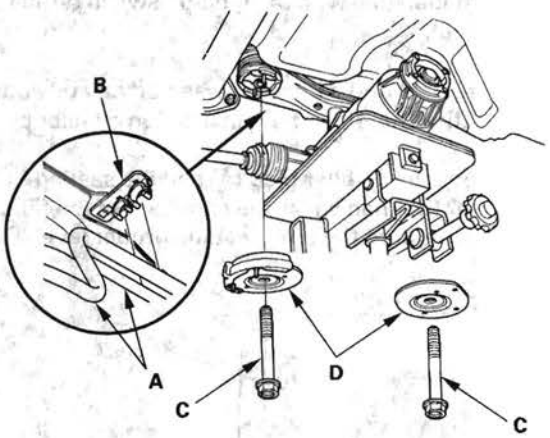

8. Remove the mounting bolts (C) and the plates (D).
9. Disconnect the breather tube (A) from the breather tube fitting.

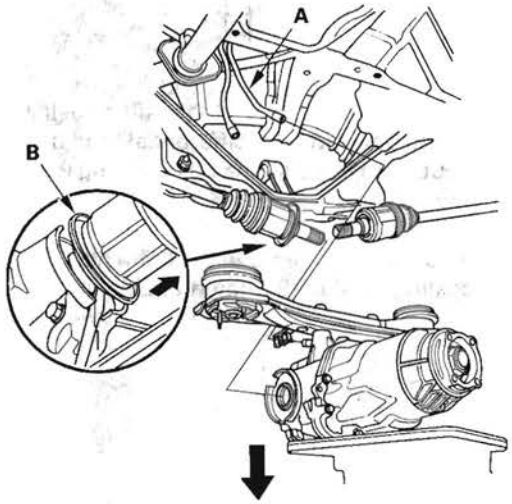

10. Lower the rear differential assembly while pulling both driveshaft inboard joints out of the rear differential assembly.

    NOTE: Be careful not to damage the driveshaft ring (B) when prying out the driveshaft inboard joints.

11. Remove the rear differential mount assembly (A) from the rear differential assembly (B).

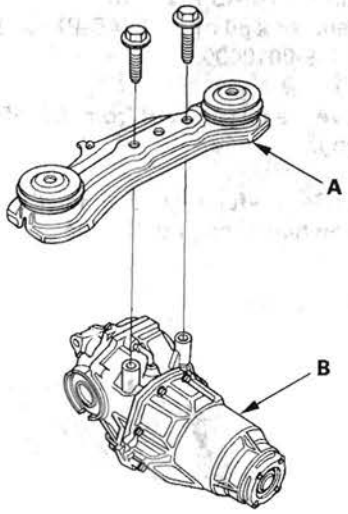

Differential Housing Assembly Removal and Installation

1. Remove the six mounting bolts in a crisscross pattern in several steps, then remove the differential housing assembly (A) and the oil seals (B).

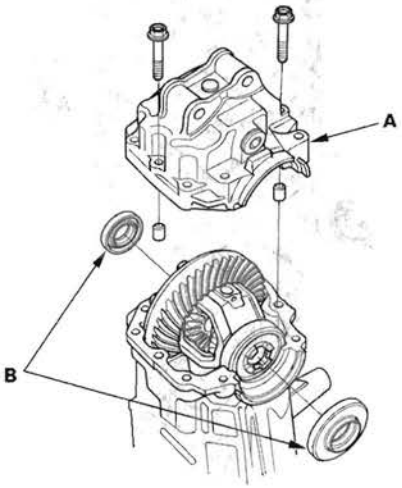

2. Remove the dirt and oil from the sealing surfaces. Apply liquid gasket (P/N 08718-0001) to the sealing surface. Make sure you seal the entire circumference of the bolt holes to prevent oil leakage.

NOTE:
- You must assemble the housings within 5 minutes after applying the liquid gasket. If not, the sealing surface must be cleaned, and the liquid gasket reapplied.
- Allow it to cure at least 30 minutes after assembly before filling the differential with fluid.

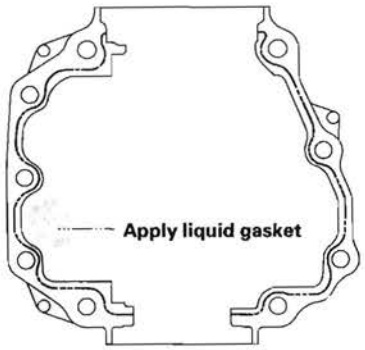

(cont'd)

Differential Housing Assembly Removal and Installation (cont'd)

3. Install the differential housing assembly (A), then torque the six mounting bolts (B) in a crisscross pattern in several steps.

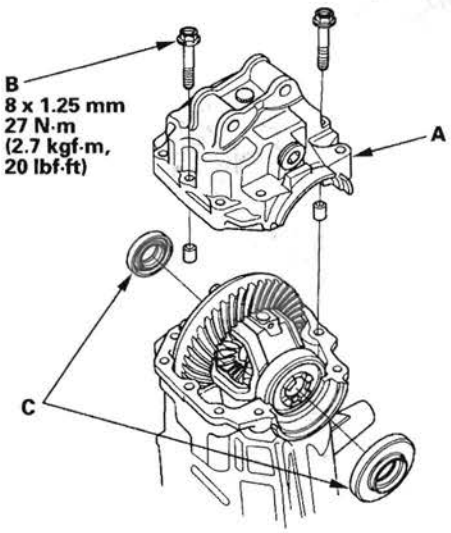

4. Install the oil seals (C).

Oil Seal Replacement

Special Tools Required
- Attachment, 52 x 55 mm 07NAD-P200100
- Oil seal driver 07JAD-PL90100
- Attachment, 78 x 80 mm 07NAD-PX40100
- Driver 07749-0010000

1. Remove the oil seals (A) from the differential housing.

   NOTE: Be careful not to damage the differential carrier while prying out the seals.

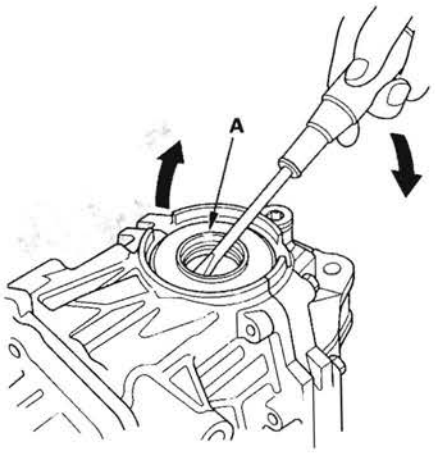

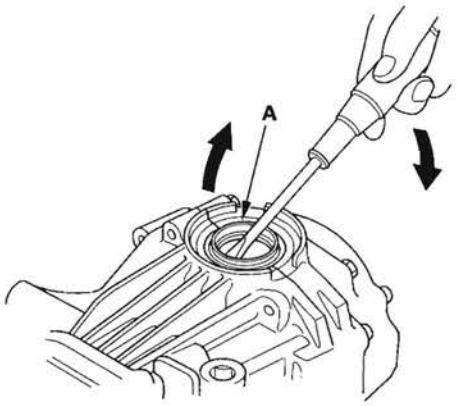

2. Install the right side oil seal (A) squarely using the driver (B) and attachment (C). Installation depth of the oil seal is 9 mm (0.35 in.) below the machined edge of the differential carrier assembly. Be careful not to damage the lip of the oil seals.

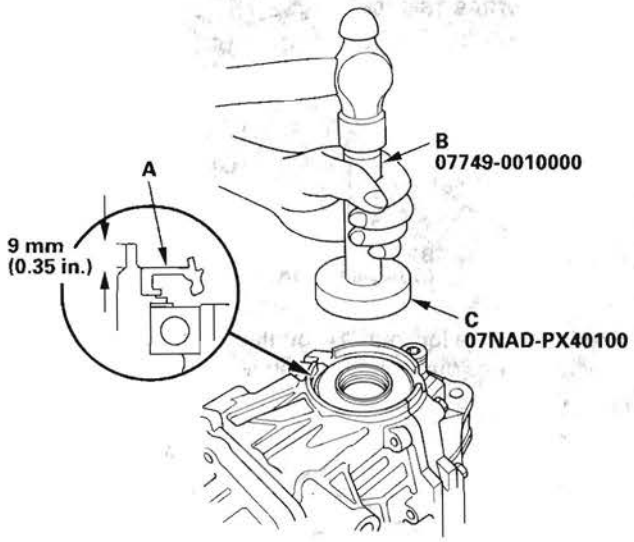

3. Install the left side oil seal (A) squarely and flush with the machined edge of the differential carrier assembly using the driver (B) and attachment (C). Be careful not to damage the lip of the oil seal.

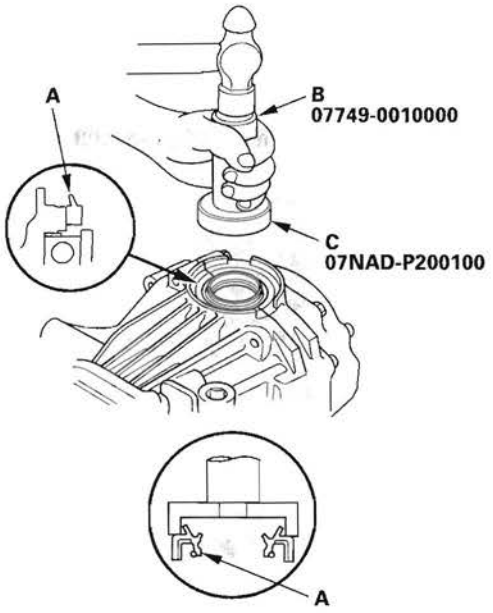

4. Remove the companion flange (see step 2 on page 15-26).

5. Remove the oil seal (A) from the torque control differential case (B).

   NOTE: Be careful not to damage the shaft or case while prying out the seal.

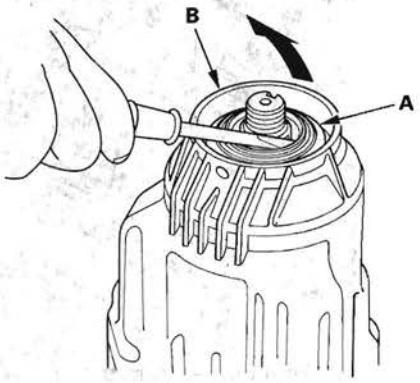

6. Install the oil seal (A) squarely using the oil seal driver (B). Be careful not to damage the lip of the oil seal.

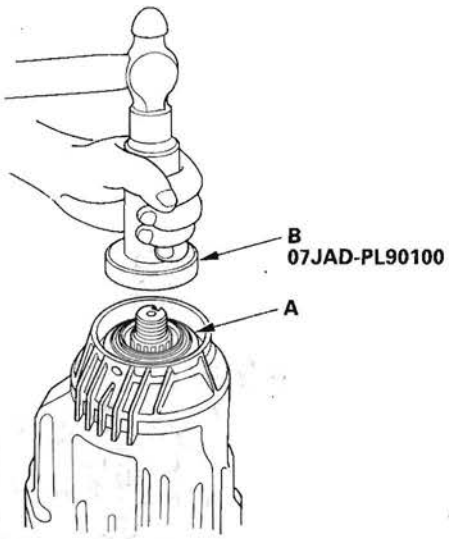

7. Install the companion flange (see step 10 on page 15-32).

Differential Disassembly

Special Tools Required
- Holder handle 07JAB-001020A
- Companion flange holder 07RAB-TB4010B

1. Remove the drain plug (A) and the oil filler plug (B) with sealing washers (C).

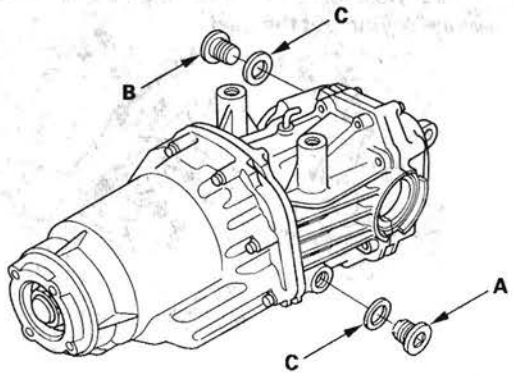

2. Raise the locknut tab (A) from the groove of the clutch guide, making sure the tab completely clears the groove to prevent damaging the clutch guide.

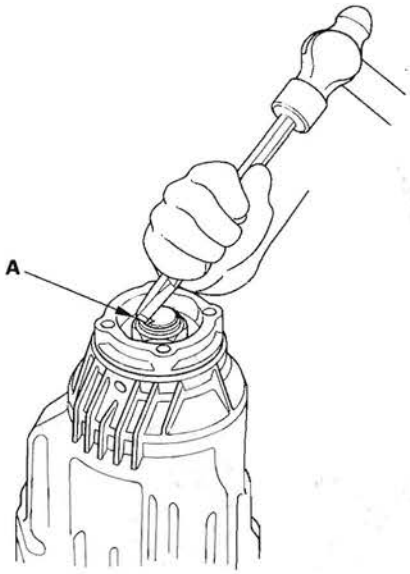

3. Install the companion flange holder (A) and holder handle (B) on the companion flange.

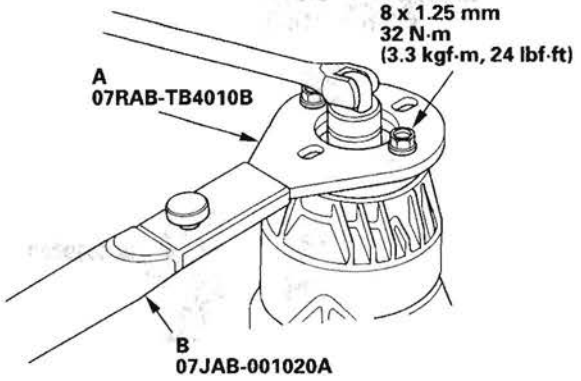

4. Loosen the locknut (A) counterclockwise so its tab (B) comes out from the groove (C) in the clutch guide.

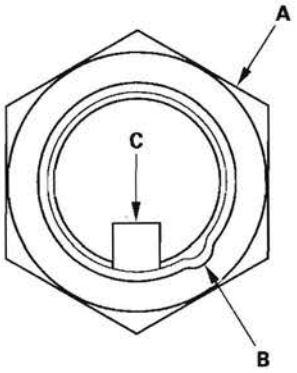

Torque: 147 N·m (15.0 kgf·m, 108 lbf·ft)

5. Tighten the locknut (A) until its tab (B) aligns with the groove (C).

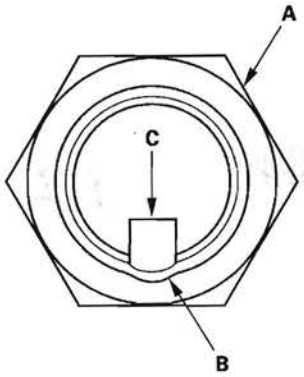

6. Remove any dirt from inside the groove in the clutch guide, then loosen the locknut.

7. Remove the locknut (A), the disc spring washer (B), the back-up ring (C), the O-ring (D), and the companion flange (E).

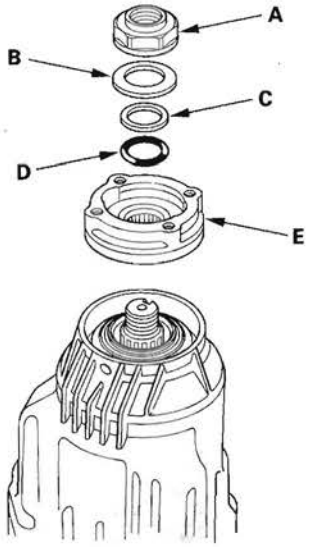

8. Remove the eight mounting bolts (A) in a crisscross pattern in several steps, then remove the torque control differential case (B) and the dowel pins (C).

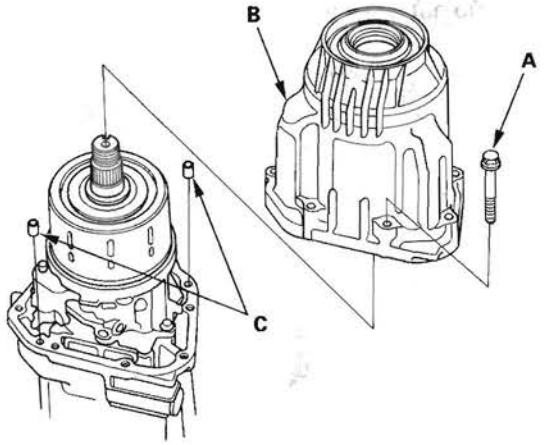

9. Remove the shim (A) and the clutch assembly (B).

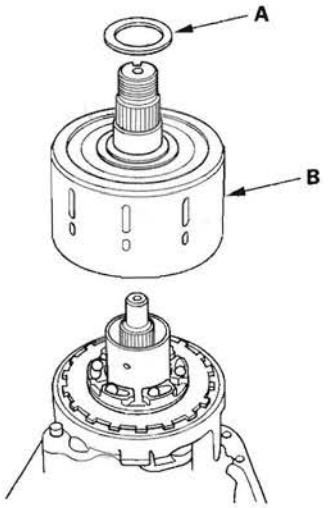

(cont'd)

Differential Disassembly (cont'd)

10. Remove the six steel balls (A), the base cam (B), the thrust needle bearings (C), and the pressure plate (D).

    NOTE: Do not lose the steel balls.

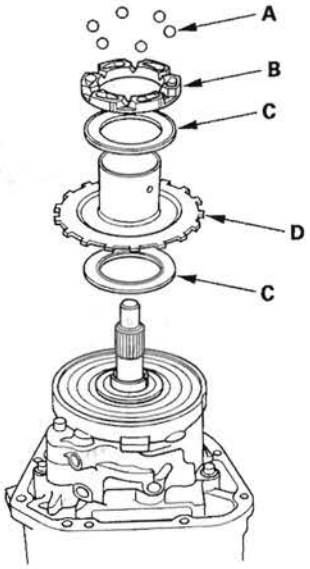

11. Remove the oil pump driveshaft.

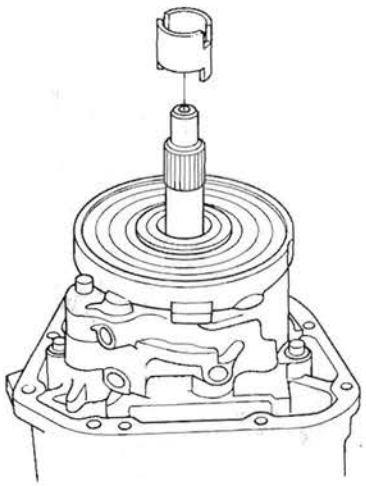

12. Remove the oil pump body assembly (A), the oil pump pin (B), the dowel pins (C), the magnet (D), and the ATF strainer (E).

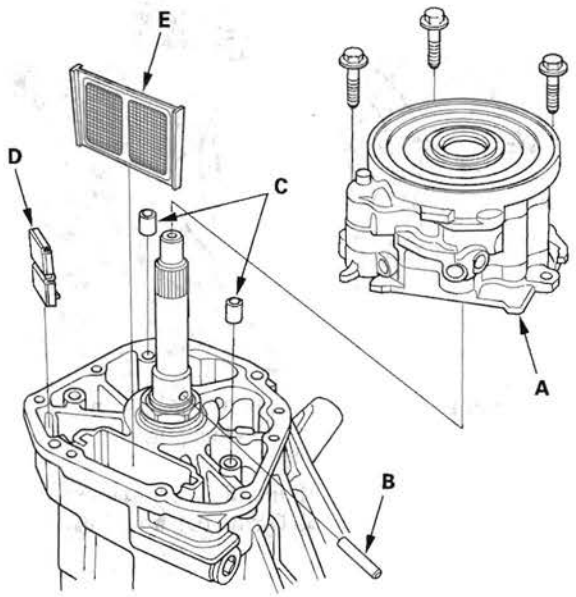

Differential Reassembly

Exploded View

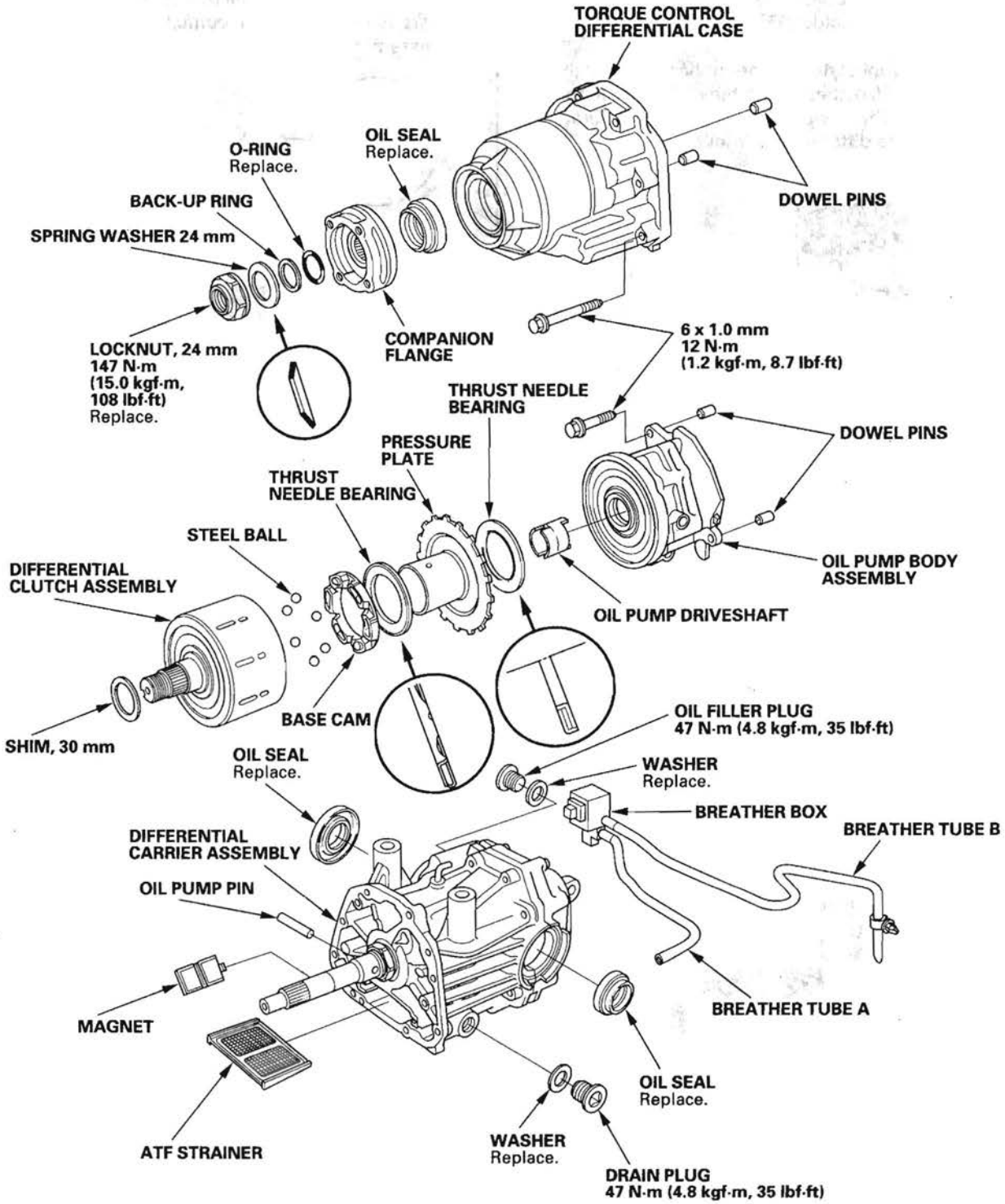

(cont'd)

Differential Reassembly (cont'd)

Special Tools Required
- Holder handle 07JAB-001020A
- Companion flange holder 07RAB-TB4010B

1. Apply differential fluid to the rubber pinion of the ATF strainer (A), then install the ATF strainer, the magnet (B), the dowel pins (C), and the oil pump pin (D), in the differential carrier assembly.

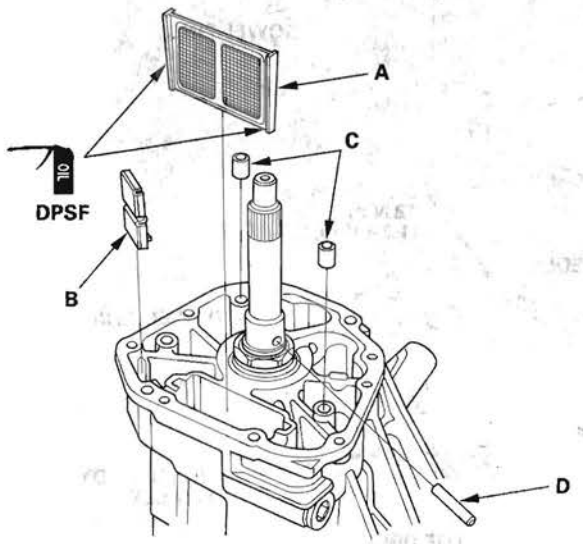

2. Align the grooves (A) of the rear oil pump with the oil pump pin (B), then install the oil pump body assembly (C) on the differential carrier assembly.

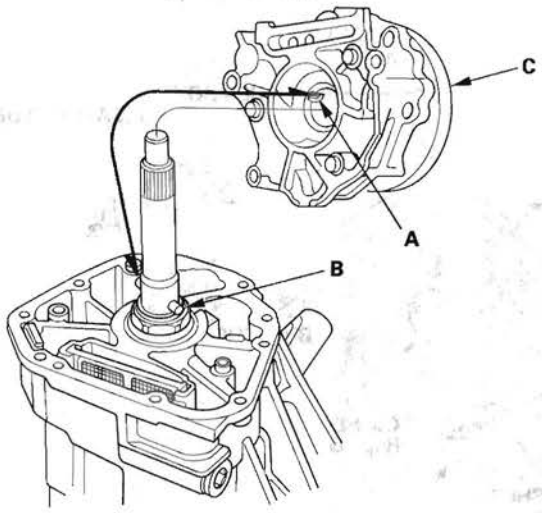

3. Install the oil pump driveshaft (A) by aligning the projection (B) of the oil pump driveshaft with the groove of the front oil pump in the oil pump body assembly.

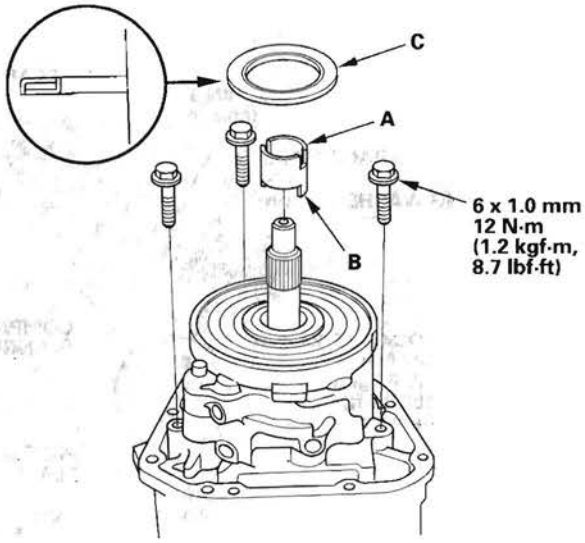

4. Install the thrust needle bearing (C).

5. Install the six steel balls (A), base cam (B), thrust needle bearing (C), and the pressure plate (D) on the clutch assembly (E).

   NOTE: Align the tabs (F) of the pressure plate with the grooves (G) of the clutch assembly.

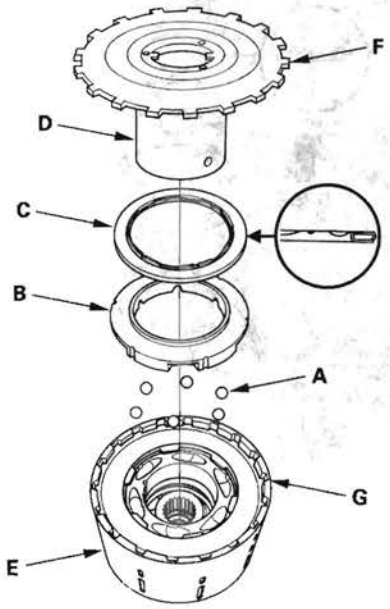

6. Make a mark (A) on the outside of the clutch assembly (B) that corresponds to the position of the tab (C) of the pressure plate (D) as shown. Make a mark (E) on the outside of the oil pump assembly (F) that corresponds to the position of the groove (G) in the oil pump driveshaft (H) as shown.

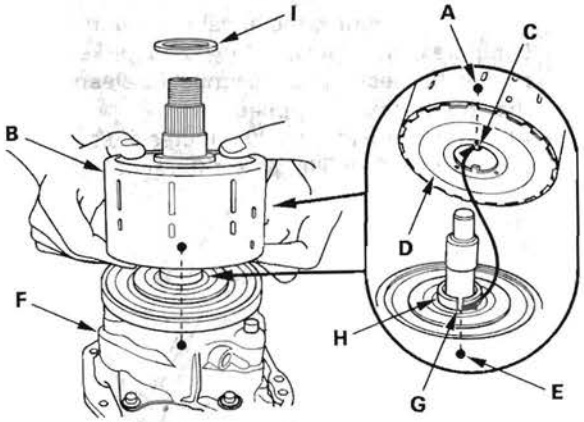

7. Support the pressure plate and clutch assembly by hand so that they do not misalign. With the marks aligned, install the clutch assembly to the oil pump assembly. Install the 30 mm shim (I).

8. Make sure that the clutch assembly and pressure plate are correctly installed. If the clutch assembly can be pushed down as in the figure, proceed to step 9. If not, return to step 5.

   NOTE: If incorrectly installed, the clutch assembly may be damaged when excessive force is applied.

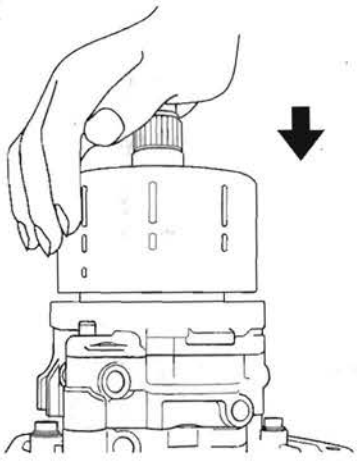

(cont'd)

Differential Reassembly (cont'd)

9. Remove the dirt and oil from the sealing surfaces. Apply liquid gasket (P/N 08718-0001) to the sealing surface. Make sure you seal the entire circumference of the bolt holes to prevent fluid leakage.

   NOTE:
   - You must assemble the housings within 5 minutes after applying the liquid gasket. If you do not, the sealing surface must be cleaned, and the liquid gasket reapplied.
   - Allow it to cure at least 30 minutes after assembly before filling the differential with fluid.

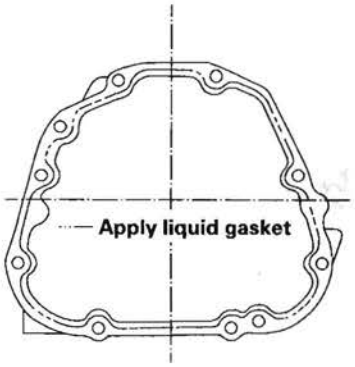

10. Install the 6 x 1.0 mm dowel pins (A) and the torque control differential case (B). Torque the eight mounting bolts in a crisscross pattern in several steps.

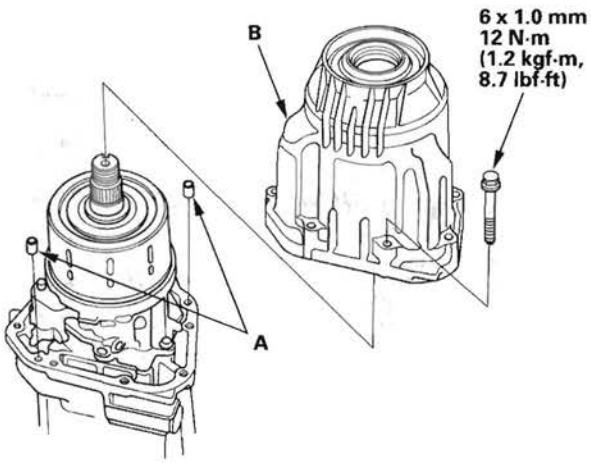

11. Install the companion flange (A), the O-ring (B), the back-up ring (C), the disc spring washer (D), and the locknut (E).

    NOTE: Apply differential fluid to the O-ring.

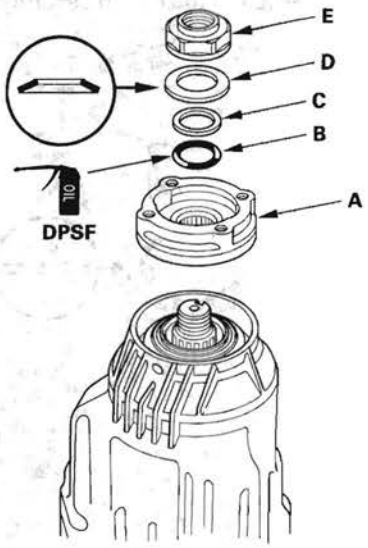

12. Install the companion flange holder (A) and holder handle (B) to the companion flange, then tighten the new locknut to the specified torque.

    Torque: 147 N·m (15.0 kgf·m, 108 lbf·ft)

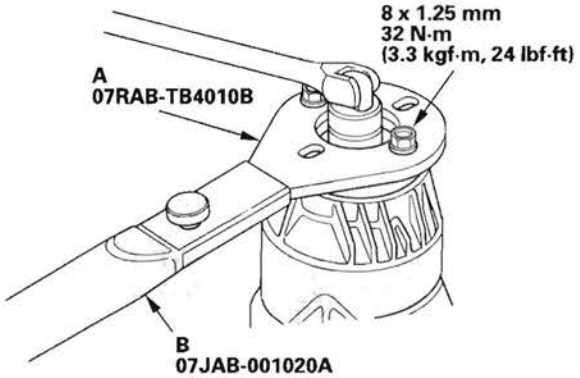

13. Stake the locknut tab (A) into the groove in the clutch guide.

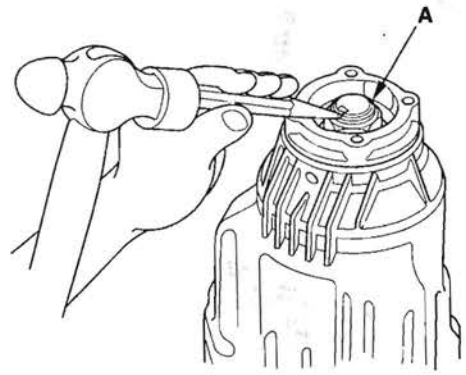

14. Install the drain plug (A) and the oil filler plug (B) with new washers (C).

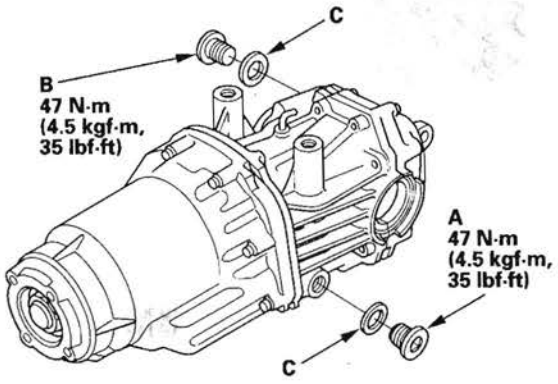

Differential Mount Replacement

Exploded View

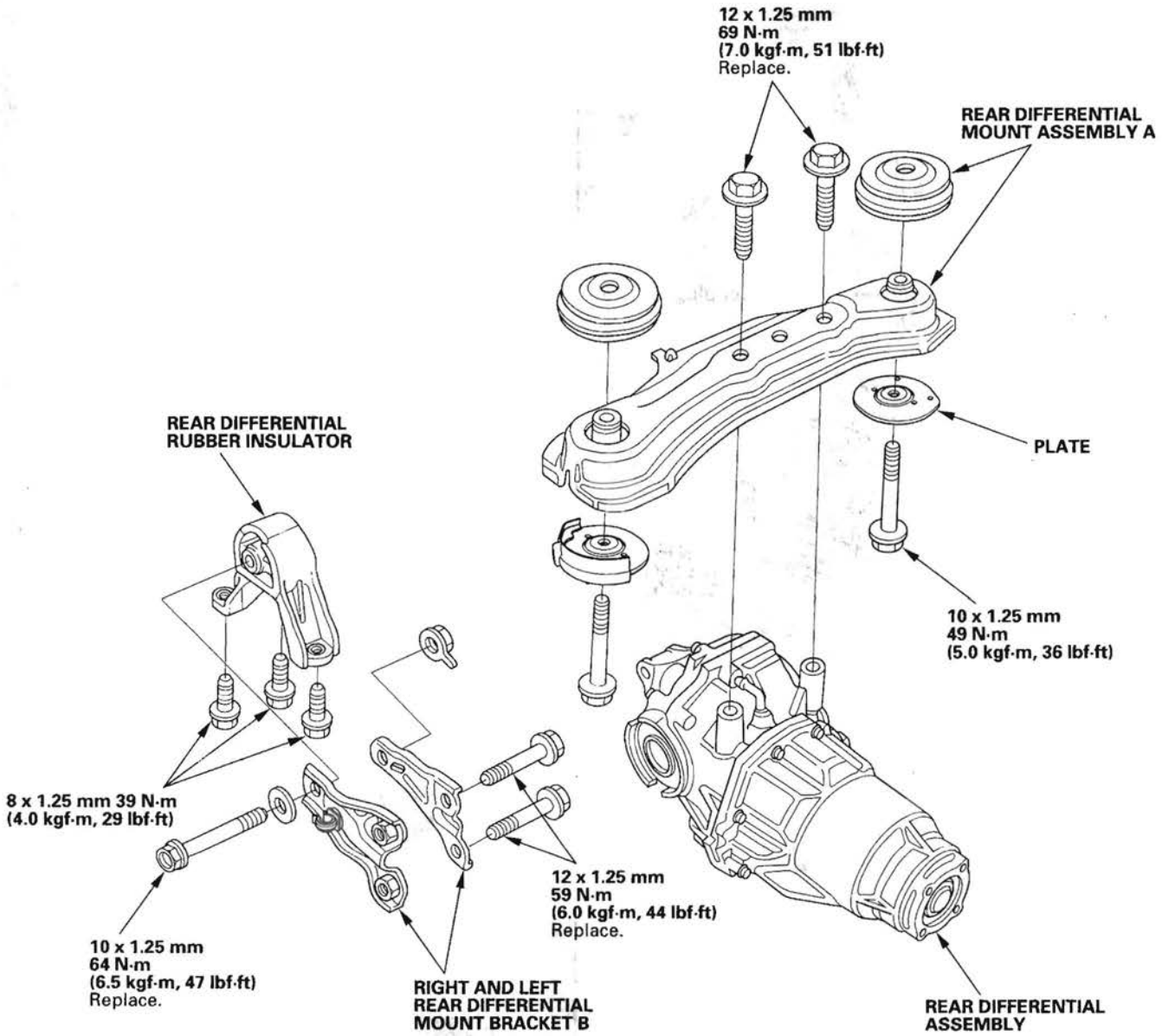

Differential Installation

1. Install rear differential mount assembly A to the rear differential assembly (B).

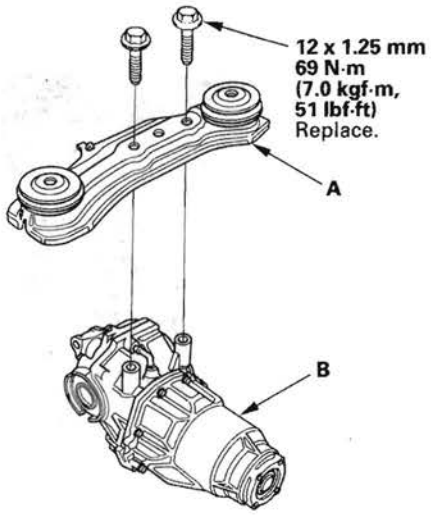

2. Jack up the rear differential.

3. Install the new set rings (A) onto the driveshafts, then insert the driveshafts into the rear differential.

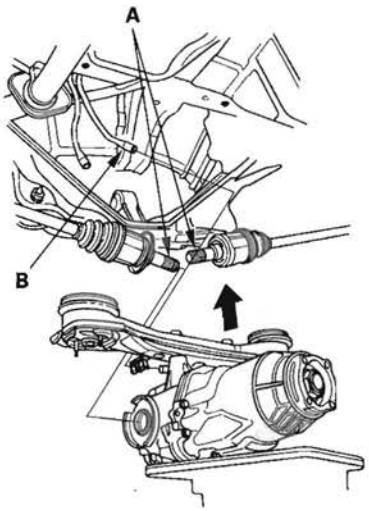

4. Lift the rear differential up into position, then push on both driveshafts to lock the set rings into place. Connect the breather tube (B).

5. Align the tab (A) of the rubber mount (B) with the hole (C) of the plates (D), then install the plates and torque the rear differential mount assembly mounting bolts (E).

   NOTE: The rubber heat insulator (F) is installed only in the right side.

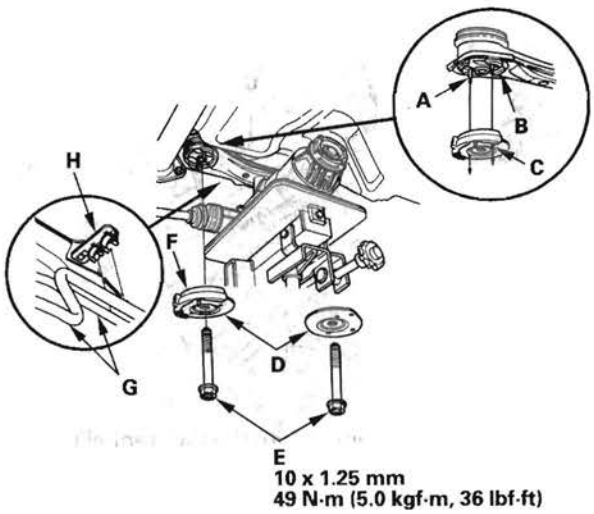

6. Install the breather tubes (G) to the clips (H).

7. Install the right and left rear differential mount brackets B (A), then torque the bolts (B).

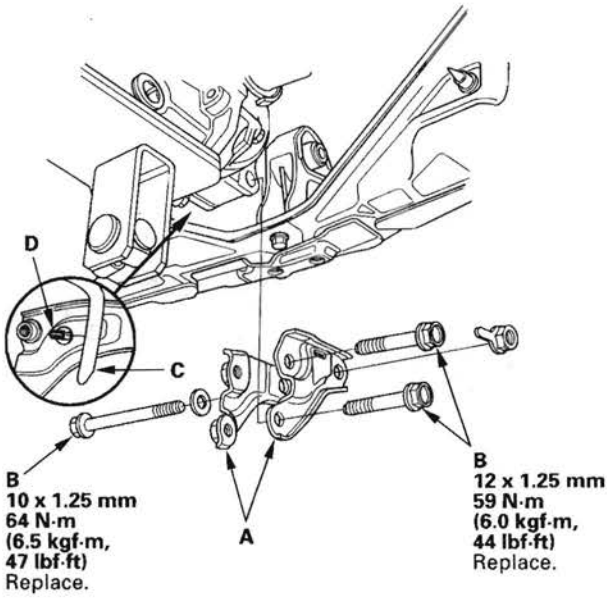

8. Install the breather tube (C) to the clip (D).

(cont'd)

Differential Installation (cont'd)

9. Install the No. 2 propeller shaft (A) onto the rear differential (B) by aligning the reference marks (C) made during removal. Make sure you use new mounting bolts (D).

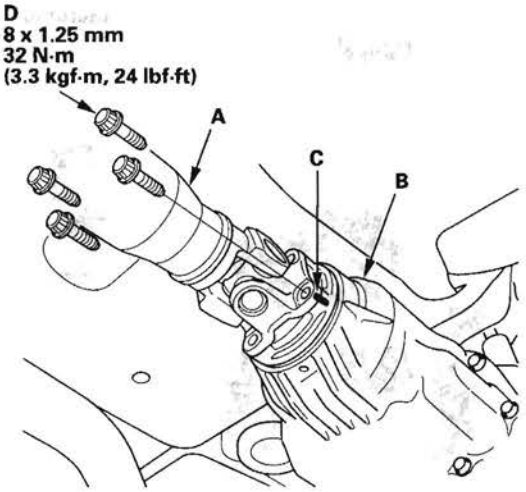

10. Fill the rear differential with the differential fluid to the proper level (see page 15-21).

Driveline/Axle

Special Tools 16-2
Component Location Index 16-3
Driveshaft Inspection 16-4
Front Driveshaft Removal 16-4
Boot Band Removal 16-6
Front Driveshaft Disassembly 16-7
Boot Band Installation 16-10
Front Driveshaft Reassembly 16-13
Front Driveshaft Installation 16-18
Intermediate Shaft Removal 16-20
Intermediate Shaft Disassembly 16-20
Intermediate Shaft Reassembly 16-22
Intermediate Shaft Installation 16-25
Rear Driveshaft Removal 16-26
Rear Driveshaft Disassembly 16-27
Rear Driveshaft Reassembly 16-31
Rear Driveshaft Installation 16-38
Propeller Shaft Inspection 16-39
Propeller Shaft Removal 16-40
Propeller Shaft Installation 16-41

Special Tools

Ref. No.	Tool Number	Description	Qty
①	07JAD-PL90100	Oil Seal Driver	1
②	07NAD-P200100	Attachment, 52 x 55 mm	1
③	07NAF-SR30101	Half Shaft Base	1
④	07XAC-001020A	Threaded Adapter, 24 x 1.5 mm	1
⑤	07XAC-001030A	Threaded Adapter, 26 x 1.5 mm	1
⑥	07746-0030400	Attachment, 35 mm I.D.	1
⑦	07749-0010000	Driver	1
⑧	07946-MB00000	Inner Handle, 30 mm	1
⑨	07947-SB00100	Oil Seal Driver	1

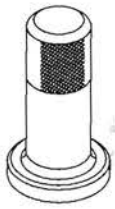

①

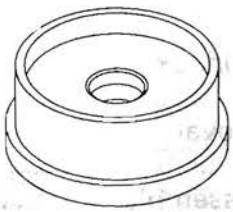

②



③

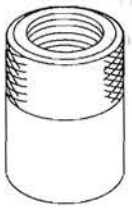

④, ⑤



⑥

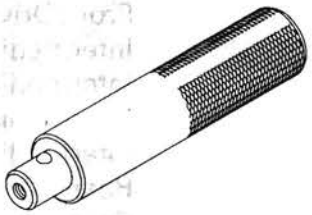

⑦

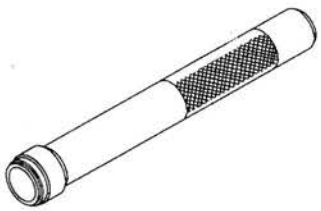

⑧

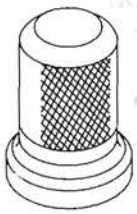

⑨

Component Location Index

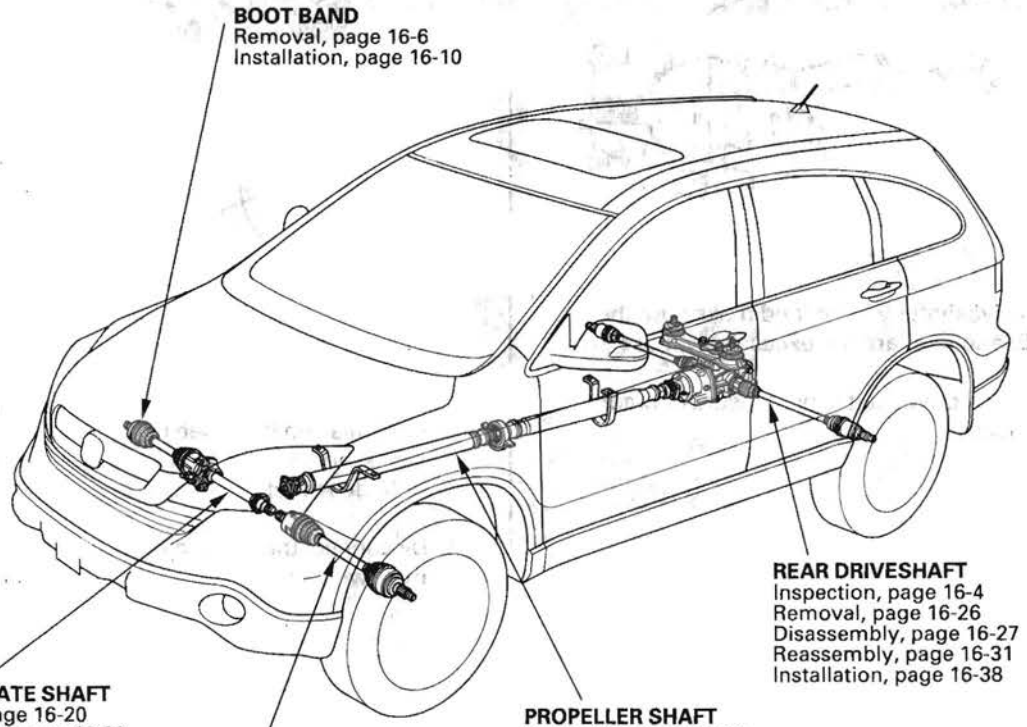

Driveshaft Inspection

1. Check the inboard boot (A) and the outboard boot (B) on the driveshaft (C) for cracks, damage, leaking grease, and loose boot bands (D). If any damage is found, replace the boot and boot bands.

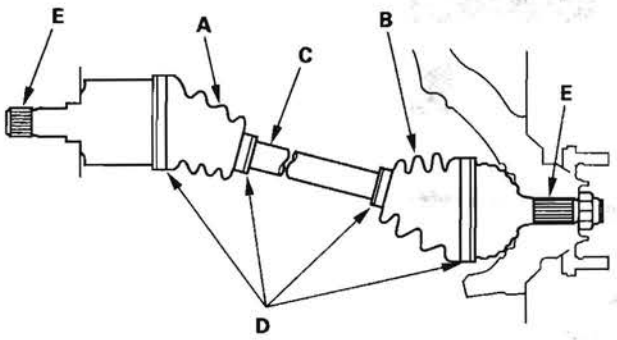

2. Turn the driveshaft by hand, and make sure the splines (E) and joint are not excessively loose.

3. Make sure the driveshaft is not twisted or cracked; if it is, replace it.

Front Driveshaft Removal

1. Raise the vehicle on a lift, and remove the front wheels (see page 1-7).

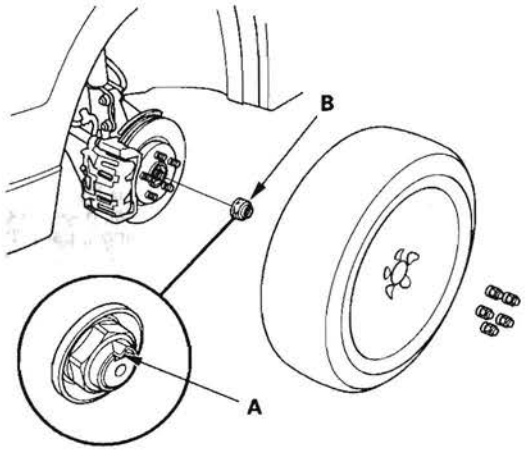

2. Lift up the locking tab (A) on the spindle nut (B), then remove the nut.

3. If you need to remove the left driveshaft, drain the transmission fluid (see page 14-239). It is not necessary to drain the transmission fluid when the right driveshaft is removed.

4. Disconnect the driveshaft outboard joint from the front wheel hub using a plastic hammer.

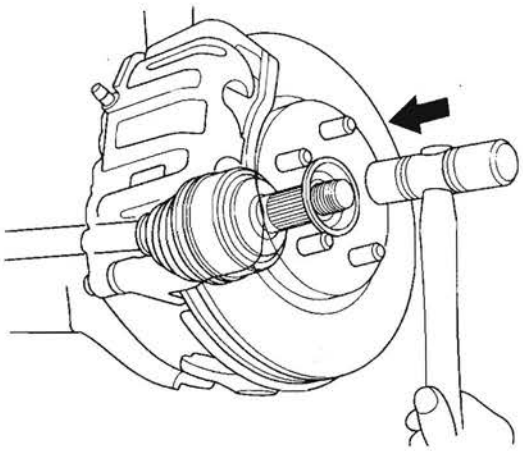

5. Remove the nuts and bolt, then separate the lower arm with a prybar.

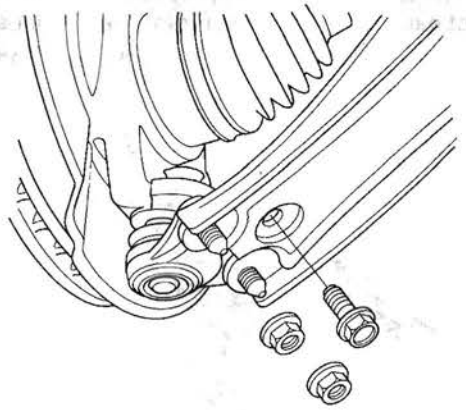

6. Pull the knuckle outward, and remove the driveshaft outboard joint from the front wheel hub.

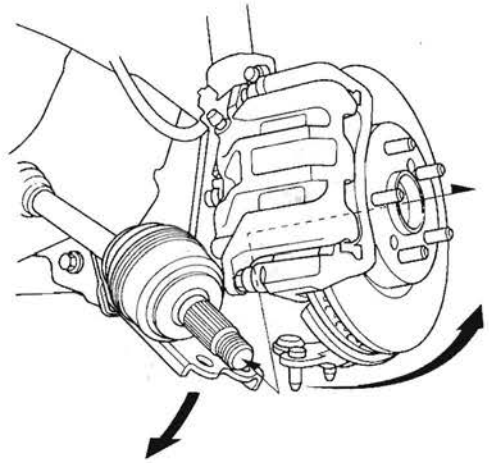

7. Left driveshaft: Pry the inboard joint (A) from the differential case with a prybar. Pull the driveshaft straight out to avoid damaging the oil seal.
Right driveshaft: Drive the inboard joint (A) off of the intermediate shaft with a drift and hammer. Remove the driveshaft as an assembly. Do not pull on the driveshaft (B), because the inboard joint may come apart.

Left driveshaft

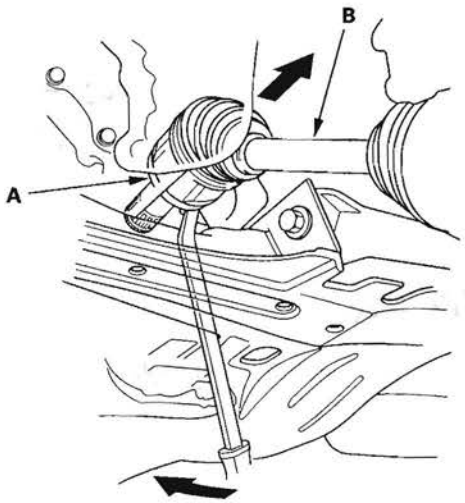

Right driveshaft

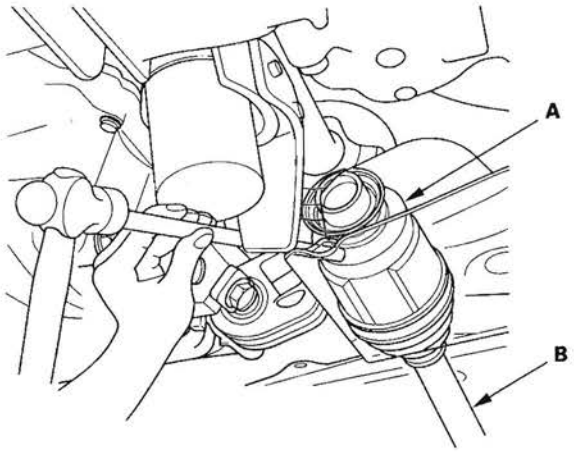

Boot Band Removal

NOTE: When removing the boot bands, be careful not to damage the boot.

Welded Type

1. Cut the boot band (A), then remove the boot band.

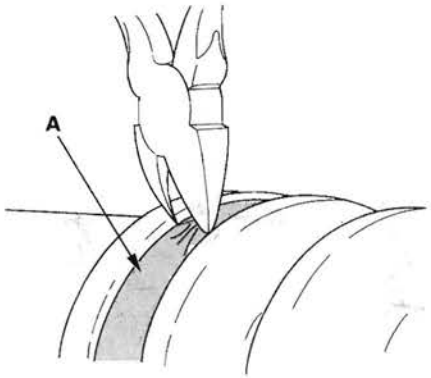

Dpuble Loop Type

1. Lift up the band end (A), then push it into the clip (B), then remove the boot band.

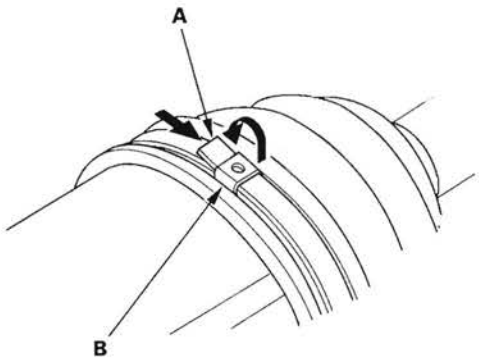

Low Profile Type

1. Pinch the boot band using commercially available boot band pliers (A), then remove the boot band.

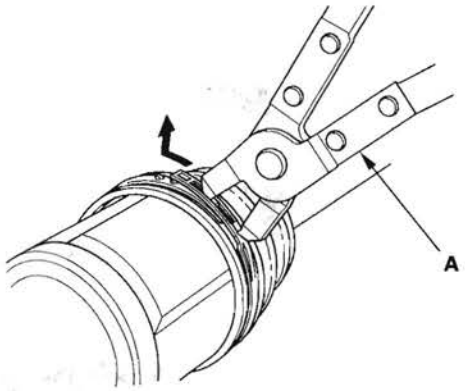

Ear Clamp Type

1. Lift up the three tabs (A) with a screwdriver, then remove the boot band.

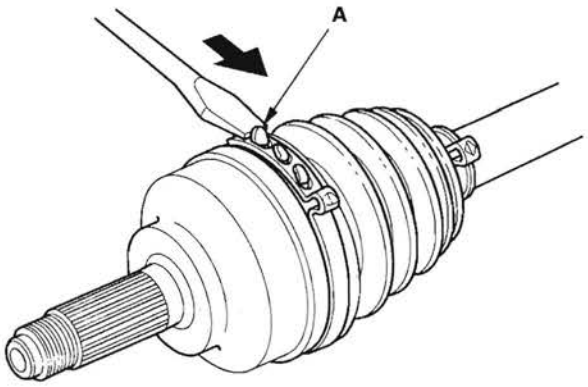

Front Driveshaft Disassembly

Special Tools Required
- Threaded adapter, 26 x 1.5 mm 07XAC-001030A
- Slide hammer, 5/8"-18 UNF, commercially available

Inboard Joint Side

1. Remove the set ring (A) from the inboard joint.

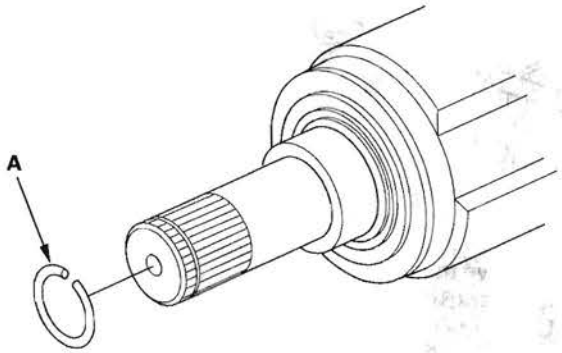

2. Remove the boot bands. Be careful not to damage the boot (see page 16-6).

3. Make marks (A) on each roller (B) and inboard joint (C) to identify the locations of rollers and grooves in the inboard joint. Then remove the inboard joint on the a shop towel (D). Be careful not to drop the rollers when separating them from the inboard joint.

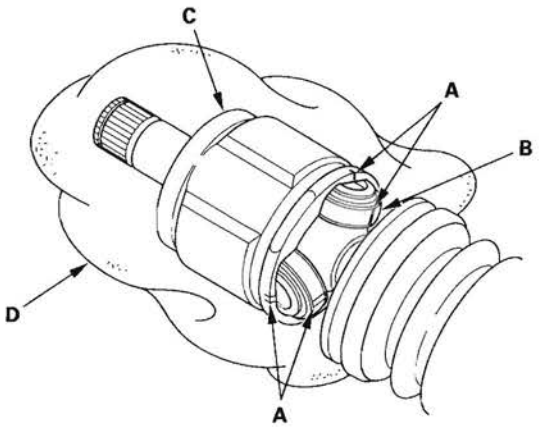

4. Make marks (A) on the rollers (B) and spider (C) to identify the locations of the rollers on the spider, then remove the rollers.

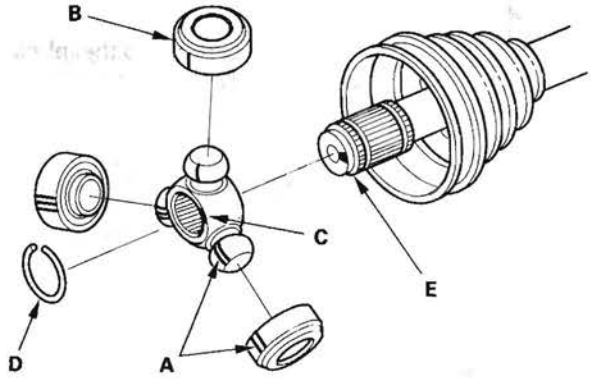

5. Remove the circlip (D).

6. Mark the spider and driveshaft (E) to identify the position of the spider on the shaft.

7. Remove the spider.

8. Wrap the splines on the driveshaft with vinyl tape (A) to prevent damage to the boot.

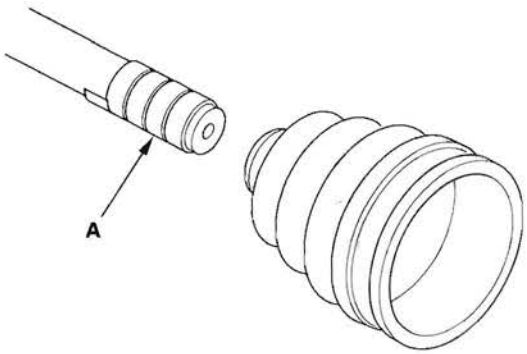

9. Remove the inboard boot. Be careful not to damage the boot.

10. Remove the vinyl tape.

(cont'd)

Front Driveshaft Disassembly (cont'd)

Outboard Joint Side

1. Remove the boot bands. Be careful not to damage the boot (see page 16-6).

2. Slide the outboard boot (A) partially to the inboard joint side. Be careful not to damage the boot.

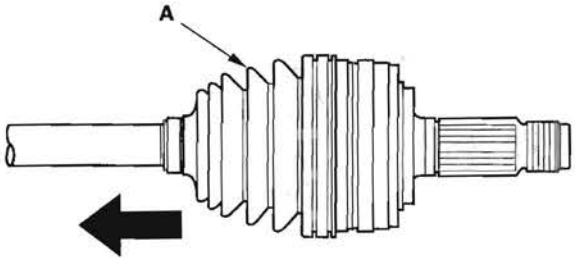

3. Wipe off the grease to expose the driveshaft and the outboard joint inner race.

4. Make a mark (A) on the driveshaft (B) at the same level as the outboard joint rim (C).

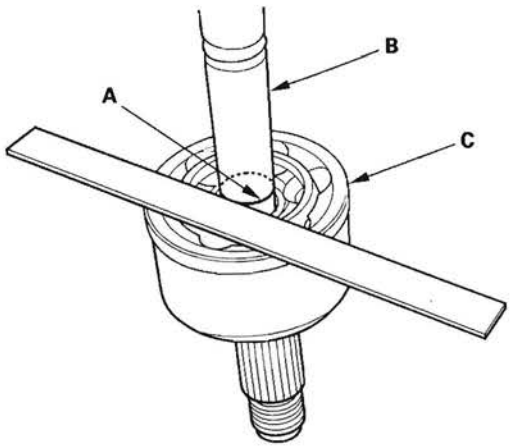

5. Securely clamp the driveshaft in a bench vise with a shop towel.

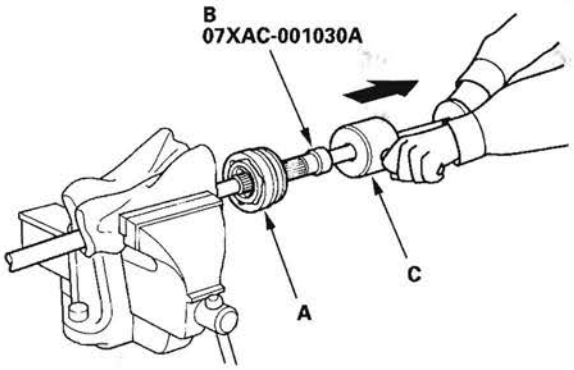

6. Remove the outboard joint (A) using the threaded adapter (B) and a commercially available 5/8"-18 UNF slide hammer (C).

7. Remove the driveshaft from the bench vise.

8. Remove the stop ring (A) from the driveshaft.

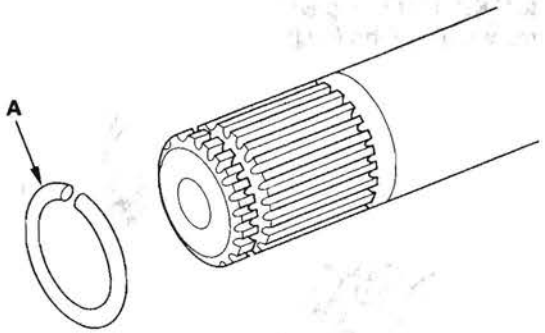

9. Wrap the splines on the driveshaft with vinyl tape (A) to prevent damaging the boot.

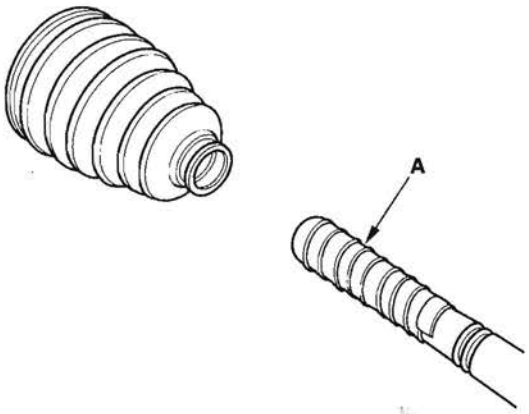

10. Remove the outboard boot. Be careful not to damage the boot.

11. Remove the vinyl tape.

Boot Band Installation

Special Tools Required
- Boot band tool, KD-3191 or equivalent, commercially available
- Boot band pliers, Kent-Moore J-35910 or equivalent, commercially available

Double Loop Type

1. Fit the boot ends onto the driveshaft and the inboard joint, then install the new double loop band (A) onto the boot.

   NOTE: Pass the end of the new double loop band through the clip (B) twice in the direction toward the front of the vehicle.

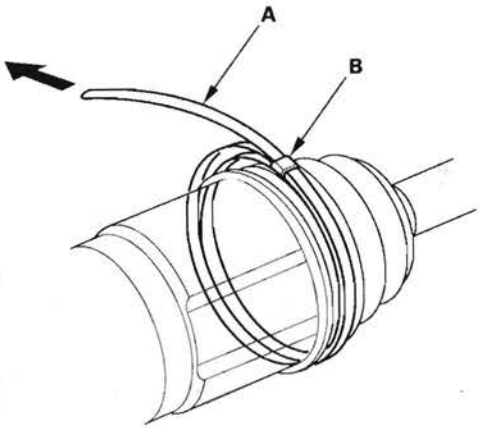

2. Pull up the slack in the band by hand.
3. Mark a position (A) on the band 10—14 mm (0.4—0.6 in.) from the clip (B).

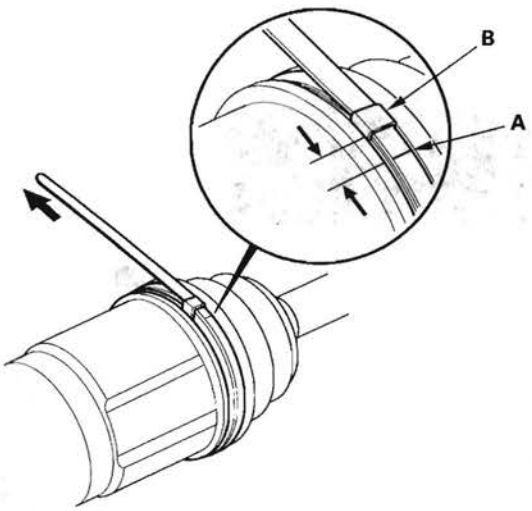

4. Thread the free end of the band through the nose section of the commercially available boot band tool KD-3191 or equivalent (A), and into the slot on the winding mandrel (B).

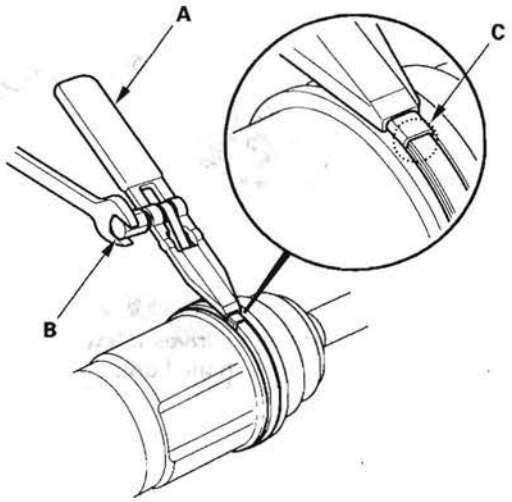

5. Place a wrench on the winding mandrel of the boot band tool, and tighten the band until the marked spot (C) on the band meets the edge of the clip.
6. Lift up the boot band tool to bend the free end of the band 90 degrees to the clip. Center-punch the clip, then fold over the remaining tail onto the clip.

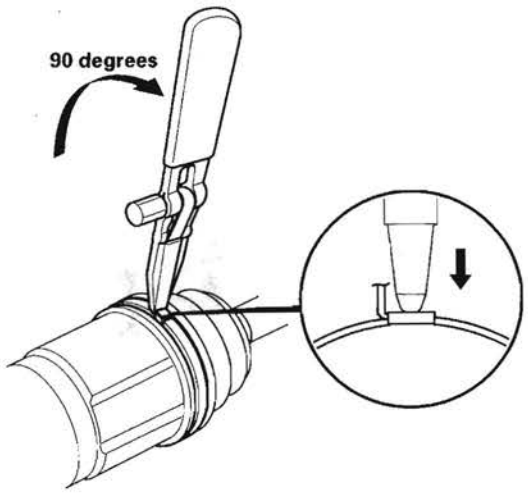

7. Unwind the boot band tool, and cut off the excess free end of the band to leave a 5—10 mm (0.2—0.4 in.) tail protruding from the clip.

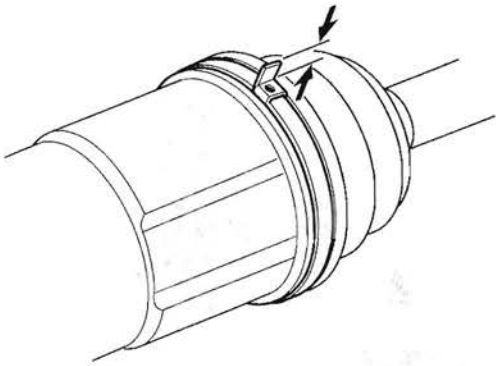

8. Bend the band end (A) by tapping it down with a hammer.

NOTE:
- Make sure the band and clip do not interfere with anything on the vehicle and the band does not move.
- Clean any grease remaining on the surrounding surfaces.

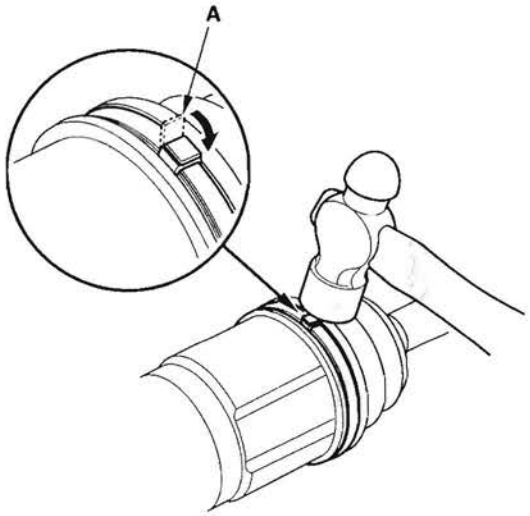

Ear Clamp Type

1. Close the ear portion (A) of the band with commercially available boot band pliers Kent-Moore J-35910 or equivalent (B).

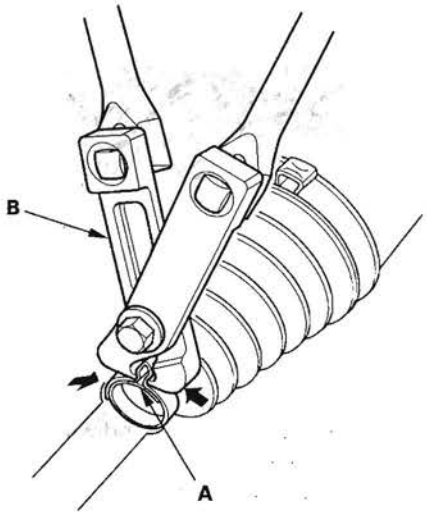

2. Check the clearance between the closed ear portion of the band. If the clearance is not within the standard, close the ear portion of the band farther.

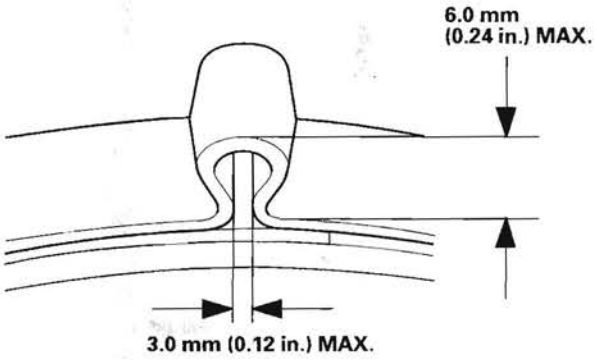

(cont'd)

Boot Band Installation (cont'd)

Low Profile Type

1. Install the new low profile band (A) onto the boot (B), then hook the tab (C) of the band.

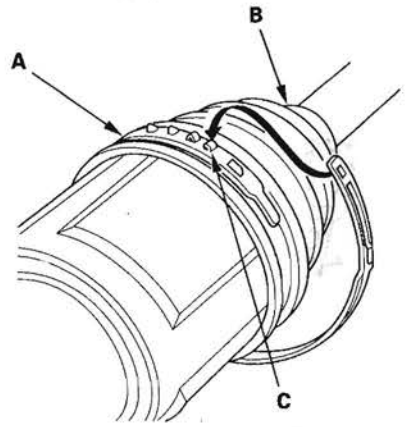

2. Close the hook portion of the band with commercially available boot band pliers (A), then hook the tabs (B) of the band.

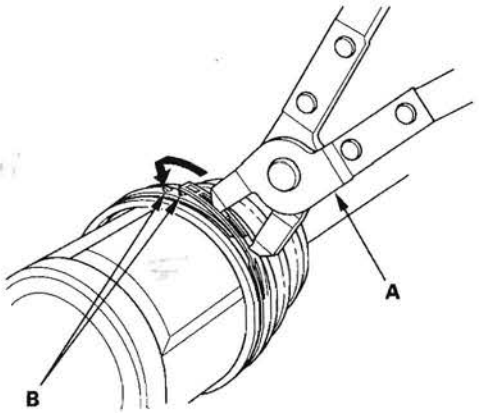

Front Driveshaft Reassembly

Exploded View

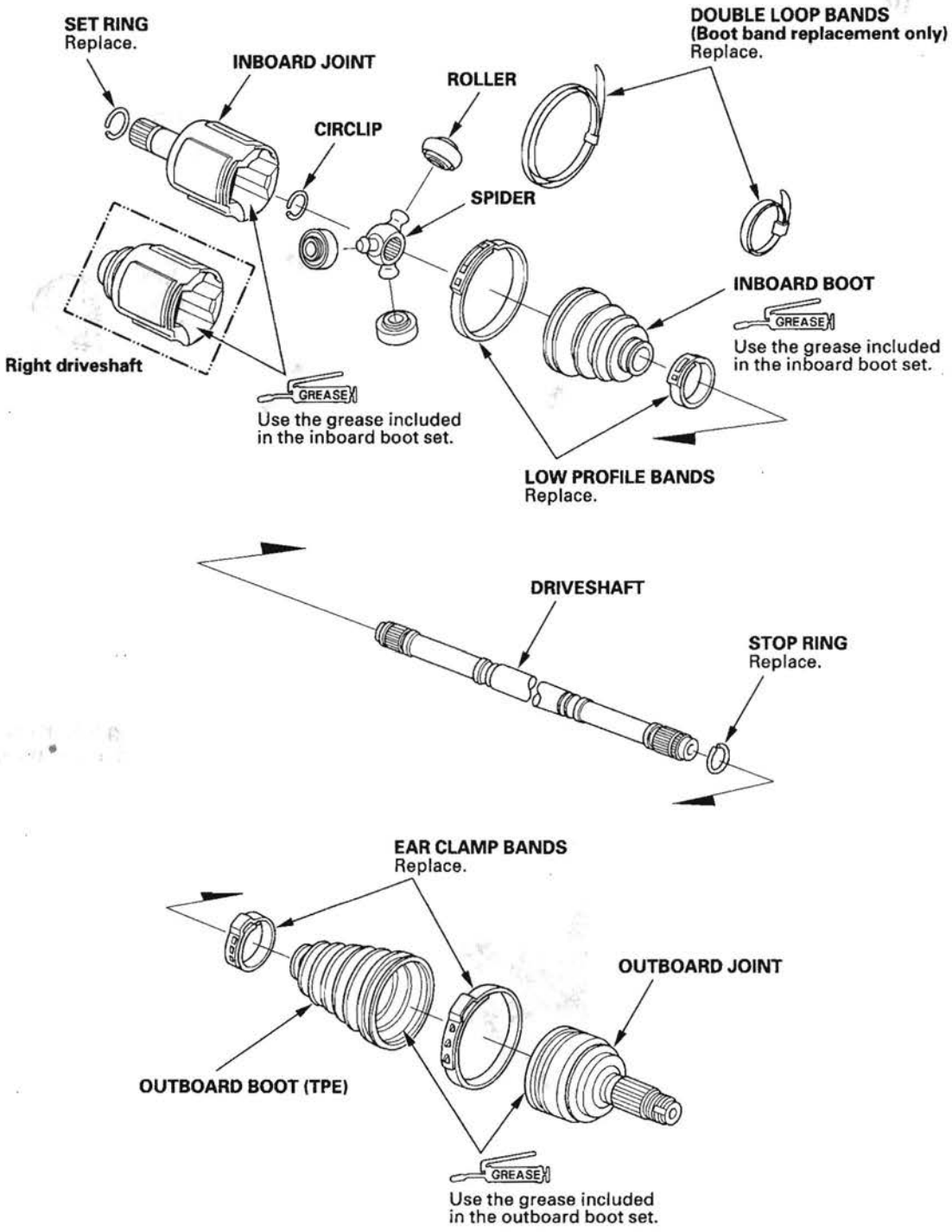

(cont'd)

Front Driveshaft Reassembly (cont'd)

NOTE: Refer to the Exploded View as needed during this procedure.

Inboard Joint Side

1. Wrap the splines with vinyl tape (A) to prevent damaging to the inboard boot.

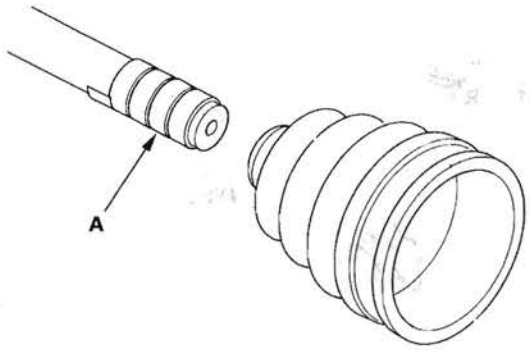

2. Install the inboard boot onto the driveshaft, then remove the vinyl tape. Be careful not to damage the inboard boot.

3. Install the spider (A) onto the driveshaft by aligning the marks (B) you made on the spider and the end of the driveshaft.

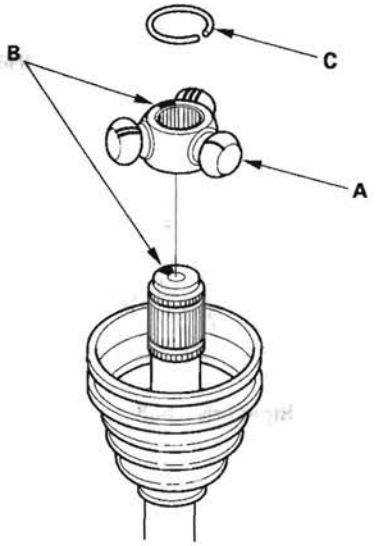

4. Install the circlip (C) into the driveshaft groove. Rotate the circlip in its groove to make sure it is fully seated.

5. Fit the rollers (A) onto the spider (B) with their high shoulders facing outward, and note these items:

   - Reinstall the rollers in their original positions on the spider by aligning the marks (C) you made.
   - Hold the driveshaft pointing up to prevent the rollers from falling off.

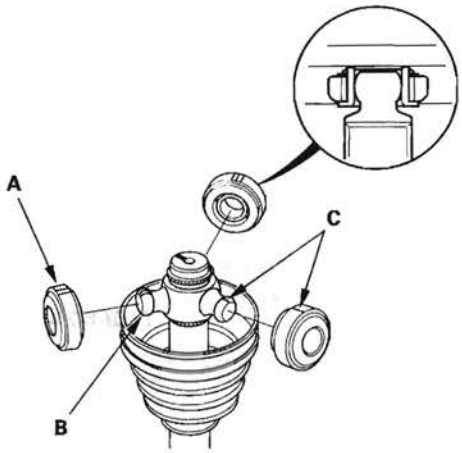

6. Pack the inboard joint with the joint grease included in the inboard boot set.

Grease quantity
Inboard joint: 150—160 g (5.3—5.6 oz)



7. Fit the inboard joint onto the driveshaft, and note these items:

   - Reinstall the inboard joint onto the driveshaft by aligning the marks (A) you made on the inboard joint and the rollers.
   - Hold the driveshaft so the inboard joint is pointing up to prevent it from falling off.

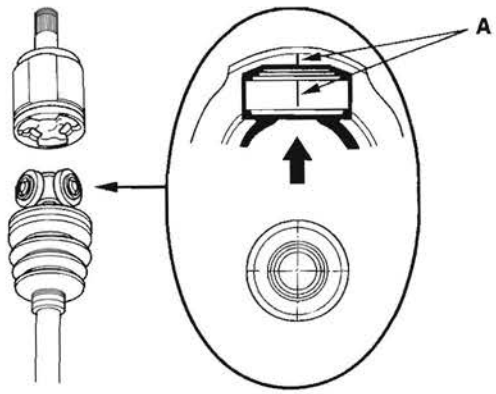

8. Fit the boot ends onto the driveshaft and the inboard joint, then install the new boot band onto the boot (see page 16-10)

9. Repeat step 8 for the band on the other end of the boot.

(cont'd)

Front Driveshaft Reassembly (cont'd)

Outboard Joint Side

1. Wrap the splines with vinyl tape (A) to prevent damaging the outboard boot.

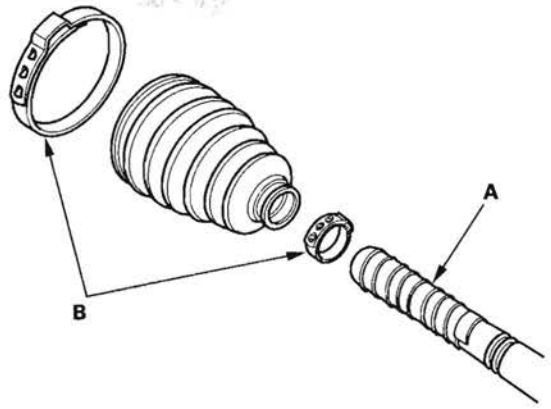

2. Install the new ear clamp bands (B) and outboard boot, then remove the vinyl tape. Be careful not to damage the outboard boot.

3. Install the new stop ring (A) into the driveshaft groove (B).

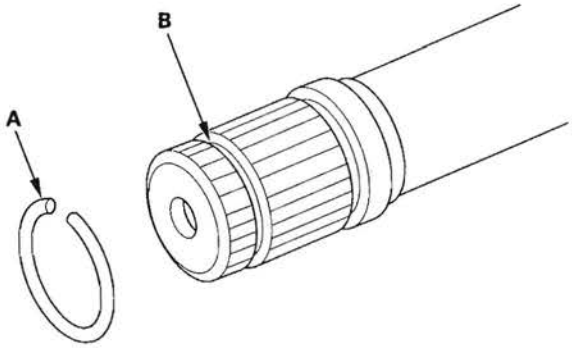

4. Pack about half of the grease included in the new outboard boot set into the driveshaft hole in the outboard joint. Insert the driveshaft (A) into the outboard joint (B) until the stop ring (C) is closed.

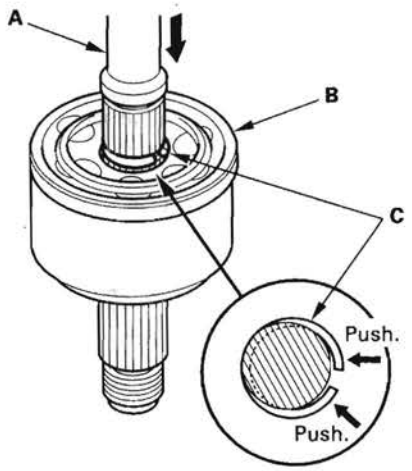

5. To completely seat the outboard joint, pick up the driveshaft and joint, and tap or hit them from a height of about 10 cm (4 in.) onto a hard surface. Do not use a hammer as excessive force may damage the driveshaft. Be careful not to damage the threaded section (A) of the outboard joint.

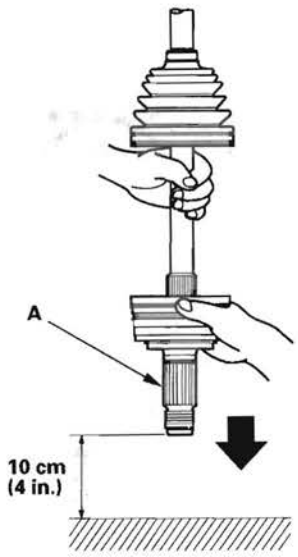

6. Check the alignment of the paint mark (A) you made with the outboard joint end (B).

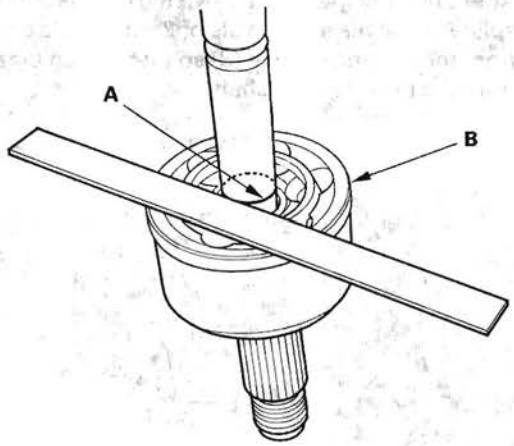

7. Pack the outboard joint (A) with the remaining joint grease included in the new outboard boot set.

Grease quantity
Outboard joint: 140—150 g (4.9—5.3 oz)



Use the grease included in the outboard boot set.

8. Fit the boot ends (A) into the driveshaft (B) and outboard joint (C) grooves.

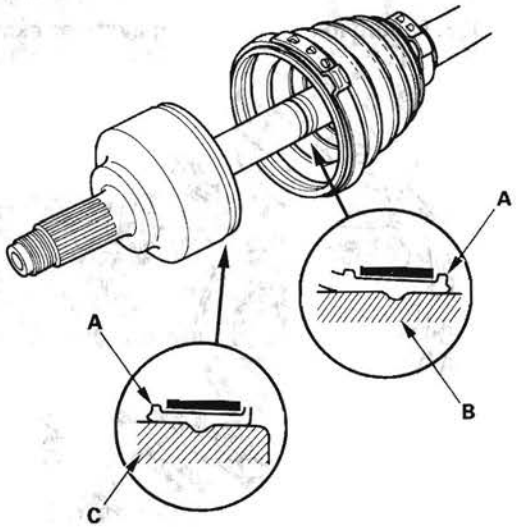

9. Adjust the length of the driveshafts to the figure below then adjust the boots to halfway between full compression and full extension. Make sure the ends of the boots seat in the groove of the driveshaft and joint. Doing this prevents a vacuum or too much air in the boot, preventing it from compressing or extending properly.

Left driveshaft: 463—468 mm (18.2—18.4 in.)

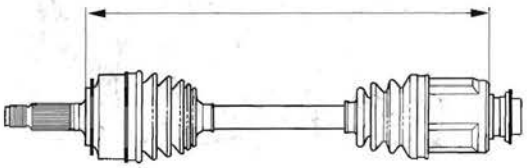

Right driveshaft: 544—549 mm (21.4—21.6 in.)

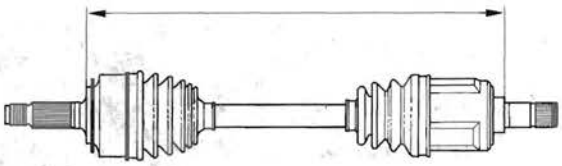

10. Install the new ear clamp band onto the boot (see page 16-10).

11. Repeat steps 10 for the band on the other end of the boot.

Front Driveshaft Installation

1. Apply grease to the contact area (A) of the outboard joint and front wheel bearing.

   NOTE: Failure to apply grease may cause excessive noise and vibration.

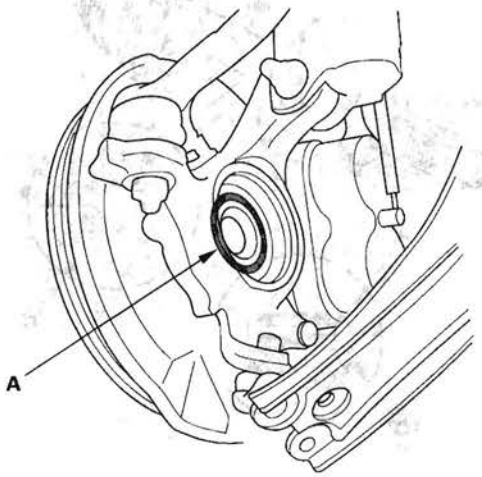

2. Install a new set ring (A) onto the set ring groove (B) of the driveshaft (left driveshaft).

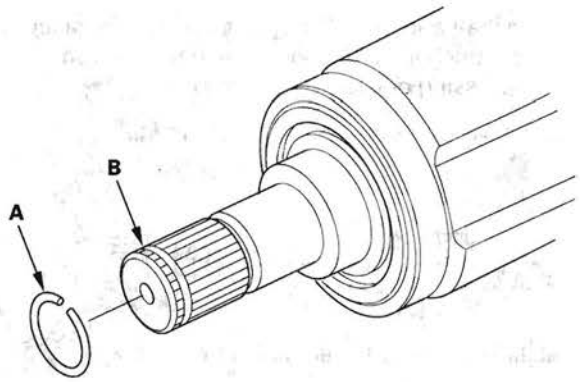

3. Apply 0.5—1.0 g (0.02—0.04 oz) of grease to the whole splined surface (A) of the right driveshaft. After applying grease, remove the grease from the splined grooves at intervals of 2—3 splines and from the set ring groove (B) so that air can bleed from the intermediate shaft.

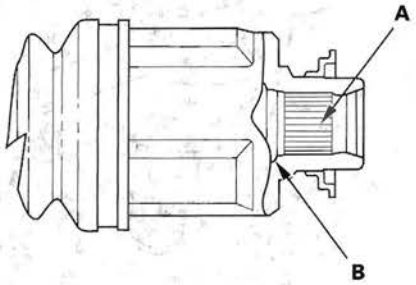

4. Clean the areas where the driveshaft contacts the differential thoroughly with solvent or brake cleaner, and dry with compressed air. Insert the inboard end (A) of the driveshaft into the differential (B) or intermediate shaft (C) until the set ring (D) locks in the groove (E).

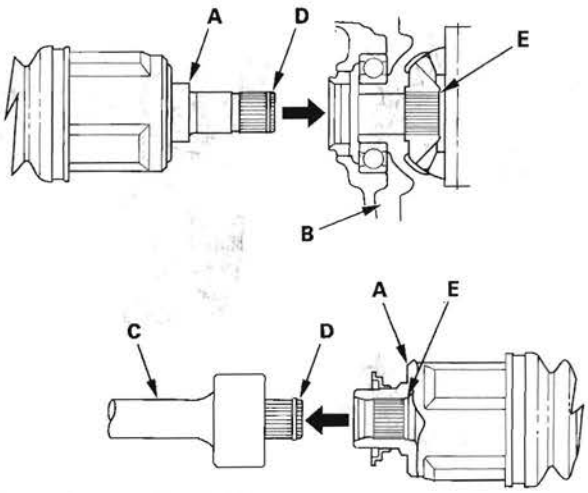

5. Install the outboard joint (A) into the front hub (B).

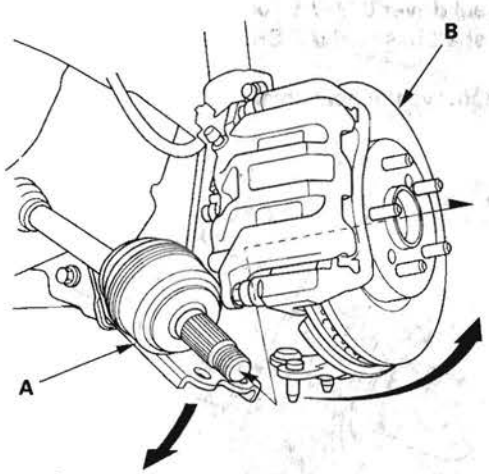

6. Install the knuckle (A) onto the lower arm (B). Then tighten the nuts and bolt (C) to the torque specification.

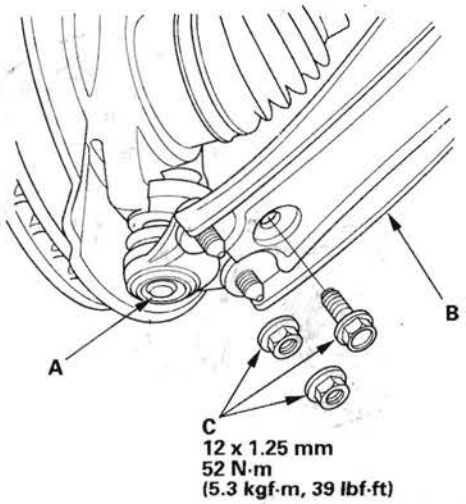

7. Install a new spindle nut (A), then tighten the nut. After tightening, use a drift to stake the spindle nut shoulder (B) against the driveshaft.

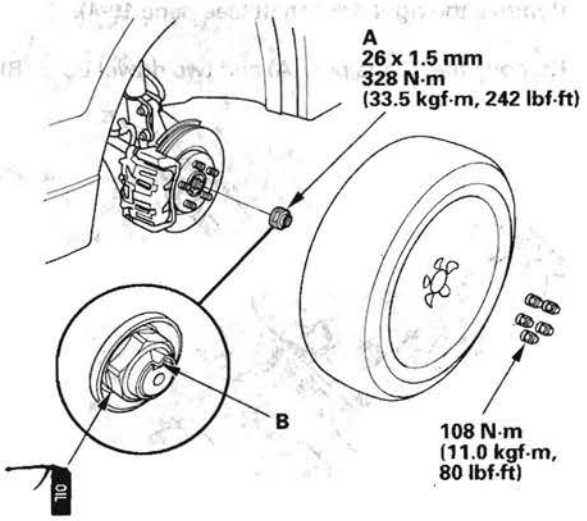

8. Clean the mating surfaces of the brake disc and the front wheel, then install the front wheel.

9. Turn the front wheel by hand, and make sure there is no interference between the driveshaft and surrounding parts.

10. Refill the transmission with the recommended automatic transmission fluid (see page 14-239).

11. Check the front wheel alignment, and adjust it if necessary (see page 18-5).

Intermediate Shaft Removal

1. Drain the automatic transmission fluid. Reinstall the drain plug with a new washer (see page 14-239).
2. Remove the right driveshaft (see page 16-4).
3. Remove the flange bolt (A) and two dowel bolts (B).

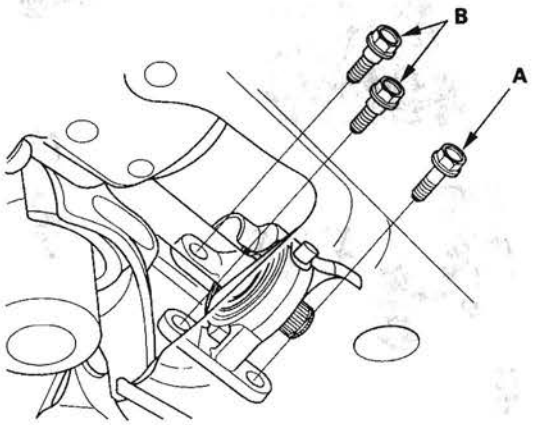

4. Remove the intermediate shaft (A) from the differential. Hold the intermediate shaft horizontal until it is clear of the differential to prevent damaging the differential oil seal (B).

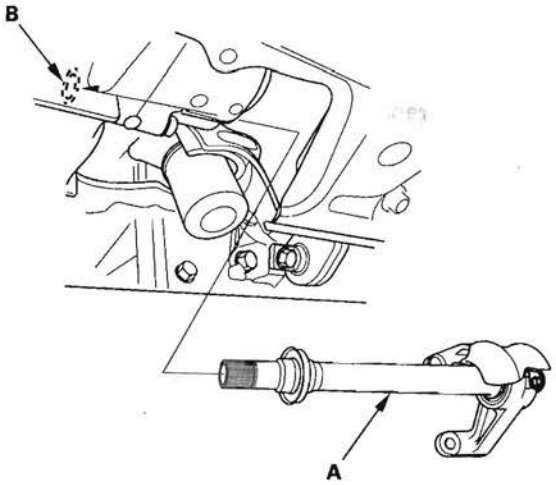

Intermediate Shaft Disassembly

Special Tools Required
- Oil seal driver 07947-SB00100
- Half shaft base 07NAF-SR30101

1. Remove the heat shield.

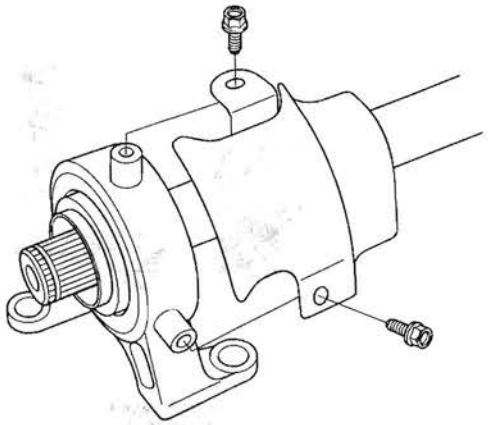

2. Remove the set ring (A), outer seal (B), and external snap ring (C).

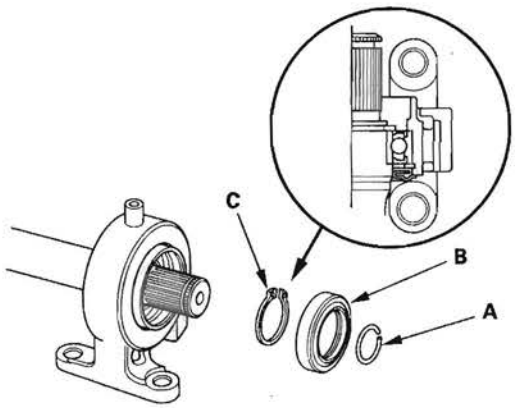

3. Press the intermediate shaft (A) out of the intermediate shaft bearing (B) using a press. Be careful not to damage the bearing support ring (C) on the intermediate shaft during disassembly.

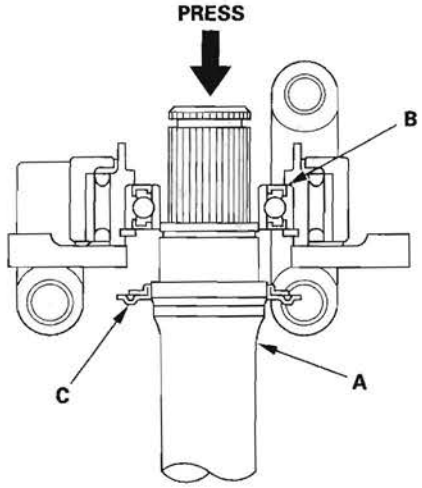

4. Remove the internal snap ring.

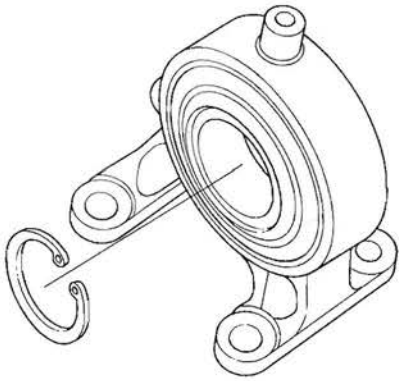

5. Press the intermediate shaft bearing (A) out of the bearing support (B) using the oil seal driver (C), half shaft base (D), and a press.

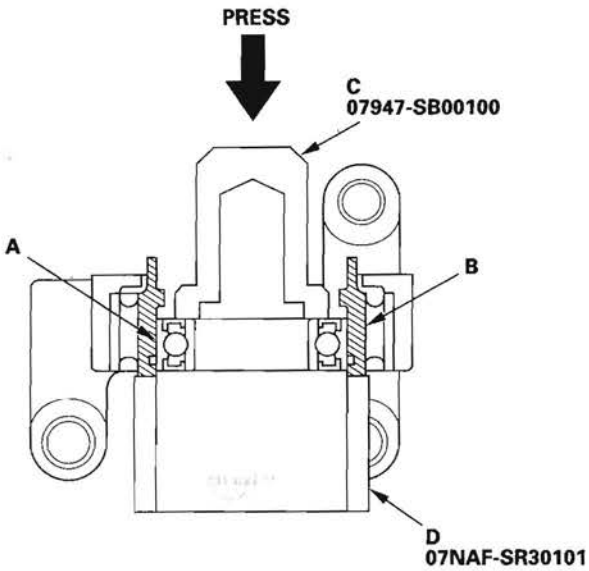

Intermediate Shaft Reassembly

Exploded View

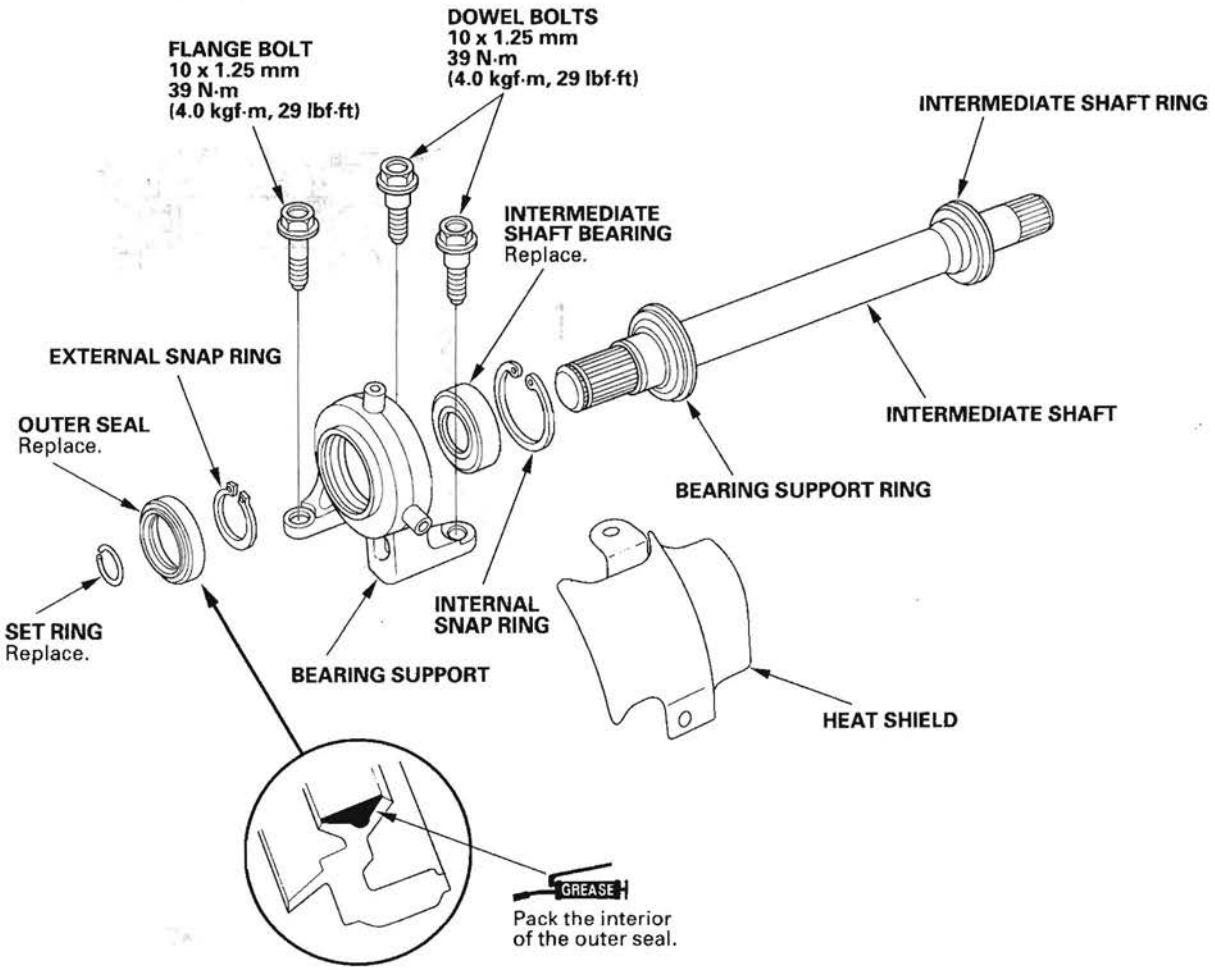

Special Tools Required
- Driver 07749-0010000
- Attachment, 52 x 55 mm 07NAD-P200100
- Attachment, 35 mm I.D. 07746-0030400
- Oil seal driver 07JAD-PL90100

NOTE: Refer to the Exploded View as needed during this procedure.

1. Clean the disassembled parts with solvent, and dry them with compressed air. Do not wash the rubber parts with solvent.

2. Press the intermediate shaft bearing (A) into the bearing support (B) using the driver (C), attachment (D), and a press.

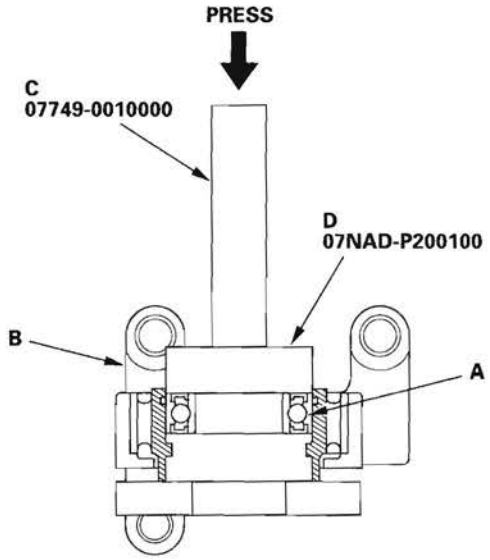

3. Install, then seat the internal snap ring in the groove of the bearing support.

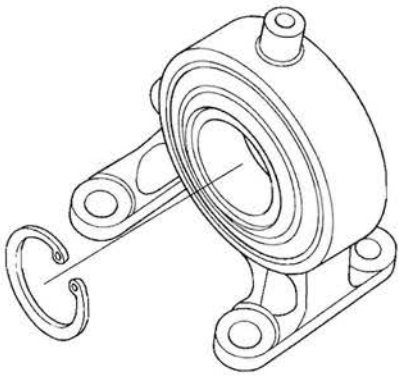

4. Press the intermediate shaft (A) into the shaft bearing (B) using the attachment (C), and a press.

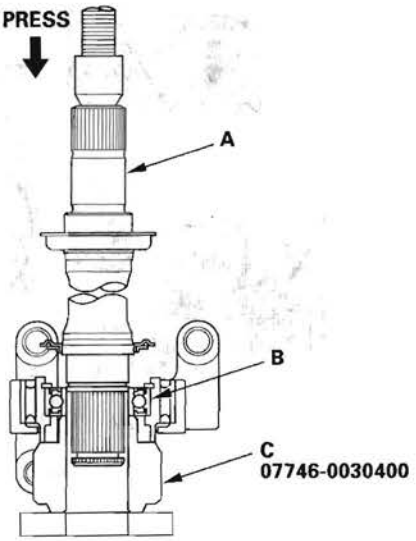

5. Install, then seat the external snap ring (A) in the groove of the intermediate shaft (B).

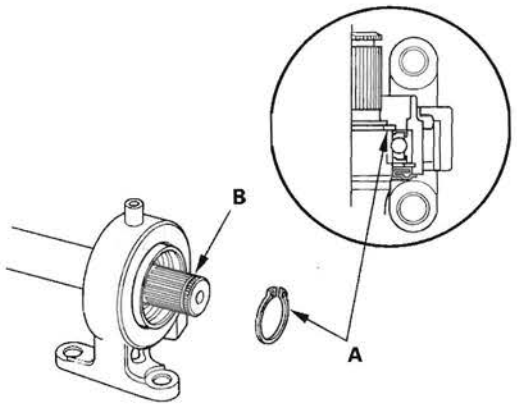

(cont'd)

Intermediate Shaft Reassembly (cont'd)

6. Install the outer seal (A) into the bearing support (B) using the oil seal driver (C) and a press.

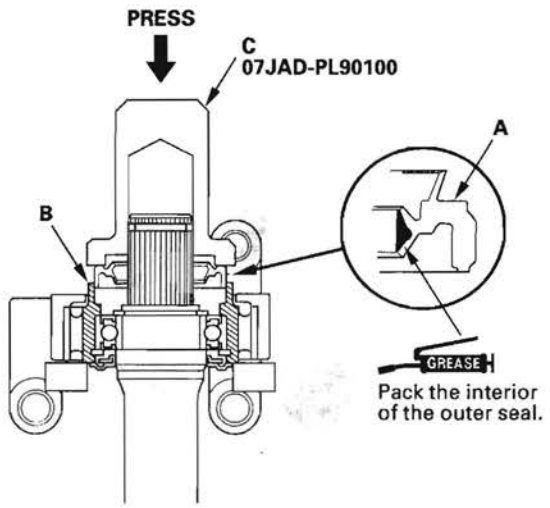

7. Install the set ring.

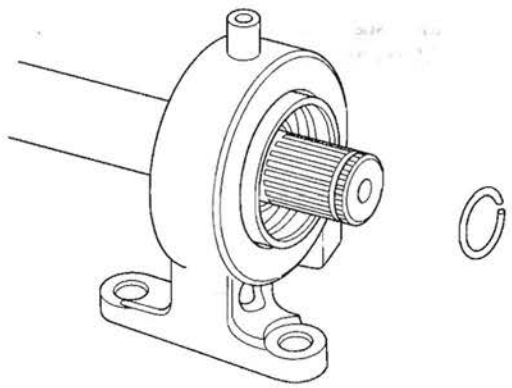

8. Install the heat shield.

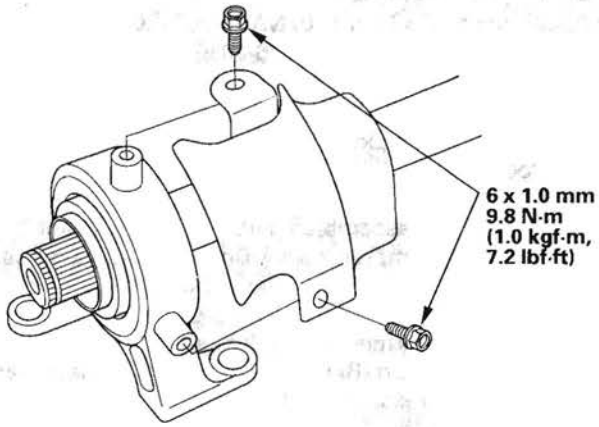

Intermediate Shaft Installation

1. Use solvent or brake cleaner to thoroughly clean the areas where the intermediate shaft (A) contacts the transmission (differential), and dry with compressed air. Insert the intermediate shaft assembly into the differential. Hold the intermediate shaft horizontal to prevent damage to the differential oil seal (B).

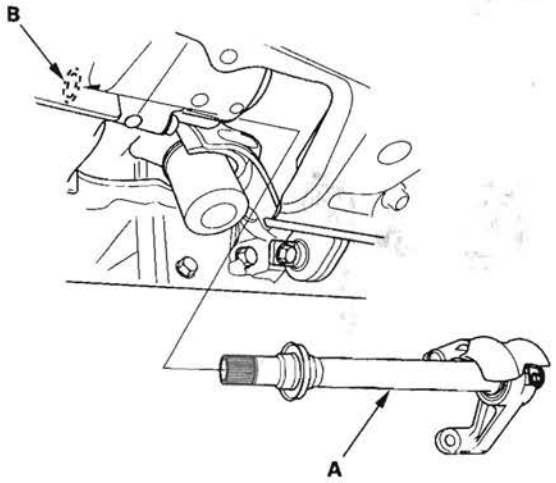

2. Install the flange bolt (A) and two dowel bolts (B).

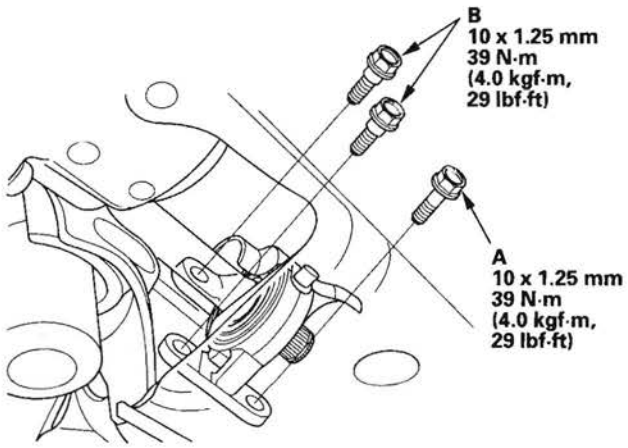

3. Install the right driveshaft (see page 16-18).

4. Refill the transmission with the recommended automatic transmission fluid (see page 14-239).

Rear Driveshaft Removal

1. Raise the vehicle on a lift, and remove the rear wheels (see page 1-7).

2. Lift up the locking tab (A) on the spindle nut (B), then remove the nut.

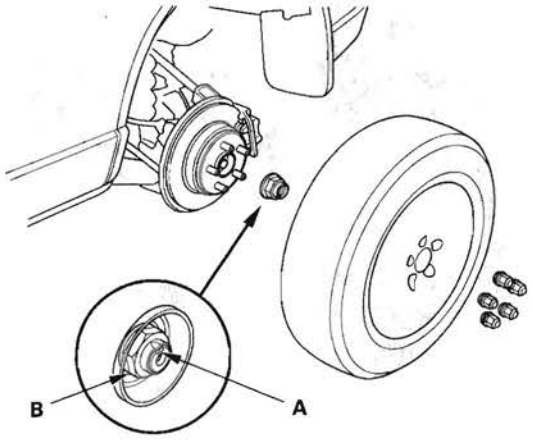

3. Drain the differential fluid (see page 15-21).

4. Remove the rear driveshaft inboard joint from the rear differential assembly (see page 15-22).

5. Disconnect the rear driveshaft outboard joint from the trailing arm and rear wheel hub using a plastic hammer or a puller if necessary.

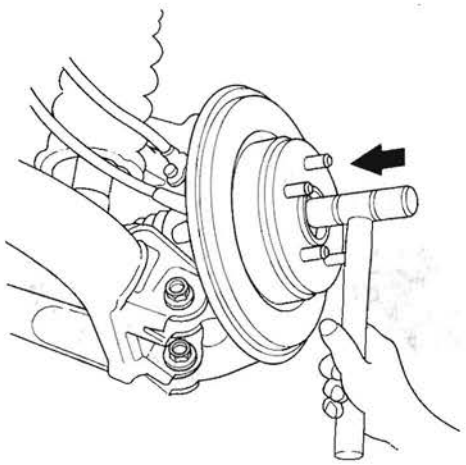

6. Remove the rear driveshaft (A).

NOTE:
- Be careful not to damage the ABS wheel sensor (B).
- Pull on the outer joint. Do not pull on the driveshaft because the joint may come apart.

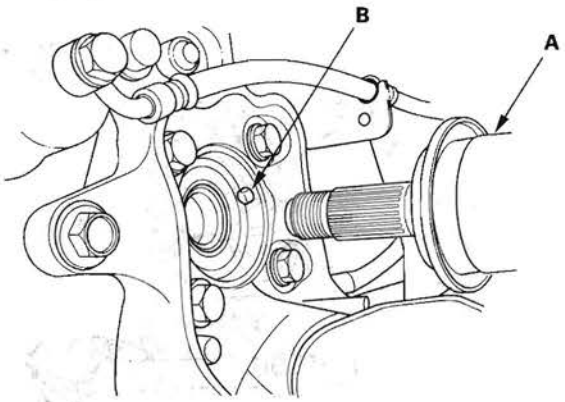

Rear Driveshaft Disassembly

Special Tools Required
- Threaded adapter, 24 x 1.5 mm 07XAC-001020A
- Slide hammer, 5/8"-18 UNF, commercially available

Inboard Joint Side (Japan-built Models)

NOTE:
- Due to the amount of work required to replace one damaged boot, it is best to replace both boots at the same time.
- These instructions are for the inboard joint. The same procedure applies to the outboard joint.

1. Remove the set ring (A) from the inboard joint.

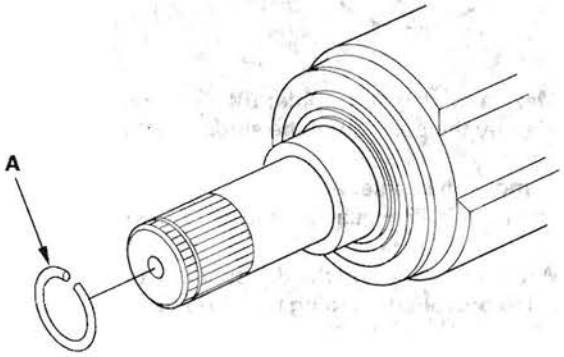

2. Remove the boot bands. Be careful not to damage the boot (see page 16-6).

3. Make a mark (A) on each roller (B) and inboard joint (C) to identify the locations of rollers and grooves in the inboard joint. Then remove the inboard joint on a shop towel (D). Be careful not to drop the rollers when separating them from the inboard joint.

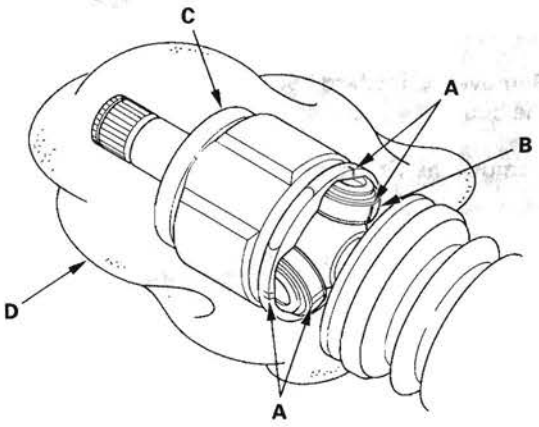

4. Make marks (A) on the rollers (B) and spider (C) to identify the locations of the rollers on the spider, then remove the rollers.

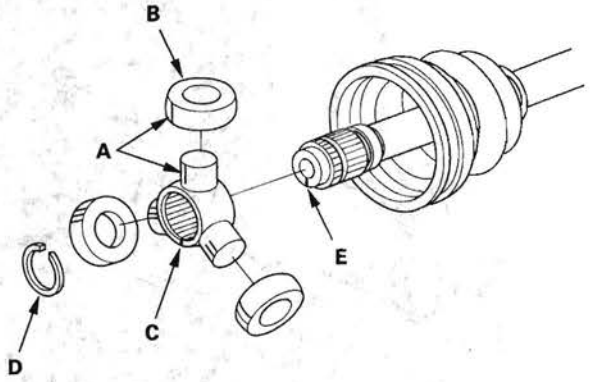

5. Remove the circlip (D).

6. Mark the spider (C) and driveshaft (E) to identify the position of the spider on the shaft.

7. Remove the spider (C).

8. Wrap the splines on the driveshaft with vinyl tape (A) to prevent damaging to the boot.

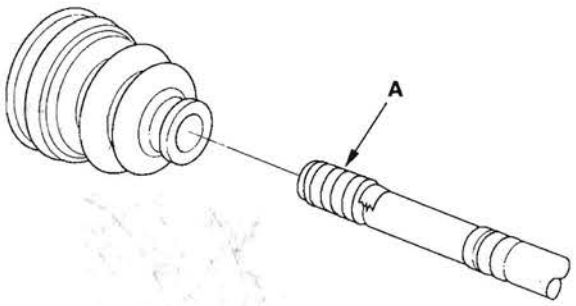

9. Remove the inboard boot. Be careful not to damage the boot.

10. Remove the vinyl tape.

(cont'd)

Rear Driveshaft Disassembly (cont'd)

Inboard Joint Side (US-built Models)

1. Remove the set ring (A) from the inboard joint.

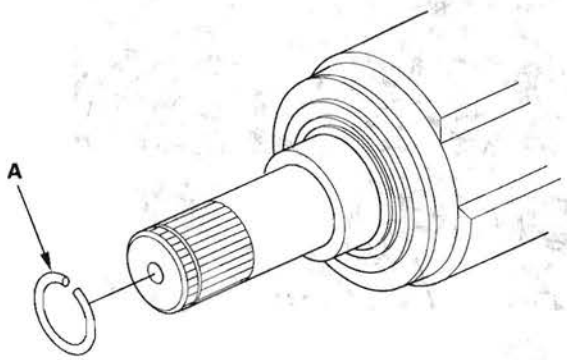

2. Remove the boot bands. Be careful not to damage the boot and dynamic damper (see page 16-6).

3. Make a mark (A) on each roller (B) and inboard joint (C) to identify the locations of rollers and grooves in the inboard joint. Then remove the inboard joint on a shop towel (D). Be careful not to drop the rollers when separating them from the inboard joint.

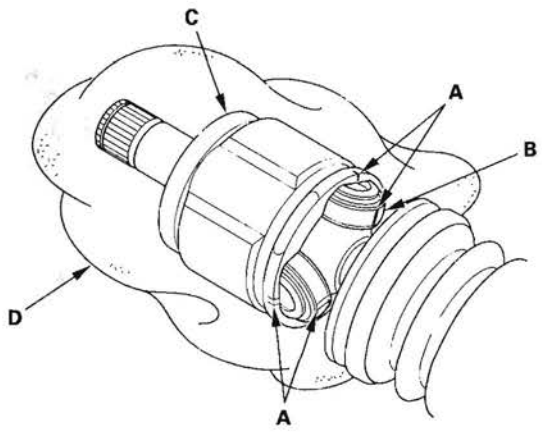

4. Remove the circlip (A).

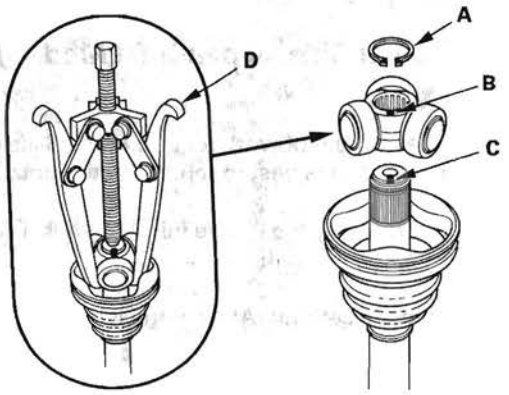

5. Make a mark on the spider (B) and driveshaft (C) to identify the position of the spider on the shaft.

6. Remove the spider and rollers using a commercially available bearing remover (D).

7. Wrap the splines on the driveshaft with vinyl tape (A) to prevent damaging to the boot.

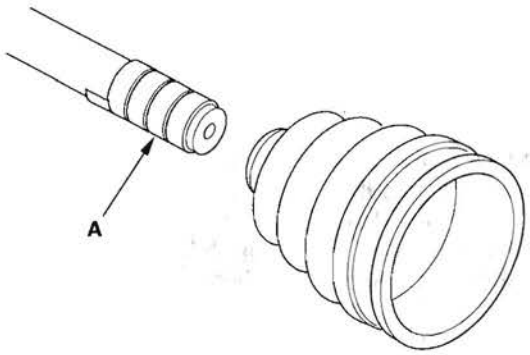

8. Remove the inboard boot. Be careful not to damage the boot.

9. Remove the vinyl tape.

Outboard Joint Side

1. Remove the boot bands. Be careful not to damage the boot (see page 16-6).

2. Slide the outboard boot (A) partially to the inboard joint side. Be careful not to damage the boot.

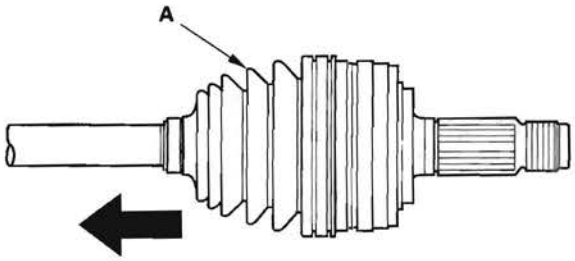

3. Wipe off the grease to expose the driveshaft and the outboard joint inner race.

4. Make a mark (A) on the driveshaft (B) at the same level as the outboard joint end (C).

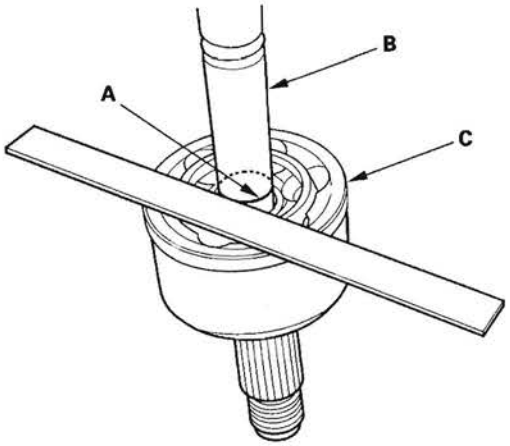

5. Securely clamp the driveshaft in a bench vise with a shop towel.

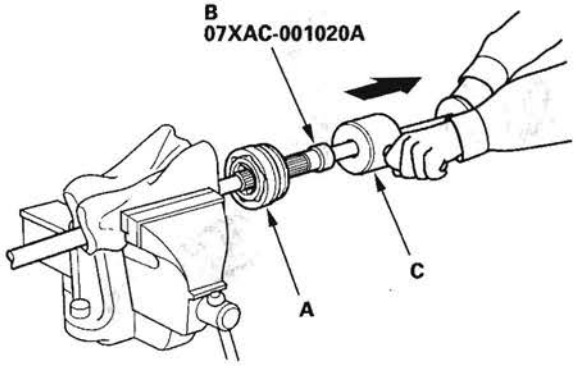

6. Remove the outboard joint (A) using the threaded adapter (B) and a commercially available 5/8"-18 UNF slide hammer (C).

7. Remove the driveshaft from the bench vise.

8. Remove the stop ring (A) from the driveshaft.

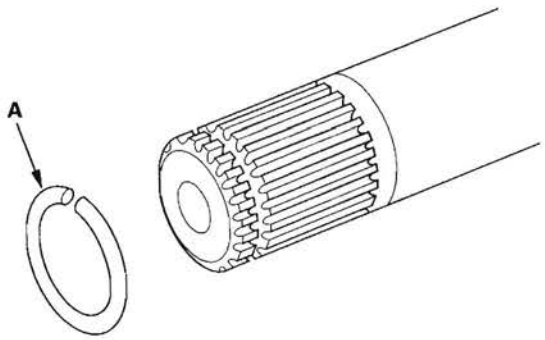

(cont'd)

Rear Driveshaft Disassembly (cont'd)

9. Wrap the splines on the driveshaft with vinyl tape (A) to prevent damaging the boot.

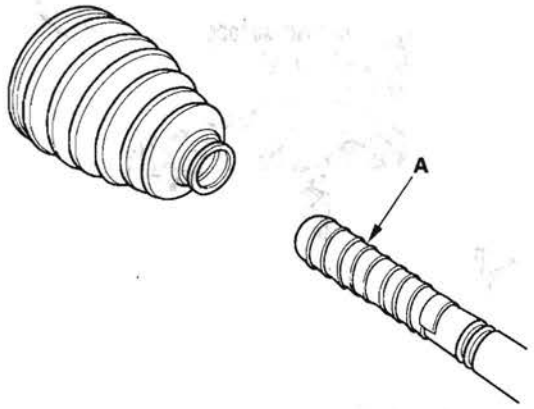

10. Remove the outboard boot. Be careful not to damage the boot.

11. Remove the vinyl tape.

Rear Driveshaft Reassembly

Exploded View

Japan-built Models

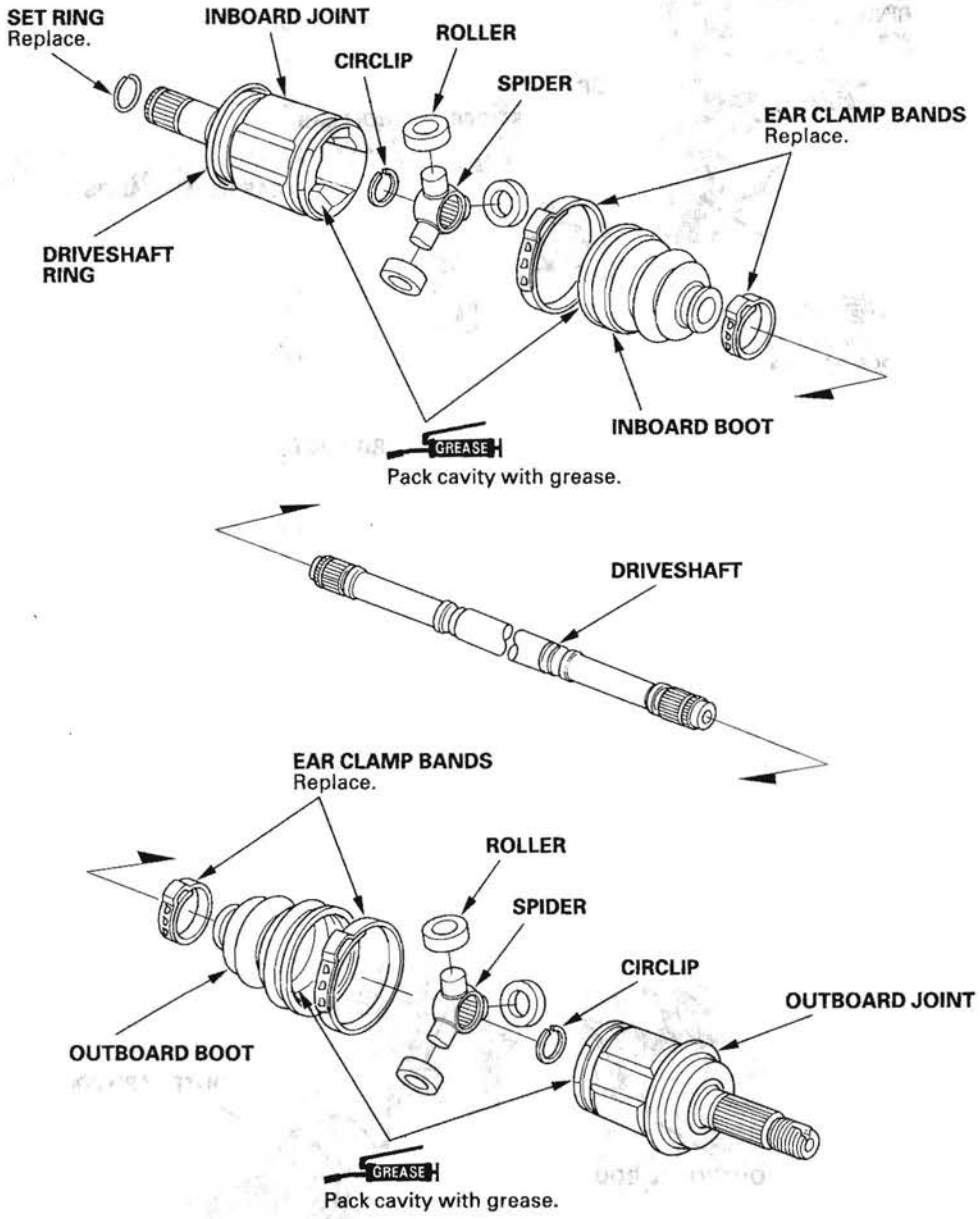

(cont'd)

Rear Driveshaft Reassembly (cont'd)

Exploded View

US-built Models

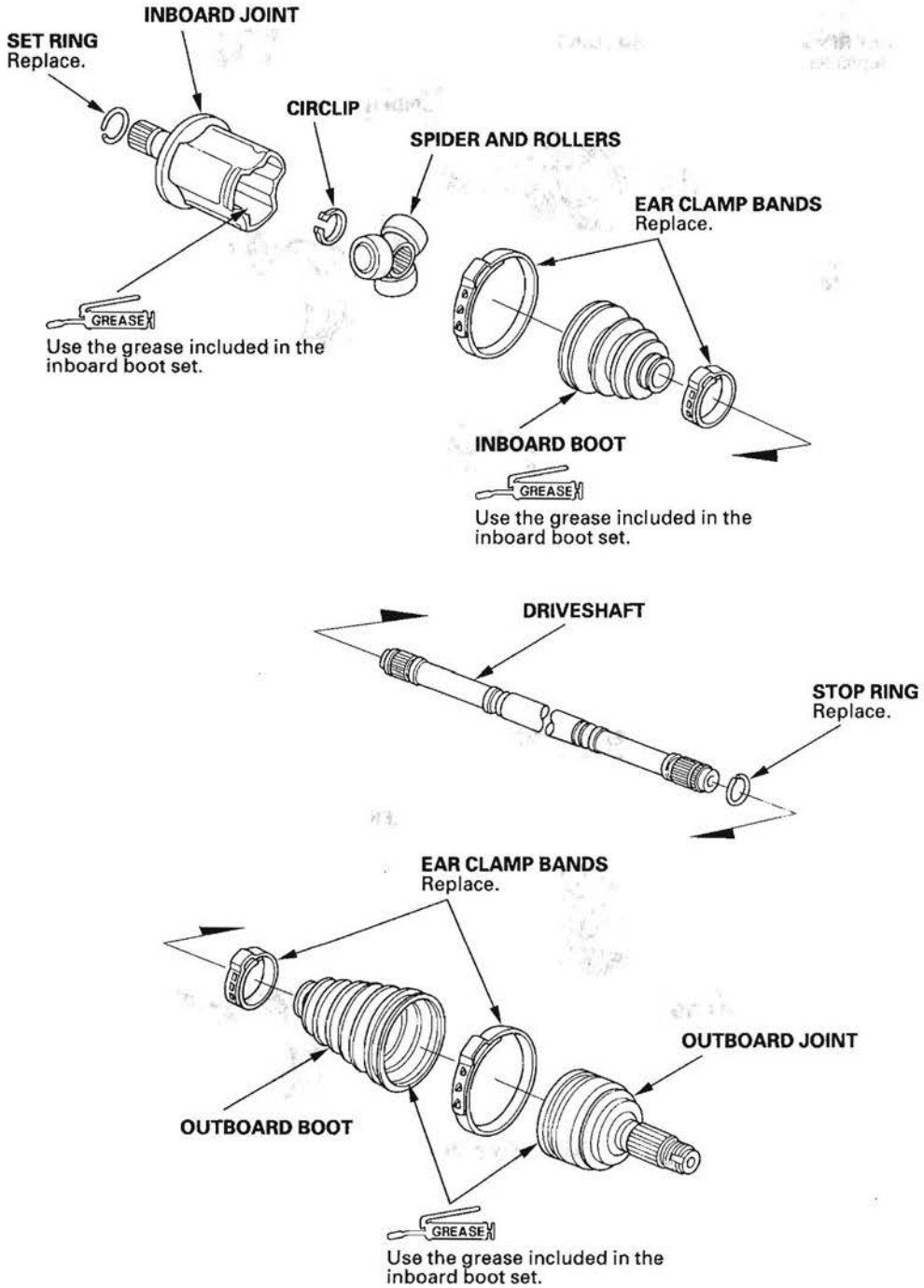

Special Tools Required
Inner handle, 30 mm 07946-MB00000

NOTE: Refer to the Exploded View as needed during this procedure.

Inboard Joint Side (Japan-built Models)

1. Wrap the splines with vinyl tape (A) to prevent damaging the inboard boot.

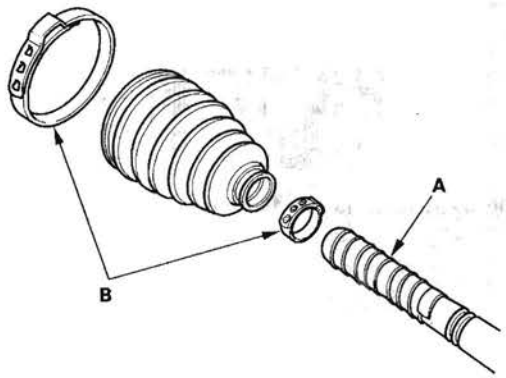

2. Install the new ear clamp bands (B) and inboard boot, then remove the vinyl tape. Be careful not to damage the inboard boot.

3. Install the spider (A) onto the driveshaft by aligning the marks (B) you made on the spider and the end of the driveshaft.

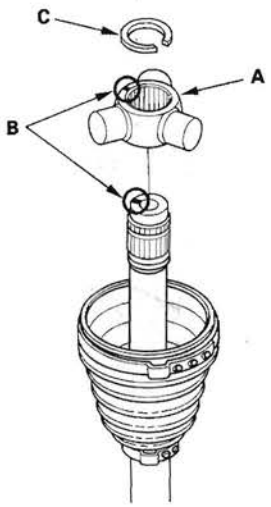

4. Fit the circlip (C) into the driveshaft groove. Always rotate the circlip in its groove to make sure it is fully seated.

5. Fit the rollers (A) onto the spider (B) with their high shoulders facing outward, and note these items:

   - Reinstall the rollers in their original positions on the spider by aligning the marks (C) you made.
   - Hold the driveshaft pointed up to prevent the rollers from falling off.

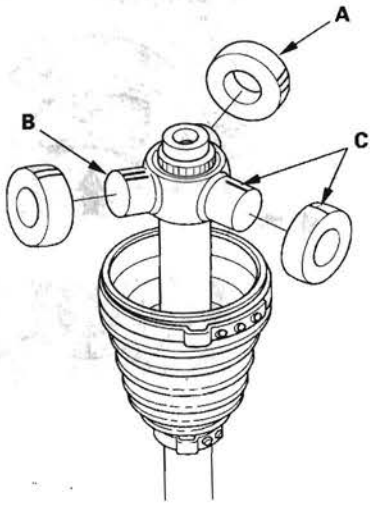

6. Pack the inboard joint with the joint grease included in the new inboard boot set.

Grease quantity
Inboard joint: 80—90 g (2.8—3.2 oz)



(cont'd)

Rear Driveshaft Reassembly (cont'd)

7. Fit the inboard joint (A) onto the driveshaft, and note these items:

   - Reinstall the inboard joint onto the driveshaft by aligning the marks (B) on you made the inboard joint and the rollers (C).
   - Hold the driveshaft so the inboard joint points up to prevent it from falling off.

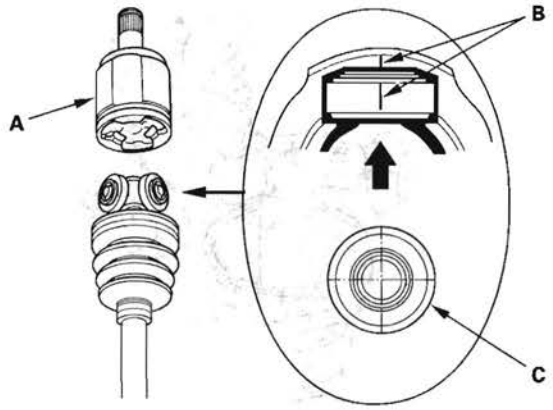

8. Fit the boot (A) ends onto the driveshaft (B) and inboard joint (C).

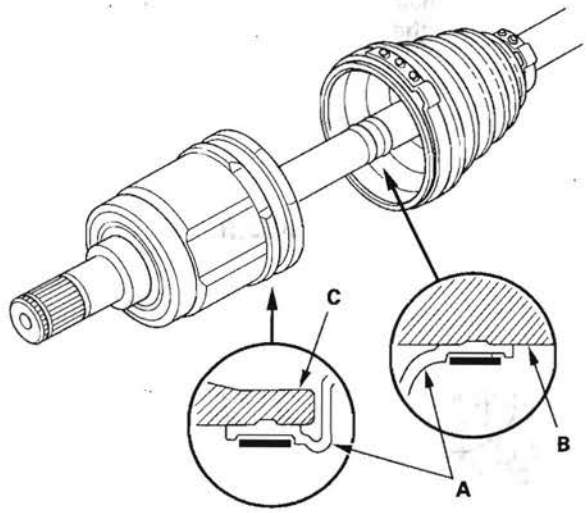

9. Adjust the length of the driveshafts to the figure as shown, then adjust the boots to halfway between full compression and full extension. Make sure the ends of the boots seat in the grooves of the driveshaft and joint. Doing this prevents a vacuum or too much air in the boot, preventing it from compressing or extending properly.

Inboard joint: 146.9—150.9 mm (5.8—5.9 in.)

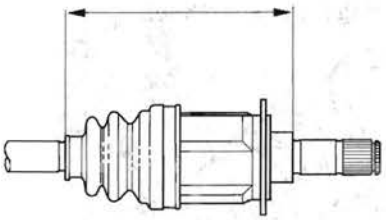

Outboard joint: 136.9—140.9 mm (5.4—5.5 in.)

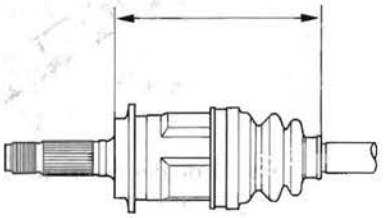

10. Make sure the ends of the boot are seated in the grooves in the driveshaft and joint, then install the boot bands (see page 16-10).

11. Install the new set ring (A).

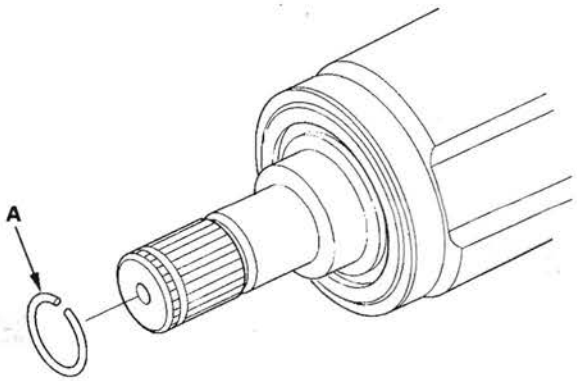

Inboard Joint Side (US-built Models)

1. Wrap the splines with vinyl tape (A) to prevent damaging the inboard boot.

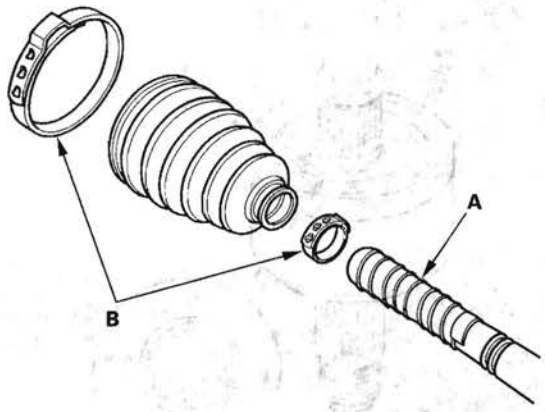

2. Install the new ear clamp bands (B) and inboard boot, then remove the vinyl tape. Be careful not to damage the inboard boot.

3. Install the spider and rollers (A) onto the driveshaft by aligning the marks (B) you made, install it using the inner handle (D).

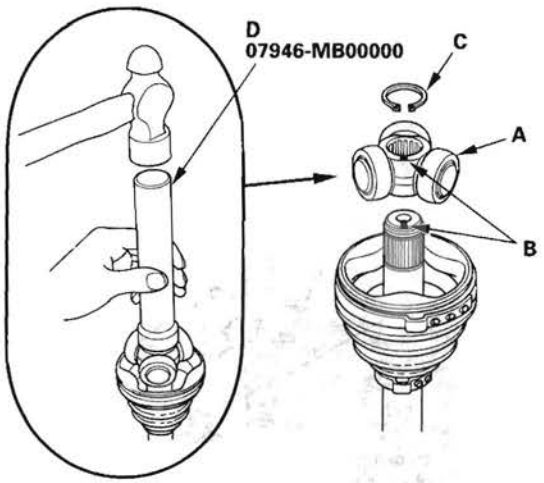

4. Install the circlip (C) into the driveshaft groove. Rotate the circlip in its groove to make sure it is fully seated.

5. Pack the inboard joint with the joint grease included in the new inboard boot set.

Grease quantity
Inboard joint: 96—124 g (3.4—4.3 oz)



6. Fit the inboard joint onto the driveshaft, and note these items:

   - Reinstall the inboard joint onto the driveshaft by aligning the marks (A) you made, on the inboard joint and the rollers.
   - Hold the driveshaft so the inboard joint is pointing up to prevent it from falling off.

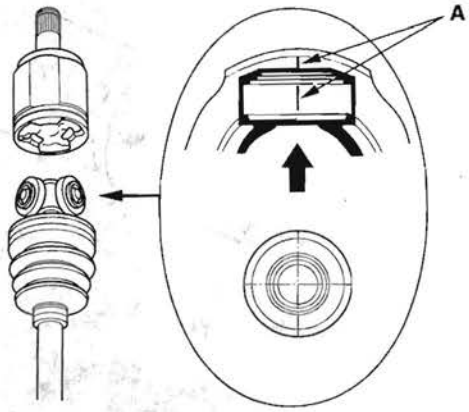

7. Fit the boot ends onto the driveshaft and the inboard joint, then install the new boot band onto the boot (see page 16-10).

8. Repeat step 8 for the band on the other end of the boot.

(cont'd)

Rear Driveshaft Reassembly (cont'd)

Outboard Joint Side

1. Wrap the splines with vinyl tape (A) to prevent damaging the outboard boot.

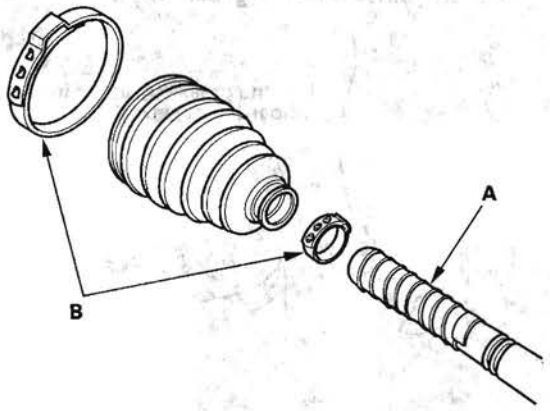

2. Install the new ear clamp bands (B) and outboard boot, then remove the vinyl tape. Be careful not to damage the outboard boot.
3. Install the new stop ring (A) into the driveshaft groove (B).

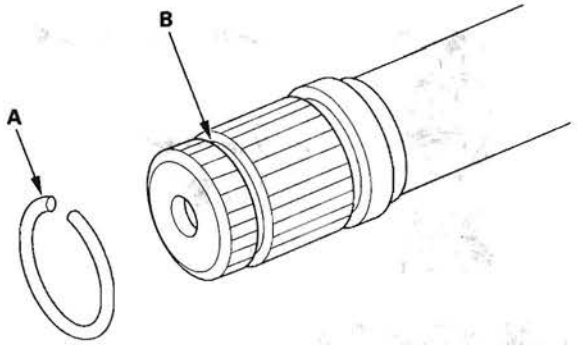

4. Pack about half of the grease included in the new joint boot set into the driveshaft hole in the outboard joint. Insert the driveshaft (A) into the outboard joint (B) until the stop ring (C) is closed.

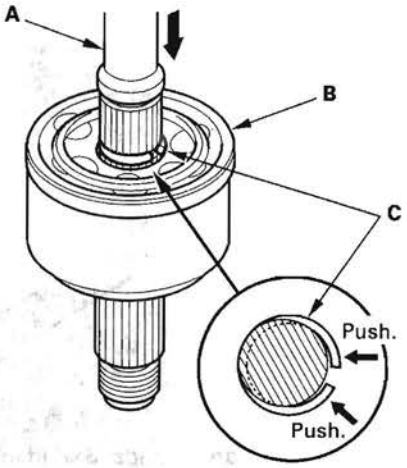

5. To completely seat the outboard joint, pick up the driveshaft and joint, and tap or hit them from a height of about 10 cm (4 in.) onto a hard surface. Do not use a hammer as excessive force may damage the driveshaft. Be careful not to damage the threaded section (A) of the outboard joint.

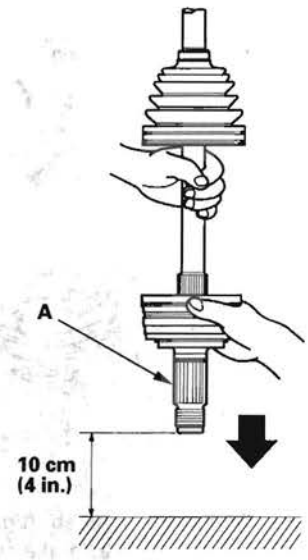

6. Check the alignment of the paint mark (A) you made with the outboard joint end (B).

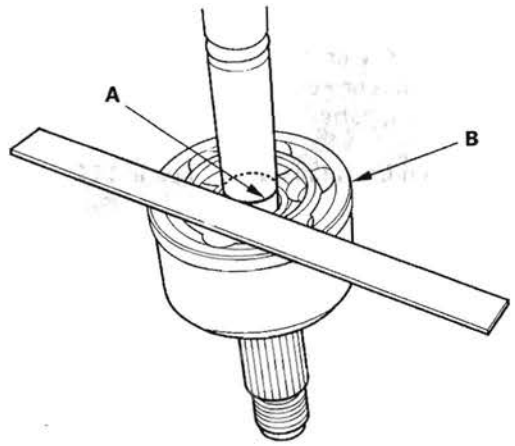

7. Pack the outboard joint (A) with the remaining joint grease included in the new outboad boot set.

Grease quantity
Outboard joint: 70—90 g (2.5—3.2 oz)



Use the grease included in the outboard boot set.

8. Fit the boot ends (A) into the driveshaft (B) and outboard joint (C) grooves.

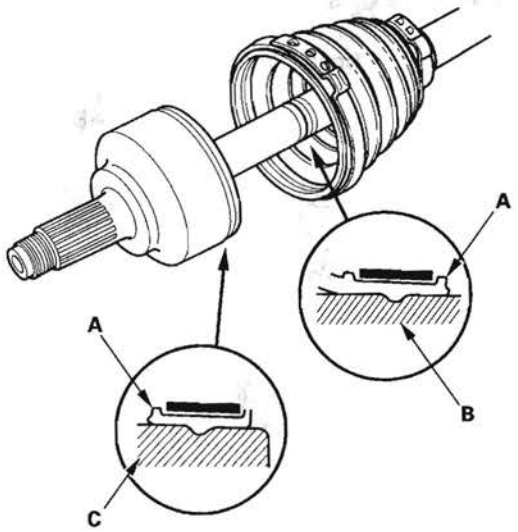

9. Adjust the length of the driveshafts to the figure as shown, then adjust the boots to halfway between full compression and full extension. Make sure the ends of the boots seat in the groove of the driveshaft and joint. Doing this prevents a vacuum or too much air in the boot, preventing it from compressing or extending properly.

Left driveshaft: 647—652 mm (25.5—25.7 in.)

Right driveshaft: 698—703 mm (27.5—27.7 in.)

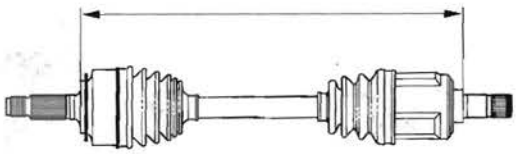

10. Install the new ear clamp band onto the boot (see page 16-10).

11. Repeat step 10 for the band on the other end of the boot.

Rear Driveshaft Installation

NOTE: Before starting installation, make sure the mating surfaces of the joint and the splined section are free from dirt or dust.

1. Install the outboard joint (A) into the rear hub (B).

   NOTE: Be careful not to damage the ABS wheel sensor (C).

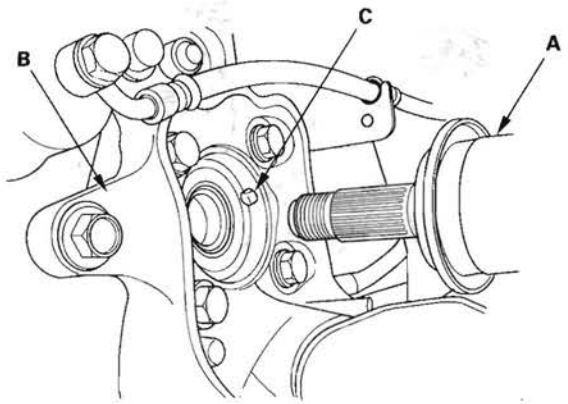

2. Install the rear driveshafts into the rear differential assembly (see step 3 on page 15-35).

3. Apply a small amount of engine oil to the seating surface of the new spindle nut (A).

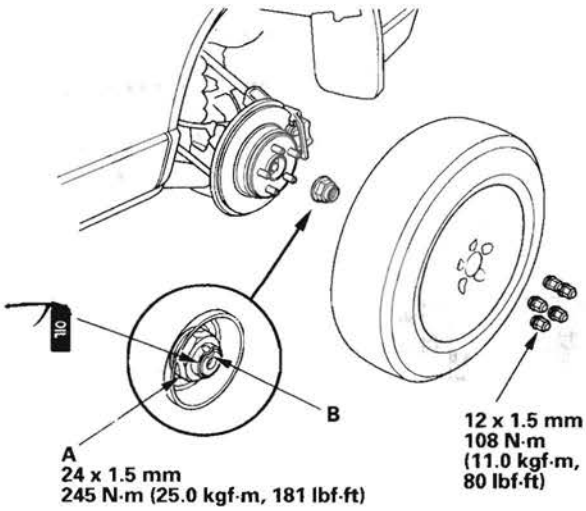

4. Install a new spindle nut, then tighten the nut. After tightening, use a drift to stake the spindle nut shoulder (B) against the driveshaft.

5. Clean the mating surfaces of the brake disc and the rear wheel, then install the rear wheel with the wheel nuts.

6. Turn the rear wheel by hand, and make sure there is no interference between the driveshaft and surrounding parts.

7. Refill the differential fluid (see page 15-21).

Propeller Shaft Inspection

Universal Joint and Boots

1. Set the parking brake, then shift the transmission to the N position.
2. Raise the vehicle on a lift (see page 1-7).
3. Check the center support bearing (A) for excessive play or rattle. If the center support has excessive play or rattle, replace the propeller shaft assembly.

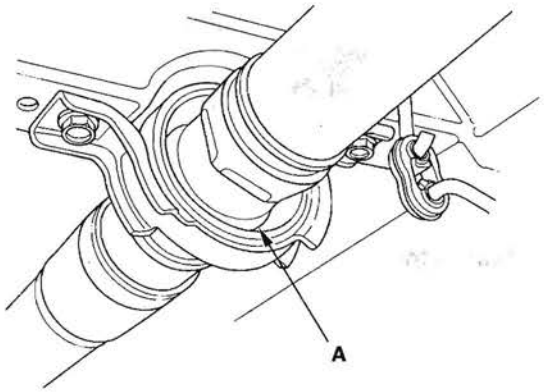

4. Check the universal joint boots for damage and deterioration. If the boots are damaged or deteriorated, replace the propeller shaft assembly.
5. Check the universal joints for excessive play or rattle. If the universal joints have excessive play or rattle, replace the propeller shaft assembly.

Propeller Shaft Runout

6. Install a dial indicator with its needle on the center of No. 1 propeller shaft or No. 2 propeller shaft.
7. Turn the other propeller shaft slowly and check the runout. Repeat this procedure for the other propeller shaft.

No. 1 Propeller Shaft Runout
Service Limit: 1.5 mm (0.06 in.)

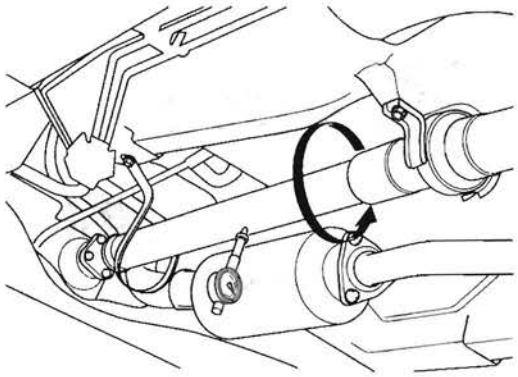

No. 2 Propeller Shaft Runout
Service Limit: 1.5 mm (0.06 in.)

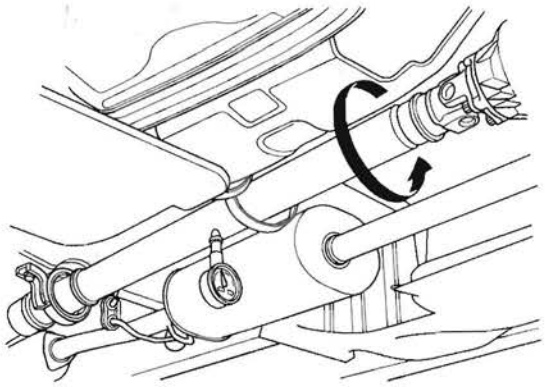

8. If the runout on either propeller shaft exceeds the service limit, replace the propeller shaft assembly.

Propeller Shaft Removal

1. Raise the vehicle on a lift (see page 1-7).
2. Remove the No. 1 propeller shaft protector.

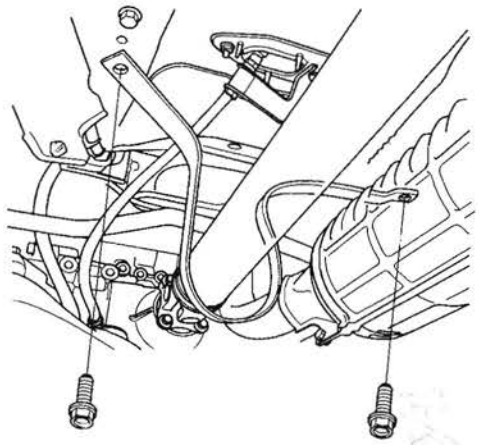

3. Remove the No. 2 propeller shaft protector.

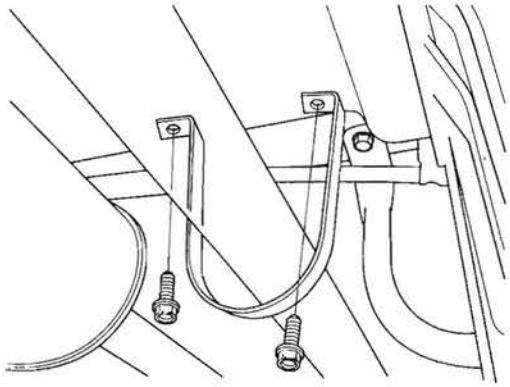

4. Make a reference mark (A) across the No. 1 propeller shaft (B) and transfer companion flange (C).

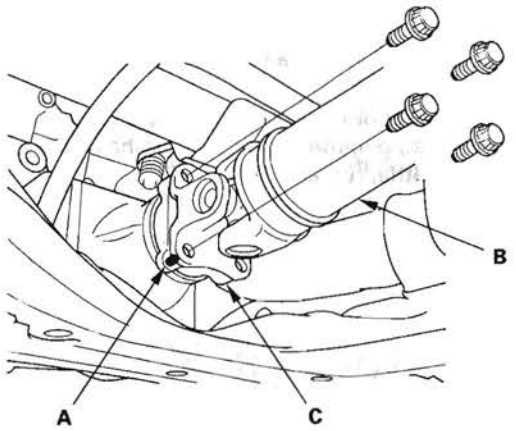

5. Separate the No. 1 propeller shaft from the transfer assembly.
6. Remove the center support bearing mounting bolts.

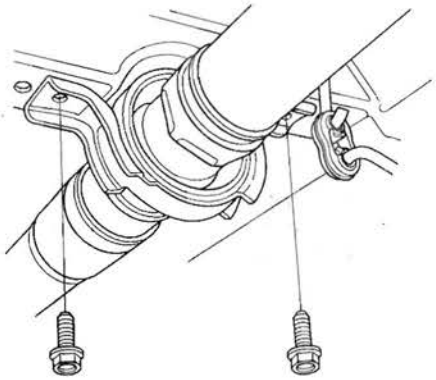

7. Make a reference mark (A) across the No. 2 propeller shaft (B) and rear differential companion flange (C).

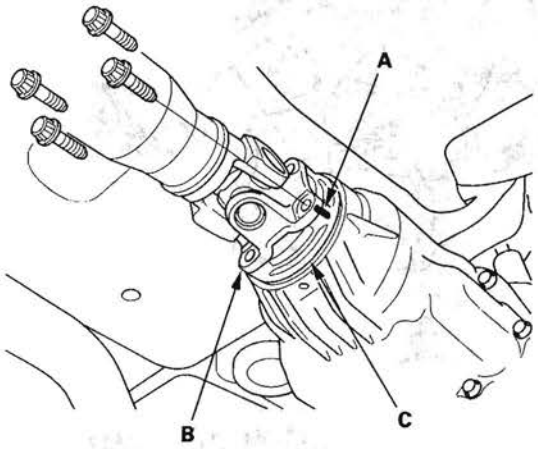

8. Separate the No. 2 propeller shaft from the rear differential, then remove the propeller shaft assembly.

Propeller Shaft Installation

1. Install the No. 2 propeller shaft (A) onto the rear differential (B) by aligning the reference mark (C) you made. Make sure you use new bolts.

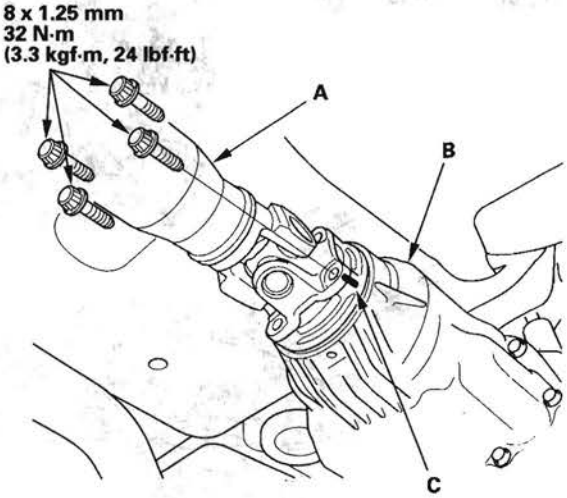

2. Install the center support bearing mounting bolts. Make sure you use new bolts.

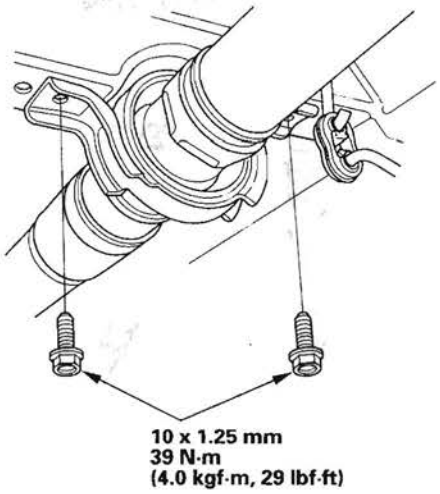

(cont'd)

Propeller Shaft Installation (cont'd)

3. Install the No. 1 propeller shaft (A) onto the transfer companion flange (B) by aligning the reference mark (C) you made. Make sure you use new mounting bolts.

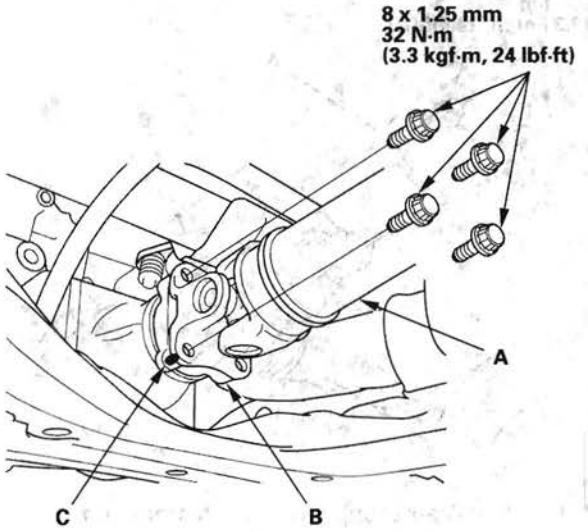

4. Install the No. 2 propeller shaft protector.

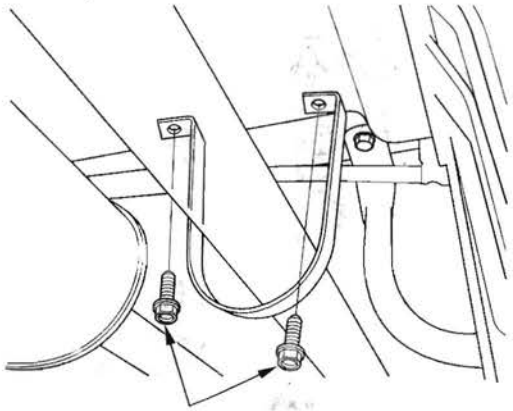

5. Install the No. 1 propeller shaft protector.

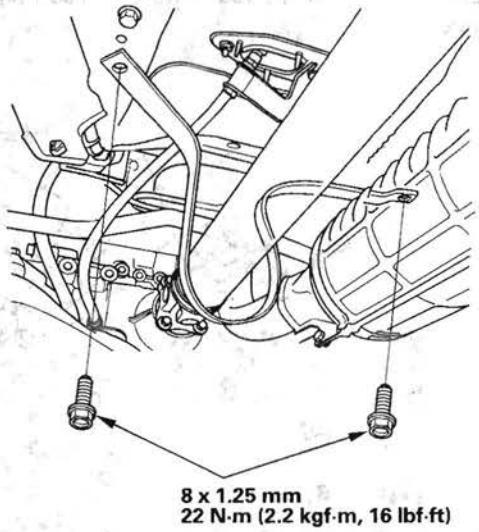

6. If you installed a new propeller shaft assembly, test drive the vehicle at 55 mph (88 km/h), and check for noise or vibration.
   - If there is no noise or vibration, the repair is complete.
   - If there is a noise or vibration, go to step 7.
7. Remove the mounting bolts from the No. 2 propeller shaft at the rear differential companion flange. Note the current alignment of the No. 2 propeller shaft to the rear differential companion flange.
8. Rotate the propeller shaft 180 degrees from its current alignment with the rear differential companion flange.
9. Install new mounting bolts, and tighten them to the specified torque.

SUPPLEMENTAL RESTRAINT SYSTEM (SRS) (If steering maintenance is required)

The CR-V SRS includes a driver's airbag in the steering wheel hub, a passenger's airbag in the dashboard above the glove box, seat belt tensioners in the front seat belt retractors, seat belt buckle tensioners in the front seat belt buckles, side curtain airbags in the sides of the roof, and side airbags in the front seat-backs. Information necessary to safely service the SRS is included in this Service Manual. Items marked with an asterisk (*) on the contents page include or are located near SRS components. Servicing, disassembling, or replacing these items require special precautions and tools, and should be done only by an authorized Honda dealer.

- To avoid rendering the SRS inoperative, which could lead to personal injury or death in the event of a severe frontal or side collision, all SRS service work should be done by an authorized Honda dealer.
- Improper service procedures, including incorrect removal and installation of the SRS, could lead to personal injury caused by unintentional deployment of the airbags and/or side airbags.
- Do not bump or impact the SRS unit, front impact sensors, or side impact sensors when the ignition switch is ON (II), or for at least 3 minutes after the ignition switch is turned OFF; otherwise, the system may fail in a collision, or the airbags may deploy.
- SRS electrical connectors are identified by yellow color coding. Related components are located in the steering column, front console, dashboard, dashboard lower panel, in the dashboard above the glove box, in the front seats, in the roof side, and around the floor. Do not use electrical test equipment on these circuits.

Steering

Power Steering

Special Tools 17-2
Component Location Index 17-3
Symptom Troubleshooting Index 17-4
Symptom Troubleshooting 17-6
Steering Wheel Rotational Play Check 17-7
Power Assist Check 17-7
Steering Linkage and Gearbox Inspection 17-8
Pump Pressure Test with T/N 07406-0010001 17-9
Pump Pressure Test with T/N 07406-001000A or T/N 07406-001A101 17-10
Fluid Leakage Inspection 17-11
Fluid Replacement 17-12
Power Steering Hose, Line, and Pressure Switch Replacement 17-13
Pump Replacement 17-14
Pump Overhaul 17-15
* Steering Wheel Removal 17-22
Steering Wheel Disassembly/Reassembly 17-23
* Steering Wheel Installation 17-24
* Steering Column Removal and Installation 17-25
Steering Column/Tilt/Telescopic/Lock Lever Inspection 17-28
Steering Lock Replacement 17-30
Rack Guide Adjustment 17-31
Steering Gearbox Removal 17-32
Steering Gearbox Overhaul 17-36
Steering Gearbox Installation 17-52
Tie-rod Ball Joint Boot Replacement 17-57
Gearbox Mount Cushion Replacement 17-58

Special Tools

Ref. No.	Tool Number	Description	Qty
①	07HAG-SF1020A or 07HAG-SF10200	Piston Seal Ring Sizing Tool	1
②	07JAF-SH20330	Bushing Base	1
③	07LAG-SM40100	Piston Seal Ring Guide	1
④	07LAG-SM40300	Cylinder End Seal Slider	1
⑤	07MAA-SL00100	Locknut Wrench, 40 mm	1
⑥	07MAC-SL0A202	Ball Joint Remover, 28 mm	1
⑦	07NAG-SR3090A	Valve Seal Ring Sizing Tool	1
⑧	07YAG-S2X0100	Sleeve Seal Ring Guide	1
⑨	07ZAB-S5A0100	Pulley Holder	1
⑩	07ZAG-S5A0100	Sleeve Seal Ring Sizing Tool, 36 mm	1
⑪	07ZAK-S7C0100	P/S Joint Adapter (Pump)	1
⑫	07ZAK-S7C0200	P/S Joint Adapter (Hose)	1
⑬	070AF-S7S0100	Cylinder End Seal Remover Attachment	1
⑭	07406-0010001 or 07406-001000A or 07406-001A101	P/S Pressure Gauge	1
⑮	07749-0010000	Driver	1
⑯	07946-1870100	Attachment, 28 x 30 mm	1

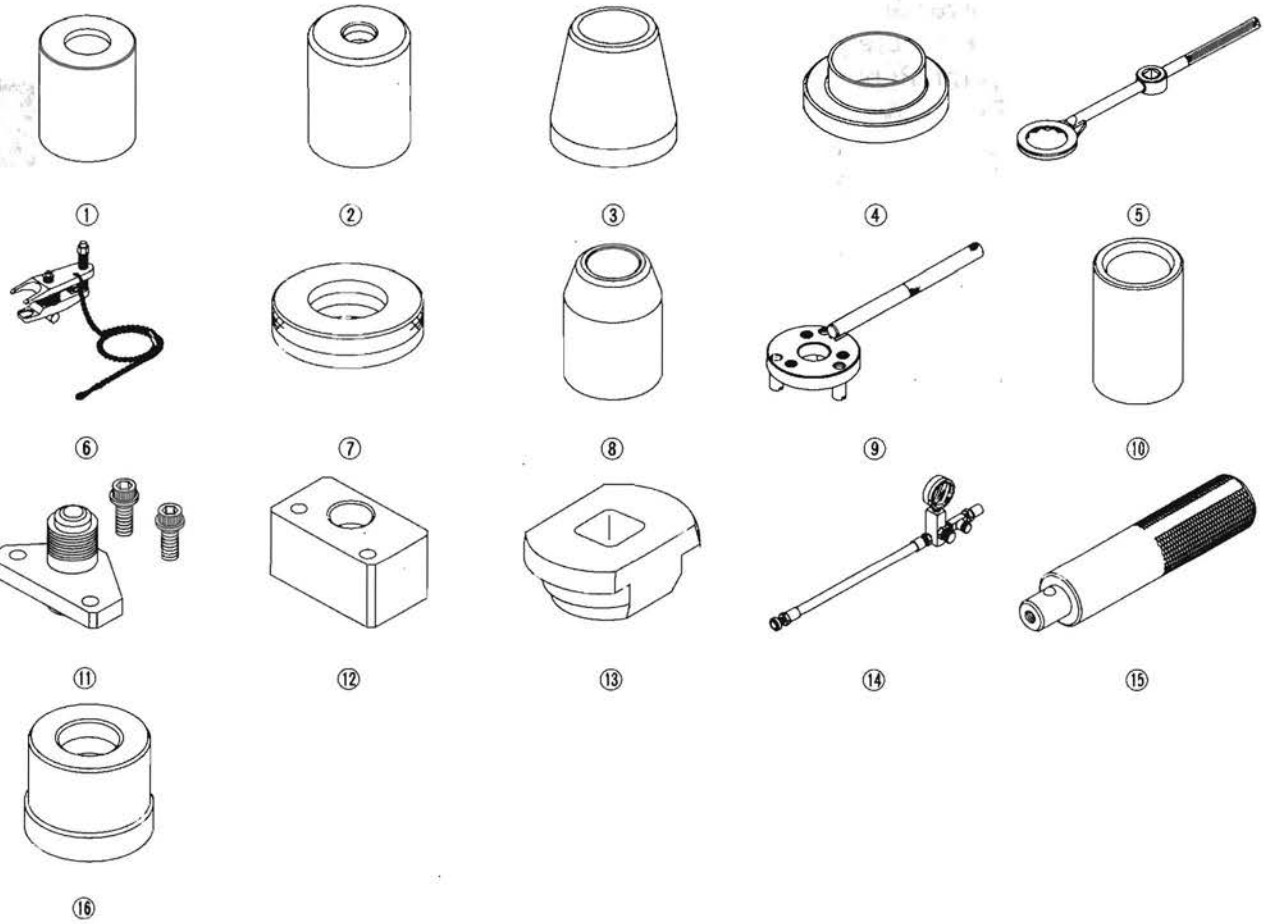

Component Location Index

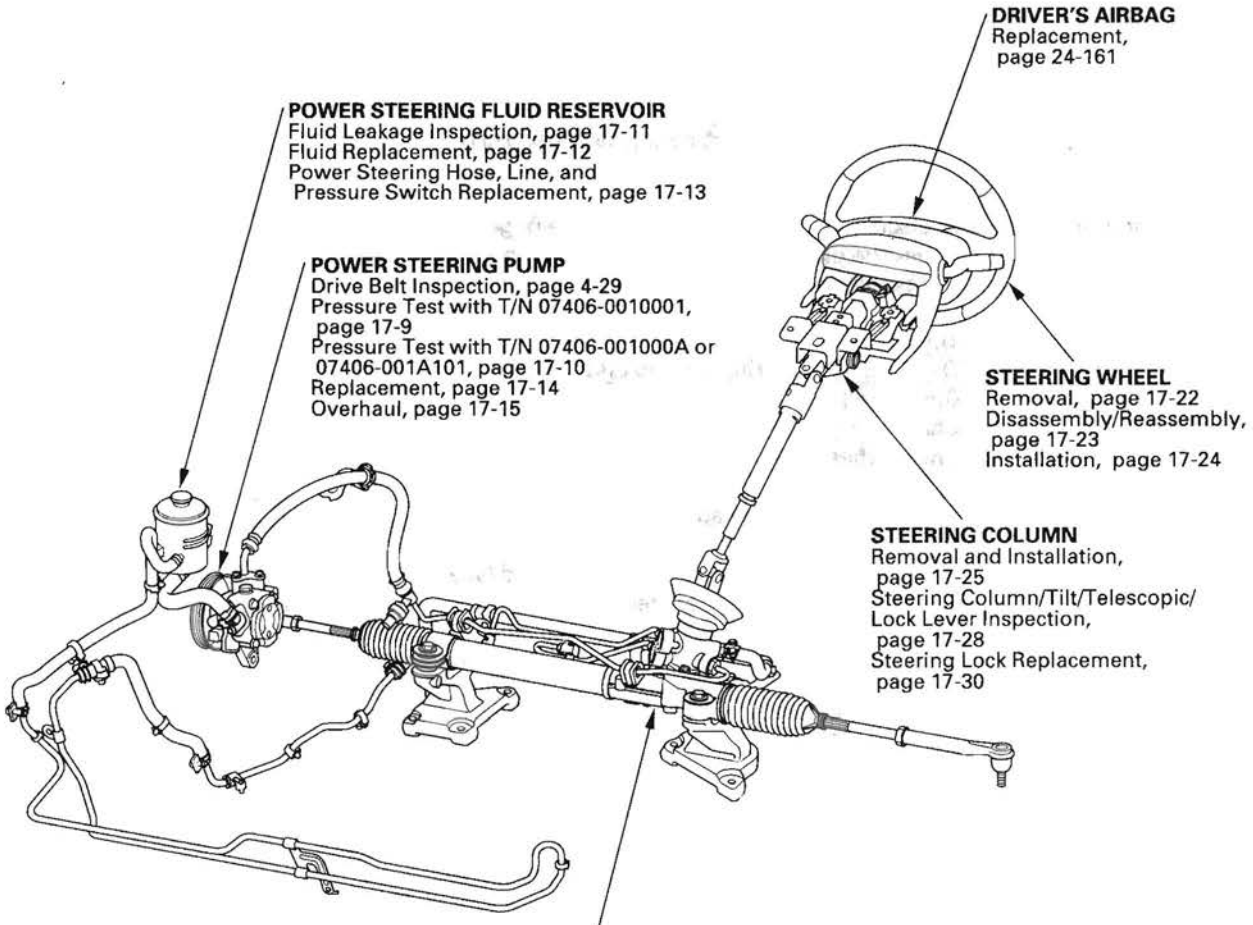

Symptom Troubleshooting Index

Find the symptom in the chart below, and do the related procedures in the order listed until you find the cause.

Symptom	Procedure(s)	Also check for
Hard steering	Troubleshoot the system (see page 17-6).	• Modified suspension • Damaged suspension • Tire sizes, tire varieties, and air pressure
Assist (excessively light steering at high speed)	Check the rack guide adjustment (see page 17-31).	Front wheel alignment (see page 18-5)
Shock or vibration when the steering wheel is turned to full lock	1. Check the rack guide adjustment (see page 17-31). 2. Check the drive belt for slippage (see page 4-29). 3. Check the power steering pump fluid pressure with T/N 07406-0010001 (see page 17-9), T/N 07406-001000A or T/N 07406-001A101 (see page 17-10). 4. Overhaul the steering gearbox (see page 17-36).	
Steering wheel will not return smoothly	1. Check cylinder lines for deformation. 2. Check the ball joints for binding. 3. Check wheel alignment (see page 18-5). 4. Overhaul the steering gearbox (see step 2 on page 17-37).	
Uneven or rough steering	1. Check the rack guide adjustment (see page 17-31). 2. Check the drive belt (see page 4-29). 3. Check for low or erratic engine idle speed (see page 11-303). 4. Check for air in the power steering system due to air entering inlet side of pump. 5. Check for low fluid level in the power steering reservoir due to possible leaks in system (see page 17-12). 6. Overhaul the steering gearbox (see step 2 on page 17-37).	
Steering wheel kicks back during wide turns	1. Check the drive belt (see page 4-29). 2. Check the power steering pump fluid pressure with T/N 07406-0010001 (see page 17-9), T/N 07406-001000A or T/N 07406-001A101 (see page 17-10).	
Humming noise from the power steering system	1. Check when the noise occurs: • If the noise is heard 2—3 minutes after starting the engine in cold weather, this is normal. • If the noise is heard when the wheel is turned with the vehicle stopped, this is normal due to the fluid pulsation. 2. Check for the high-pressure hose touching the subframe or body. 3. Check for automatic transmission converter noise. 4. Check for air bubbles in the power steering fluid, leak on inlet side of pump. 5. Check for particle contamination of fluid and restricted filter in the reservoir.	Pump pressure
Power steering rack rattle or chattering	1. Check for loose steering components (tie-rod and ball joints). Tighten or replace as necessary. 2. Check the steering column shaft for wobbling. If the steering column wobbles, replace the steering column assembly (see page 17-25). 3. Check the rack guide adjustment (see page 17-31). 4. Check the power steering pump pulley: • If the pulley is loose, tighten it (see step 46 on page 17-21). • If the pump shaft is loose, replace the pump (see page 17-14).	

Symptom	Procedure(s)	Also check for
Hissing from the power steering system/foaming fluid	• Check the fluid level. If low, fill the reservoir to the proper level and check for leaks (see page 17-12). • Check the reservoir for leaks. • Check for crushed inlet hose or loose hose clamp allowing air into the suction side of the system (see page 17-13). • Check the power steering pump shaft oil seal for leaks.	Air in the P/S fluid
Noise from the power steering pump	• Compare the pump noise at normal operating temperature to another like vehicle (pump noise for 2—3 minutes after starting the engine in cold weather is normal). • Remove and inspect the pump for wear and damage (see page 17-14).	• P/S pump pressure • Air in the P/S fluid
Squeaking from the power steering pump	Check the drive belt (see page 4-29).	
Fluid leaks from the steering gearbox	• Fluid leaks from the top of the valve body unit. Overhaul the valve body unit (see step 19 on page 17-40). • Fluid leaks from the driver's side boot. Replace the valve oil seal on the pinion shaft. Replace the cylinder end seal on the gearbox side. • Fluid leaks from the passenger's side boot. Replace the cylinder end seal on the cylinder side. • Fluid leaks from pinion shaft near the lower steering joint bolt. Overhaul the valve body unit (see step 19 on page 17-40). • Fluid leaks from the steering damping valve covers on the valve body unit. Replace the valve housing.	
Fluid leaks from the power steering line	• Fluid leaks from the cylinder line connections (flare nuts). Tighten the connection and retest (see page 17-13). • Fluid leaks from a damaged cylinder lines. Replace the cylinder line (see page 17-13). • Fluid leaks from the pump outlet hose or return line fitting on the valve body unit (flare nuts). Tighten the fitting and retest. If it still leaks, replace the hose, the line, or valve body unit as necessary.	
Fluid leaks from the power steering pump	• Fluid leaks from the front oil seal. Replace the front oil seal. • Fluid leaks from the power steering pump housing. Replace the leaking O-rings or seals (see page 17-15), and if necessary replace the power steering pump (see page 17-14).	
Fluid leaks from the power steering reservoir	• Fluid leaks from around the reservoir cap because fluid level is too high. Drain the reservoir to the proper level. If the fluid is aerated check for an air leak on the inlet side of pump. • Fluid leaks from reservoir. Check for the reservoir for cracks and replace as necessary.	
Fluid leaks from the power steering pump outlet hose (high-pressure)	• Check the fitting for loose bolts. If the bolts are tight, replace the fitting O-ring. • Fluid leaks at the swagged joint. Replace the pump outlet hose.	
Fluid leaks from the power steering pump inlet hose (low-pressure)	Check the hose for damage, deterioration, or improper assembly. Replace or repair as necessary.	

Symptom Troubleshooting

Hard Steering

1. Check the power assist (see page 17-7).

   Is the initial turning load more than 34 N (3.5 kgf, 7.7 lbf)?

   YES—Go to step 2.
   NO—Power assist is OK. ■

2. Connect the P/S joint adapter (pump), P/S joint adapter (hose), and P/S pressure gauge T/N 07406-0010001 (see page 17-9), T/N 07406-001000A or T/N 07406-001A101 (see page 17-10) to the pump.

3. Measure steady-state fluid pressure from the pump at idle.

   Is the pressure 1,470 kPa (15 kgf/cm², 213 psi) or less?

   YES—Go to step 4.
   NO—Go to step 8.

4. Measure the pump relief pressure at idle.

   Is the pressure 7,350–8,050 kPa (75–82 kgf/cm², 1,070–1,170 psi) or more?

   YES—Go to step 5.
   NO—Go to step 9.

5. With a spring scale, measure the power assist in both directions, to the left and to the right.

   Are the two measurements within 5.0 N (0.51 kgf, 1.12 lbf) of each other?

   YES—Go to step 6.
   NO—Go to step 11.

6. Measure the fluid pressure with both pressure gauge valves open (if so equipped), while turning the steering wheel fully to the left and fully to the right.

   Is the pressure 7,350–8,050 kPa (75–82 kgf/cm², 1,070–1,170 psi) or more?

   YES—Go to step 7.
   NO—Faulty steering gearbox. ■

7. Adjust the rack guide (see page 17-31), and retest.

   Is the steering OK?

   YES—Repair is completed. ■
   NO—Faulty steering gearbox. ■

8. Check the outlet and return hoses and lines between the pump and the steering gearbox for clogging and deformation.

   Are the lines clogged or deformed?

   YES—Repair or replace the lines. ■
   NO—Faulty valve body unit. ■

9. Disassemble the pump (see page 17-15).

10. Check the pressure control valve for smooth movement and leaks (see step 16 on page 17-17).

    Is the pressure control valve OK?

    YES—Faulty pump assembly. ■
    NO—Faulty pressure control valve. ■

11. Check the cylinder lines for deformation (see page 17-13).

    Are any of the lines deformed?

    YES—Replace the deformed line. ■
    NO—Go to step 12.

12. Check for a bent rack shaft or misadjusted rack guide (too tight).

    Is the rack shaft bent or the rack guide adjusted too tight?

    YES—Replace the rack shaft, or readjust the rack guide. ■
    NO—Faulty valve body unit. ■

Steering Wheel Rotational Play Check

1. Turn the front wheels to the straight ahead position.
2. Measure how far you can turn the steering wheel left and right without moving the front wheels.
   - If the play is within the limit, the steering gearbox and linkages are OK.
   - If the play exceeds the limit, adjust the rack guide (see page 17-31). If the play is still excessive after rack guide adjustment, inspect the steering linkage and steering gearbox (see page 17-8).

Rotational play: 0—10 mm (0—0.39 in.)

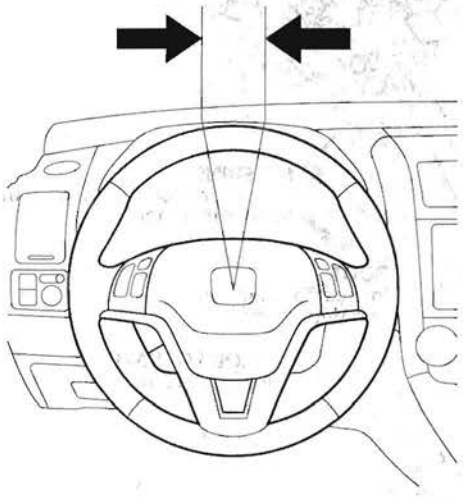

Power Assist Check

NOTE: This test should be done with original equipment tires and wheels at the correct tire pressure.

1. Check the power steering fluid level (see page 17-12).
2. Start the engine, let it idle, and turn the steering wheel from lock-to-lock several times to warm up the fluid.
3. Attach a commercially available spring scale to the steering wheel. With the engine idling and the vehicle on a clean, dry floor, pull the scale as shown and read it as soon as the tires begin to turn.
   - If the scale reads no more than the specification, the steering gearbox and pump are OK.
   - If the scale reads more than the specification, troubleshoot the steering system (see page 17-6).

Initial turning load: 34 N (3.5 kgf, 7.7 lbf)

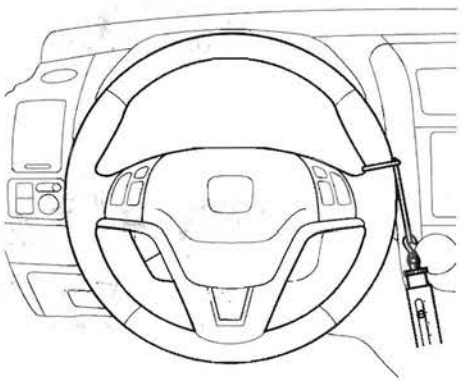

Steering Linkage and Gearbox Inspection

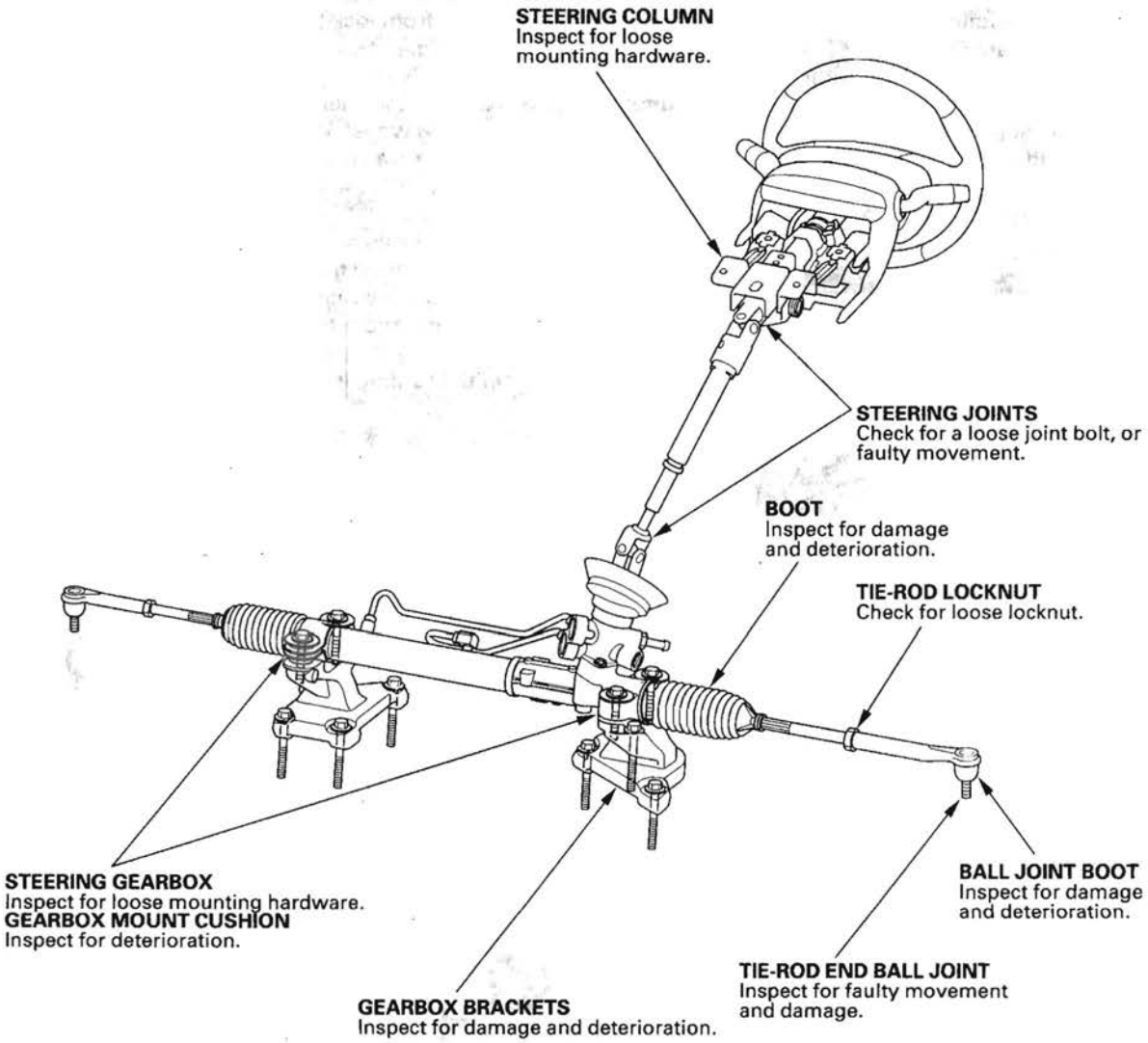

Pump Pressure Test with T/N 07406-0010001

Special Tools Required
- P/S joint adapter (pump) 07ZAK-S7C0100
- P/S joint adapter (hose) 07ZAK-S7C0200
- P/S pressure gauge 07406-0010001

Check the fluid pressure as follows to determine whether the trouble is in the pump or steering gearbox.

1. Check the power steering fluid level (see page 17-12).

2. Disconnect the pump outlet hose (A) from the pump outlet with care so as not to spill the power steering fluid on the frame and other parts, then install the P/S joint adapter (pump) on the pump outlet (B).

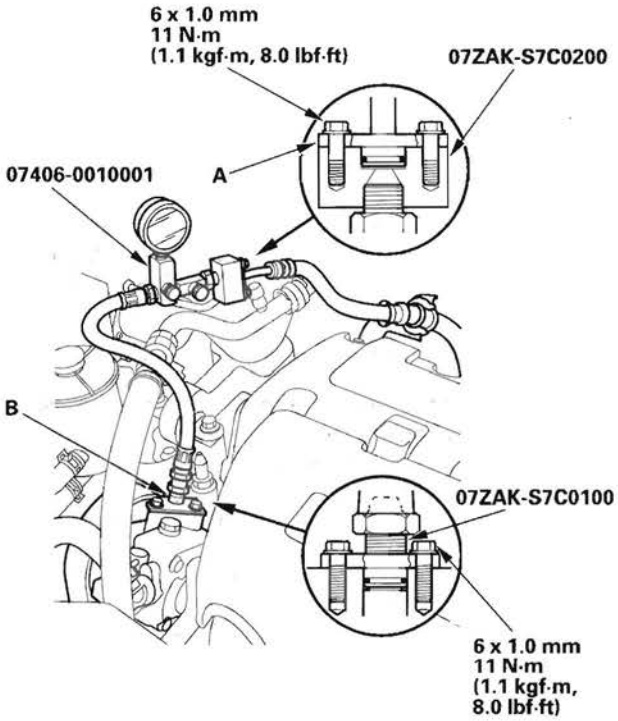

3. Connect the P/S joint adapter (hose) to the P/S pressure gauge, then connect the pump outlet hose to the P/S joint adapter (hose).

4. Install the P/S pressure gauge to the P/S joint adapter (pump).

5. Fully open the shut-off valve (A).

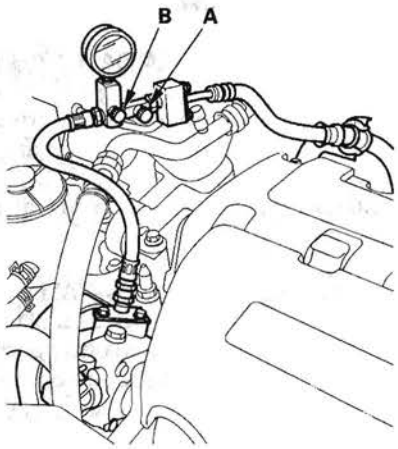

6. Fully open the pressure control valve (B).

7. Start the engine, and let it idle.

8. Turn the steering wheel from lock-to-lock several times to warm the fluid to operating temperature at 158 °F (70 °C).

9. Measure steady-state fluid pressure while the engine is idling. If the pump is in good condition, the gauge should read no more than 1,470 kPa (15 kgf/cm², 213 psi).
   If it reads high, check for:
   - Clogged or deformed feed or return line between the pump and the steering gearbox.
   - Clogged valve body unit.

10. Close the shut-off valve, then close the pressure control valve gradually until the pressure gauge needle is stable. Read the pressure.

NOTICE
Do not keep the shut-off valve closed more than 5 seconds or the pump could be damaged by overheating.

11. Immediately open the shut-off valve fully.
    If the pump is in good condition, the gauge should read at least 7,350—8,050 kPa (75—82 kgf/cm², 1,070—1,170 psi). A low reading means pump output is too low for full assist. Repair or replace the pump.

Pump Pressure Test with T/N 07406-001000A or T/N 07406-001A101

Special Tools Required
- P/S joint adapter (pump) 07ZAK-S7C0100
- P/S joint adapter (hose) 07ZAK-S7C0200
- P/S pressure gauge 07406-001000A or 07406-001A101

Check the fluid pressure as follows to determine whether the trouble is in the pump or steering gearbox.

1. Check the power steering fluid level (see page 17-12).

2. Disconnect the pump outlet hose (A) from the pump outlet with care so as not to spill the power steering fluid on the frame and other parts, then install the P/S joint adapter (pump) on the pump outlet (B).

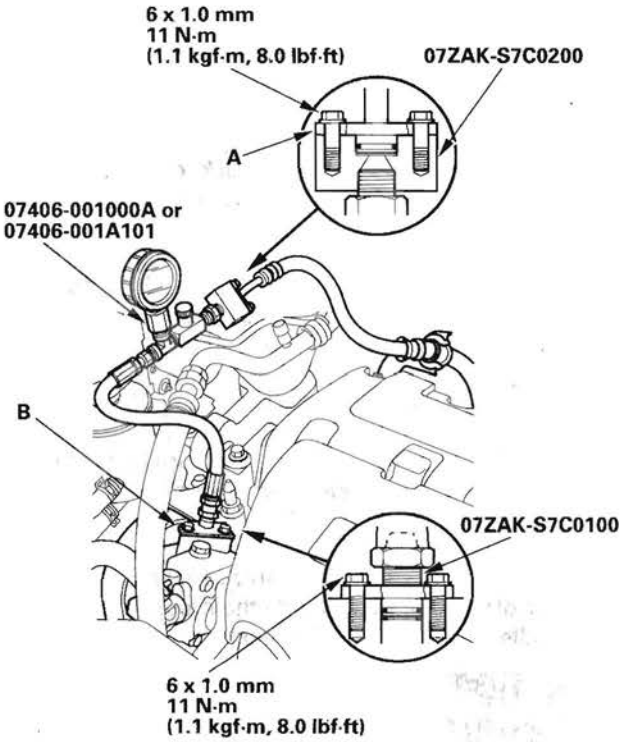

3. Connect the P/S joint adapter (hose) to the P/S pressure gauge, then connect the pump outlet hose to the P/S joint adapter (hose).

4. Install the P/S pressure gauge to the P/S joint adapter (pump).

5. Open the shut-off valve (A) fully.

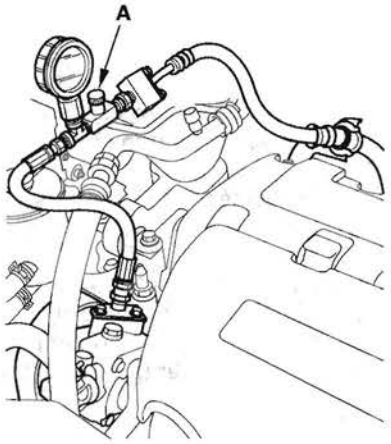

6. Start the engine, and let it idle.

7. Turn the steering wheel from lock-to-lock several times to warm the fluid to operating temperature at 158 °F (70 °C).

8. Measure steady-state fluid pressure while the engine is idling. If the pump is in good condition, the gauge should read no more than 1,470 kPa (15 kgf/cm², 213 psi).
   If it reads high, check for:

   - Clogged or deformed feed or return line between the pump and the steering gearbox.
   - Clogged valve body unit.

9. Close the shut-off valve gradually, and read the pressure.

   NOTICE
   Do not keep the shut-off valve closed more than 5 seconds or the pump could be damaged by overheating.

10. Immediately open the shut-off valve fully.
    If the pump is in good condition, the gauge should read at least 7,350—8,050 kPa (75—82 kgf/cm², 1,070—1,170 psi). A low reading means pump output is too low for full assist. Repair or replace the pump.

Fluid Leakage Inspection

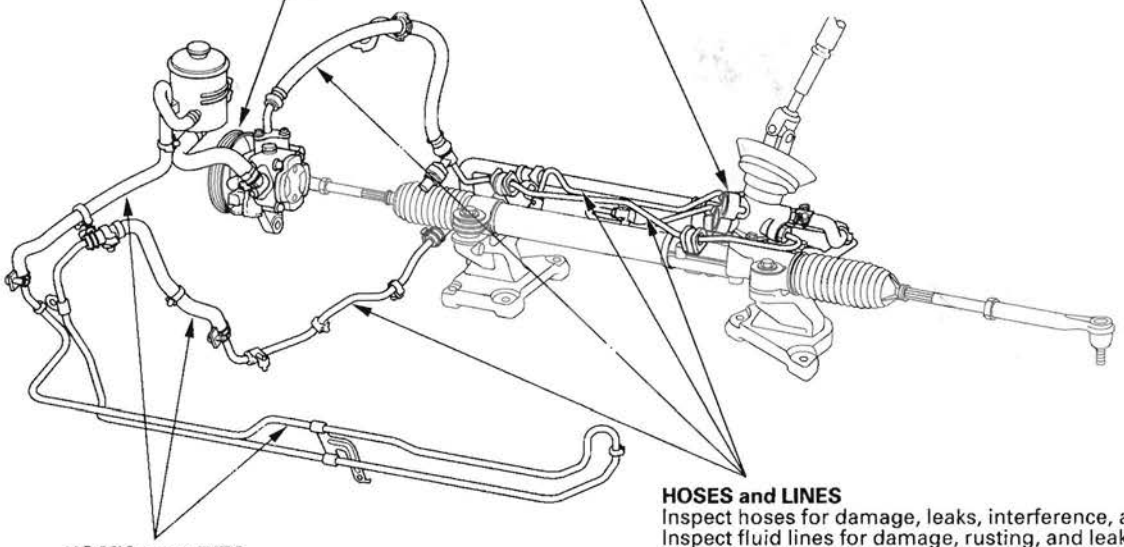

Fluid Replacement

Check the reservoir (A) at regular intervals, and add the recommended fluid as necessary. Always use Honda Power Steering Fluid. Using any other type of power steering fluid or automatic transmission fluid can cause increased wear and poor steering in cold weather.

NOTE: If the fluid is contaminated, the screen in the reservoir may be partially blocked. Replace the reservoir if necessary.

System capacity:
0.99 L (1.05 US. qt) at disassembly
Reservoir capacity:
0.29 L (0.31 US. qt)

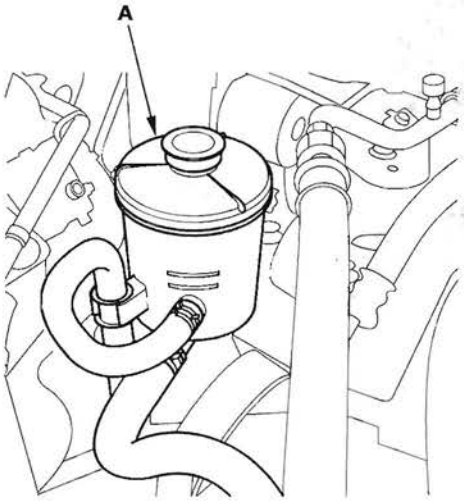

1. Remove the reservoir from its holder. Raise the reservoir, then disconnect the return hose (A) to drain the reservoir. Take care not to spill the fluid on the body and parts. Wipe off any spilled fluid at once.

   NOTE: Inspect the reservoir screen for any debris. If the reservoir screen is clogged, replace the reservoir.

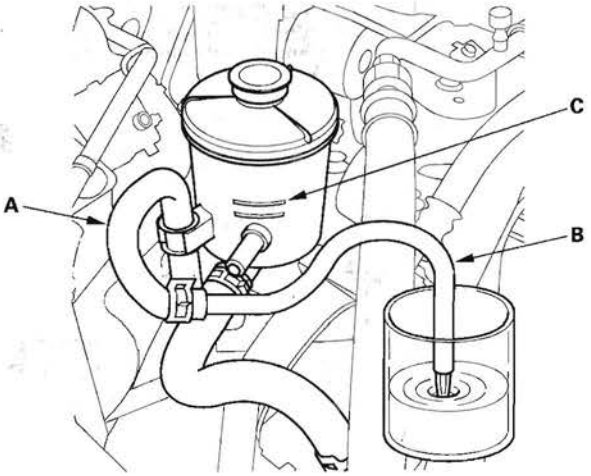

2. Connect a hose (B) of suitable diameter to the disconnected return hose, and put the hose end in a suitable container.
3. Start the engine, let it run at idle, and turn the steering wheel from lock-to-lock several times. When fluid stops running out of the hose, shut off the engine. Discard the fluid.
4. Reinstall the return hose on the reservoir.
5. Fill the reservoir to the upper level line (C).
6. Start the engine and run it at fast idle, then turn the steering from lock-to-lock several times to bleed air from the system.
7. Recheck the fluid level and add some if necessary. Do not fill the reservoir beyond the upper level line.
8. If the fluid is contaminated, dark, or discolored, repeat the procedure as necessary.

Power Steering Hose, Line, and Pressure Switch Replacement

Note these items during installation:

- Connect each hose to the corresponding line securely until it contacts the stop on the line. Install the clamp or adjustable clamp at the specified distance from the hose end as shown.
- Check all clamps for deterioration or deformation; replace the clamps with new ones if necessary.
- Add the recommended power steering fluid to the specified level on the reservoir and check for leaks.

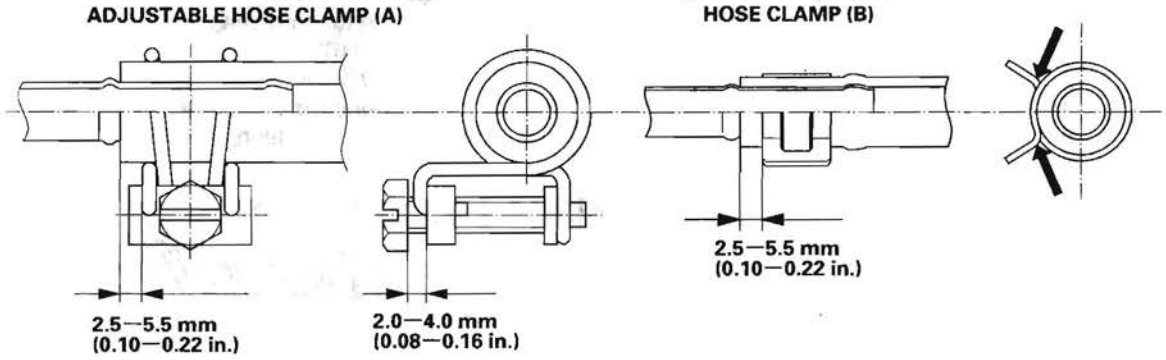

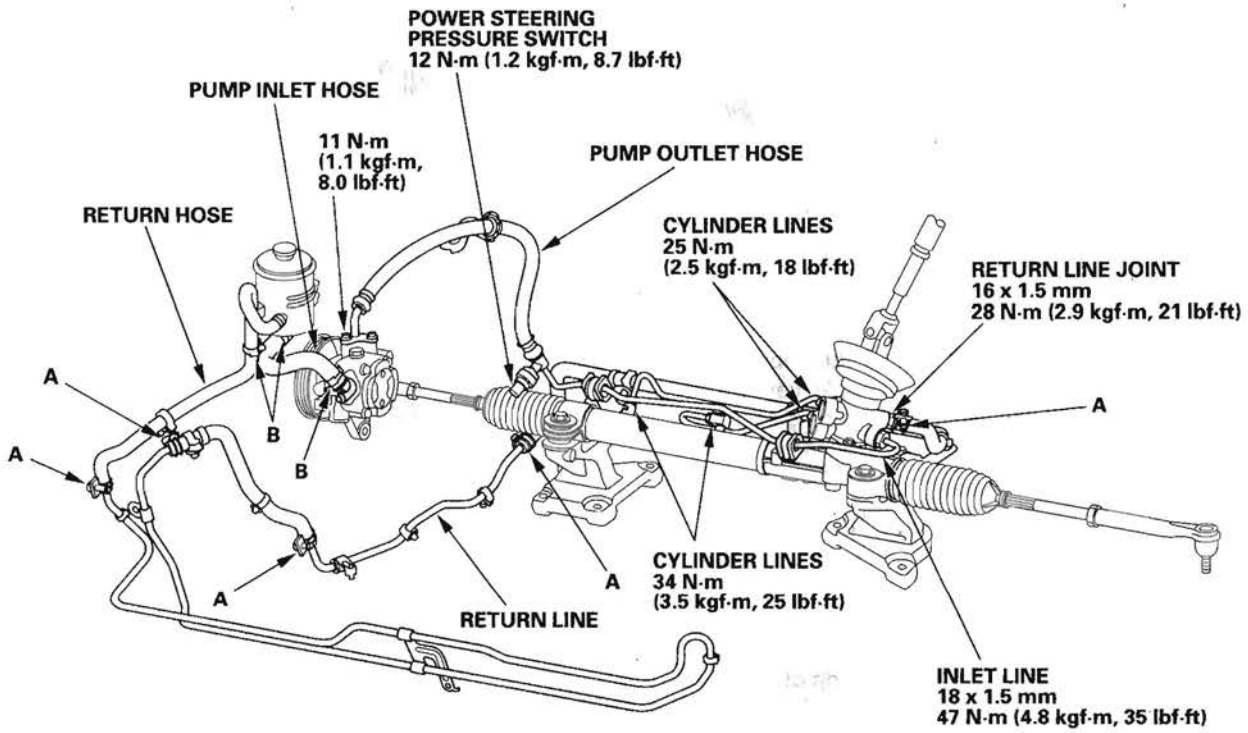

Pump Replacement

1. Place a suitable container under the vehicle.
2. Drain the power steering fluid from the reservoir (see page 17-12).
3. Remove the drive belt (A) from the pump pulley (see page 4-29).

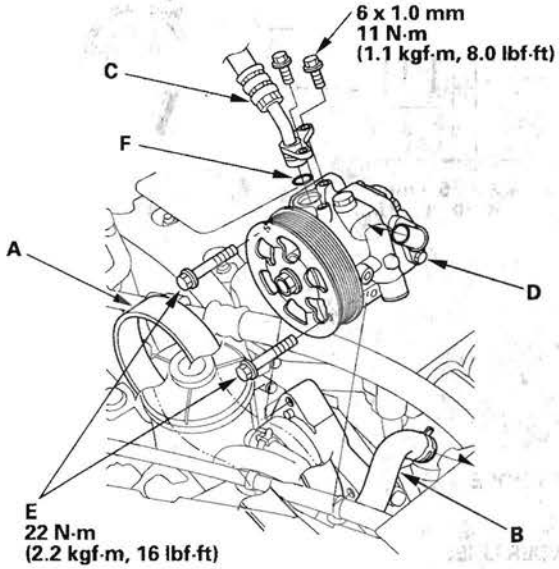

4. Cover the auto-tensioner, alternator, and A/C compressor with several shop towels to protect them from spilled power steering fluid. Disconnect the pump inlet hose (B) and pump outlet hose (C) from the pump (D), and plug them. Take care not to spill the fluid on the body or parts. Wipe off any spilled fluid at once. Do not turn the steering wheel with the pump removed.
5. Remove the pump mounting bolts (E).
6. Cover the opening of the pump with a piece of tape to prevent foreign material from entering the pump.
7. Connect the pump inlet hose and pump outlet hose onto the new pump with a new O-ring (F).
8. Loosely install the pump in the pump bracket with the mounting bolts, then tighten the pump fittings securely.
9. Tighten the pump mounting bolts to the specified torque.
10. Install the drive belt (A).

    Note these items during belt installation:
    - Make sure that the belt is properly positioned on the pulleys (B).
    - Do not get power steering fluid or grease on any parts around the power steering pump, drive belt, or pulley faces. Clean off any fluid or grease before installation.

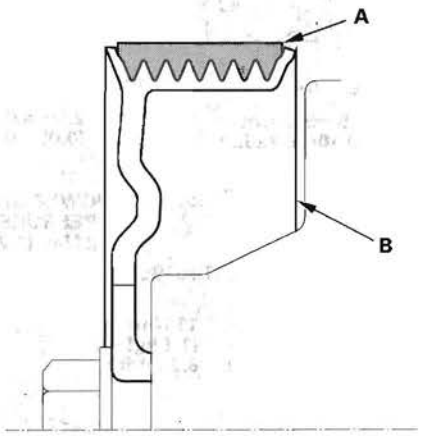

11. Fill the reservoir to the upper level line (see page 17-12).

Pump Overhaul

Exploded View

Replace the pump as an assembly if the parts indicated with asterisk (*) are worn or damaged.

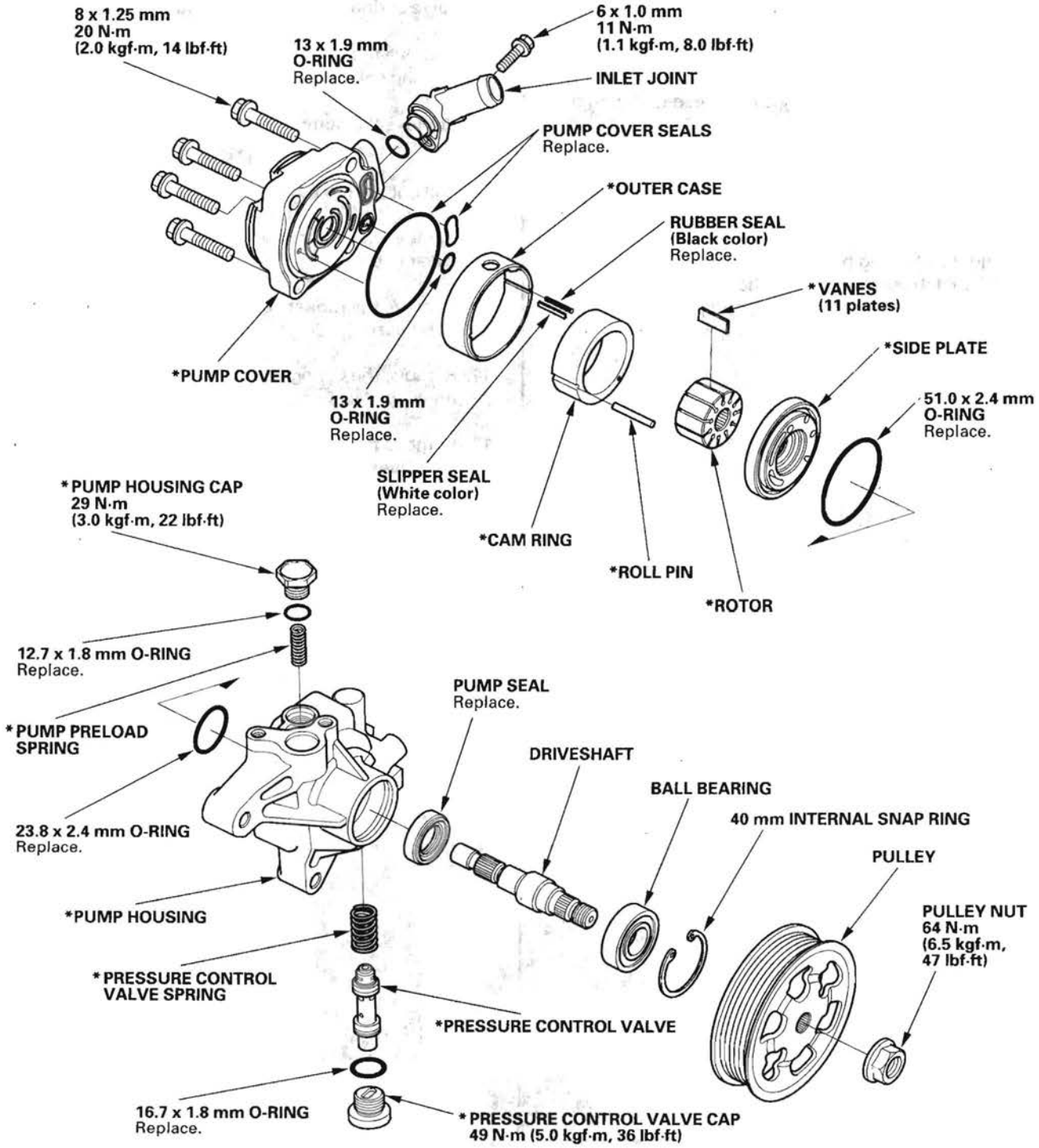

(cont'd)

Pump Overhaul (cont'd)

Special Tools Required
- Driver 07749-0010000
- Attachment, 28 x 30 mm 07946-1870100
- Pulley holder 07ZAB-S5A0100

Disassembly

NOTE: Refer to the Exploded View as needed during the following procedure.

1. Drain the fluid from the pump (see page 17-12).
2. Remove the power steering pump (see page 17-14).
3. Hold the steering pump (A) in a vise with soft jaws (B), hold the pulley (C) with the pulley holder (D), and remove the pulley nut (E) and pulley. Be careful not to damage the pump housing with the jaws of the vise.

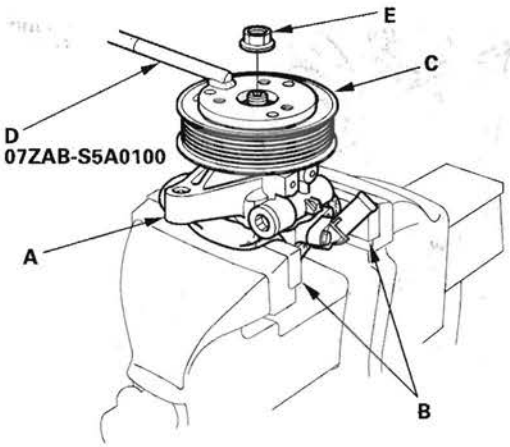

4. Remove the inlet joint and O-ring.
5. Remove the pressure control valve cap, O-ring, valve spring, and pressure control valve.
6. Remove the pump housing cap, O-ring, and pump preload spring.
7. Remove the pump cover, O-ring, and pump cover seals.
8. Pull out the roll pin.
9. Remove the outer case, cam ring, rotor, vanes, and side plate.
10. Remove the rubber seal and slipper seal from the outer case.
11. Remove the O-rings from the bottom of the housing.
12. Remove the 40 mm internal snap ring, then remove the driveshaft by tapping the shaft end with a plastic hammer.
13. Remove the pump seal from the pump housing.

Inspection

14. Check the pressure control valve for wear, burrs, and other damage to the edges of the grooves in the valve.

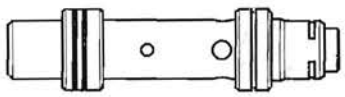

15. Inspect the bore of the pressure control valve on the pump housing for scratches and wear.

16. Slip the pressure control valve back in the pump housing, and check that it moves in and out smoothly. If OK, go to step 17; if not, replace the pump as an assembly. The pressure control valve is not available separately.

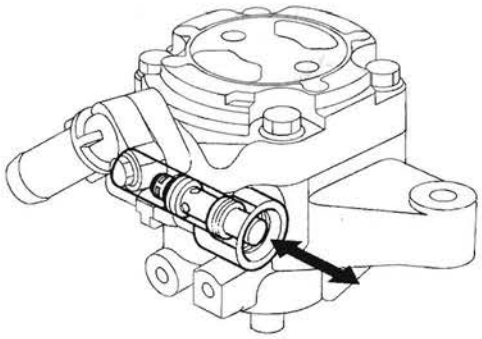

17. Attach a hose (A) to the end of the pressure control valve (B) as shown. Then submerge the pressure control valve in a container of power steering fluid or solvent (C), and blow in the hose.

    - If air bubbles leak through the valve at less than 98 kPa (1.0 kgf/cm², 14.2 psi), replace the pump as an assembly. The pressure control valve is not available separately.
    - If the pressure control valve is OK, set it aside for reassembly later.

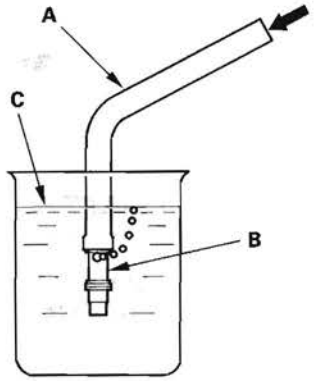

18. Inspect the ball bearing by rotating the outer race slowly. If you feel any play (axial or radial) or roughness, remove the faulty ball bearing (A), and install a new one (B).

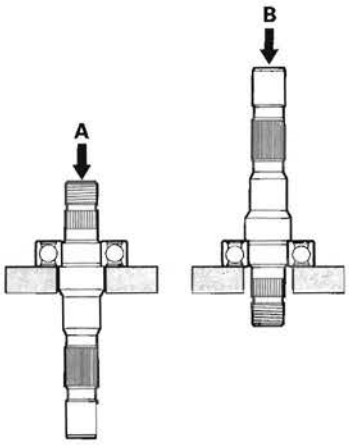

19. Inspect each part shown with an asterisk in the Exploded View; if any of them are worn or damaged, replace the pump as an assembly.

(cont'd)

Pump Overhaul (cont'd)

Reassembly

20. Install the new pump seal (A) (with its grooved side facing in) into the pump housing (B) by hand, then drive it in using the driver until the seal is fully seated in the pump housing. Do not apply more than 1,370 N (140 kgf, 308 lbf) of pressure.

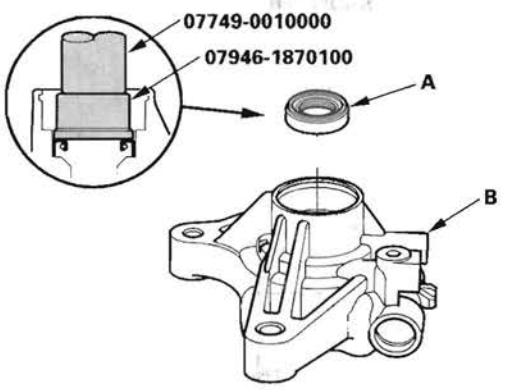

21. Position the pump driveshaft (A) in the pump housing, then press it in with the appropriate size socket wrench (B) as shown.

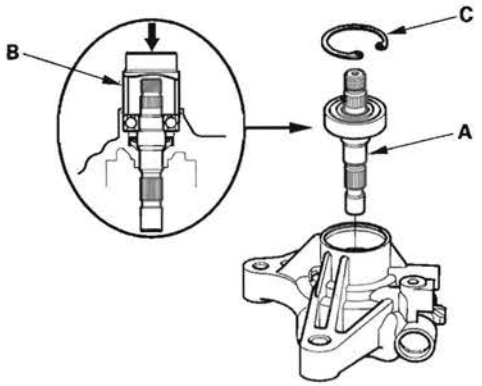

22. Install the 40 mm internal snap ring (C) with its radiused edge facing out.

23. Coat the new 23.8 mm O-ring (A) with power steering fluid, then position it on the bottom (B) of the pump housing.

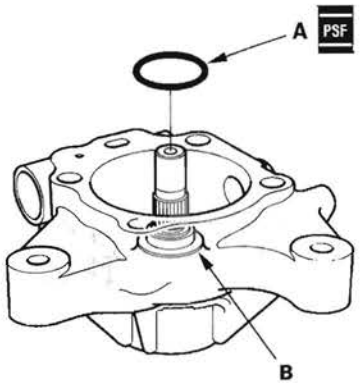

24. Coat the new cover seals (A) and new 13.0 mm O-ring (B) with power steering fluid, then position them into the grooves on the cover (C).

NOTE: Be careful not to install the inlet joint O-ring because they are the same size.

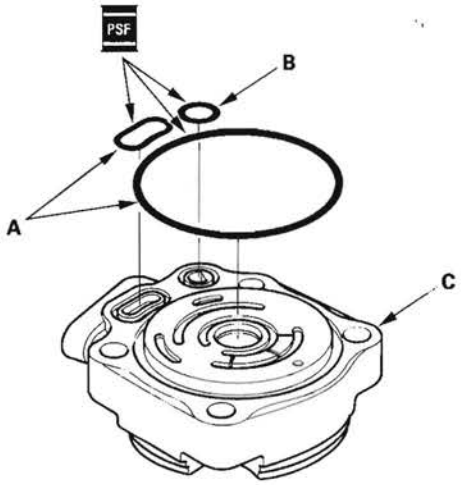

25. Install the outer case (A) by aligning the slot (B) inside the outer case with the cover roll pin hole (C). Be sure that the tapered side (D) of outer case is facing up.

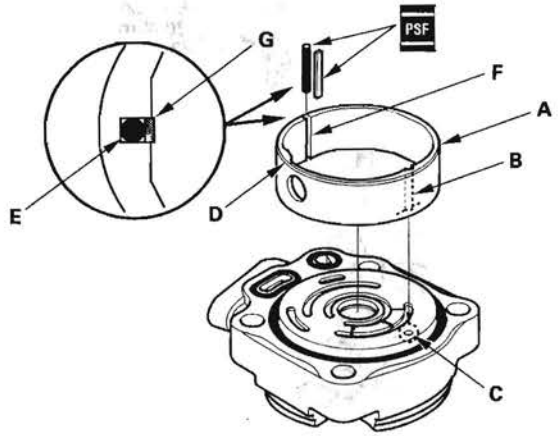

26. Apply power steering fluid to the rubber seal (E) (black), and install it in the slot (F) of the outer case.

27. Apply power steering fluid to the slipper seal (G) (white), and install it on top of the rubber seal you just installed.

28. Install the cam ring (A) by aligning the slot (B) with the slot (C) in the outer case.

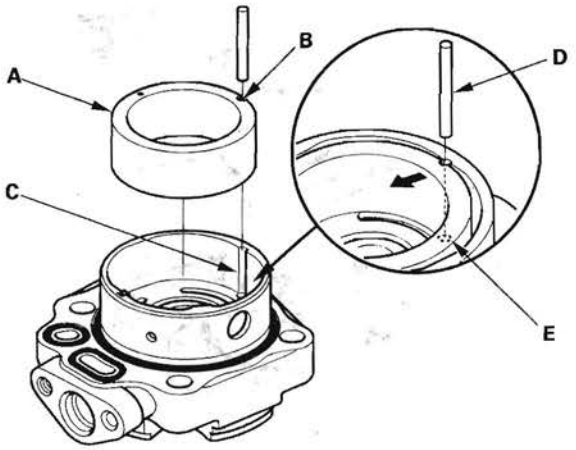

29. Insert the roll pin (D) into the slots between the cam ring and outer case, then push the roll pin into the set hole (E).

30. Install the rotor (A) in the cam ring (B).

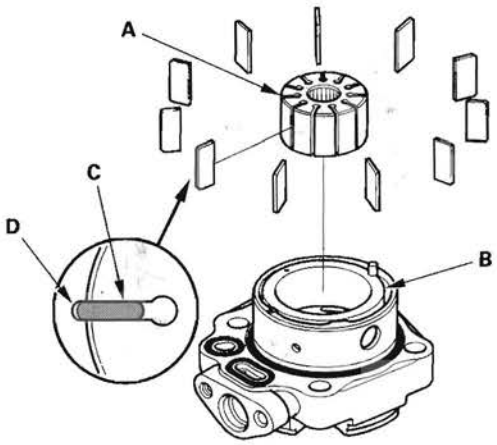

31. Set the 11 vanes (C) in the grooves in the rotor. Make sure that the gold-colored ends (D) of the vanes are in contact with the sliding surface of the cam ring.

(cont'd)

Pump Overhaul (cont'd)

32. Place the side plate (A) on the cam ring, and align the roll pin set hole (B) with the roll pin (C).

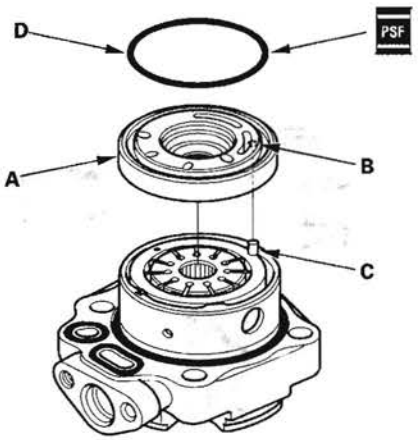

33. Coat the new O-ring (D) with power steering fluid, then position it into the groove on the side plate.

34. Install the pump housing (A) over the cover assembly (B).

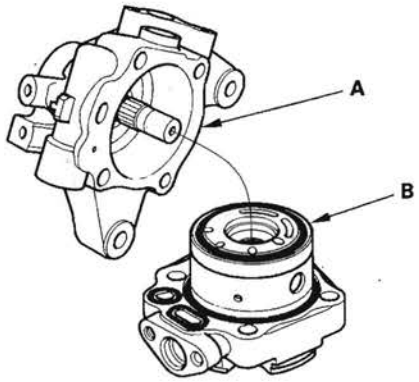

35. Align the bolt holes in the cover (A) with the threaded holes in the pump housing. Install the flange bolts loosely first, then torque the flange bolts in a criss-cross pattern in two or more steps.

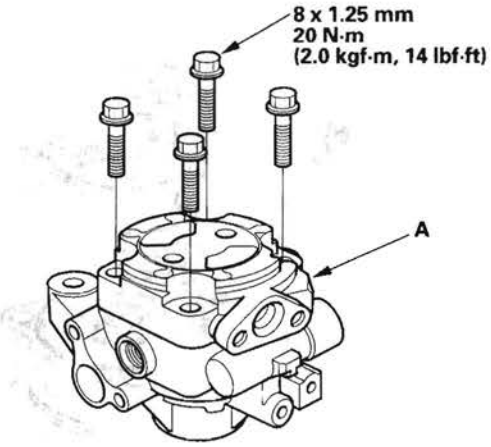

36. Push in the cam ring (A) from the pump housing cap hole (B) with a flat-tip screwdriver to make sure the cam ring is fully seated against the outer case.

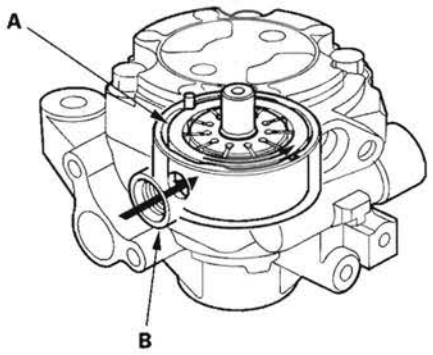

37. Install the pump preload spring (A) in the pump housing.

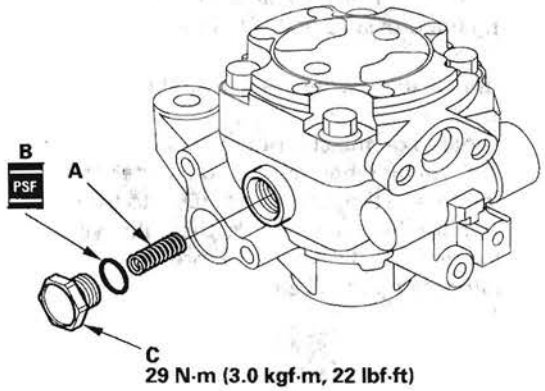

38. Coat the new 12.7 mm O-ring (B) with power steering fluid, and install it on the pump housing cap (C).

39. Install the pump housing cap on the pump housing, and tighten it to the specified torque.

40. Install the pressure control valve spring (A) in the pump housing.

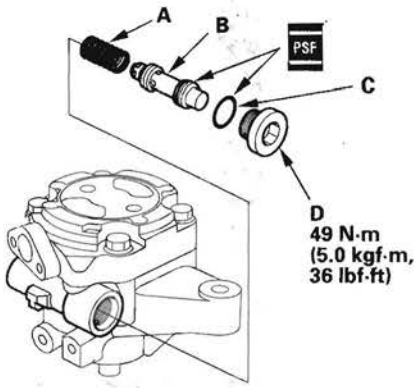

41. Coat the pressure control valve (B) with power steering fluid, and install it in the pump housing.

42. Coat the new 16.7 mm O-ring (C) with power steering fluid, and install it on the pressure control valve cap (D).

43. Install the pressure control valve cap on the pump housing, and tighten it to the specified torque.

44. Coat the new O-ring (A) with power steering fluid, and install it on the inlet joint (B).

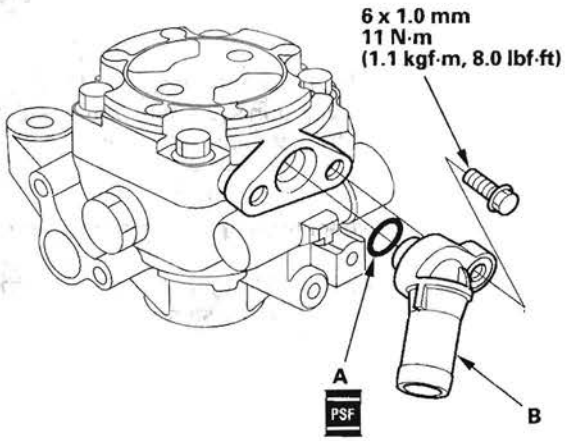

45. Install the inlet joint on the pump housing.

46. Install the pulley (A), then loosely install the pulley nut (B). Hold the steering pump in a vise with soft jaws (C). Be careful not to damage the pump housing with the jaws of the vise.

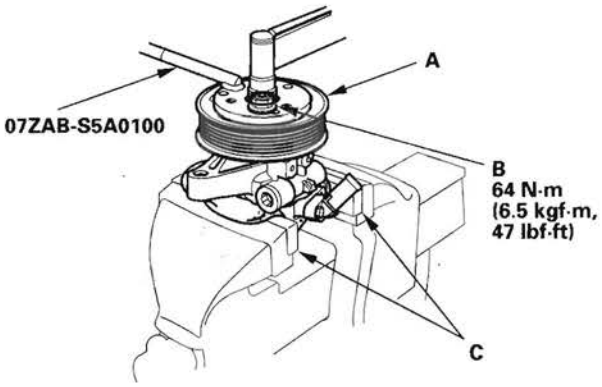

47. Hold the pulley with the pulley holder, and tighten the pulley nut to the specified torque.

48. Check that the pump turns smoothly by turning the pulley. If it turns hard, loosen the four flange bolts on the cover, then retighten them as in step 35, and check the pump again.

Steering Wheel Removal

SRS components are located in this area. Review the SRS component locations (see page 24-13) and the precautions and procedures (see page 24-15) before doing repairs or service.

1. Make sure you have the anti-theft code for the audio and the navigation system (if equipped), then write down the XM audio presets (if equipped).
2. Make sure the ignition switch is OFF, then disconnect the negative cable from the battery.
3. Align the front wheels straight ahead, then remove the driver's airbag from the steering wheel (see page 24-161).
4. Disconnect the cable reel subharness connector (A).

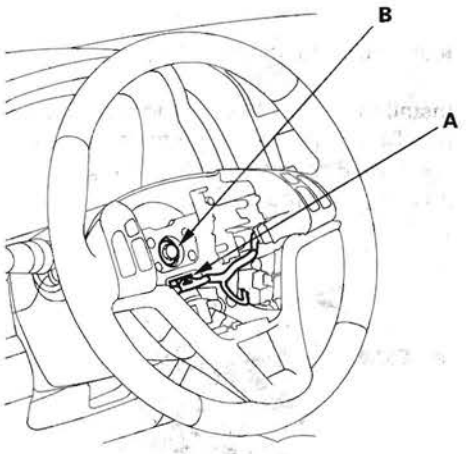

5. Loosen the steering wheel bolt (B).
6. Install a commercially available steering wheel puller (A) on the steering wheel (B). Free the steering wheel from the steering column shaft by turning the pressure bolt (C) of the puller.

   Note these items when removing the steering wheel:
   - Do not tap on the steering wheel or the steering column shaft when removing the steering wheel.
   - If you thread the puller bolts (D) into the wheel hub more than five threads, the bolts will hit the cable reel and damage it. To prevent this, install a pair of jam nuts five threads up on each puller bolt.

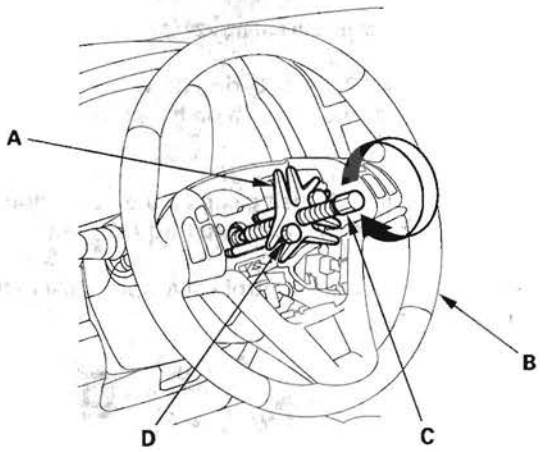

7. Remove the steering wheel puller, then remove the steering wheel bolt and steering wheel from the steering column.

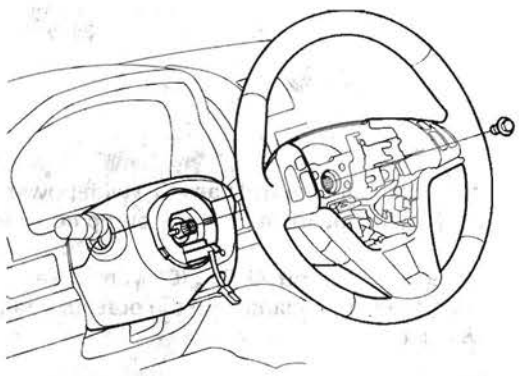

Steering Wheel Disassembly/Reassembly

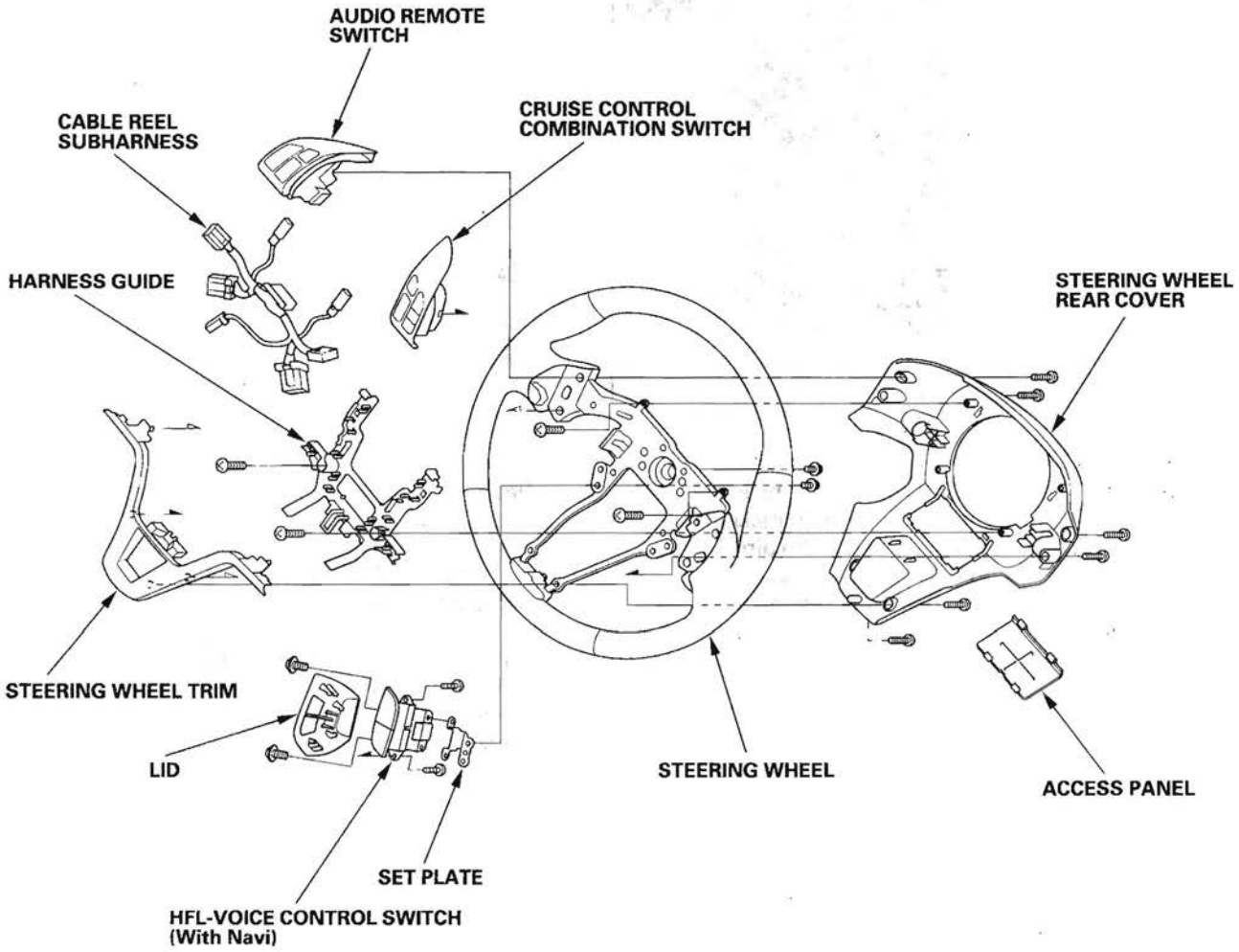

Steering Wheel Installation

1. Before installing the steering wheel, make sure the front wheels are aligned straight ahead, then center the cable reel (A). Do this by first rotating the cable reel clockwise until it stops. Then rotate it counterclockwise about three full turns. The arrow mark (B) on the cable reel label should point straight up.

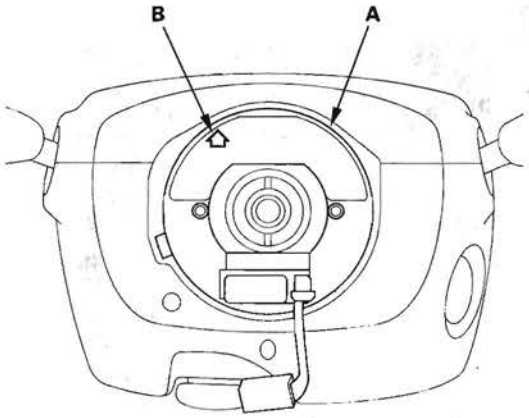

2. Position the two tabs (A) of the turn signal cancelling sleeve (B) as shown. Install the steering wheel on to the steering column shaft, making sure the steering wheel hub (C) engages the pins (D) of the cable reel and the tabs of the turn signal cancelling sleeve. Do not tap on the steering wheel or steering column shaft when installing the steering wheel.

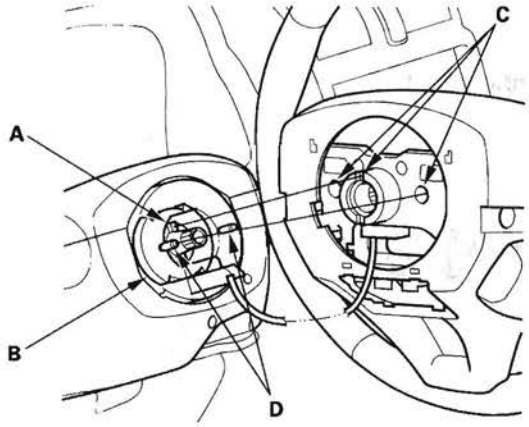

3. Install the steering wheel bolt (A), and tighten it to the specified torque. Connect the cable reel subharness connector (B). Make sure the wire harness is routed and fastened properly.

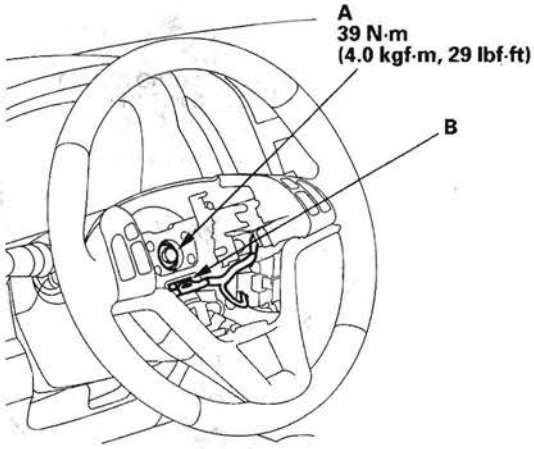

4. Install the driver's airbag, and confirm that the system is operating properly (see page 24-161).

5. Reconnect the negative cable to the battery, and do these tasks:

   - Turn the ignition switch ON (II); the SRS indicator should come on for about 6 seconds and then go off.
   - Enter the anti-theft code for the audio and the navigation system (if equipped), then enter the XM audio presets (if equipped).
   - Make sure the horn and turn signal switches work properly.
   - Make sure the steering wheel switches work properly.
   - Make sure the steering wheel is centered.
   - Set the clock (without Navi).

Steering Column Removal and Installation

SRS components are located in this area. Review the SRS component locations (see page 24-13) and the precautions and procedures (see page 24-15) before doing repairs or service.

Removal

NOTICE

Be careful not to pull the bracket (A) on the front side of steering column out of its normal position.
If the bracket accidentally comes out, replace the steering column as an assembly.

Out of position

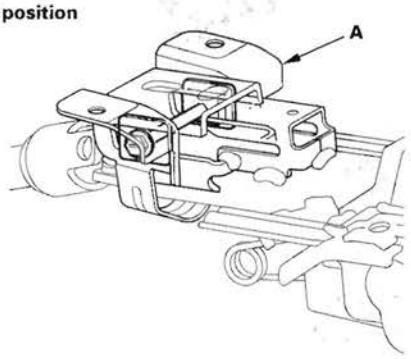

Normal position

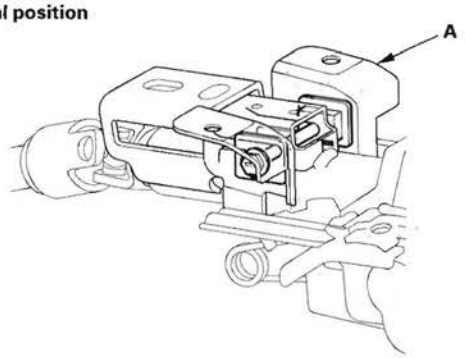

1. Make sure you have the anti-theft code for the audio and the navigation system (if equipped), then write down the XM audio presets (if equipped).
2. Make sure the ignition switch is OFF, then disconnect the negative cable from the battery.
3. Remove the driver's airbag assembly and the steering wheel (see page 17-22).
4. Remove the driver's dashboard undercover (see page 20-100).
5. Remove the column covers (see page 20-107).
6. Remove the steering joint cover (A).

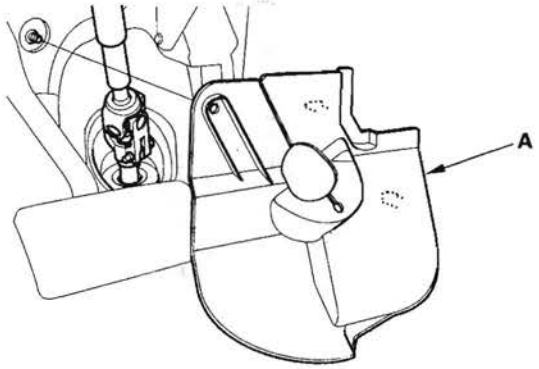

7. Release the lock lever, and adjust the steering column to the full tilt up position, and to the full telescopic in position.
8. Tighten the lock lever.
9. Hold the lower slide shaft (A) on the column with a piece of wire (B) between the joint yoke (C) of the lower slide shaft and joint yoke (D) of the upper shaft to prevent the slider shaft from pulling out.

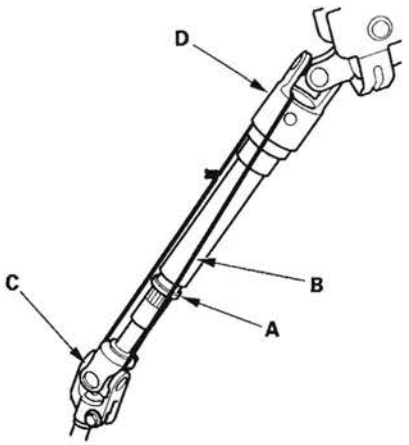

10. Release the lock lever, and adjust the steering column to the full telescopic out position, then tighten the lock lever.

    NOTE: Do not release the lock lever when removing the steering column from the frame.

(cont'd)

Steering Column Removal and Installation (cont'd)

11. Disconnect the wire harness connectors from the combination switch assembly and cable reel (A).

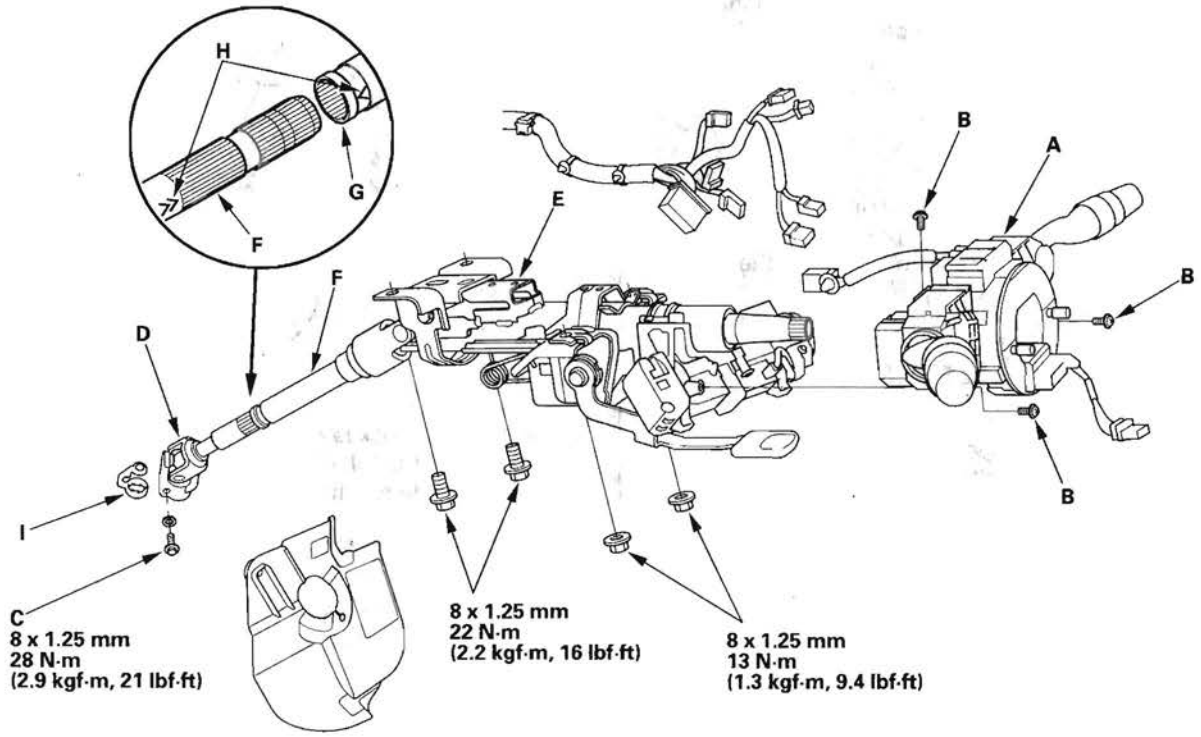

12. Remove the combination switch assembly from the steering column shaft by removing the three screws (B).
13. Disconnect the connectors from the ignition switch, and release the wire harness clips from the steering column.
14. Remove the steering joint bolt (C), then disconnect the steering joint (D) from the pinion shaft.
15. Remove the steering column (E) by removing the attaching nuts and bolts. If the lower slide shaft (F) is removed, slip it into the upper shaft (G) by aligning the paint or stamped marks (H).
16. Remove the center guide (I) (if equipped), and discard it. The center guide is for factory assembly only.

Installation

1. Install the steering column in the reverse order of removal, and note these items:

   - Make sure the wires are not caught or pinched by any parts.
   - Take care not to let the sliding capsules fall out of position during column installation.

2. Center the steering rack within its stroke in steering joint connection.

3. With the rack in the straight ahead driving position, cut the wire (A) and slip the lower end of the steering joint onto the pinion shaft (B) in the range shown.

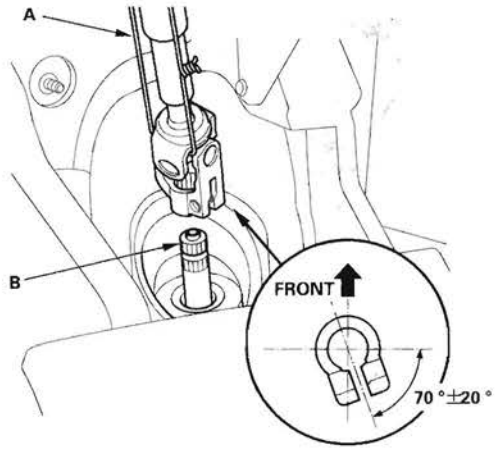

4. Align the bolt hole (A) on the steering joint with the groove (B) around the pinion shaft, and loosely install the joint bolt (C). Be sure that the joint bolt is securely in the groove in the pinion shaft. Pull on the steering joint to make sure that the steering joint is fully seated. Tighten the steering joint bolt to the specified torque.

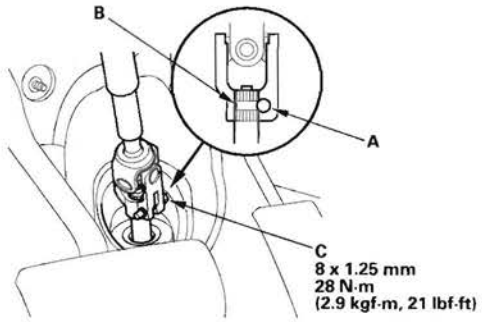

5. Install the steering joint cover (A).

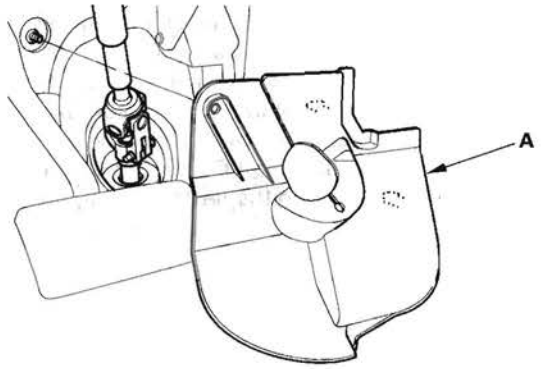

6. Install the steering wheel (see page 17-24).

7. Install the column covers (see page 20-107).

8. Install the driver's dashboard undercover (see page 20-100).

9. Reconnect the negative cable to the battery, and do these tasks:

   - Turn the ignition switch ON (II); the SRS indicator should come on for about 6 seconds and then go off.
   - Enter the anti-theft code for the audio and the navigation system (if equipped), then enter the XM audio presets (if equipped).
   - Make sure the horn and turn signal switches work properly.
   - Make sure the steering wheel switches work properly.
   - Make sure the steering wheel is centered.
   - Set the clock (without Navi).

Steering Column/Tilt/Telescopic/Lock Lever Inspection

Steering Column Inspection

- Check the steering column ball bearing (A) and the steering joint bearings (B) for play and proper movement. If any bearing is noisy or has excessive play, replace the steering column as an assembly.
- Check the absorbing plates (C) and sliding capsules (D) for distortion or breakage. If there is distortion or breakage, replace the steering column as an assembly.
- Check the tilt mechanism and telescopic mechanism for movement and damage.
- Check the lower slide shaft (E) for smooth movement in and out. If the lower slide shaft is removed, slip it into the upper shaft by aligning the paint or stamped marks (F). If it sticks or binds, replace the steering column as an assembly.

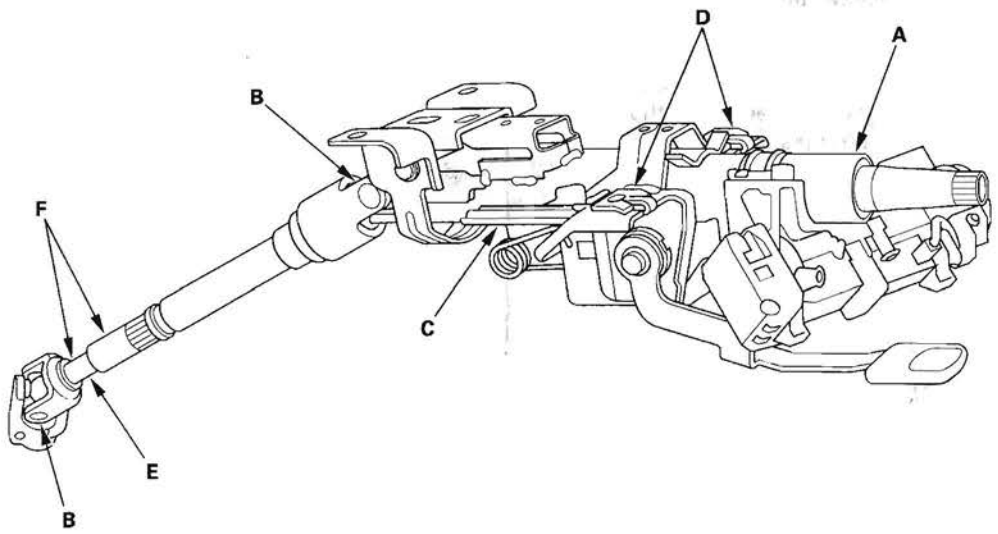

Check of Tilting Load

1. Set the steering wheel in the straight driving position, and loosen the lock lever fully.
2. Attach the spring scale to the highest point of the steering wheel, and set the tilting position at the lowest.
3. Pull the spring scale straight up, and read the operation load during tilting.
4. Attach the spring scale to the lowest point of the steering wheel.
5. Pull the spring scale straight down, and read the operation load during tilting.

   Tilting load (upward/downward):
   Standard: 69 N (7.0 kgf, 15 lbf) max.

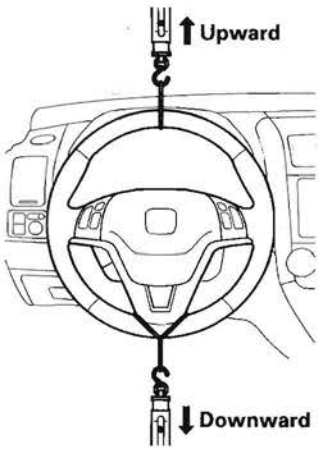

6. If the measurement is larger than the specification, replace the steering column as an assembly (see page 17-25).

Check of Telescopic Load

1. Set the steering wheel in the straight ahead driving position, and loosen the lock lever fully.
2. Attach the spring scale to the center point of the steering wheel.
3. Pull the spring scale, and read the operation load during telescopic.

   Telescopic load:
   Standard: 100 N (10.2 kgf, 22.5 lbf) max.

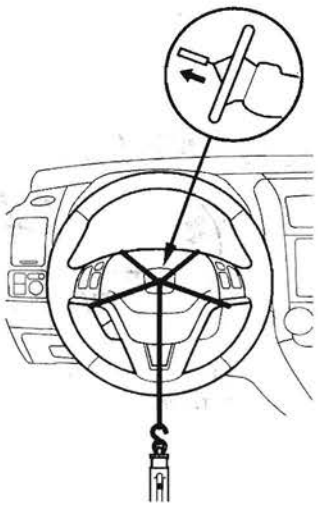

4. If the measurement is larger than the specification, replace the steering column as an assembly (see page 17-25).

(cont'd)

Steering Column/Tilt/Telescopic/ Lock Lever Inspection (cont'd)

Check of Lock Lever Load

1. Move the lock lever (A) from the loosened position to the locked position three to five times, then release the lock lever. Adjust the steering column to the center tilt position and also to the full telescopic out position, and hold the steering wheel.

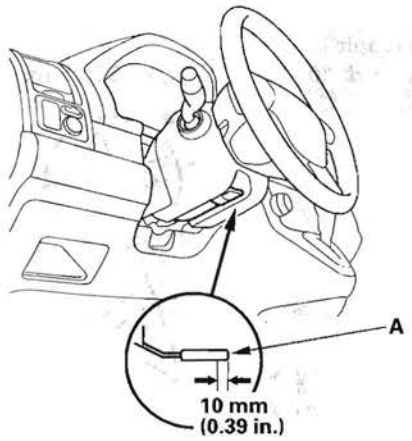

2. Using a push gauge, push up the lock lever at 10 mm (3/8 in.) from its end, and measure the lock lever load.

   Lock lever load:
   50—70 N (5.1—7.1 kgf, 11—16 lbf) min.

3. If the measurement is larger than the specification, replace the steering column as an assembly (see page 17-25).

Steering Lock Replacement

1. Remove the steering column (see page 17-25).

2. Center-punch each of the two shear bolts, and drill the heads of the bolts off with a 5 mm (3/16 in.) drill bit. Be careful not to damage the switch body when removing the shear bolts.

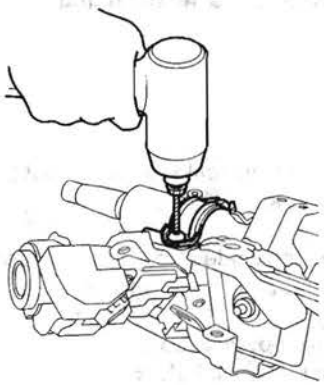

3. Remove the shear bolts from the switch body.

4. Install the switch body without the key inserted.

5. Loosely tighten the new shear bolts.

6. Insert the ignition key, and check for proper operation of the steering wheel lock and that the ignition key turns freely.

7. Tighten the shear bolts (A) until the hex heads (B) twist off.

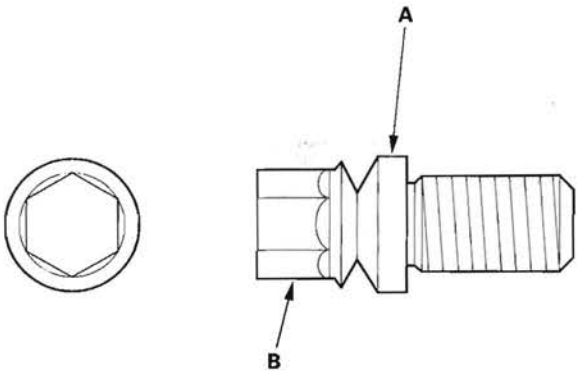

8. Rewrite the new immobilizer control unit-receiver (see page 22-302), and make sure the immobilizer system works properly.

Rack Guide Adjustment

Special Tools Required
Locknut wrench, 40 mm 07MAA-SL00100

1. Set the wheels in the straight ahead position.
2. Loosen the rack guide screw locknut (A) with the locknut wrench, then remove the rack guide screw (B).

   NOTE: The illustration shows 2WD.

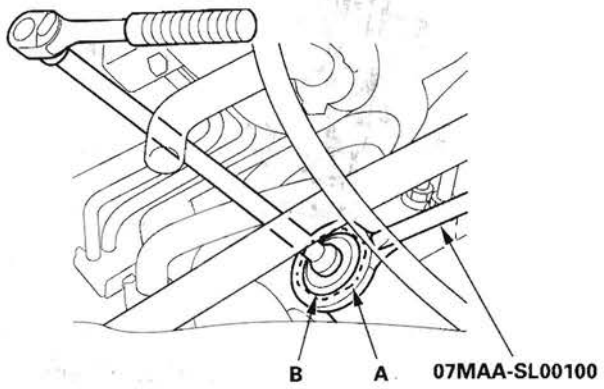

3. Remove the old sealant from the rack guide screw (A), and apply new sealant (Three Bond 1215 or Loctite 5699) to the middle of the threads (B). Loosely install the rack guide screw on the steering gearbox.

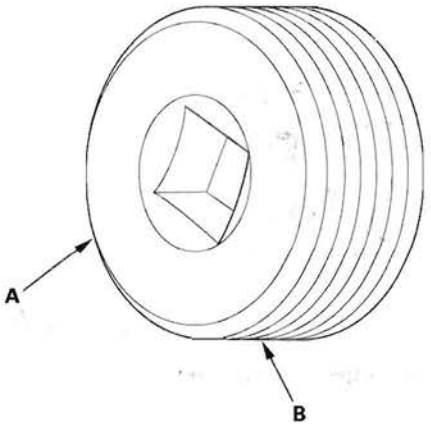

4. Tighten the rack guide screw (A) to 25 N·m (2.5 kgf·m, 18 lbf·ft), then loosen it.

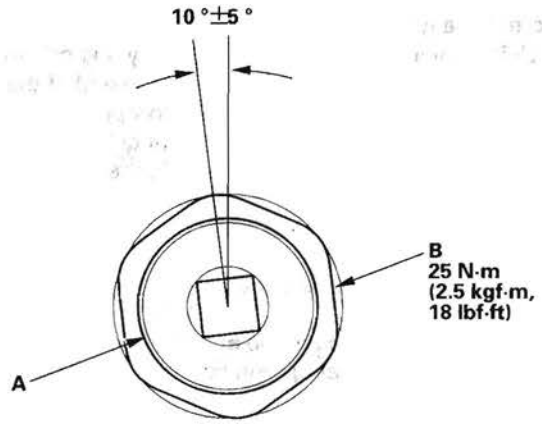

5. Retighten the rack guide screw to 7.8 N·m (0.8 kgf·m, 6 lbf·ft), then back it off to the specified angle.

   Specified return angle: 10 °±5 °

6. Hold the rack guide screw stationary with a wrench, and tighten the locknut (B) by hand until it's fully seated.
7. Install the locknut wrench on the locknut, and hold the rack guide screw stationary with a wrench. Tighten the locknut an additional 30 °with the locknut wrench.
8. Check for unusual steering effort through the complete turning range.
9. Check the steering wheel rotational play (see page 17-7) and the power assist (see page 17-7).

Steering Gearbox Removal

Special Tools Required
Ball joint remover, 28 mm 07MAC-SL0A202

Note these items during removal:
- Using solvent and a brush, wash any oil and dirt off the valve body unit, it's lines, and the end of the steering gearbox. Blow dry with compressed air.
- Be sure to remove the steering wheel before disconnecting the steering joint. Damage to the cable reel can occur.
- The illustrations show 2WD.

1. Drain the power steering fluid (see page 17-12).
2. Make sure you have the anti-theft code for the audio and the navigation system (if equipped), then write down the XM audio presets (if equipped).
3. Make sure the ignition switch is OFF, then disconnect the negative cable from the battery.
4. Raise the front of vehicle, and support it with safety stands in the proper locations (see page 1-7).
5. Remove the front wheels.
6. Remove the steering wheel (see page 17-22).
7. Remove the driver's dashboard undercover (see page 20-100).
8. Remove the steering joint cover (A).

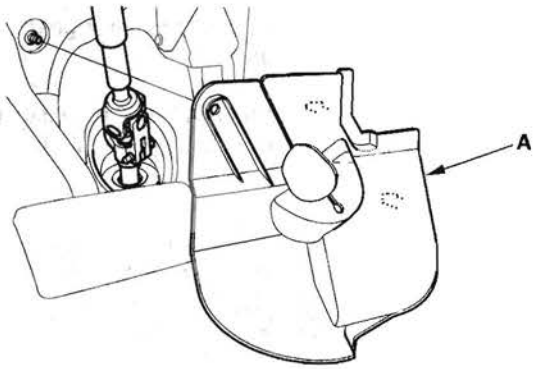

9. Remove the steering joint bolt (A), and disconnect the steering joint by moving the steering joint (B) toward the column. Hold the lower slide shaft (C) on the column with a piece of wire (D) between the joint yoke (E) on the lower slide shaft to the joint yoke on the upper shaft (see page 17-25).

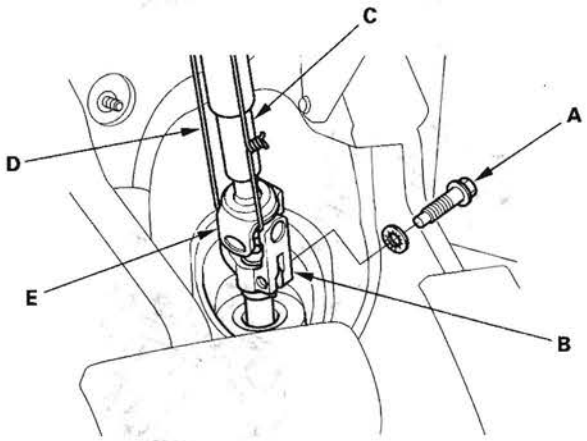

10. Remove the center guide (A) (if equipped), and discard it. The center guide is for factory assembly only.

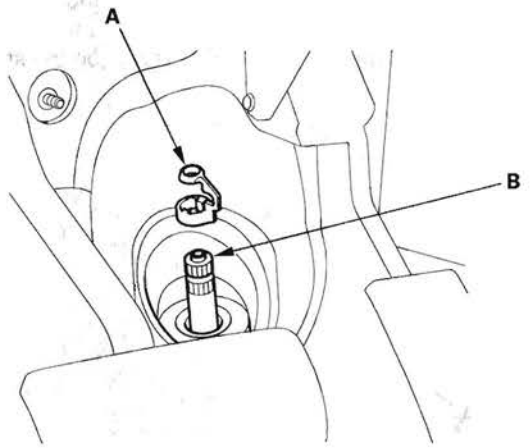

11. Apply vinyl tape to the splines on the pinion shaft (B).

12. Remove the cotter pin (A) from the 12 mm nut (B), and loosen the nut.

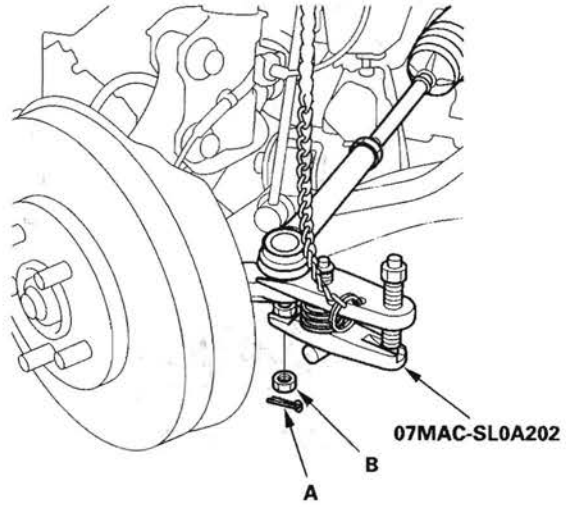

13. Separate the tie-rod ball joint and knuckle using the ball joint remover (see page 18-11).

14. Remove the air cleaner housing (see page 11-340).

15. Remove the P/S heat shield (A).

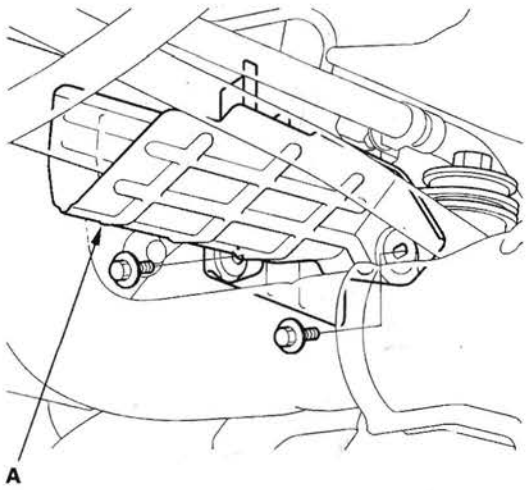

16. Loosen the adjustable hose clamp (A), and disconnect the return hose (B).

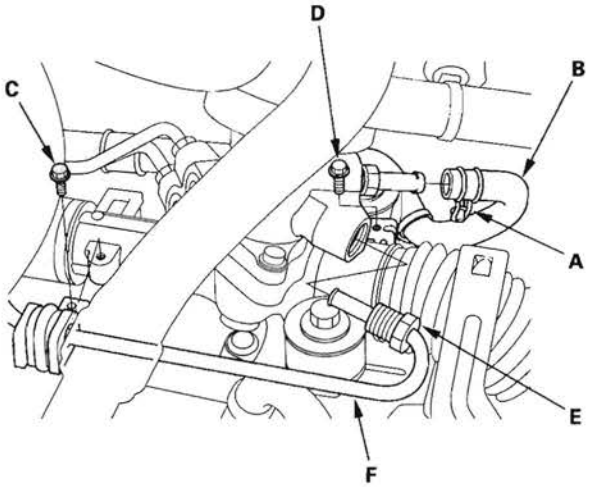

17. Remove the inlet line clamp bolt (C) and return hose clamp bolt (D).

18. Loosen the 18 mm flare nut (E), and disconnect the inlet line (F).

19. Remove the return hose clamp bolt (A), and open the return hose clamp (B).

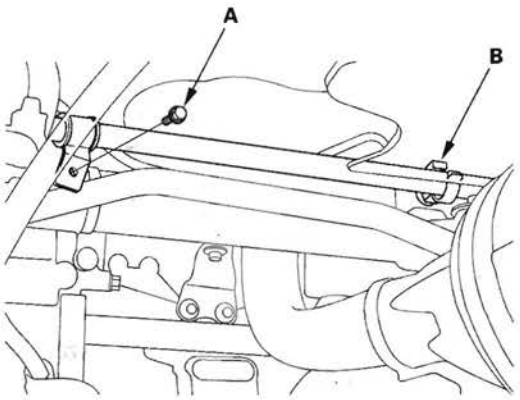

(cont'd)

Steering Gearbox Removal (cont'd)

20. Remove the pump outlet hose clamp bolt (A), then open the return line clamps (B).

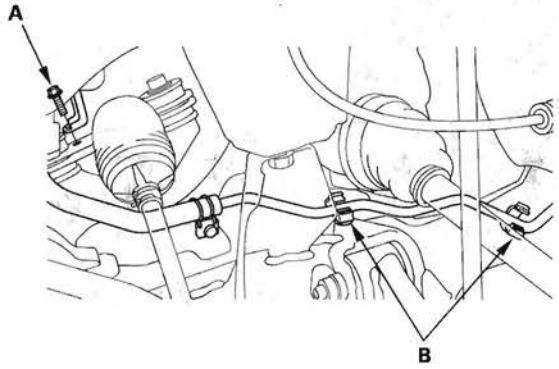

21. Remove the 10 mm flange bolts (A) and washers (B) from the driver's side of the steering gearbox.

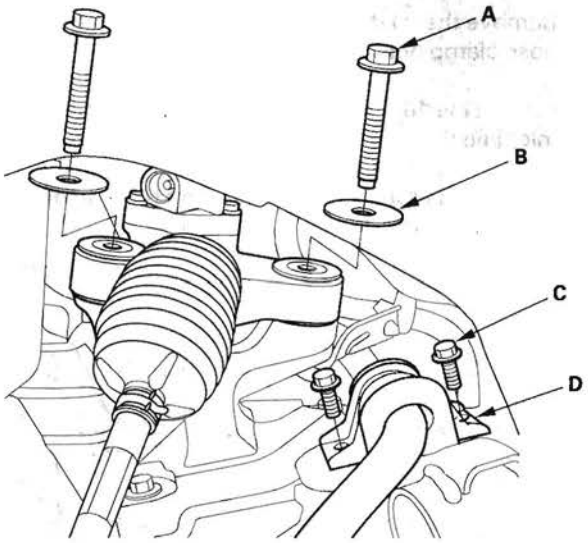

22. Remove the 8 mm flange bolts (C), then remove the stabilizer bar bushing holder (D).

23. Remove the 10 mm flange bolts (A) and washers (B) from the passenger's side of the steering gearbox.

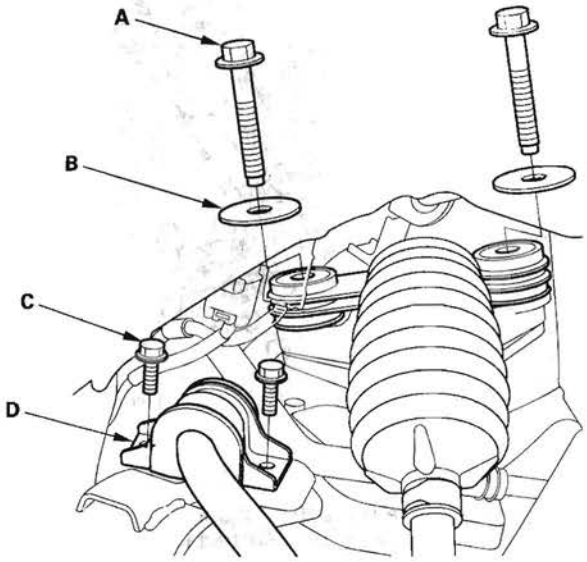

24. Remove the 8 mm flange bolts (C), then remove the stabilizer bar bushing holder (D).

25. Remove the 10 mm flange bolts (A) from both of the gearbox brackets (B).

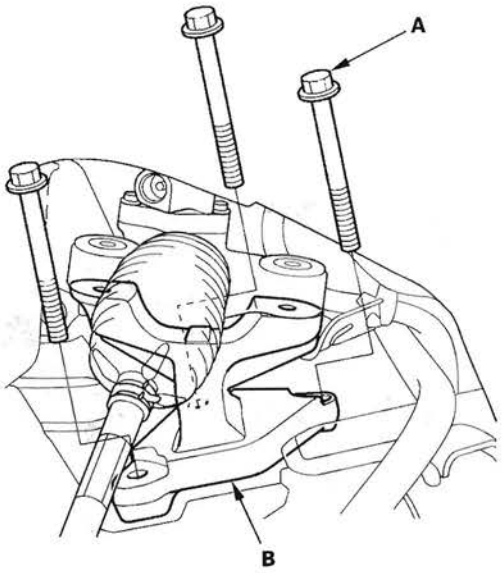

26. Move the steering gearbox toward the front, and remove the pinion shaft grommet (A) from the top of the valve housing.

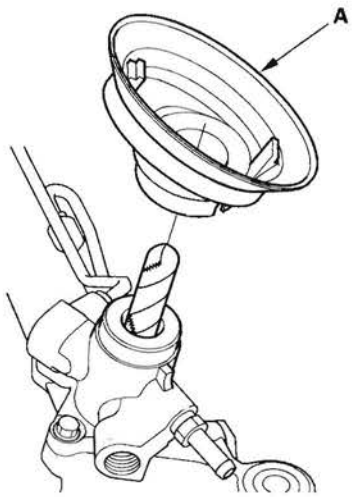

27. Move the steering gearbox to the driver's side, and rotate it so the pinion shaft (A) points toward the rear of the vehicle.

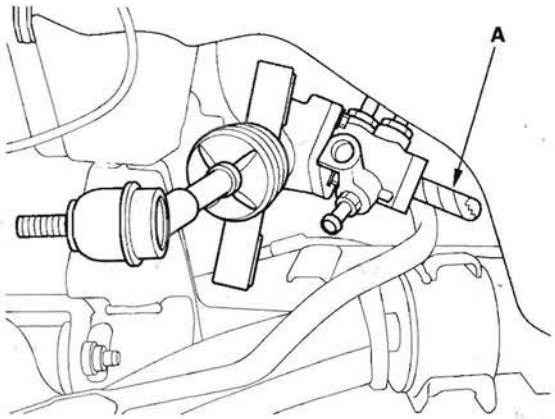

28. Carefully move the steering gearbox (A) as an assembly toward the driver's side of the vehicle until the pinion shaft clears the wheelwell opening.

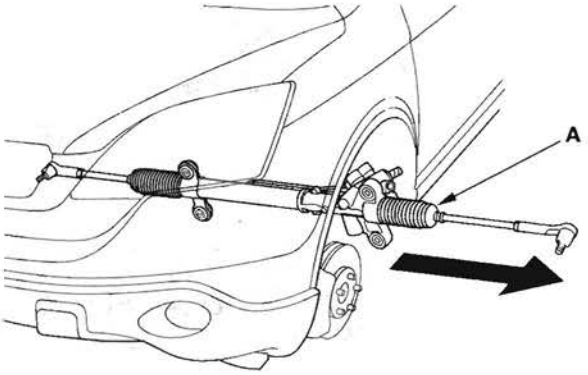

29. Remove the steering gearbox through the wheelwell opening on the driver's side.

30. After removing the steering gearbox, make sure that no power steering fluid gets on the gearbox mount cushions, gearbox housing, and the surface of the front subframe. Wipe off any spilled fluid at once.

Steering Gearbox Overhaul

Exploded View

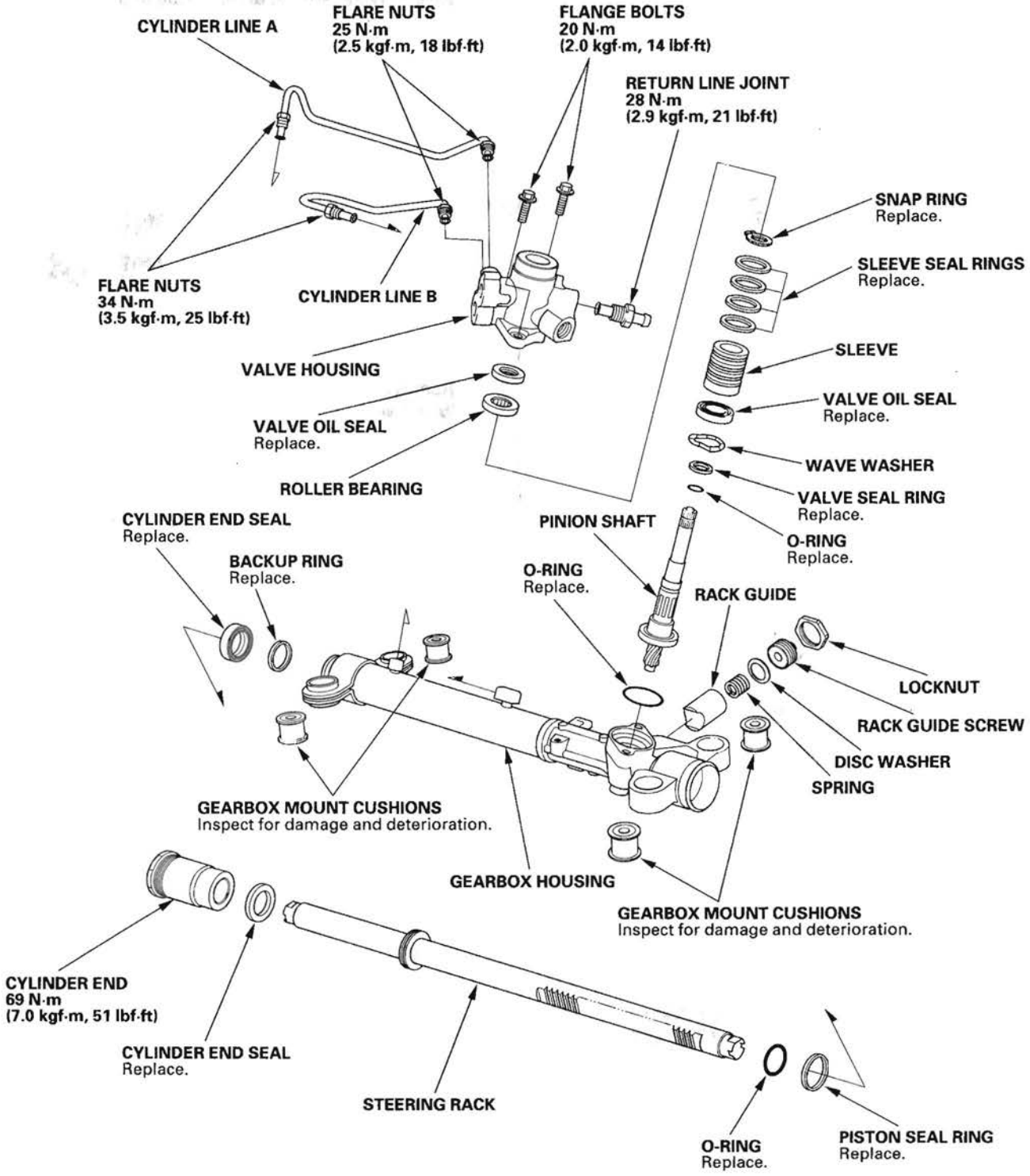

Special Tools Required

- Cylinder end seal remover attachment 070AF-S7S0100
- Valve seal ring sizing tool 07NAG-SR3090A
- Sleeve seal ring guide 07YAG-S2X0100
- Sleeve seal ring sizing tool, 36 mm 07ZAG-S5A0100
- Attachment, 28 x 30 mm 07946-1870100
- Driver 07749-0010000
- Piston seal ring guide 07LAG-SM40100
- Piston seal ring sizing tool 07HAG-SF1020A or 07HAG-SF10200
- Cylinder end seal slider 07LAG-SM40300
- Pincers Oetiker 1098 or equivalent, commercially available

NOTE: Refer to the Exploded View as needed during this procedure.

Removal

1. Remove the steering gearbox (see page 17-32).

Disassembly

2. Remove the boot bands (A) and tie-rod clips (B). Pull the boot away from the ends of the steering gearbox.

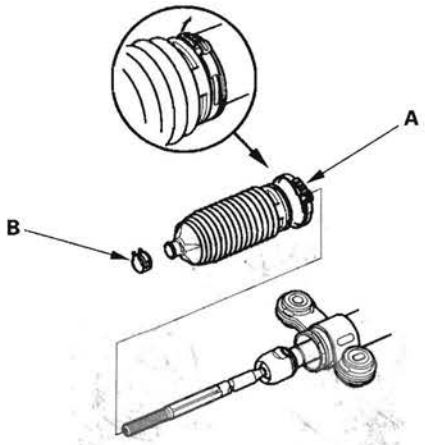

3. Unbend the lock washers (A).

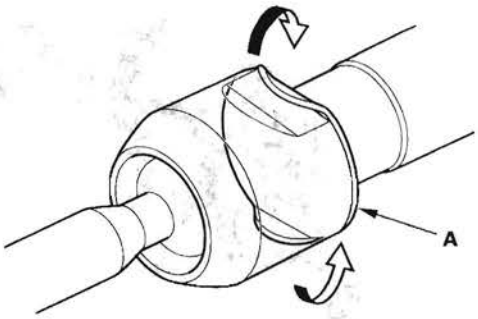

4. Hold the flat surface sections (A) of the steering rack (B) with a wrench, and unscrew both rack ends (C) with another wrench. Be careful not to damage the rack surface with the wrench.

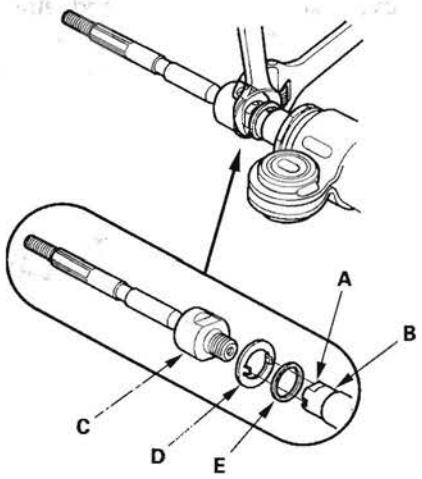

5. Remove the lock washer (D) and rubber stop (E).

(cont'd)

Steering Gearbox Overhaul (cont'd)

6. Loosen the locknut (A), then remove the rack guide screw (B).

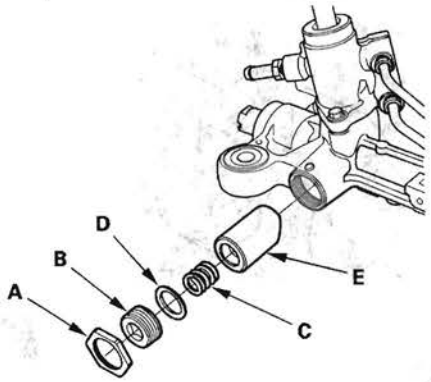

7. Remove the spring (C), disc washer (D), and the rack guide (E) from the gearbox housing.

8. Remove the cylinder lines (A) and return line joint (B) from the steering gearbox.

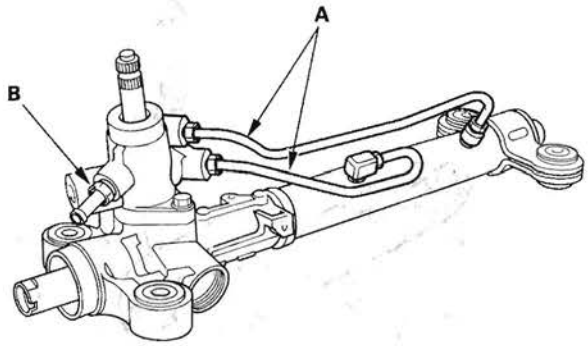

9. Drain the fluid from the cylinder fittings by slowly moving the steering rack back and forth.

10. Remove the two flange bolts, then remove the valve body unit (A) from the steering gearbox (B). Remove the O-ring (C).

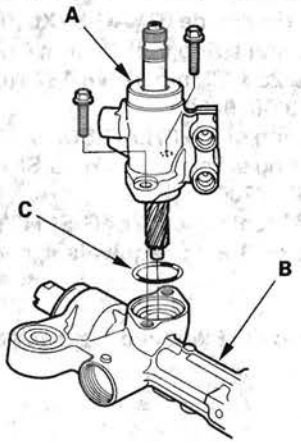

11. Drill a 3 mm (0.12 in.) diameter hole about 2.5—3.0 mm (0.10—0.12 in.) in depth in the staked point (A) on the cylinder. Do not allow metal shavings to enter the cylinder side on the gearbox housing. After removing the cylinder end (B), remove any burrs at the staked point.

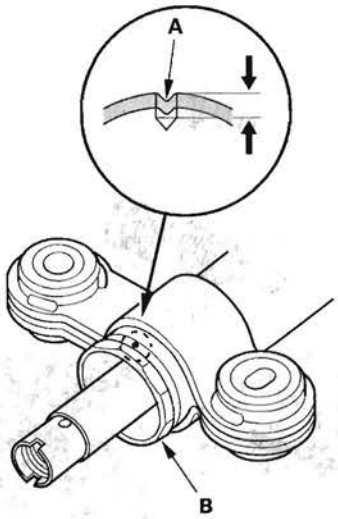

12. Hold the gearbox housing using a C-clamp (commercially available) (A) and the wooden blocks (B) as shown. Do not clamp the cylinder part of the gearbox housing in the vise. Then remove the cylinder end (C).

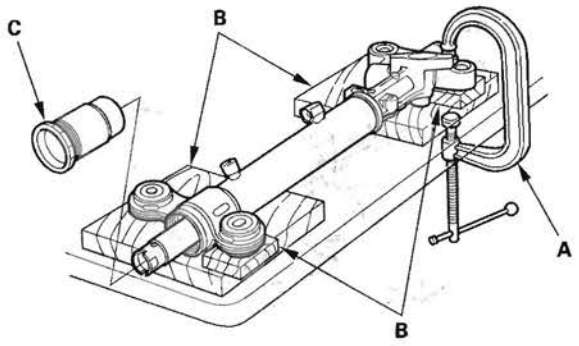

13. Install a commercially available bearing separator (A) on the gearbox housing as shown.

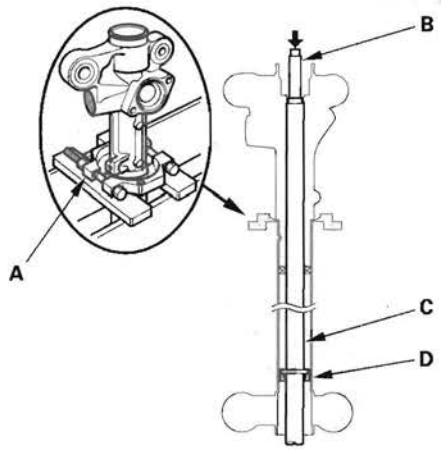

14. Place an appropriate size deep socket wrench (B) on the steering rack (C).

15. Set the steering gearbox in a press so the gearbox housing side points upward, then press the cylinder end seal (D) and steering rack out of the steering gearbox. Hold the steering rack to keep it from falling when pressed clear. Be careful not to damage the inner surface of the cylinder side on the gearbox housing with the tool.

16. Carefully pry the piston seal ring (A) and O-ring (B) off the rack piston. Be careful not to damage the inside of the seal ring groove and piston edges when removing the seal ring.

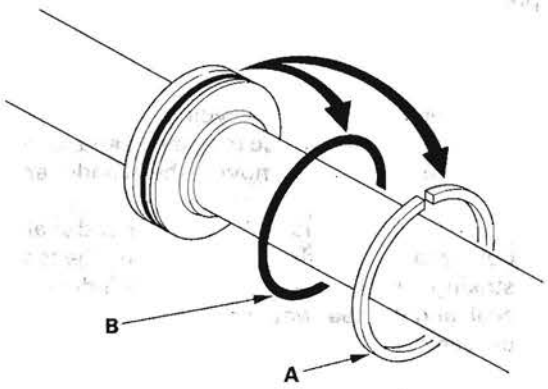

17. Turn the cylinder end seal remover attachment so it will fit through the rack guide hole of the steering gearbox, then position the seal remover on the cylinder end seal (A). Make sure that the seal remover is securely positioned on the seal edges.

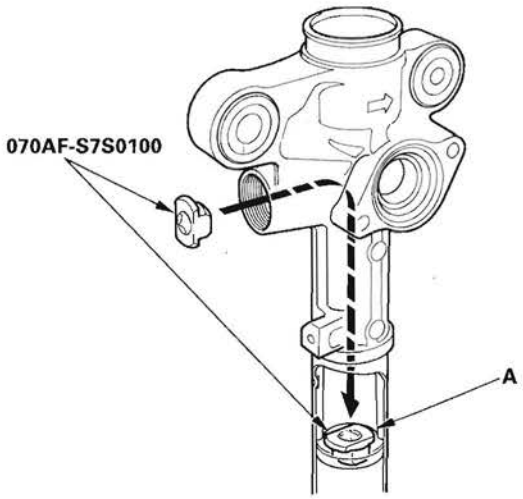

(cont'd)

Steering Gearbox Overhaul (cont'd)

18. Insert a 24 " long 3/8 " drive extension (A), on the cylinder end seal remover attachment. Place the steering gearbox in a press, then remove the cylinder end seal (B) from the steering gearbox by pressing on the 24 " long 3/8 " drive extension.

    Note these items when pressing the cylinder end seal:
    - Keep the tool straight to avoid damaging the cylinder wall. Check the tool angle, and correct it if necessary, when removing the cylinder end seal.
    - Use a press to remove the cylinder end seal. Do not try to remove the seal by striking the tool; striking the tool would break the cylinder end seal, and the seal would remain in the steering gearbox.

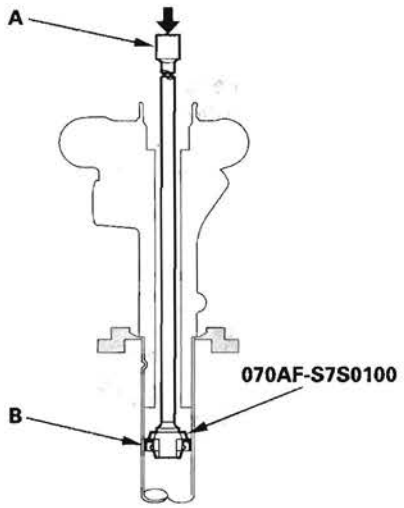

19. Before removing the valve housing (A), apply vinyl tape (B) to the splines on the pinion shaft.

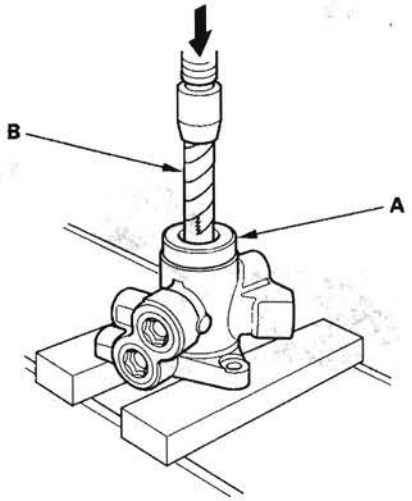

20. Separate the valve housing from the pinion shaft/ valve using a press.

21. With your finger, check the inner wall of the valve housing where the seal ring slides. If there is a step in the wall, the housing is worn. Replace it.

    NOTE: There may be sliding marks from the seal ring on the wall of the valve housing. Replace the valve housing only if the wall is stepped.

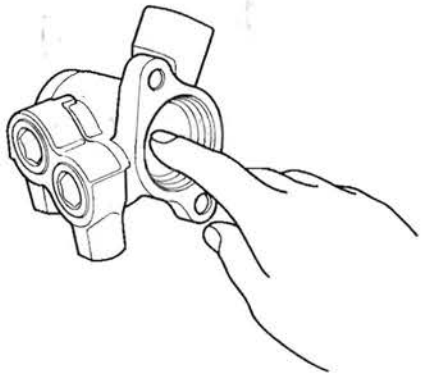

22. Check for wear, burrs, and other damage to the edges of the grooves in the sleeve.

    NOTE: The pinion shaft and sleeve are a precision matched set. If either the pinion shaft or sleeve must be replaced, replace both parts as a set.

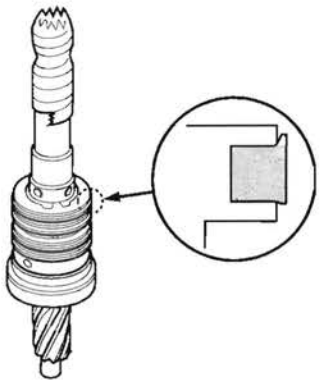

23. Remove the snap ring (A) and sleeve (B) from the pinion shaft.

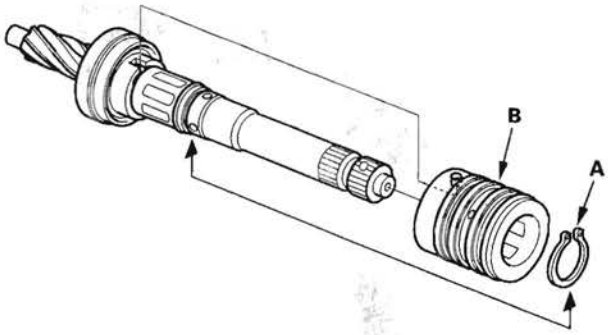

24. Using a cutter or an equivalent tool, cut and remove the four seal rings from the sleeve. Be careful not to damage the edges of the sleeve grooves and outer surface when removing the seal rings.

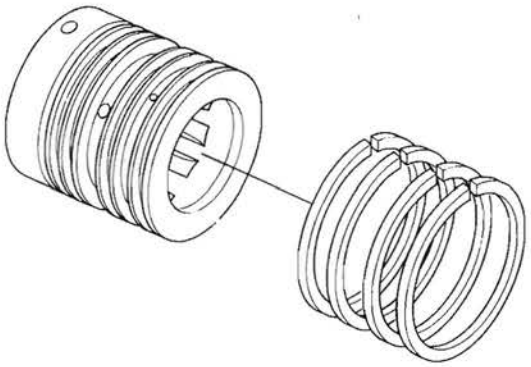

(cont'd)

Steering Gearbox Overhaul (cont'd)

25. Using a cutter or an equivalent tool, cut the valve seal ring (A) and O-ring (B) at the cutting groove position (C) in the pinion shaft. Remove the valve seal ring and O-ring. Be careful not to damage the edges of the pinion shaft groove and outer surface when removing the valve seal ring and O-ring.

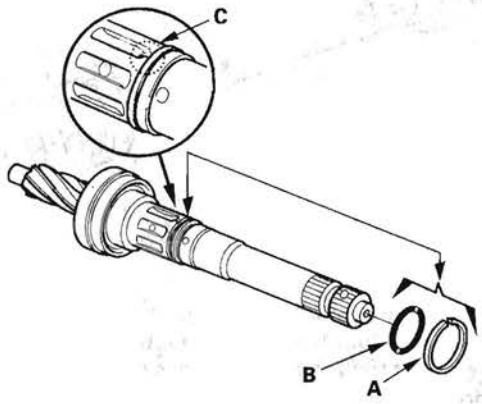

26. Remove the valve oil seal (A) and wave washer (B) from the pinion shaft.

    Note these items during disassembly:
    - Inspect the ball bearing (C) by rotating the outer race slowly. If there is any excessive play or wear, replace the pinion shaft and sleeve as an assembly.
    - The pinion shaft and sleeve are a precise fit; do not intermix old and new pinion shafts and sleeves.

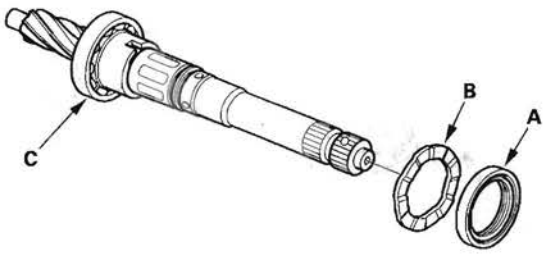

27. Remove the valve oil seal (A) and roller bearing (B) out of the valve housing using a hydraulic press and an appropriate size socket wrench.

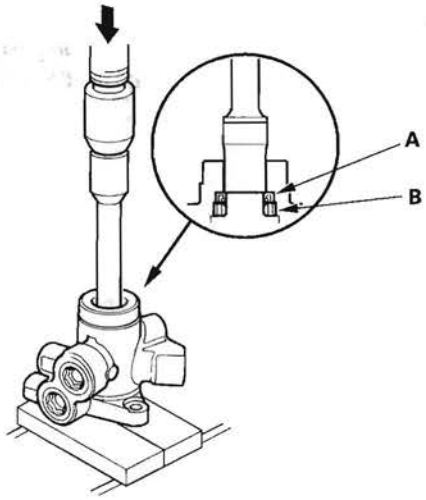

28. Clean the disassembled parts with solvent, and dry them with compressed air. Do not dip rubber parts in the solvent.

Reassembly

29. Apply vinyl tape (A) to the stepped portion of the pinion shaft, and coat the surface of the vinyl tape with power steering fluid.

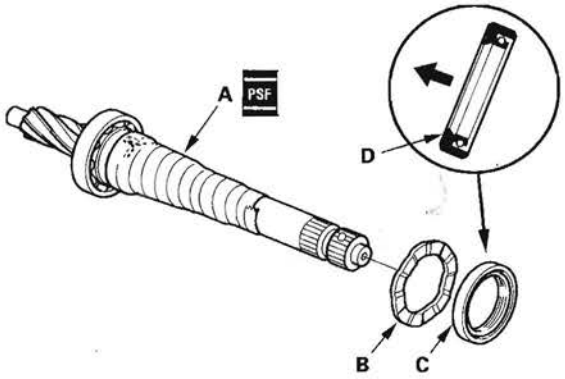

30. Install the wave washer (B).

31. Coat the inside surface of the new valve oil seal (C) with power steering fluid, and install the seal with its grooved side facing opposite the bearing, then slide it over the pinion shaft, being careful not to damage its sealing lip (D).

32. Apply vinyl tape (A) to the splines and stepped portion of the shaft, and coat the surface of the vinyl tape with power steering fluid.

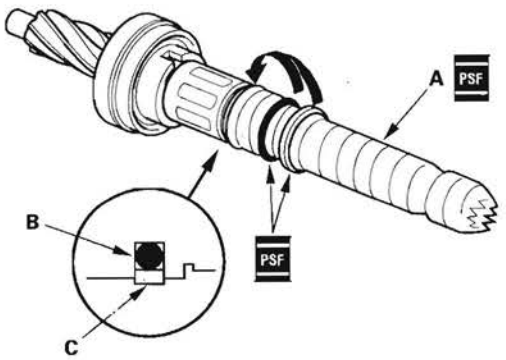

33. Fit the new O-ring (B) in the groove of the pinion shaft. Then slide the new valve seal ring (C) over the shaft and in the groove on the pinion shaft.

34. Remove the tape, and apply power steering fluid to the surface of the valve seal ring (A).

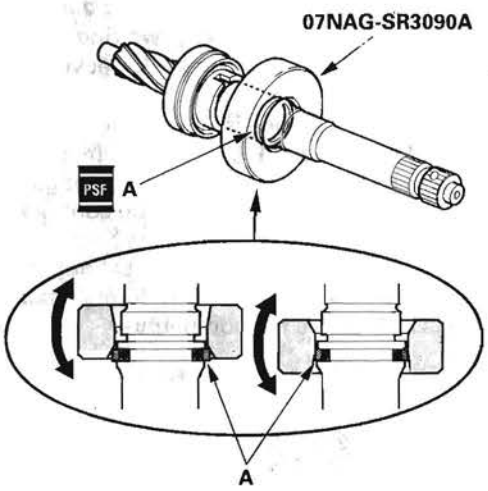

35. Apply power steering fluid to the inside of the valve seal ring sizing tool. Set the larger diameter end of the sizing tool over the valve seal ring, and move the sizing tool up and down several times to make the valve seal ring fit in the pinion shaft groove.

36. Remove the sizing tool, turn it over, slide the smaller diameter end over the valve seal ring. Move it up and down several times to make the valve seal ring fits snugly in the pinion shaft groove.

(cont'd)

Steering Gearbox Overhaul (cont'd)

37. Apply power steering fluid to the surface of the sleeve seal ring guide. Slip two new seal rings (A) over the ring guide from the smaller diameter end, and expand them. Install only two rings at a time from each end of the pinion shaft sleeve (B).

    Note these items when installing the seal ring:
    - Do not over-expand the seal ring. Install the resin seal rings with care so as not to damage them. After installation, make sure you contract the seal rings using the sizing tool.
    - There are two types of sleeve seal rings; black and brown. Do not mix the different types of rings as they are not compatible.

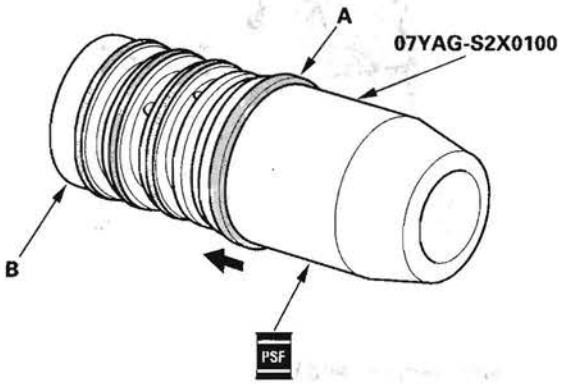

38. Align the ring guide with each groove in the sleeve, and slide a sleeve seal ring into each groove. After installation, compress the seal rings with your fingers temporarily.

39. Apply power steering fluid to the seal rings on the sleeve, and to the entire inside surface of the sleeve seal ring sizing tool, then slowly insert the sleeve into the sizing tool.

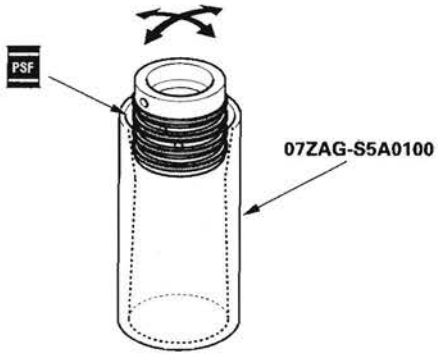

40. Move the sleeve back and forth several times to make the seal rings fit snugly in the sleeve. Make sure the seal rings are not twisted.

41. Apply power steering fluid to the surface of the pinion shaft (A). Slide the sleeve (B) onto the pinion shaft by aligning the locating pin (C) on the inside of the sleeve with the cutout (D) in the shaft. Then install the new snap ring (E) securely in the pinion shaft groove. Be careful not to damage the valve seal ring when inserting the sleeve.

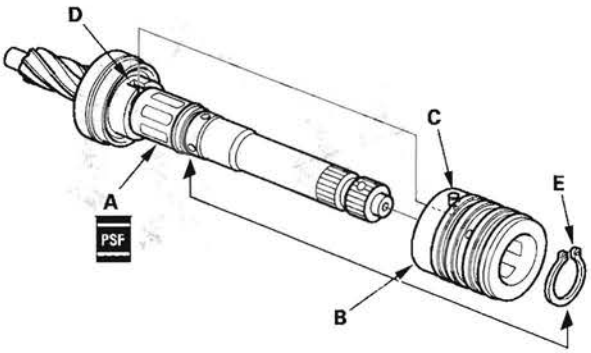

42. Apply power steering fluid to the seal ring lip of the new valve oil seal (A), then install the seal in the valve housing (B) using a hydraulic press and driver. Install the seal with its grooved side facing the tool.

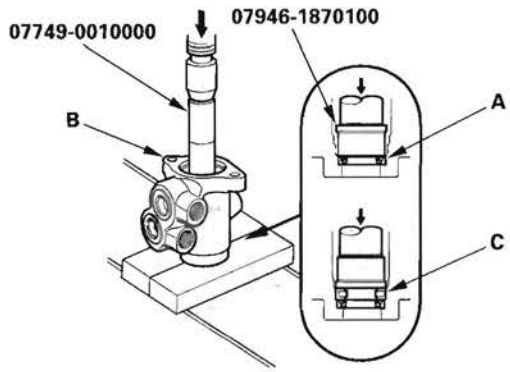

43. Press the roller bearing (C) into the valve housing with a hydraulic press and attachment.

44. Apply vinyl tape (A) to the pinion shaft, then coat the vinyl tape with power steering fluid.

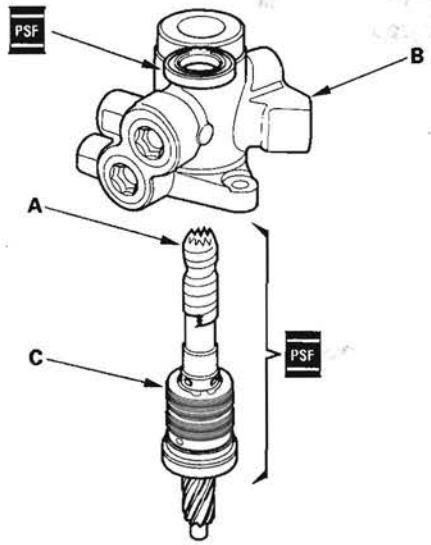

45. Insert the pinion shaft into the valve housing (B). Be careful not to damage the valve seal rings (C).

46. Remove the vinyl tape from the pinion shaft, then remove any residue from the tape adhesive.

47. Press the pinion shaft/sleeve into the valve housing with a hydraulic press. Check that the pinion shaft/sleeve turns smoothly by hand after installing it.

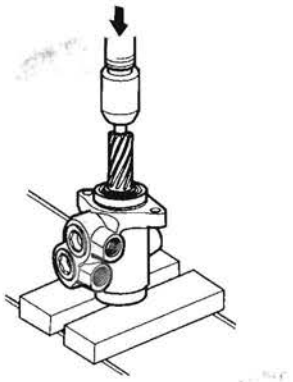

48. Coat the piston seal ring guide with power steering fluid, then slide it onto the rack, big end first.

49. Position the new O-ring (A) and new piston seal ring (B) on the ring guide, then slide them down toward the big end of the tool.

    Note these items during reassembly:
    - Do not over expand the resin seal rings. Install the resin seal rings with care so as not to damage them. After installation, make sure you contract the seal ring using the sizing tool.
    - Replace the piston's O-ring and seal ring as a set.

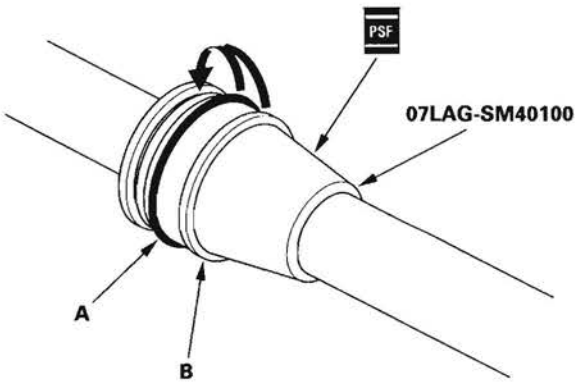

50. Pull the O-ring off into the piston groove, then pull the piston seal ring off into the piston groove on top of the O-ring.

(cont'd)

Steering Gearbox Overhaul (cont'd)

51. Coat the piston seal ring (A) and the inside of the piston seal ring sizing tool with power steering fluid, then carefully slide the tool onto the rack and over the piston seal ring.

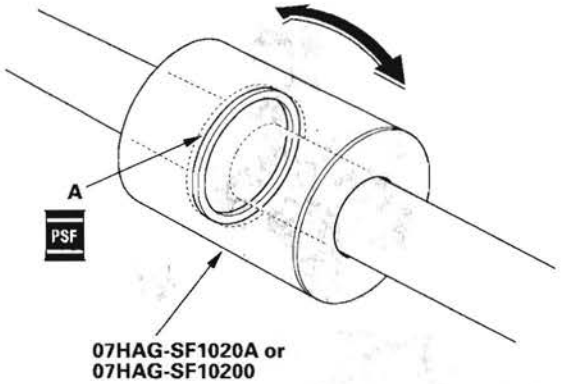

52. Move the sizing tool back and forth several times to make the piston seal ring fit snugly in the piston.

53. Coat the sliding surface of the cylinder end seal slider (A) and new cylinder end seal (B) with power steering fluid. Place the seal on the seal slider with its grooved side (C) facing opposite the seal slider.

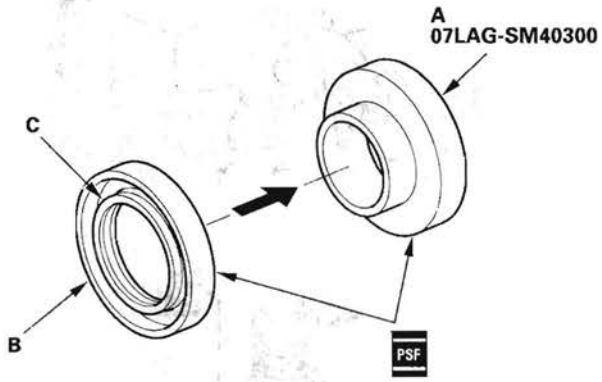

54. Coat the surface of the steering rack (A) with power steering fluid.

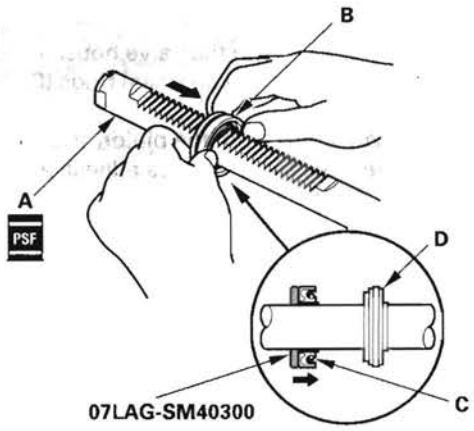

55. Install the cylinder end seal (B) onto the steering rack with its grooved side (C) toward the piston (D).

56. Separate the cylinder end seal from the cylinder end seal slider, then remove the seal slider.

57. Install the new backup ring (A) on the steering rack, then place the backup ring and cylinder end seal (B) against the piston (C).

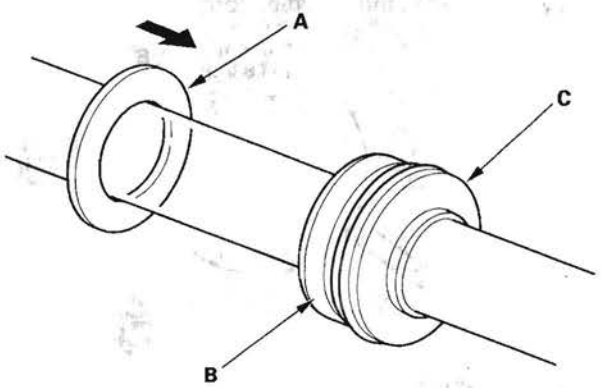

58. Apply steering grease to the steering rack teeth, then insert the steering rack into the gearbox housing. Be careful not to damage the inner surface of the cylinder wall with the rack edges.

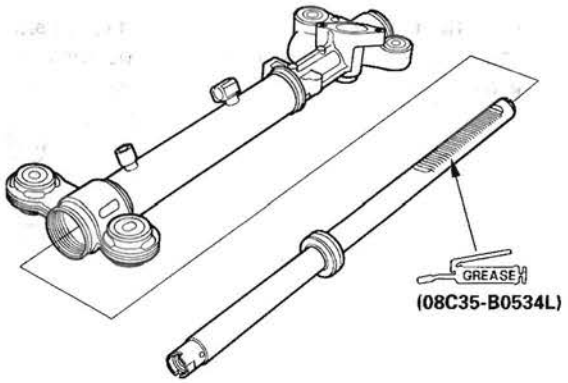

59. Insert an appropriate size socket wrench (A) onto the steering rack as shown.

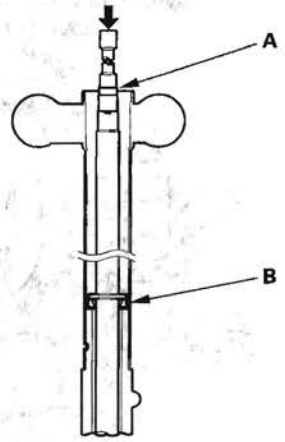

60. Install the cylinder end seal (B) into the bottom of the cylinder by pressing on the tool with a press. Do not push on the tool with excessive force as it may damage the cylinder end seal.

61. Remove the tool, and center the steering rack.

62. Coat the sliding surface of the cylinder end seal slider (A) and new cylinder end seal (B) with power steering fluid. Place the seal on the seal slider with its grooved side (C) facing opposite the seal slider.

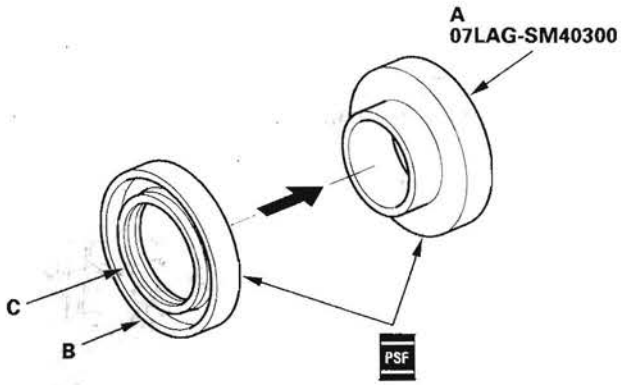

(cont'd)

Steering Gearbox Overhaul (cont'd)

63. Coat the inside surface of the cylinder end seal slider and steering rack with power steering fluid, then install the cylinder end seal (A) onto the steering rack with its grooved side toward the cylinder.

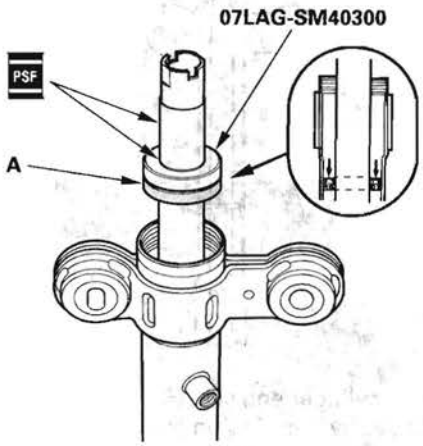

64. Separate the cylinder end seal from the seal slider, then remove the seal slider.

65. Push in the cylinder end seal with your finger. Be careful not to damage the face of the seal with the threads and burrs at the staked position of the cylinder housing.

66. Hold the gearbox housing using a C-clamp (commercially available) (A) and the wooden blocks (B). Do not clamp the cylinder part of the gearbox housing in the vise.

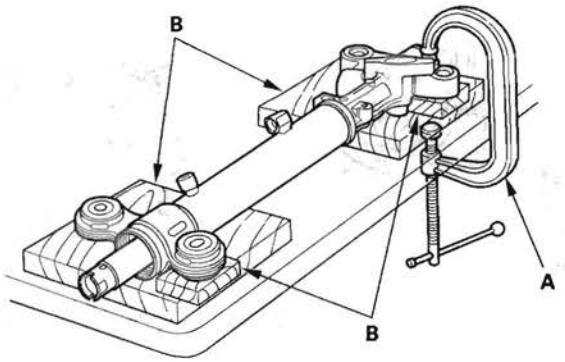

67. Coat the inside surface of the cylinder end (A) with power steering fluid, then install the cylinder end by screwing it into the cylinder (B). Tighten the cylinder end to the specified torque.

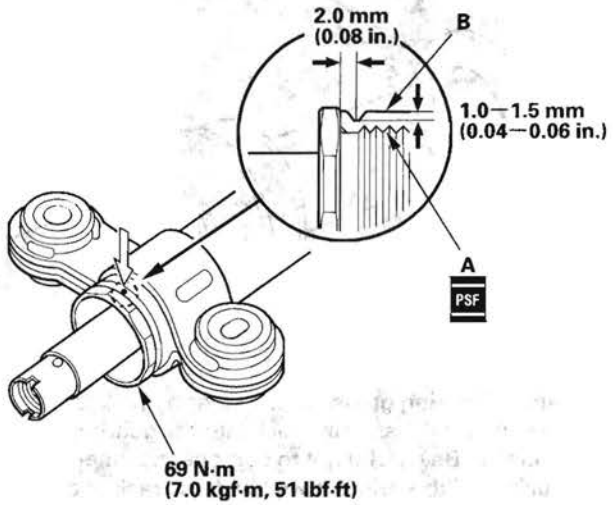

68. Stake the point of the cylinder shown (opposite from where the stake was removed during disassembly).

69. Coat the new O-ring (A) with steering grease, and carefully fit it on the valve housing.

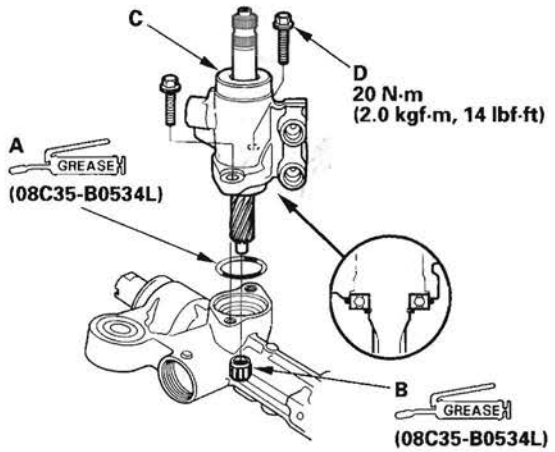

70. Apply steering grease to the needle bearing (B) in the gearbox housing, then install the valve body unit (C) by engaging the gears. Note the valve body unit installation position (direction of the line connections).

71. Tighten the flange bolts (D) to the specified torque.

72. Install the cylinder lines (A) and return line joint (B).

    Note these items during reassembly:
    - Thoroughly clean the joints of the cylinder lines. The joints must be free of foreign material.
    - Install the cylinder lines by tightening the flare nuts by hand first, then tighten the flare nuts to the specified torque.

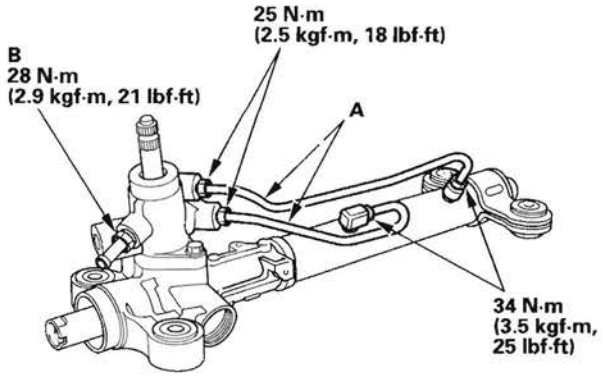

73. Apply steering grease to the sliding surface of the rack guide (A), and install it onto the gearbox housing.

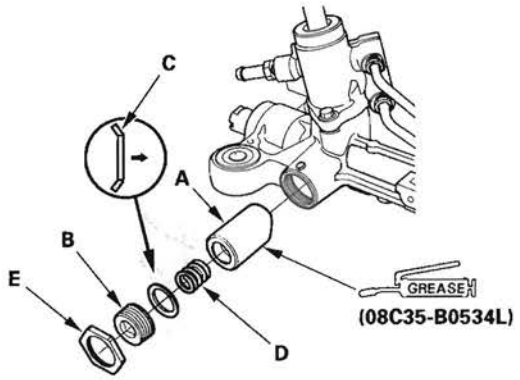

74. Remove the old sealant from the rack guide screw (B), then apply new sealant (Three Bond 1215 or Loctite 5699) to the middle of the threads. Install the disc washer (C) with its convex side facing the rack guide, the spring (D), rack guide screw, and locknut (E).

75. Adjust the rack guide screw (see page 17-31). After adjusting, check that the rack moves smoothly by sliding it right and left.

76. Install a new rubber stop (A) and a new lock washer (B). Align the lock washer tabs (C) with the slots (D) on the rack end (E) while holding the lock washer in place. Repeat this step for the other side of the rack.

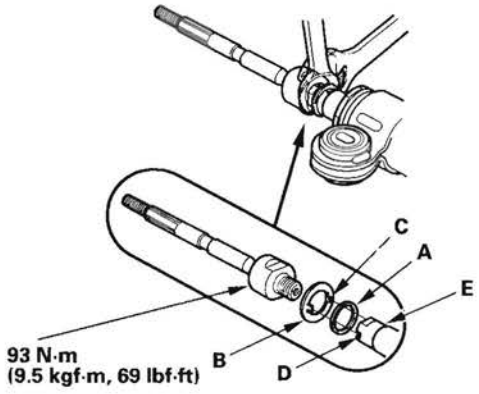

77. Hold the flat surface sections of the steering rack with a wrench, and tighten both rack ends. Be careful not to damages the rack surface with the wrench.

(cont'd)

Steering Gearbox Overhaul (cont'd)

78. Bend the lock washer (A) back against the flat spots on the rack end joint housing.

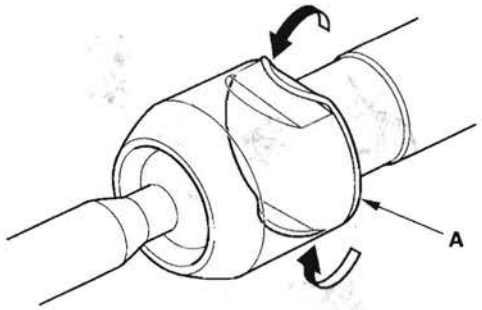

79. Apply multipurpose grease to the circumference of the rack end joint housing (A).

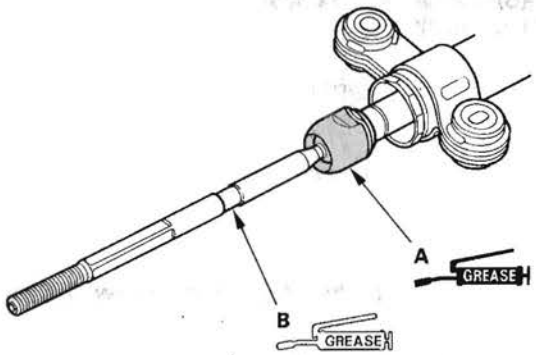

(P/N 08798-9013)

80. Apply a light coat of silicone grease (P/N 08798-9013) to the boot grooves (B) on the rack end.

81. Center the steering rack within its stroke.

82. Clean off any grease or contamination from the boot installation grooves (A) around on the gearbox housing. Install the boots (B) on the rack ends with the tie-rod clips (C), and fit the boot end in the installation grooves in the housing properly.

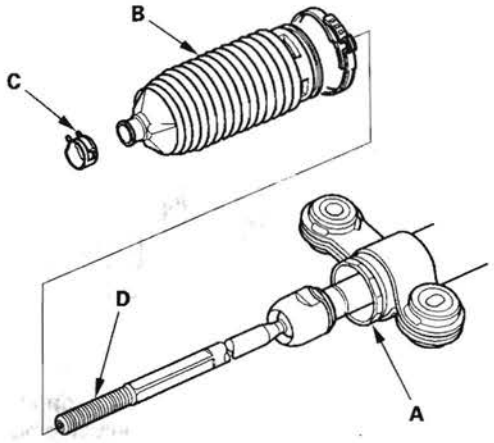

83. After installing the boots, wipe the grease off the threaded section (D) of the rack end.

84. Install the new boot bands by aligning the tabs (A) with the holes (B) on the band.

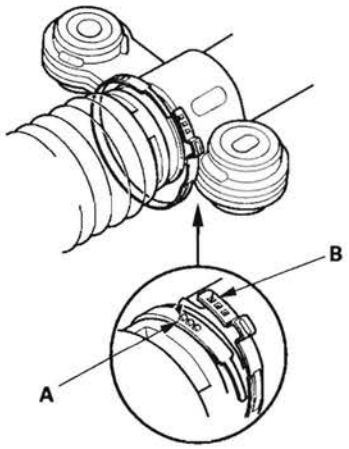

85. Close the ear portion (A) of the band (B) with commercially available pincers, Oetiker 1098 or equivalent (C).

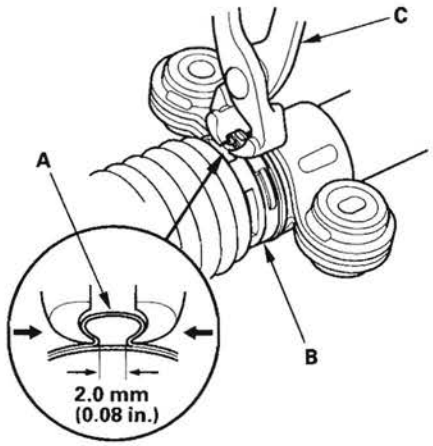

86. Slide the rack right and left to be certain that the boots are not deformed or twisted.

87. Reinstall the steering gearbox (see page 17-52).

Steering Gearbox Installation

NOTE: The illustrations show 2WD.

1. Before installing the steering gearbox, make sure that no power steering fluid is on the mating surface of the steering gearbox and the front subframe. To prevent the gearbox mounting bolts from loosening after the installation, remove any power steering fluid from the mount cushions and bolt holes.
2. Apply vinyl tape to the splines on the pinion shaft (A).

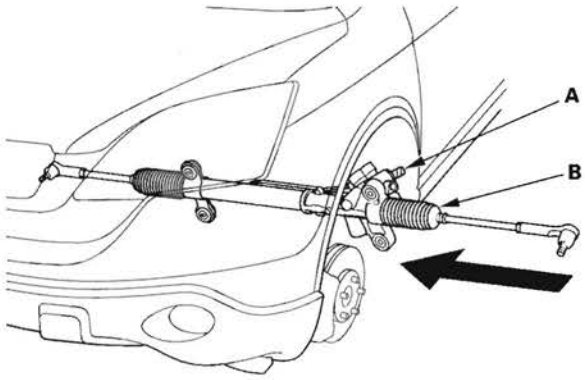

3. Slide the steering gearbox (B) between the front subframe and body from the driver's side.
4. Carefully move the steering gearbox toward the passenger's side until the pinion shaft clears the wheelwell opening on the body.
5. Rotate the steering gearbox so the pinion shaft (A) points upward.

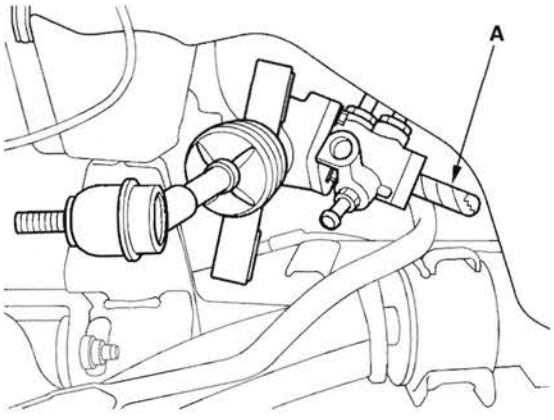

6. Continue moving the steering gearbox toward the passenger's side until the steering gearbox is in position.
7. Install the pinion shaft grommet (A). Align the slot in the pinion shaft grommet with the lug portion (B) on the valve housing. The grommet must not have a gap at the mating surface of the grommet and valve housing.

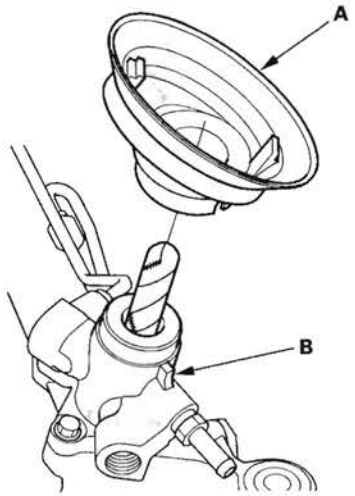

8. Install the gearbox brackets (A), and loosely install the steering gearbox bracket mounting bolts (B).

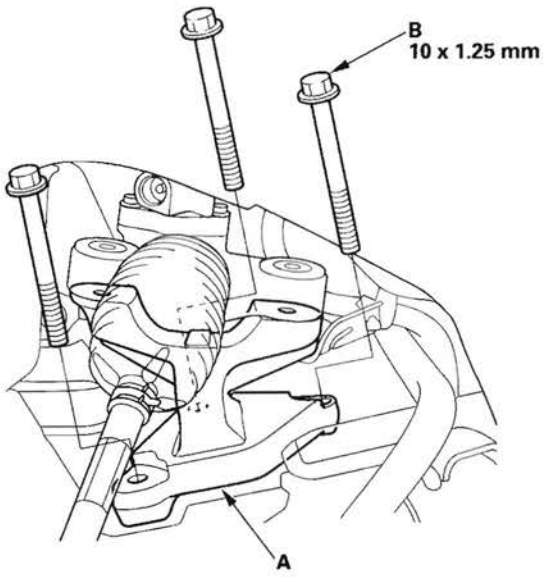

9. Install the gearbox brackets (A) with the 10 mm flange bolts to the specified torque in the sequence shown.

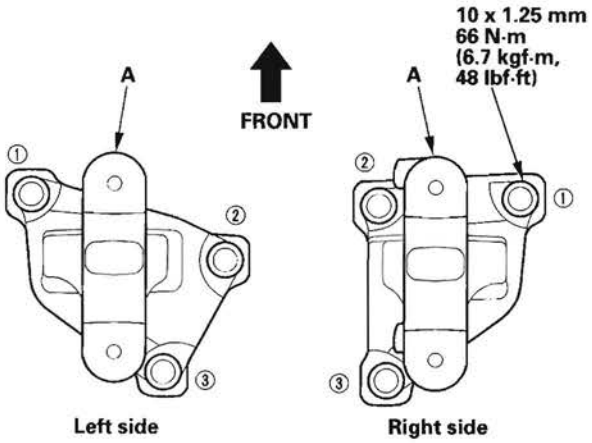

10. Loosely install the 10 mm flange bolts (A) and washers (B) on the driver's side of the steering gearbox.

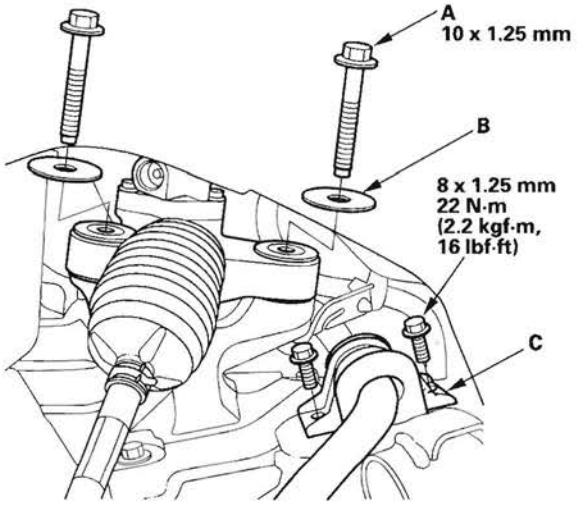

11. Install the stabilizer bar bushing holder (C).

12. Loosely install the 10 mm flange bolts (A) and washers (B) on the passenger's side of the steering gearbox.

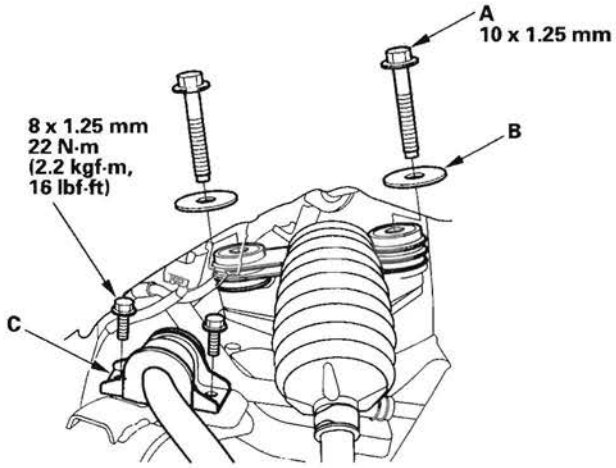

13. Install the stabilizer bar bushing holder(C).

14. Tighten the 10 mm flange bolts to the specified torque in the sequence shown.

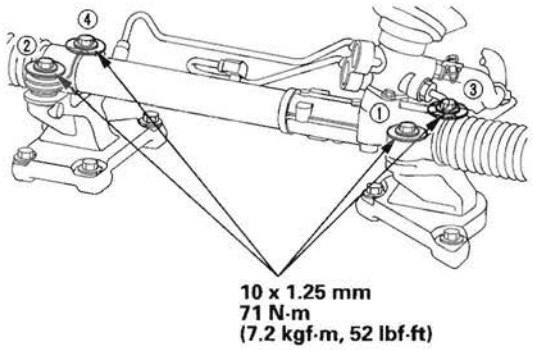

(cont'd)

Steering Gearbox Installation (cont'd)

15. Install the pump outlet hose clamp bolt (A), then clamp the return line with the clamps (B).

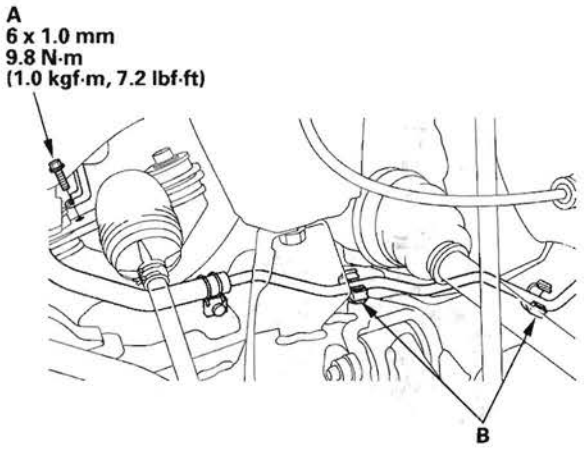

16. Install the return hose clamp bolt (A), then clamp the return hose with the clamp (B).

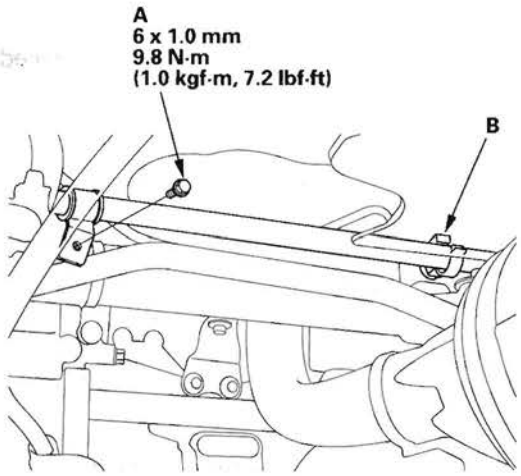

17. Connect the inlet line (A), and tighten the 18 mm flare nut (B) to the specified torque.

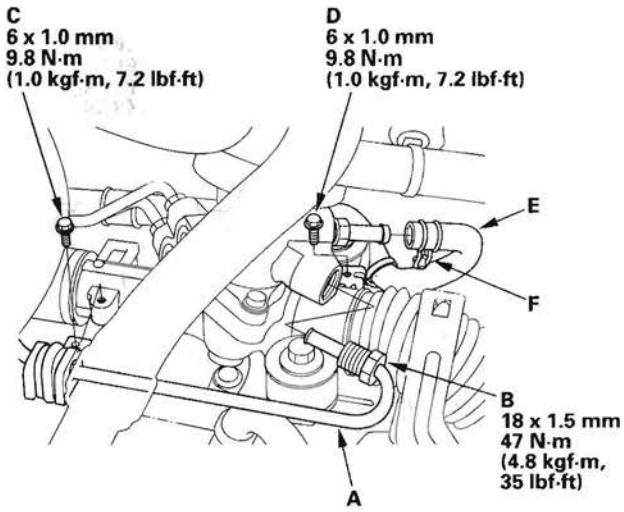

18. Install the inlet line clamp bolt (C) and return hose clamp bolt (D).

19. Connect the return hose (E) securely, and tighten the adjustable hose clamp (F) (see page 17-13).

20. Install the P/S heat shield (A).

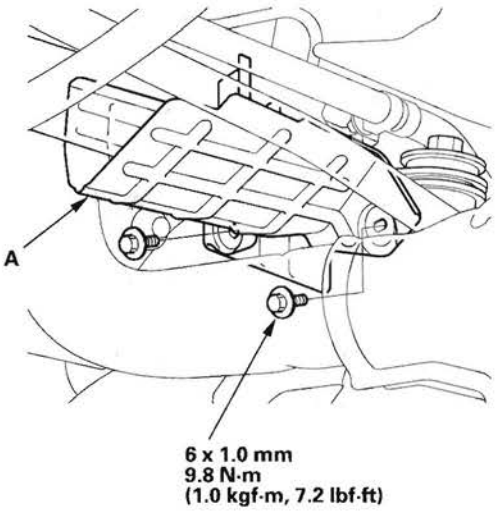

21. Install the air cleaner housing (see page 11-340).

22. Wipe off any grease contamination from the ball joint tapered section and threads. Reconnect the tie-rod ends (A) to the steering knuckles. Install the 12 mm nut (B), and tighten it.

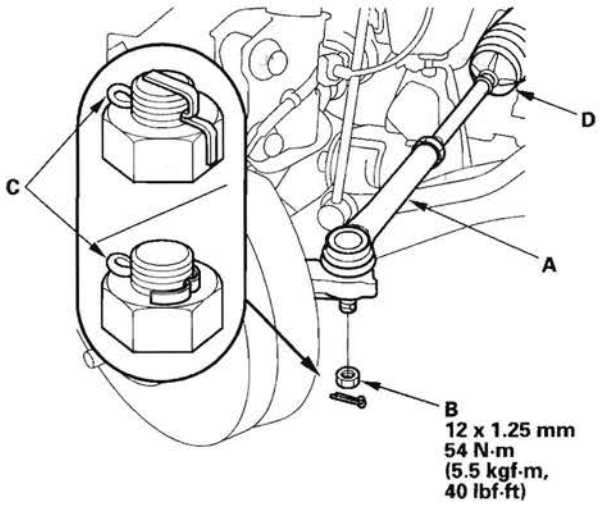

23. Install the new cotter pin (C), and bend it as shown.

    NOTE: Check the boot (D) for damage and deterioration. If there is damage or deterioration, replace the boot (see page 17-36).

24. Center the steering rack within its stroke in steering joint connection, then remove the vinyl tape from the pinion shaft.

25. With the rack in the straight ahead driving position, cut the wire (A) and slip the lower end of the steering joint onto the pinion shaft (B) in the range shown.

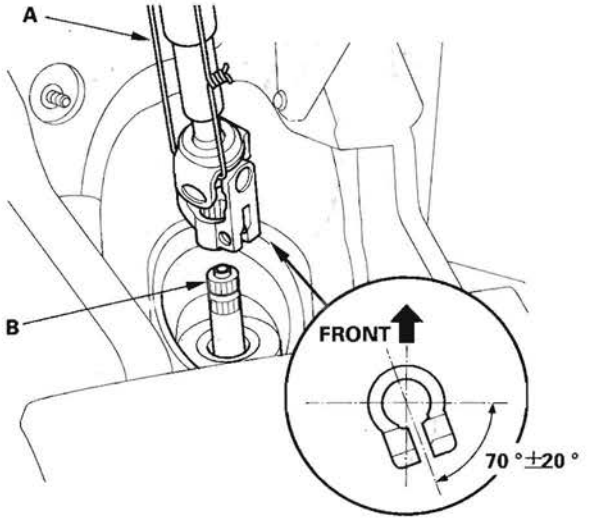

26. Align the bolt hole (A) on the steering joint with the groove (B) around the pinion shaft, and loosely install the joint bolt (C). Be sure that the joint bolt is securely in the groove in the pinion shaft. Pull on the steering joint to make sure that the steering joint is fully seated. Tighten the steering joint bolt to the specified torque.

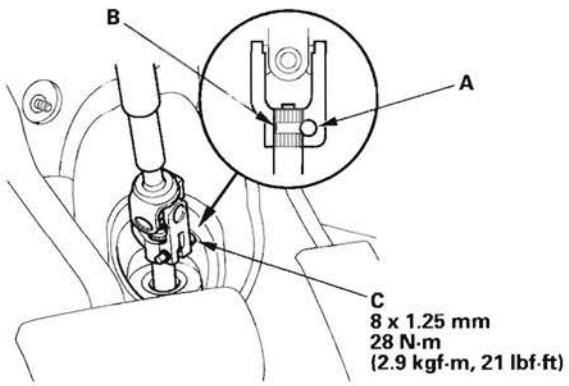

(cont'd)

Steering Gearbox Installation (cont'd)

27. Install the steering joint cover (A).

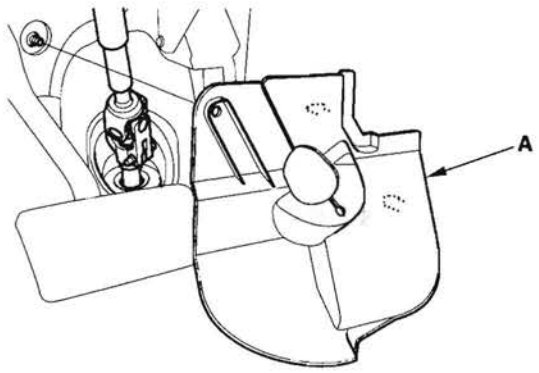

28. Install the driver's dashboard undercover (see page 20-100).

29. Install the front wheel, then set the wheels in the straight ahead position.

30. Install the steering wheel (see page 17-24).

31. Reconnect the negative cable to the battery.

32. Fill the system with power steering fluid, and bleed air from the system (see page 17-12).

33. After installation, do these tasks and checks.

- Turn the ignition switch ON (II); the SRS indicator should come on for about 6 seconds and then go off.
- Enter the anti-theft code for the audio and the navigation system (if equipped), then enter the XM audio presets (if equipped).
- Make sure the horn and turn signal switches work properly.
- Make sure the steering wheel switches work properly.
- Start the engine, allow it to idle, and turn the steering wheel from lock-to-lock several times to warm up to the fluid. Check the steering gearbox for leaks (see page 17-11).
- Check the steering wheel spoke angle. If steering spoke angles to the right and left are not equal (steering wheel and rack are not centered), correct the engagement of the joint/pinion shaft serrations, then adjust the front toe by turning the tie-rod ends, if necessary.
- Check the wheel alignment, and adjust it if necessary (see page 18-5).
- Set the clock (without Navi).

Tie-rod Ball Joint Boot Replacement

Special Tools Required
Bushing base 07JAF-SH20330

1. Remove the tie-rod ball joint from the knuckle (see step 12 on page 17-33).
2. Remove the tie-rod end from the rack end.
3. Remove the boot from the tie-rod end, and wipe the old grease off the ball pin.
4. Pack the lower area of the ball pin (A) with fresh multipurpose grease.

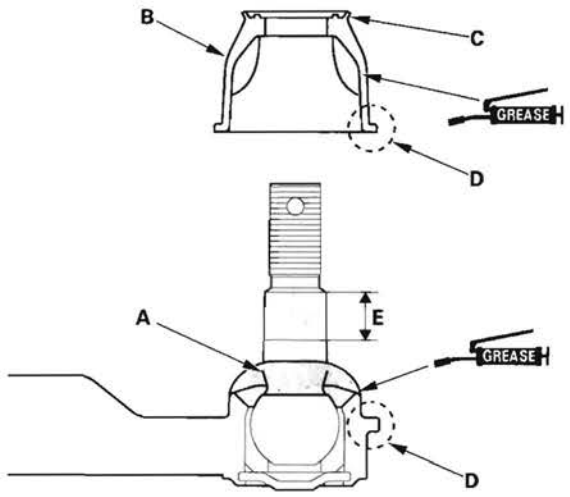

5. Pack the interior of the new boot (B) and lip (C) with fresh multipurpose grease.

   Note these items when installing new grease:
   - Keep grease off the boot mounting area (D) and the tapered section (E) of the ball pin.
   - Do not allow dust, dirt, or other foreign materials to enter the boot.

6. Install the new boot (A) using the bushing base. The boot must not have a gap at the boot installation sections (B). After installing the boot, check the ball pin tapered section for grease contamination, and wipe it if necessary.

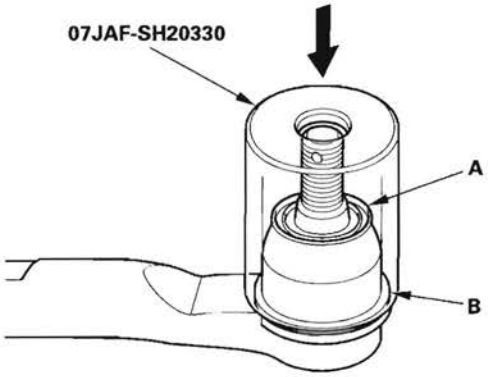

7. Install the tie-rod end to the rack end.
8. Install the tie-rod ball joint to the knuckle (see step 22 on page 17-55).
9. Check the wheel alignment, and adjust it if necessary (see page 18-5).

Gearbox Mount Cushion Replacement

1. Remove the steering gearbox (see page 17-32).

2. Position the 34 mm socket wrench (A) on the flange part of the gearbox housing with a washer (B), a 10 x 105 mm flange bolt (C), an appropriate size socket wrench (D), a washer (E), and a 10 mm nut (F) as shown.

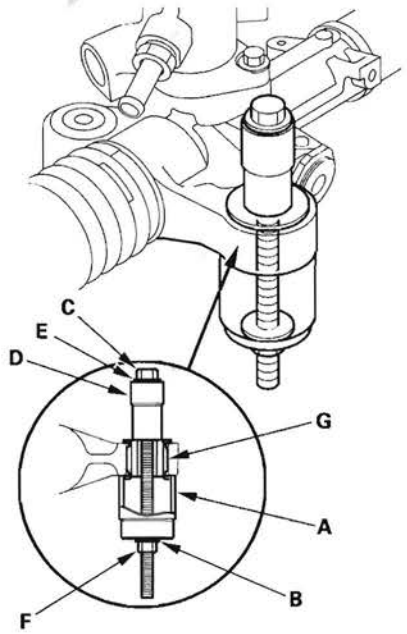

3. Hold the nut with a wrench, and tighten the flange bolt with another wrench. Remove the gearbox mount cushion (G).

4. Apply a mild soap and water solution to the new gearbox mount cushion surface (A), then place it on the gearbox mounting cushion hole.

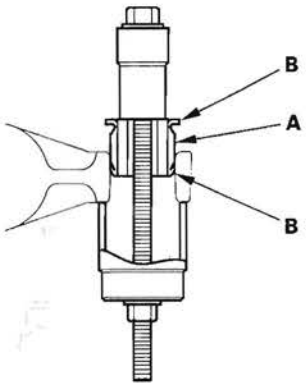

5. Position the 34 mm socket wrench on the flange part of the gearbox housing with a washer, a flange bolt, an appropriate size socket wrench, a washer, and a nut as shown.

6. Install the gearbox mount cushion by tightening the flange bolt until the mount cushion edges (B) contact the gearbox flange surface.

7. Install the steering gearbox (see page 17-52).

Suspension

Front and Rear Suspension

Special Tools 18-2
Component Location Index 18-3
Wheel Alignment 18-5
Wheel Bearing End Play Inspection 18-8
Wheel Runout Inspection 18-9
Wheel Bolt Replacement 18-10
Ball Joint Removal 18-11

Front Suspension

Knuckle/Hub/Wheel Bearing Replacement 18-12
Lower Ball Joint Replacement 18-18
Ball Joint Boot Replacement 18-19
Lower Arm Removal/Installation 18-19
Stabilizer Link Removal/Installation 18-21
Stabilizer Bar Replacement 18-22
Damper/Spring Removal and Installation 18-24
Damper/Spring Disassembly, Inspection, and Reassembly 18-27

Rear Suspension

Knuckle/Hub Bearing Unit Replacement 18-31
Upper Arm Replacement 18-36
Trailing Arm Replacement 18-37
Stabilizer Link Removal/Installation 18-38
Stabilizer Bar Replacement 18-38
Damper/Spring Removal and Installation 18-39
Damper/Spring Disassembly, Inspection, and Reassembly 18-42

TPMS (Tire Pressure Monitoring System) 18-45

Special Tools

Ref. No.	Tool Number	Description	Qty
①	07AAA-SVAA100	Strut Nut Adapter	1
②	07AAK-SNAA120	Universal Eyelet	1
③	07GAF-SD40100	Hub Dis/Assembly Tool	1
④	07GAF-SE00200	Attachment, 40 mm	1
⑤	07MAC-SL0A102	Ball Joint Remover, 32 mm	1
⑥	07MAC-SL0A202	Ball Joint Remover, 28 mm	1
⑦	071AF-S3VA000	Ball Joint Thread Protector, 14 mm	1
⑧	07746-0010600	Attachment, 72 x 75 mm	1
⑨	07749-0010000	Driver	1
⑩	07948-SB00101	Attachment, 96 mm	1
⑪	07965-SD90100	Support Base	1

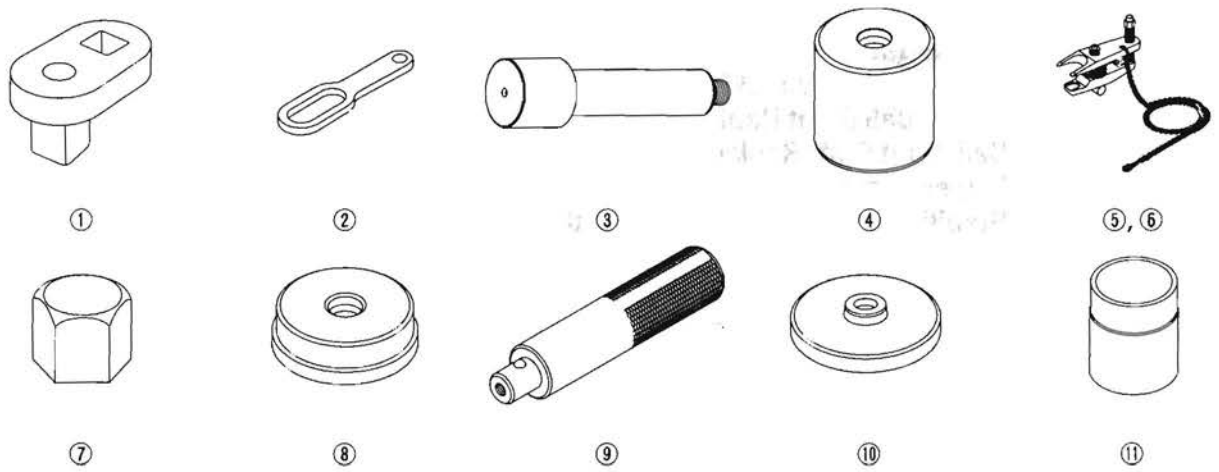

Component Location Index

Front Suspension

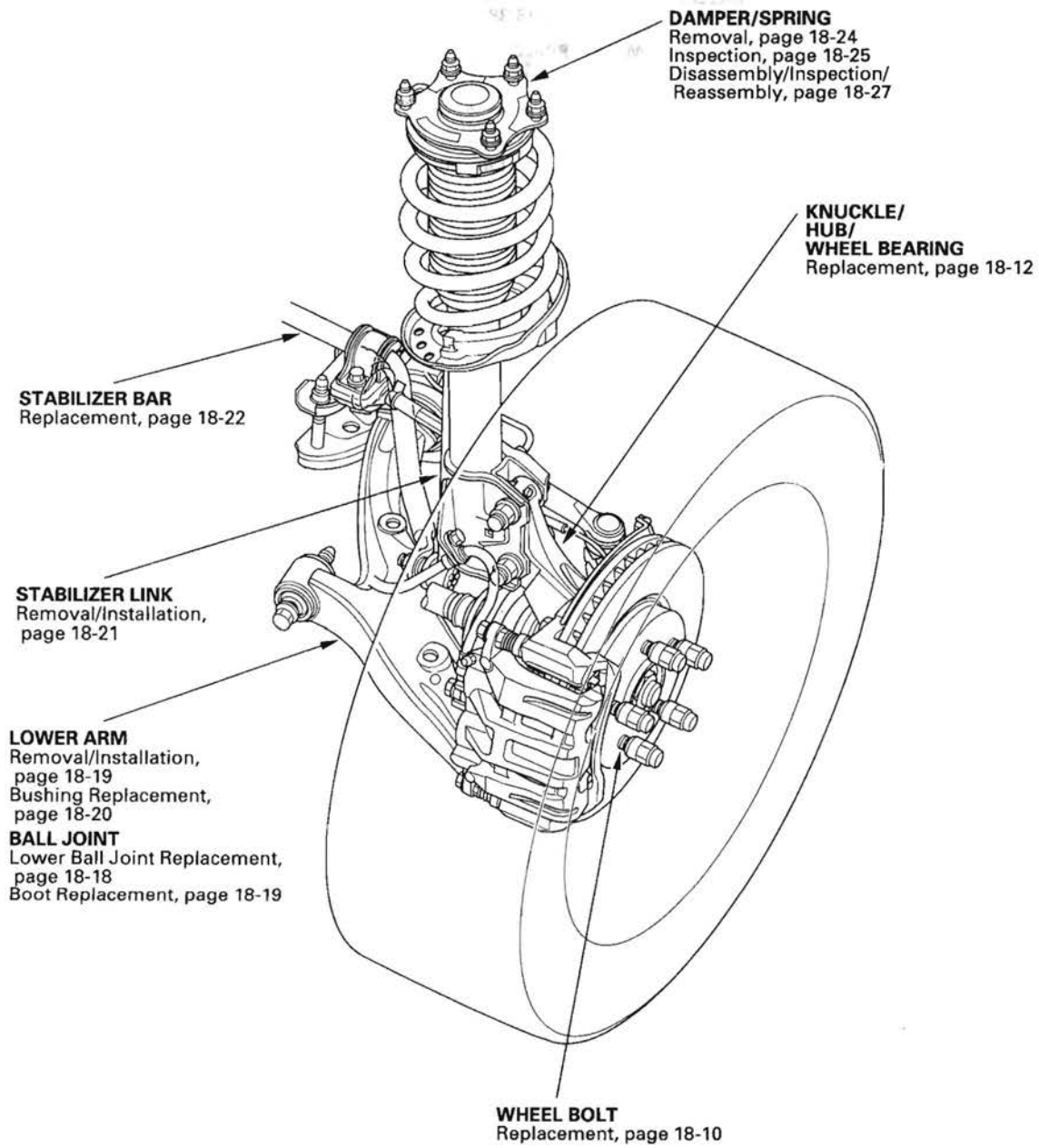

(cont'd)

Component Location Index (cont'd)

Rear Suspension

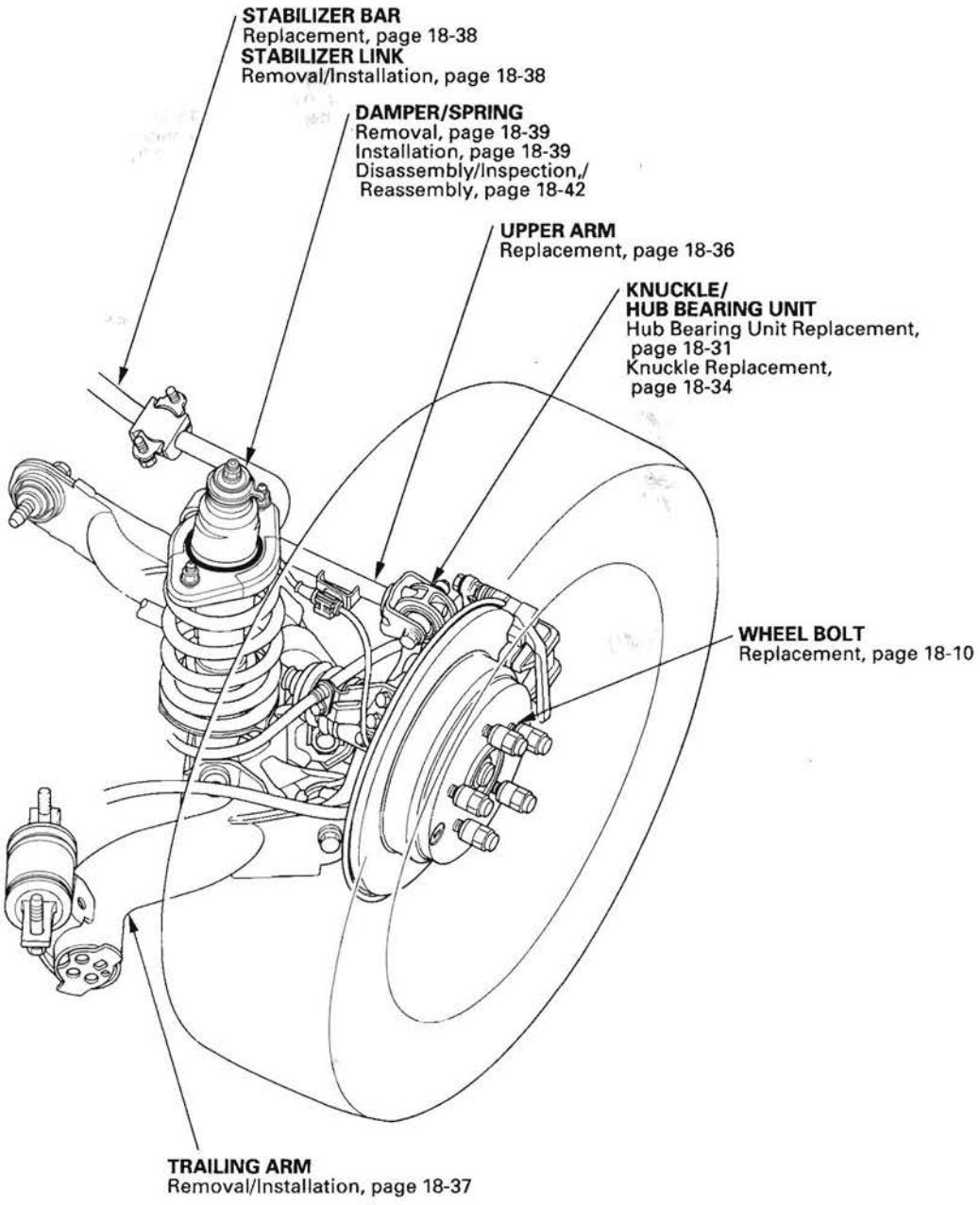

Wheel Alignment

The suspension can be adjusted for front camber, front toe, and rear toe. However, each of these adjustments are related to each other. For example, when you adjust camber, the toe will change. Therefore, you must adjust the front wheel alignment whenever you adjust camber or toe.

Pre-Alignment Checks

For proper inspection and adjustment of the wheel alignment, do these checks:

1. Release the parking brake to avoid an incorrect measurement.
2. Make sure the suspension is not modified.
3. Check the tire size and tire pressure.

   Tire size:
   Front/Rear: 225/65R17 102T

   Tire pressure:
   Front/Rear: 210 kPa (2.1 kgf/cm², 30 psi), cold

4. Check the runout of the wheels and tires (see page 18-9).
5. Check the suspension ball joints. (Hold a wheel with your hands, and move it up and down and right and left to check for wobbling.)

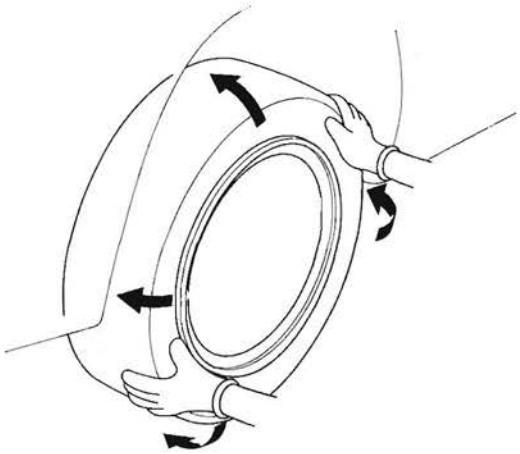

6. Bounce the vehicle up and down several times to settle the suspension.

Caster Inspection

Use commercially available computerized four wheel alignment equipment to measure wheel alignment (caster, camber, toe, and turning angle). Follow the equipment manufacturer's instructions.

Check the caster angle.

Caster angle: 3 °02 ′±1 °

- If the measurement is within specifications, measure the camber angle.
- If the measurement is not within specifications, check for bent or damaged suspension components.

Camber Inspection

Use commercially available computerized four wheel alignment equipment to measure wheel alignment (caster, camber, toe, and turning angle). Follow the equipment manufacturer's instructions.

Check the camber angle.

Camber angle:
Front: 0 °00 ′±30 ′
(Maximum difference between the front right and left side: 0 °35 ′)
Rear: −1 °00 ′±45 ′

- If the measurement for the front camber is outside the specification, go to front camber adjustment.
- If the measurement for the rear camber is outside the specification, check for bent or damaged suspension components.

(cont'd)

Wheel Alignment (cont'd)

Front Camber Adjustment

The front camber can be adjusted by exchanging one or both of the damper pinch bolts with a smaller diameter adjusting bolt. The difference between the adjusting bolt diameter and the pinch bolt hole diameter allows for a small range of adjustment.

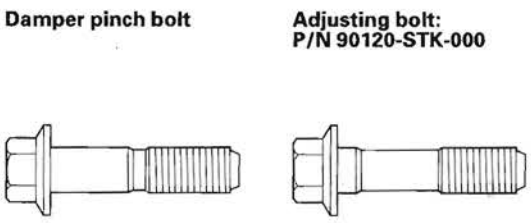

1. Raise the front of the vehicle, and support it with safety stands in the proper locations (see page 1-7).
2. Remove the front wheels.
3. Loosen the flange bolts (A), and adjust the camber by moving the bottom of the damper within the range of the damper pinch bolt free play.

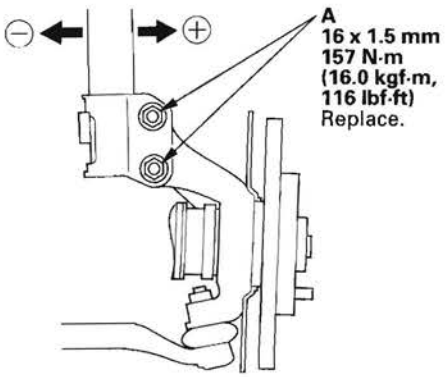

4. Tighten the damper pinch bolts to the specified torque.
5. Reinstall the front wheels. Lower the front of the vehicle to the ground, and bounce the front of the vehicle up and down several times to settle the suspension.
6. Measure the camber angle.
   - If the measurement is within specification, measure the toe.
   - If the measurement is not within specification, go to step 7.
7. Raise the front of the vehicle, and support it with safety stands in the proper locations (see page 1-7).
8. Remove the front wheels.
9. Replace the damper pinch bolts with the adjusting bolts (A), and adjust the camber angle.

   NOTE:
   - The camber angle can be adjusted up to ±25 ' (center of tolerance) by replacing one damper pinch bolt with the adjusting bolt.
   - The camber angle can be adjusted up to 50 ' by replacing both damper pinch bolts with the adjusting bolts.

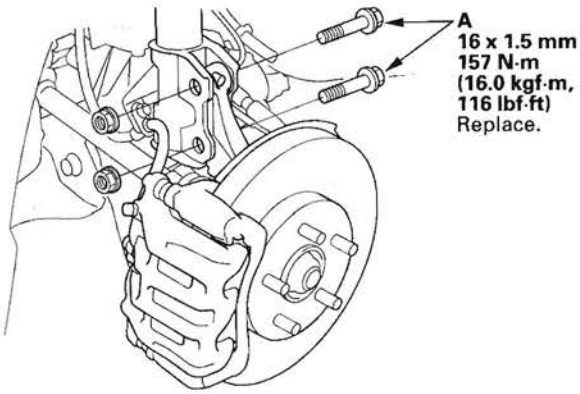

10. Tighten the adjusting bolts to the specified torque value.
11. Install the front wheels.
12. Lower the vehicle to the ground, and bounce the front of the vehicle up and down several times to settle the suspension.
13. Measure the camber angle. If the camber angle is not within specification, repeat steps 7 through 12 to readjust the camber angle. If the camber measurement is correct, measure toe-in, and adjust it if necessary.

Front Toe Inspection/Adjustment

Use commercially available computerized four wheel alignment equipment to measure wheel alignment (caster, camber, toe, and turning angle). Follow the equipment manufacturer's instructions.

1. Center the steering wheel spokes, and install a steering wheel holder tool.
2. Check the toe with the wheels pointed straight ahead.

   Front toe-in: 0±2 mm (0±0.08 in.)

   - If adjustment is required, go to step 3.
   - If no adjustment is required, go to rear toe inspection/adjustment.
3. Loosen the tie-rod locknuts (A) while holding the flat surface sections (B) of the tie-rod end with a wrench, and turn both tie-rods (C) until the front toe is within specifications.

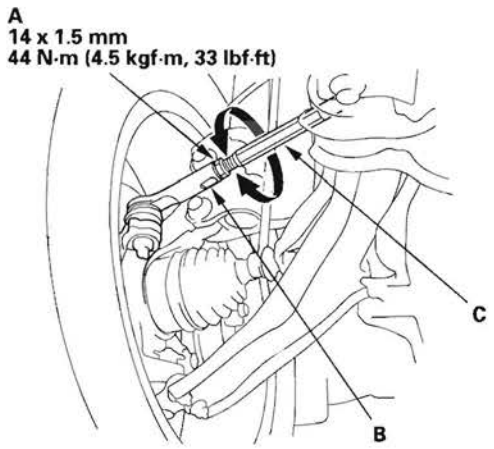

4. After adjusting, tighten the tie-rod locknuts. Reposition the rack-end boot if it is twisted or displaced.
5. Go to rear toe inspection/adjustment.

Rear Toe Inspection/Adjustment

Use commercially available computerized four wheel alignment equipment to measure wheel alignment (caster, camber, toe, and turning angle). Follow the equipment manufacturer's instructions.

1. Release the parking brake to avoid an incorrect measurement.
2. Check the toe.

   Rear toe-in: 2^{+2}_{-1} mm ($0.08^{+0.08}_{-0.04}$ in.)

   - If adjustment is required, go to step 3.
   - If no adjustment is required, remove the alignment equipment.
3. Hold the adjusting bolt (A) on the trailing arm (B), and remove the self-locking nut (C).

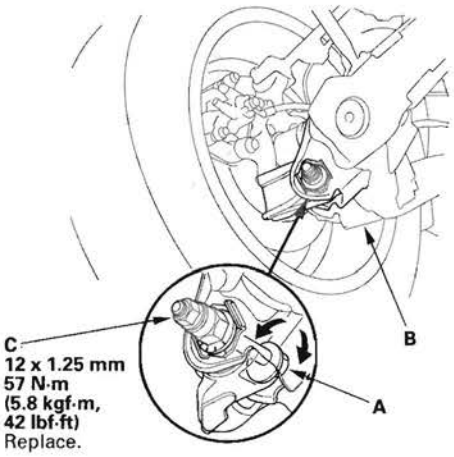

4. Replace the self-locking nut with a new one, and lightly tighten it.

   NOTE:
   - Always use a new self-locking nut whenever it has been loosened.
   - Reassemble the adjusting bolt and camplate with the eccentric facing up.
5. Adjust the rear toe by turning the adjusting bolt until the toe is correct.
6. Tighten the new self-locking nut while holding the adjusting bolt.

(cont'd)

Wheel Alignment (cont'd)

Turning Angle Inspection

Use commercially available computerized four wheel alignment equipment to measure wheel alignment (caster, camber, toe, and turning angle). Follow the equipment manufacturer's instructions.

1. Turn the wheel right and left while applying the brake, and measure the turning angle of both wheels.

   Turning angle:
   Inward wheel: 36 °29 ′ ±2 °
   Outward wheel: 31 °14 ′ (reference)

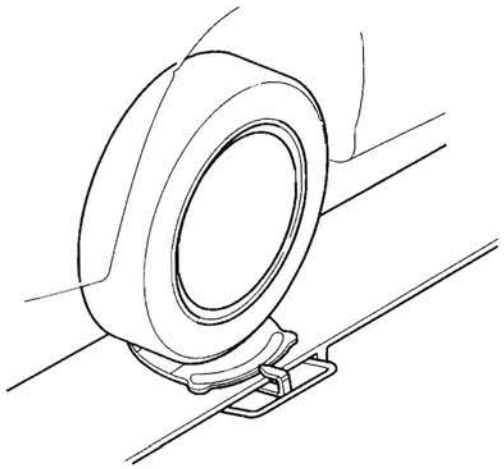

2. If the turning angle is not within the specifications, check for bent or damaged suspension components.

Wheel Bearing End Play Inspection

1. Raise the vehicle, and support it with safety stands in the proper locations (see page 1-7).

2. Remove the wheels.

3. Install suitable flat washers (A) and the wheel nuts. Tighten the nuts to the specified torque to hold the brake disc or disc/drum securely against the hub.

   Front

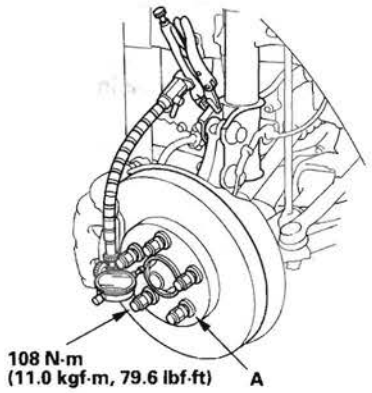

   Rear

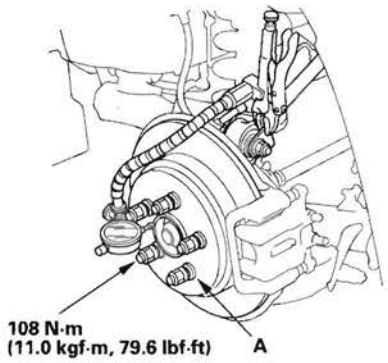

4. Attach the dial gauge. Place the dial gauge against the hub flange.

5. Measure the bearing end play by moving the disc or disc/drum inward and outward.

   Front/Rear:
   Standard: 0—0.05 mm (0—0.002 in.)

6. If the bearing end play measurement is more than the standard, replace the wheel bearing or hub bearing unit.

Wheel Runout Inspection

NOTE: When measuring the front wheel runout, turn the back side of the wheel slowly by hand.

1. Raise the vehicle, and support it with safety stands in the proper locations (see page 1-7).

2. Check for bent or deformed wheels.

3. Set up the dial gauge as shown, and measure axial runout by turning the wheel.

Front and rear wheel axial runout:
Standard:
Steel wheel: **0—1.0 mm (0—0.04 in.)**
Aluminum wheel: **0—0.7 mm (0—0.03 in.)**
Service limit: **2.0 mm (0.08 in.)**

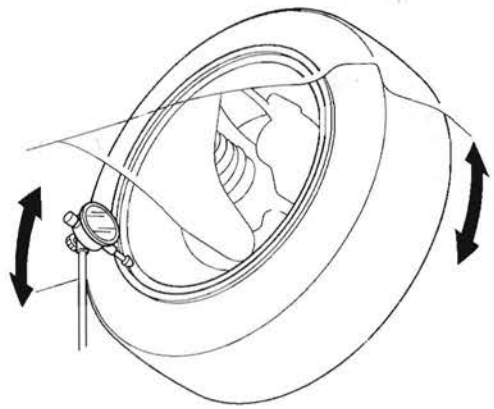

4. Reset the dial gauge to the position shown, and measure the radial runout.

Front and rear wheel radial runout:
Standard:
Steel wheel: **0—1.0 mm (0—0.04 in.)**
Aluminum wheel: **0—0.7 mm (0—0.03 in.)**
Service limit: **1.5 mm (0.06 in.)**

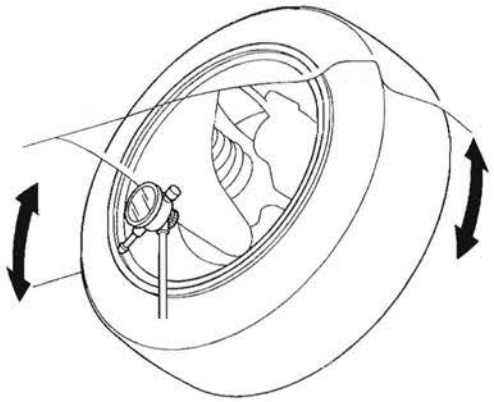

5. If the wheel runout is not within the specification, check the wheel bearing end play (see page 18-8), and make sure the mating surfaces on the brake disc or disc/drum and the inside of the wheel are clean.

6. If the bearing end play is within the specification but the wheel runout is more than the service limit, replace the wheel.

Wheel Bolt Replacement

NOTICE

- Do not use a hammer or air or electric impact tools to remove and install the wheel bolts.
- Be careful not to damage the threads of the wheel bolts.

1. Remove the front hub or rear hub bearing unit: front (see page 18-13), rear (see page 18-32).

2. Separate the wheel bolt (A) from the hub (B) using a hydraulic press. Support the hub with hydraulic press attachments (C) or equivalent tools.

   NOTE:
   - Before installing the new wheel bolt, clean the mating surface on the bolt and the hub.
   - The illustration shows a front hub.

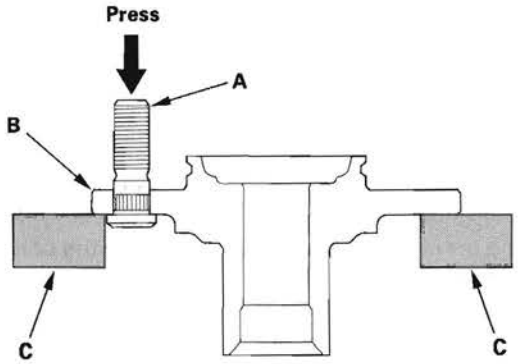

3. Insert the new wheel bolt into the hub while aligning the splined surfaces on the hub hole with the wheel bolt.

   NOTE:
   - Degrease all around the wheel bolt and the threaded section of the nut.
   - Make sure the wheel bolt is installed vertically in relation to the hub disc surface.
   - Do not install the nut and washers that have been used as tools on a vehicle.

4. Press in the wheel bolt using a hydraulic press. Support the hub with hydraulic press attachments or equivalent tools.

5. Install the front hub or rear hub bearing unit: front (see page 18-13), rear (see page 18-32).

   NOTE: If you cannot tighten the wheel nut to the specified torque value when installing the wheel, replace the front hub or rear hub bearing unit as an assembly.

Ball Joint Removal

Special Tools Required
- Ball joint remover, 32 mm 07MAC-SL0A102
- Ball joint remover, 28 mm 07MAC-SL0A202

NOTICE

Always use a ball joint remover to disconnect a ball joint. Do not strike the housing or any other part of the ball joint connection to disconnect it.

07MAC-SL0A102 or 07MAC-SL0A202

1. Install a hex nut (A) or ball joint thread protector onto the threads of the ball joint (B). Make sure the nut is flush with the ball joint pin end to prevent damage to the thread end of the ball joint pin.

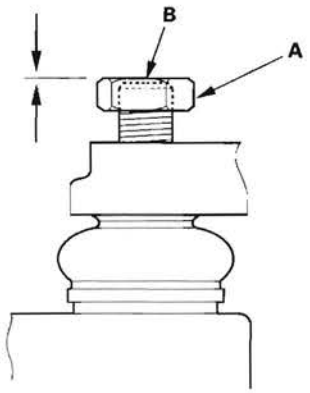

2. Apply grease to the ball joint remover on the areas shown (A). This will ease installation of the tool and prevent damage to the pressure bolt (B) threads.

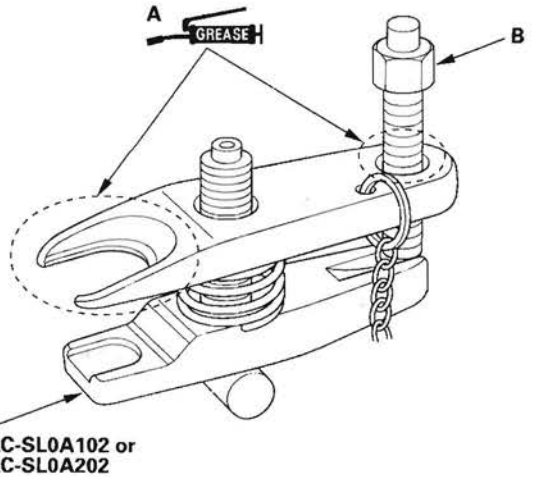

3. Loosen the pressure bolt (A), and install the ball joint remover as shown. Insert the jaws carefully, making sure not to damage the ball joint boot. Adjust the jaw spacing by turning the adjusting bolt (B).

   NOTE: Fasten the safety chain (C) securely to a suspension arm or the subframe (D). Do not fasten it to a brake line or wire harness.

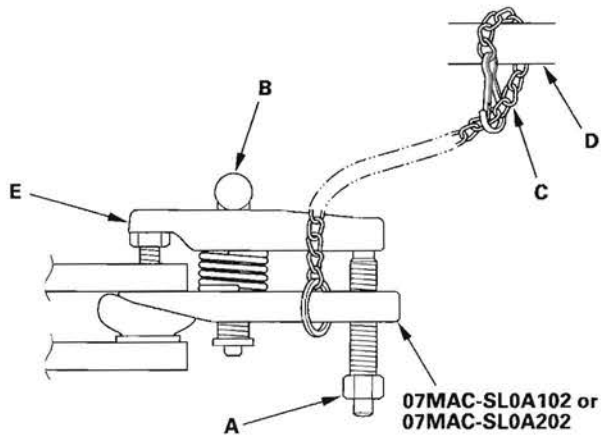

4. After adjusting the adjusting bolt, make sure the head of the adjusting bolt is in the position shown to allow the jaw (E) to pivot.

5. With a wrench, tighten the pressure bolt until the ball joint pin pops loose from the ball joint pin hole. If necessary, apply penetrating type lubricant to loosen the ball joint pin.

   NOTE: Do not use pneumatic or electric tools on the pressure bolt.

6. Remove the ball joint remover, then remove the nut from the end of the ball joint pin, and pull the ball joint out of the ball joint pin hole. Inspect the ball joint boot, and replace it if damaged.

Knuckle/Hub/Wheel Bearing Replacement

Exploded View

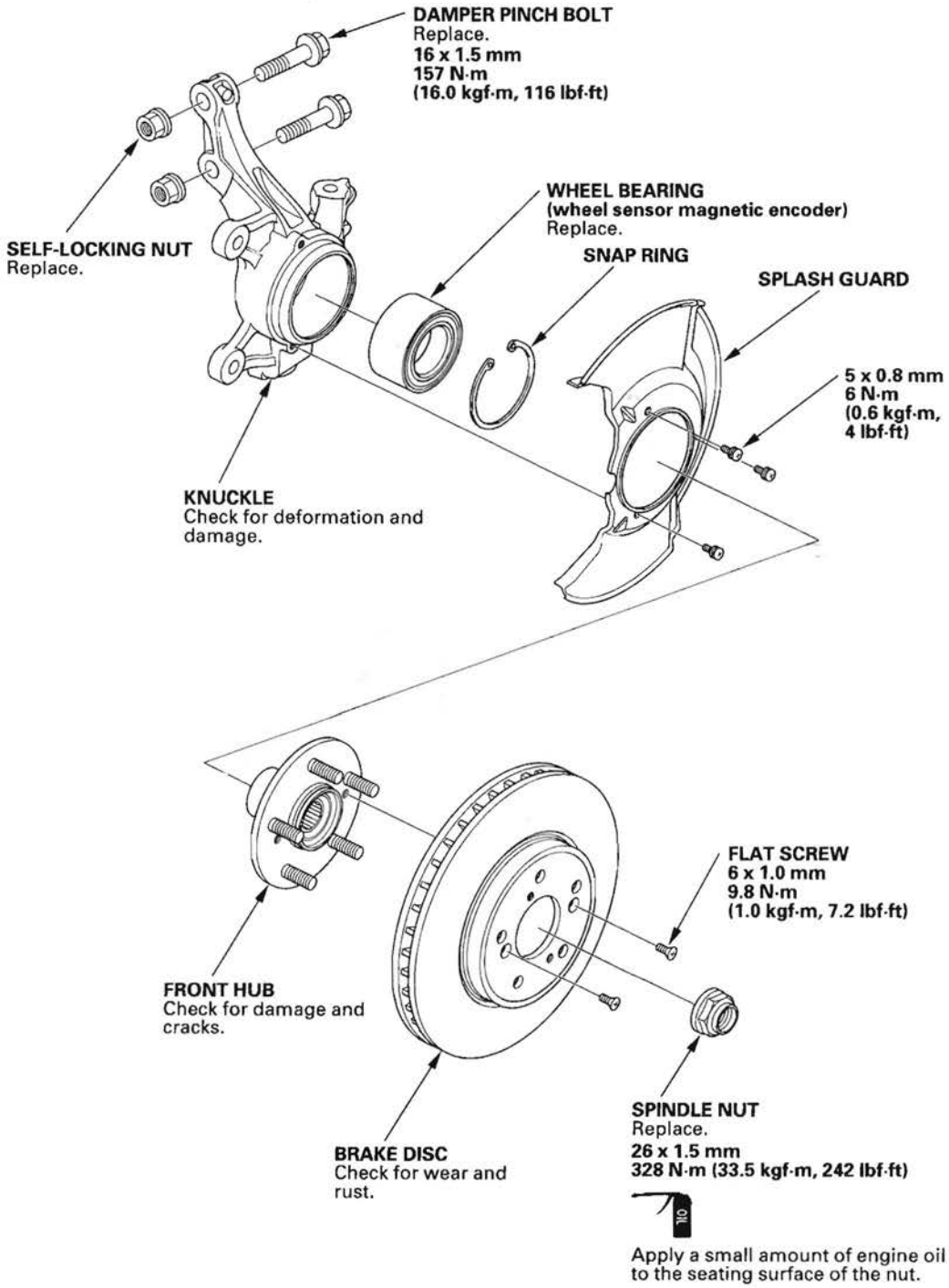

Special Tools Required
- Hub dis/assembly tool 07GAF-SD40100
- Ball joint remover, 32 mm 07MAC-SL0A102
- Ball joint remover, 28 mm 07MAC-SL0A202
- Ball joint thread protector, 14 mm 071AF-S3VA000
- Attachment, 72 x 75 mm 07746-0010600
- Driver 07749-0010000
- Attachment, 96 mm 07948-SB00101
- Support base 07965-SD90100

Knuckle/Hub Replacement

1. Raise the front of the vehicle, and support it with safety stands in the proper locations (see page 1-7).

2. Remove the wheel nuts (A) and the front wheel.

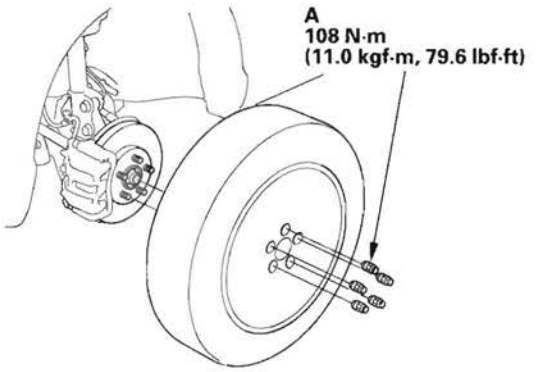

3. Remove the brake hose mounting bolt (A).

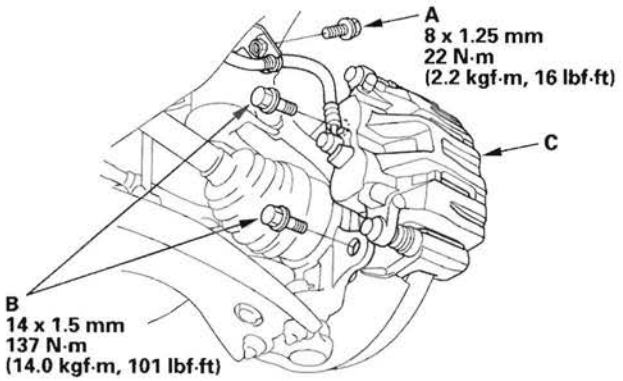

4. Remove the brake caliper bracket mounting bolts (B), and remove the caliper assembly (C) from the knuckle. To prevent damage to the caliper assembly or brake hose, use a short piece of wire to hang the caliper assembly from the undercarriage. Do not twist the brake hose excessively.

5. Remove the wheel sensor (A) from the knuckle (B). Do not disconnect the wheel sensor connector.

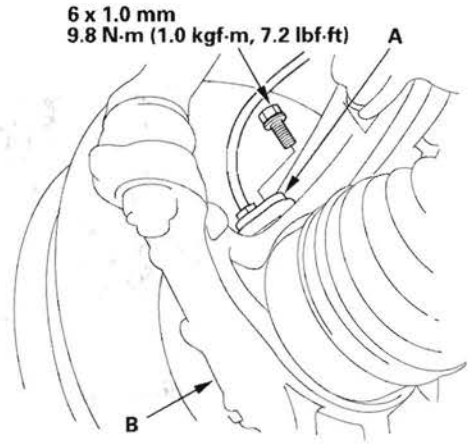

6. Raise the stake (A), then remove the spindle nut (B).

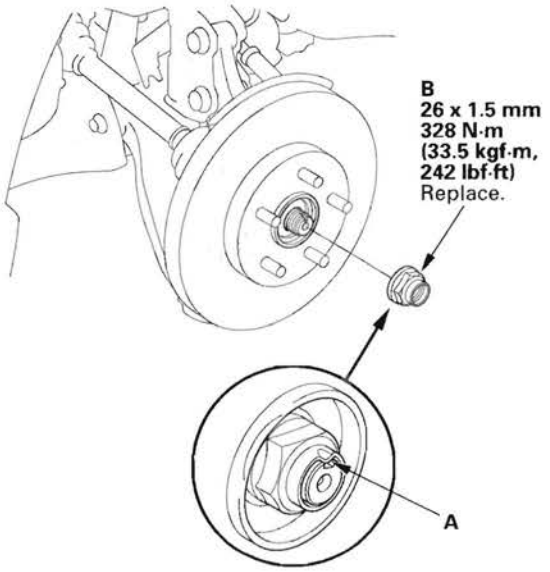

(cont'd)

Knuckle/Hub/Wheel Bearing Replacement (cont'd)

7. Remove the 6 mm brake disc retaining screws (A).

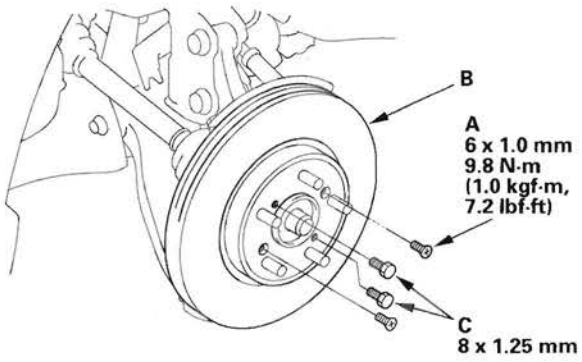

8. Remove the brake is stuck (B) from the hub.

   NOTE: If the brake disc has clung to the hub, screw two 8 x 1.25 mm bolts (C) into the brake disc to push it away from the hub. Turn each bolt 90 degrees to prevent the brake disc from binding.

9. Check the front hub for damage and cracks.

10. Remove the cotter pin (A) from the tie-rod end ball joint, then remove the nut (B).

    NOTE: During installation, install the new cotter pin after tightening the nut, and bend its end as shown.

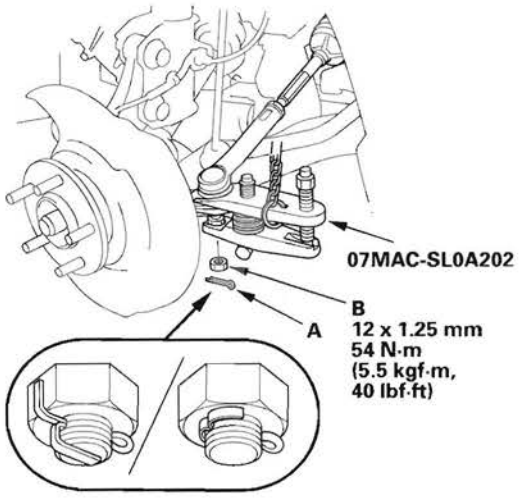

11. Disconnect the tie-rod ball joint from the knuckle using the ball joint remover (see page 18-11).

12. Remove the lock pin (A) from the lower ball joint pin (B) then remove the castle nut (C).

    NOTE: During installation, install the lock pin after tightening the new castle nut.

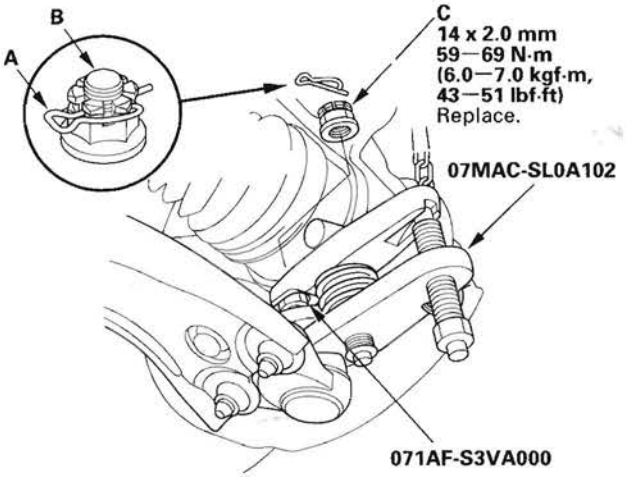

13. Disconnect the lower ball joint from the lower arm.

14. Remove the damper pinch bolts (A) and the self-locking nuts (B) from the damper.

    NOTE: During installation, install new damper pinch bolts and new self-locking nuts.

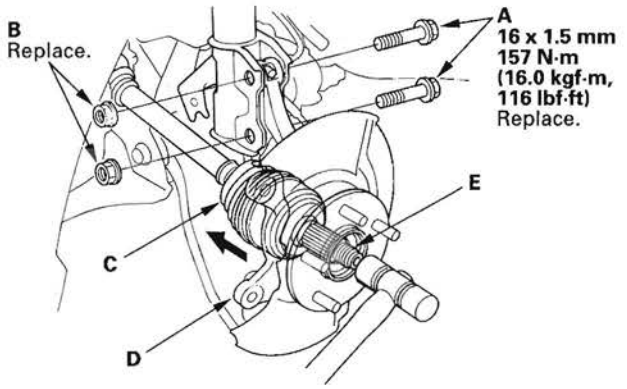

15. Remove the driveshaft outboard joint (C) from the knuckle (D) by tapping the driveshaft end (E) with a plastic hammer while drawing the hub outward, then remove the knuckle.

    NOTE:
    - Do not pull the driveshaft end outward. The inner driveshaft joint may come apart.
    - During installation, apply grease to the mating surface of the wheel bearing and the driveshaft outboard joint (see page 16-18).

16. Install the knuckle/hub in the reverse order of removal, and note these items:

    - Be careful not to damage the ball joint boot when installing the knuckle.
    - Tighten all mounting hardware to the specified torque values.
    - Before connecting the lower ball joint to the knuckle, degrease the threaded section and tapered portion of the ball joint pin, the knuckle connecting hole, the threaded section, and mating surface of the castle nut.
    - First install all the components, and lightly tighten the bolts and nuts, then raise the suspension to load it with the vehicle's weight before fully tightening to the specified torque values.
    - Torque the castle nut to the lower torque specification, then tighten it only far enough to align the slot with the ball joint pin hole. Do not align the castle nut by loosening it.
    - Use a new spindle nut during reassembly.
    - Before installing the spindle nut, apply a small amount of engine oil to the seating surface of the nut. After tightening, use a drift to stake the spindle nut shoulder against the driveshaft.
    - Before installing the brake disc, clean the mating surface of the front hub and the inside of the brake disc.
    - Before installing the wheel, clean the mating surface of the brake disc and the inside of the wheel.
    - Check the wheel alignment, and adjust it if necessary (see page 18-5).

(cont'd)

Knuckle/Hub/Wheel Bearing Replacement (cont'd)

Wheel Bearing Replacement

1. Separate the hub (A) from the knuckle (B) using the hub dis/assembly tool and a hydraulic press. Hold the knuckle with the attachment (C) of the hydraulic press or equivalent tool. Be careful not to deform the splash guard (D). Hold onto the hub to keep it from falling when pressed clear.

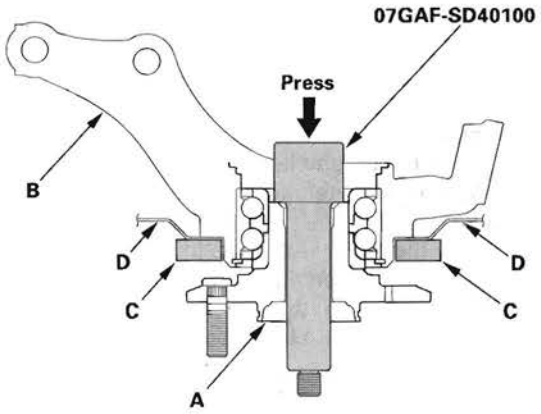

2. Press the wheel bearing inner race (A) off of the hub (B) using the hub dis/assembly tool, a commercially available bearing separator (C), and a press.

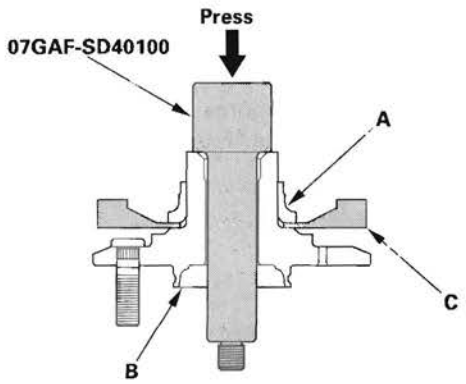

3. Remove the splash guard (A) and the snap ring (B) from the knuckle (C).

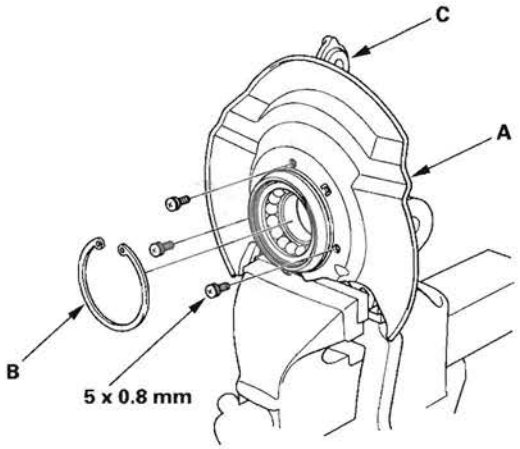

4. Press the wheel bearing (A) out of the knuckle (B) using the attachment, the driver, and a press.

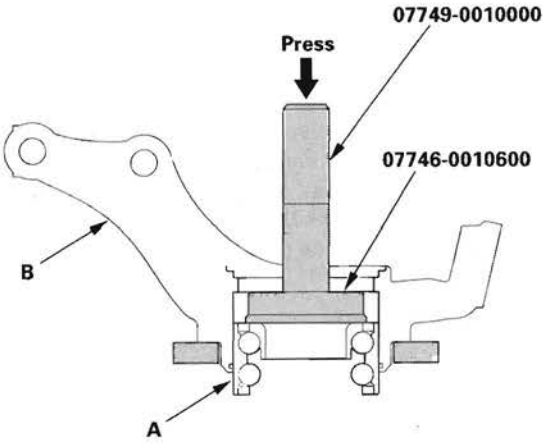

5. Wash the knuckle and hub thoroughly in high flash-point solvent before reassembly.

6. Press a new wheel bearing (A) into the knuckle (B) using the old bearing (C), a steel plate (D), the attachment, the support base, and a press.

   NOTE:
   - Install the wheel bearing with the wheel sensor magnetic encoder (E) (brown color) toward the inside of the knuckle.
   - Remove any oil, grease, dust, metal debris, and other foreign material from the encoder surface.
   - Keep all magnetic tools away from the encoder surface.
   - Be careful not to damage the encoder surface when you insert the wheel bearing.

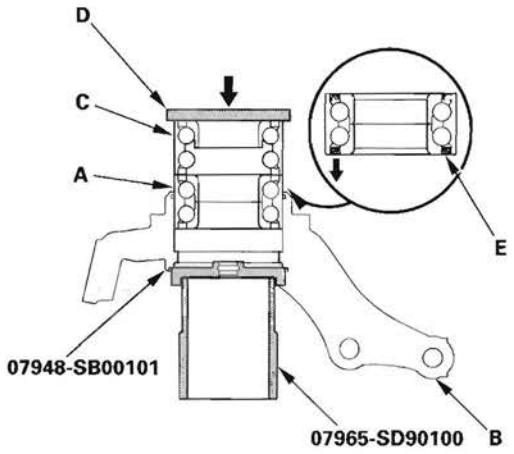

7. Install the snap ring (A) securely in the knuckle (B).

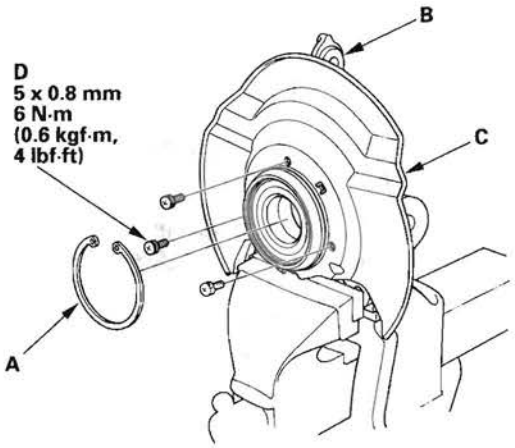

8. Install the splash guard (C), and tighten the screws (D) to the specified torque value.

9. Install the hub (A) onto the knuckle (B) using the attachment, the driver, the support base, and a hydraulic press. Be careful not to distort the splash guard (C).

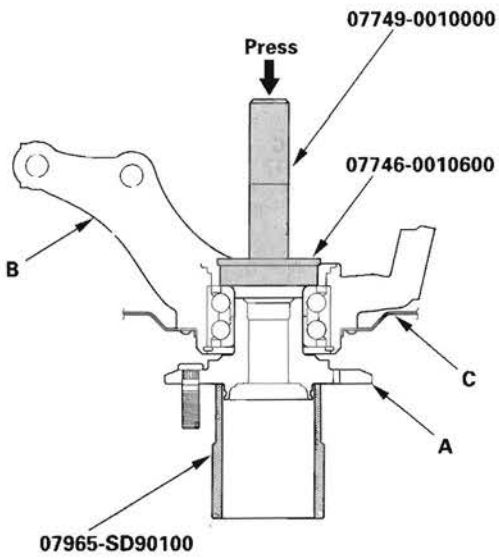

Lower Ball Joint Replacement

Special Tools Required
- Ball joint remover, 32 mm 07MAC-SL0A102
- Ball joint thread protector, 14 mm 071AF-S3VA000

1. Remove the front wheel (see page 18-13).

2. Remove the flange bolt and flange nuts from the lower arm (A).

   NOTE: During installation, install a new flange bolt and new flange nuts. After lightly tightening all three fasteners, tighten them to the specified torque in the following order; the nut on the front (B), the nut on the rear (C), then the bolt (D).

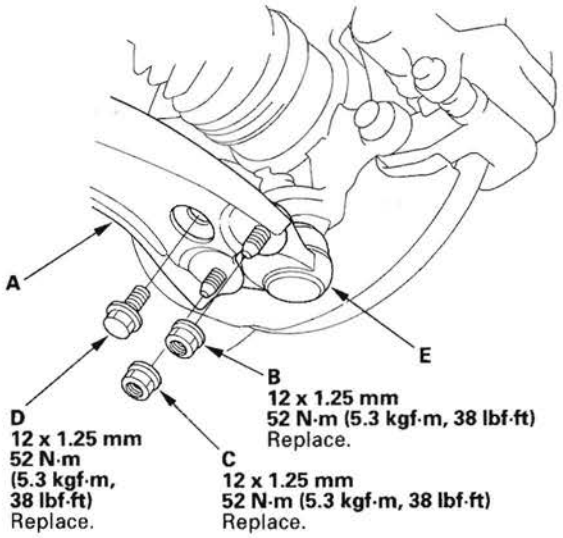

3. Disconnect the lower ball joint (E) from the lower arm.

4. Remove the lock pin (A) from the lower ball joint pin (B) them remove the castle nut (C).

   NOTE: During installation, install the lock pin after tightening new castle nut.

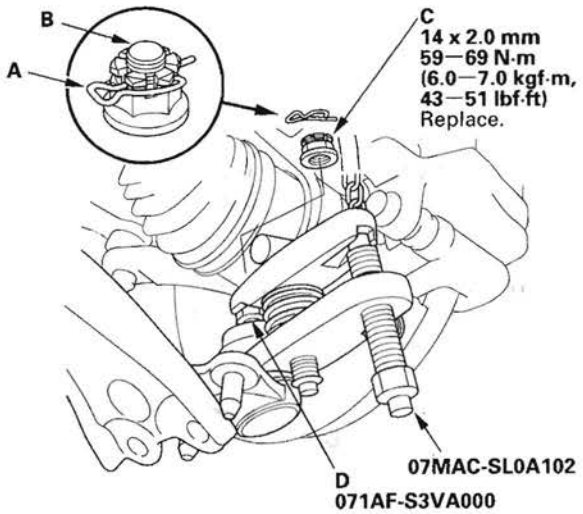

5. Install the ball joint thread protector (D).

6. Disconnect the lower ball joint from the knuckle using the ball joint remover (see page 18-12), then remove the lower ball joint.

7. Install the lower ball joint in the reverse order of removal, and note these items:

   - First install all the components, and lightly tighten the bolts and nuts, then tighten the lower ball joint to the lower arm to the specified torque. Raise the suspension to load it with the vehicle's weight before fully tightening the lower ball joint to the knuckle to the specified torque values.
   - Torque the castle nut to the lower torque specification, then tighten it only far enough to align the slot with the ball joint pin hole. Do not align the castle nut by loosening it.
   - Tighten all mounting hardware to the specified torque values.
   - Before installing the wheel, clean the mating surface of the brake disc and the inside of the wheel.
   - Check the wheel alignment, and adjust it if necessary (see page 18-5).

Ball Joint Boot Replacement

Special Tools Required
Attachment, 40 mm 07GAF-SE00200

1. Remove the lower ball joint (see page 18-18).
2. Remove the boot.
3. Pack the interior and lip (A) of a new boot with grease. Keep the grease off of the boot-to-lower ball housing mating surfaces (B).

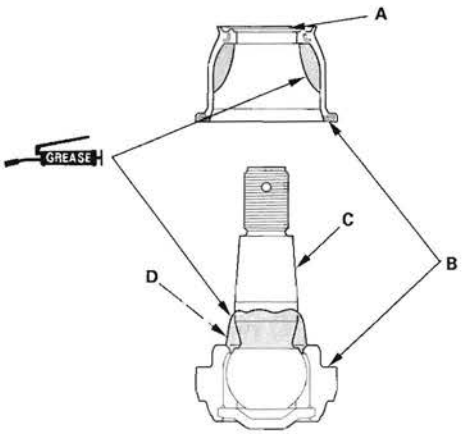

4. Wipe the grease off the tapered portion of the pin (C), and pack fresh grease into the base (D). Do not let dirt or other foreign materials get into the boot.
5. Install the boot on the ball joint, then squeeze it gently to force out any air.
6. Press the boot with the attachment until the bottom seats on the lower ball housing evenly all the way around.



7. After installing a boot, wipe any grease off the exposed portion of the ball joint pin.
8. Install the lower ball joint (see page 18-18).

Lower Arm Removal/Installation

Removal/Installation

1. Raise the front of the vehicle, and support it with safety stands in the proper locations (see page 1-7).
2. Remove the front wheel.
3. Remove the flange bolts (A) and the bushing holder (B).

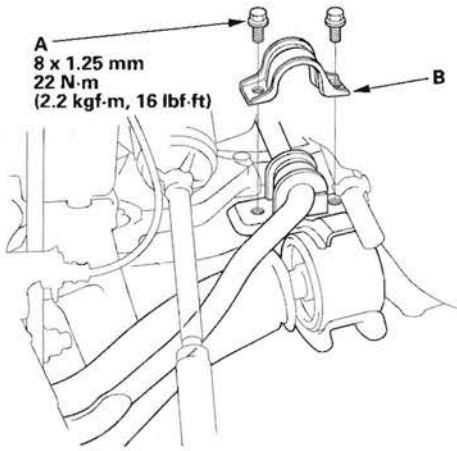

4. Remove the flange bolt and flange nuts from the lower arm (A).

   NOTE: During installation, install a new flange bolt and new flange nuts. After lightly tightening all three fasteners, tighten them to the specified torque in the following order; the nut on the front (B), the nut on the rear (C), then the bolt (D).

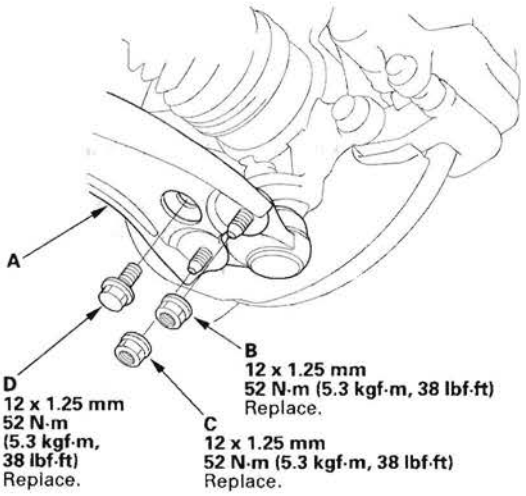

5. Disconnect the lower ball joint from the lower arm.

(cont'd)

Lower Arm Removal/Installation (cont'd)

6. Remove the lower arm mounting bolt (A).

   NOTE: During installation, install a new mounting bolt.

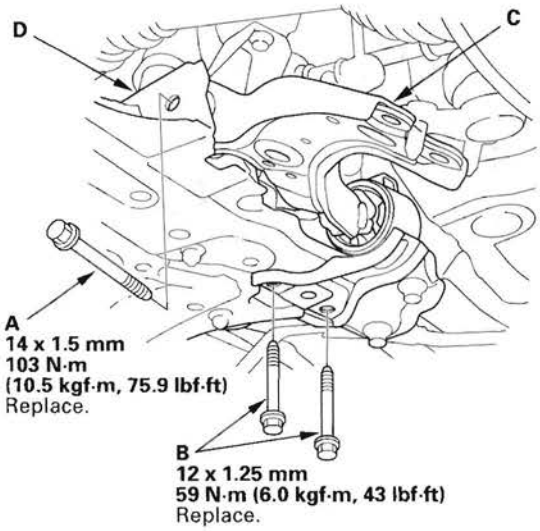

7. Remove the lower arm mounting bolts (B), then remove the lower arm (C) from the front suspension subframe (D).

   NOTE: During installation, install new mounting bolts.

8. Install the lower arm in the reverse order of removal, and note these items:

   - First install all the components, and lightly tighten the bolts and nuts, then raise the suspension to load it with the vehicle's weight before fully tightening to the specified torque values.
   - Tighten all mounting hardware to the specified torque values.
   - Before installing the wheel, clean the mating surface of the brake disc and the inside of the wheel.
   - Check the wheel alignment, and adjust it if necessary (see page 18-5).

Bushing Replacement

1. Press out the lower arm (A) with the suitable socket wrench and a hydraulic press, and remove the lower arm from the bushing (B).

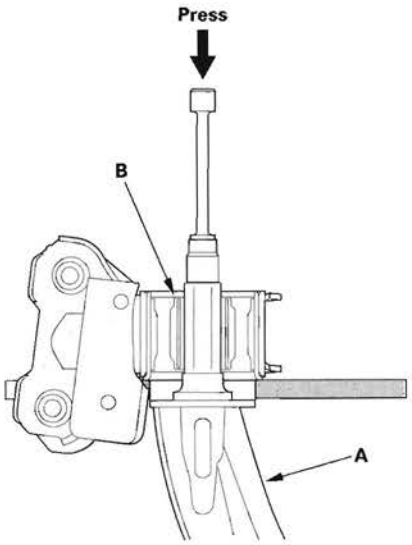

2. Apply mild soap and water to the new bushing surface.

3. Align the angle of the lower arm (A) and the tab portion (B) of the bushing (C). Press in the bushing by hand first.

   NOTE:
   - The installed bushing's tab portion points upward and downward to the installed lower arm.
   - Make sure the up/down direction of the bushing.

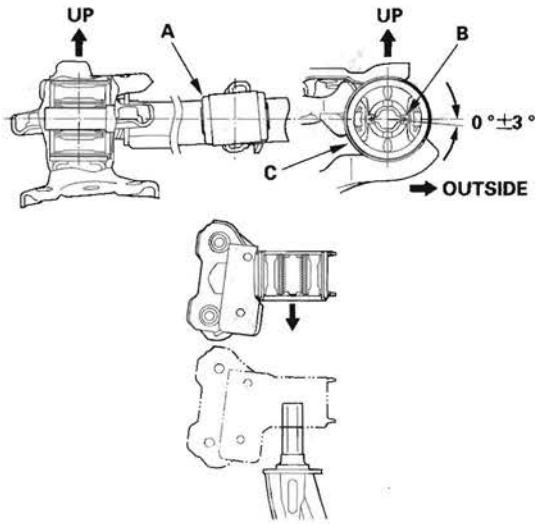

4. Press in the bushing with a suitable socket wrench and a hydraulic press.

5. Adjust the distance between the top of the lower arm and the bushing surface to the dimension shown.

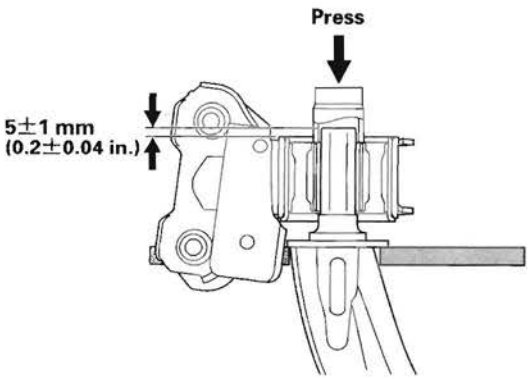

Stabilizer Link Removal/Installation

1. Raise the front of the vehicle, and support it with safety stands in the proper locations (see page 1-7).

2. Remove the front wheel.

3. Remove the flange nuts while holding the respective joint pin (A) with a hex wrench (B), then remove the stabilizer link (C).

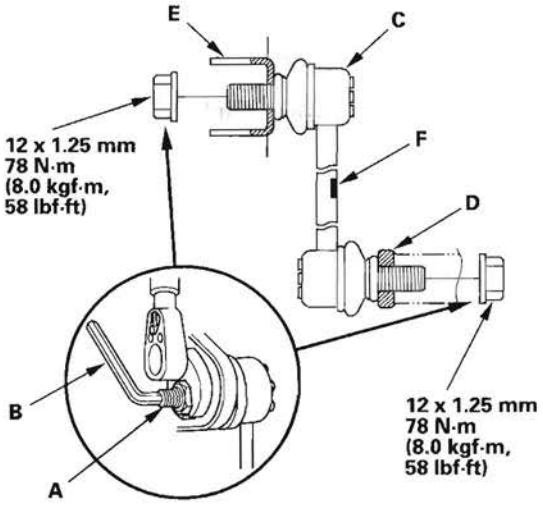

4. Install the stabilizer link on the stabilizer bar (D) and the damper (E) with the joint pins set at the center of their range of movement.

   NOTE: The stabilizer link has a paint mark (F). Align the paint mark on the stabilizer link facing inward.

5. Install the flange nuts, and lightly tighten them.

6. Place a jack under the lower arm, and raise the suspension to load it with the vehicle's weight.

7. Tighten the flange nuts to the specified torque value while holding the respective joint pin with a hex wrench.

8. Clean the mating surface of the brake disc and the inside of the wheel, then install the rear wheel.

Stabilizer Bar Replacement

Special Tools Required
- Universal eyelet 07AAK-SNAA120
- Front subframe adapter VSB02C000016 *
- Engine support hanger, A and Reds AAR-T-12566 *

* Available through the American Honda Tool and Equipment program 888-424-6857

1. Raise the front of the vehicle, and support it with safety stands in the proper locations (see page 1-7).
2. Remove the front wheels.
3. Disconnect both stabilizer links from the stabilizer bar (see page 18-21).
4. Remove the under-cowl cover (see page 20-167).
5. Attach the universal eyelet to the cylinder head.

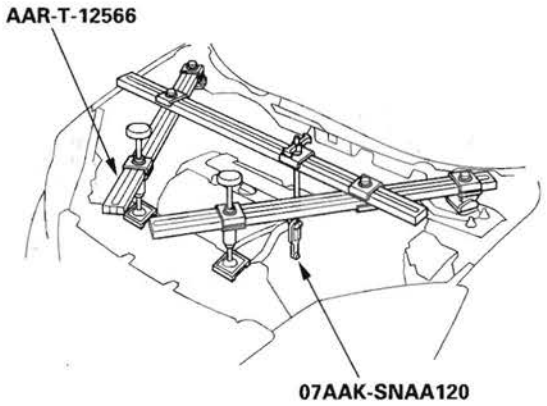

6. Install the engine support hanger (AAR-T-12566) to the vehicle, and attach the hook to the universal eyelet.
7. Attach the front subframe adapter (A) to the front subframe (B) by hanging the hook of the special tool over the front of the subframe, then tighten the special tool screw.

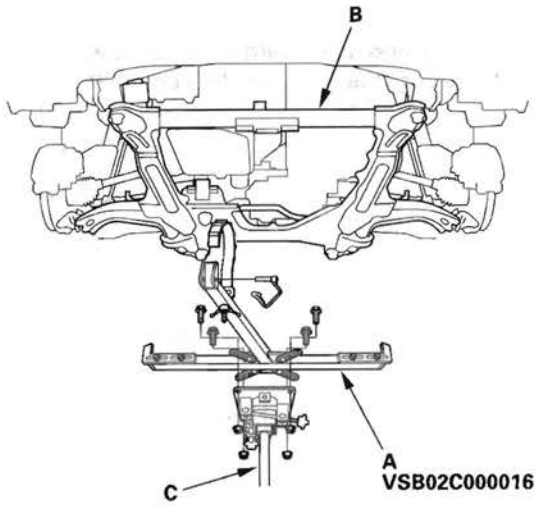

8. Raise the jack (C) and line up the slots in the arms with the bolt holes on the corner of the jack base, then attach them with bolts securely.

9. Loosen the front subframe front mounting bolt (A) on the right and left of the vehicle so they are about 30 mm (1 3/16 in.) from the mounting surface.

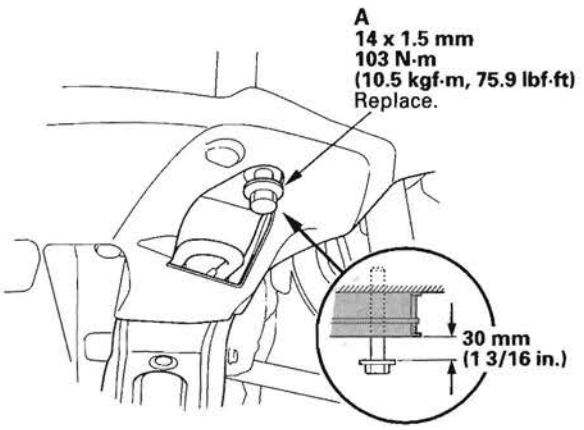

10. Support the front subframe securely by raising the special tool, then loosen the 14 mm special bolts (A) so they are about 30 mm (1 3/16 in.) from the mounting surface.

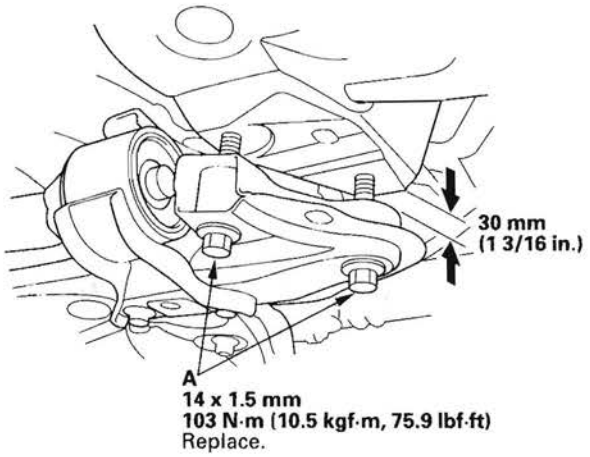

11. Lower the jack supporting the front subframe with the special tool slowly until the front subframe has dropped about 30 mm (1 3/16 in.).

12. Remove the flange bolts (A) and bushing holders (B), then remove the bushings (C).

NOTE: During installation align the paint marks (D) on the stabilizer bar with the sides of the bushings.

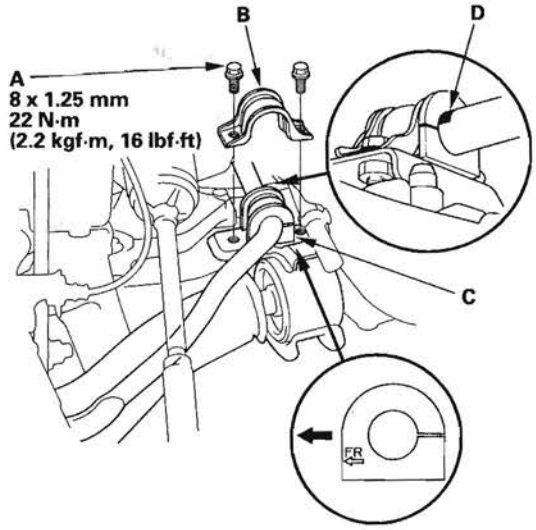

13. Install the stabilizer bar in the reverse order of removal, and note these items:

- Note the right and left direction of the stabilizer bar.
- Align the paint marks on the stabilizer bar with the sides of the bushings.
- Note the fore/aft direction of the bushing holders.
- Raise the front subframe up with the jack and special tool until it contacts the body frame (see page 20-198), then tighten the mounting bolts to the specified torque.
- Refer to Stabilizer Link Removal/Installation to connect the stabilizer bar to the links (see page 18-21).
- Check the front wheel alignment, and adjust it if necessary (see page 18-5).

Damper/Spring Removal and Installation

Removal

1. Turn the ignition switch ON (II), then turn on the windshield wipers. Turn the ignition switch off when the wipers are near the A-pillars.
2. Raise the front of the vehicle, and support it with safety stands in the proper locations (see page 1-7).
3. Remove the front wheel.
4. Remove the wheel sensor harness guide (A), the harness clip (B), and the brake hose (C) from the damper (D). Do not disconnect the wheel sensor connector.

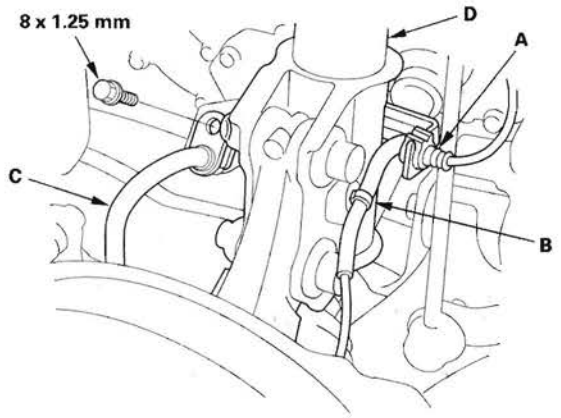

5. Remove the flange nut (A), while holding the joint pin (B) with a hex wrench (C), and disconnect the stabilizer link (D) from the damper.

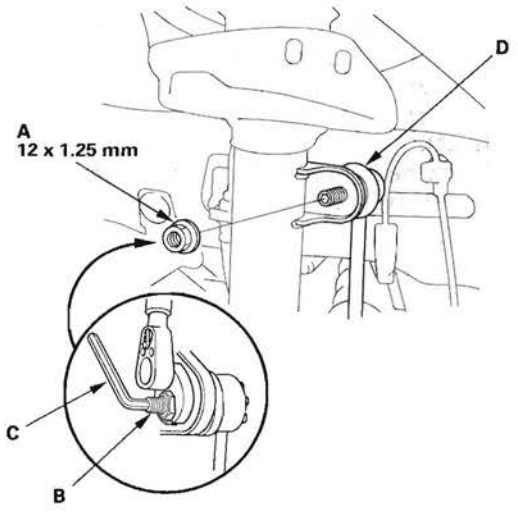

6. Remove the damper pinch bolts (A) and self-locking nuts (B) from the damper.

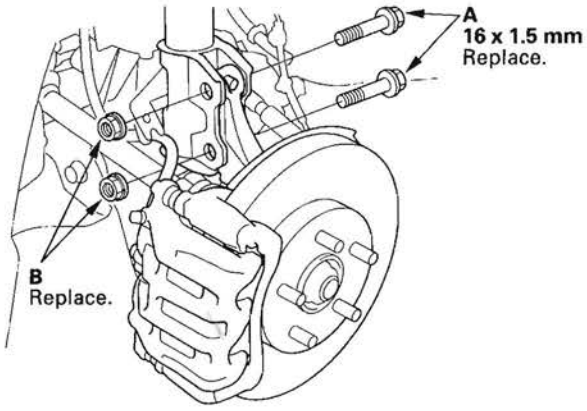

7. Remove the lid (A) by releasing the hooks (B).

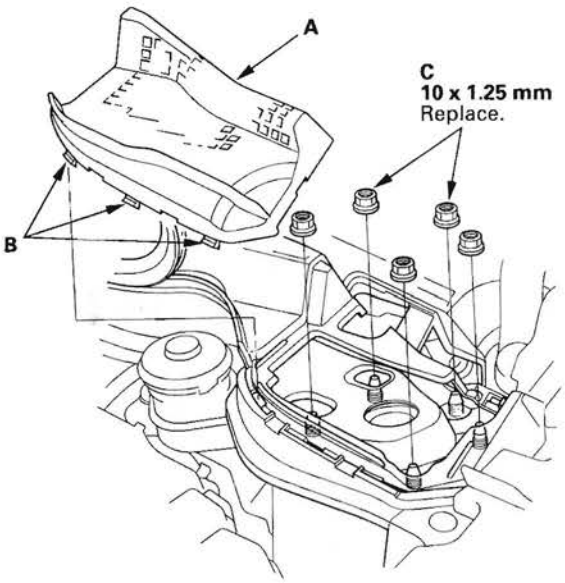

8. Remove the flange nuts (C) from the top of the damper.

9. Remove the damper assembly (A).

NOTE:
- The damper springs are different, left and right. Mark the springs L and R before you continue.
- Be careful not to damage the body.

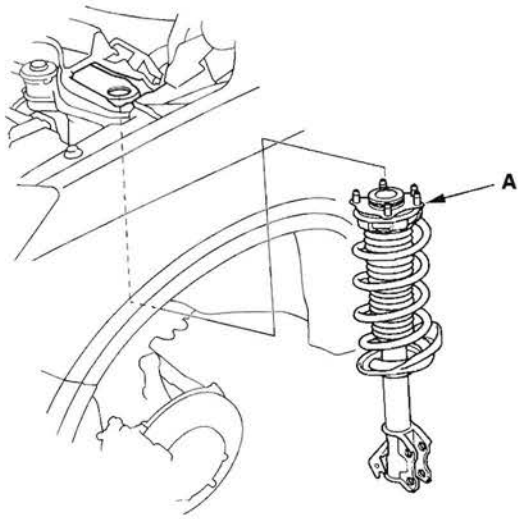

Installation

1. Install the damper assembly (A) on to the frame. Note the direction of the damper mounting base so that the stamp (B) on it is toward the outside of the vehicle.

NOTE: Be careful not to damage the body.

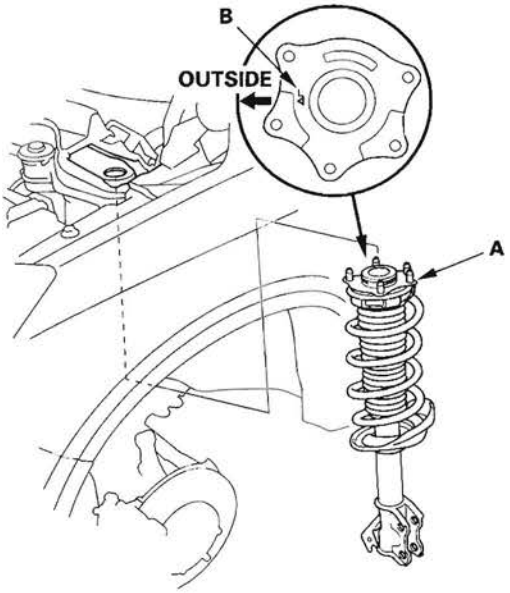

2. Loosely install new flange nuts (A) to the top of the damper.

NOTE: Install the lid (B) by pushing the hooks (C) into place securely after tightening the flange nuts to the specified torque value.

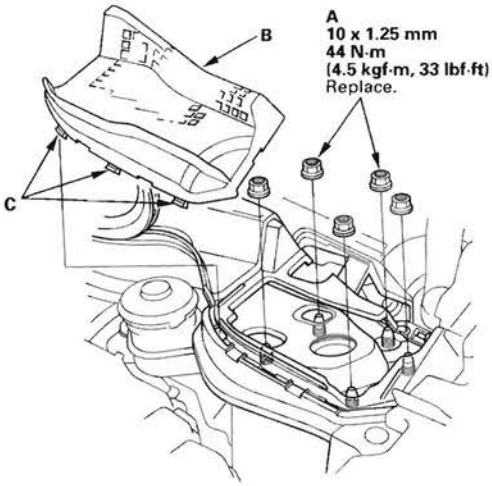

(cont'd)

Damper/Spring Removal and Installation (cont'd)

3. Loosely install new damper pinch bolts (A) and new self-locking nuts (B) to the damper (C).

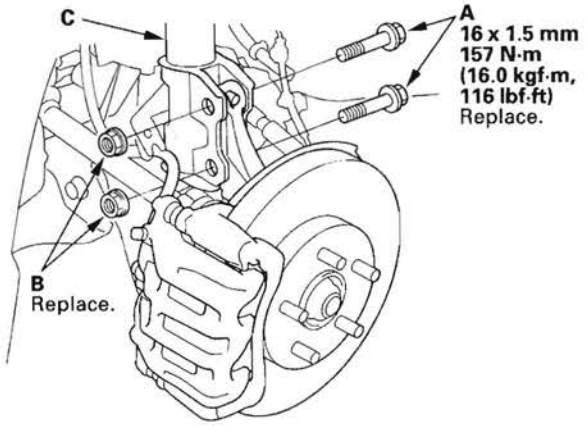

4. Connect the stabilizer link (A) to the damper (B), and loosely install the flange nut (C), while holding the joint pin (D) with the hex wrench (E).

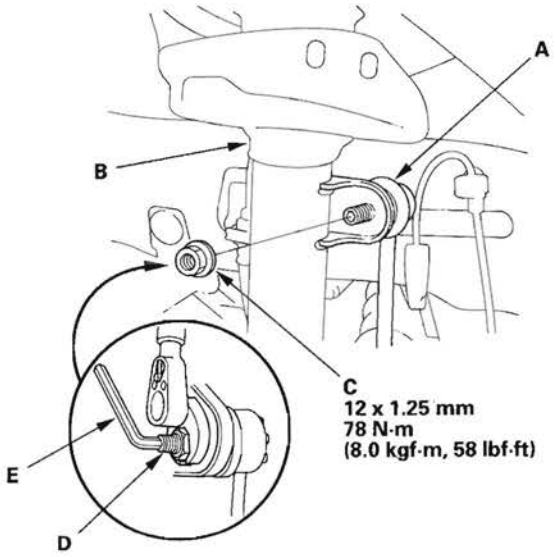

5. Install the wheel sensor harness guide (A), the harness clip (B), and the brake hose (C) to the damper (D).

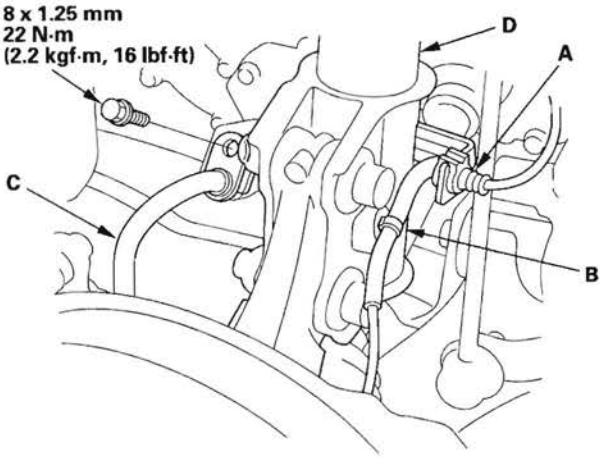

6. Raise the front suspension with a floor jack to load the suspension with the vehicle's weight.
7. Tighten the damper pinch bolts and the self-locking nuts to the specified torque value.
8. Tighten the flange nuts on top of the damper to the specified torque value.
9. Install the lid.
10. Clean the mating surface of the brake disc and the inside of the wheel, then install the rear wheel.
11. Check the wheel alignment, and adjust it if necessary (see page 18-5).

Damper/Spring Disassembly, Inspection, and Reassembly

Exploded View

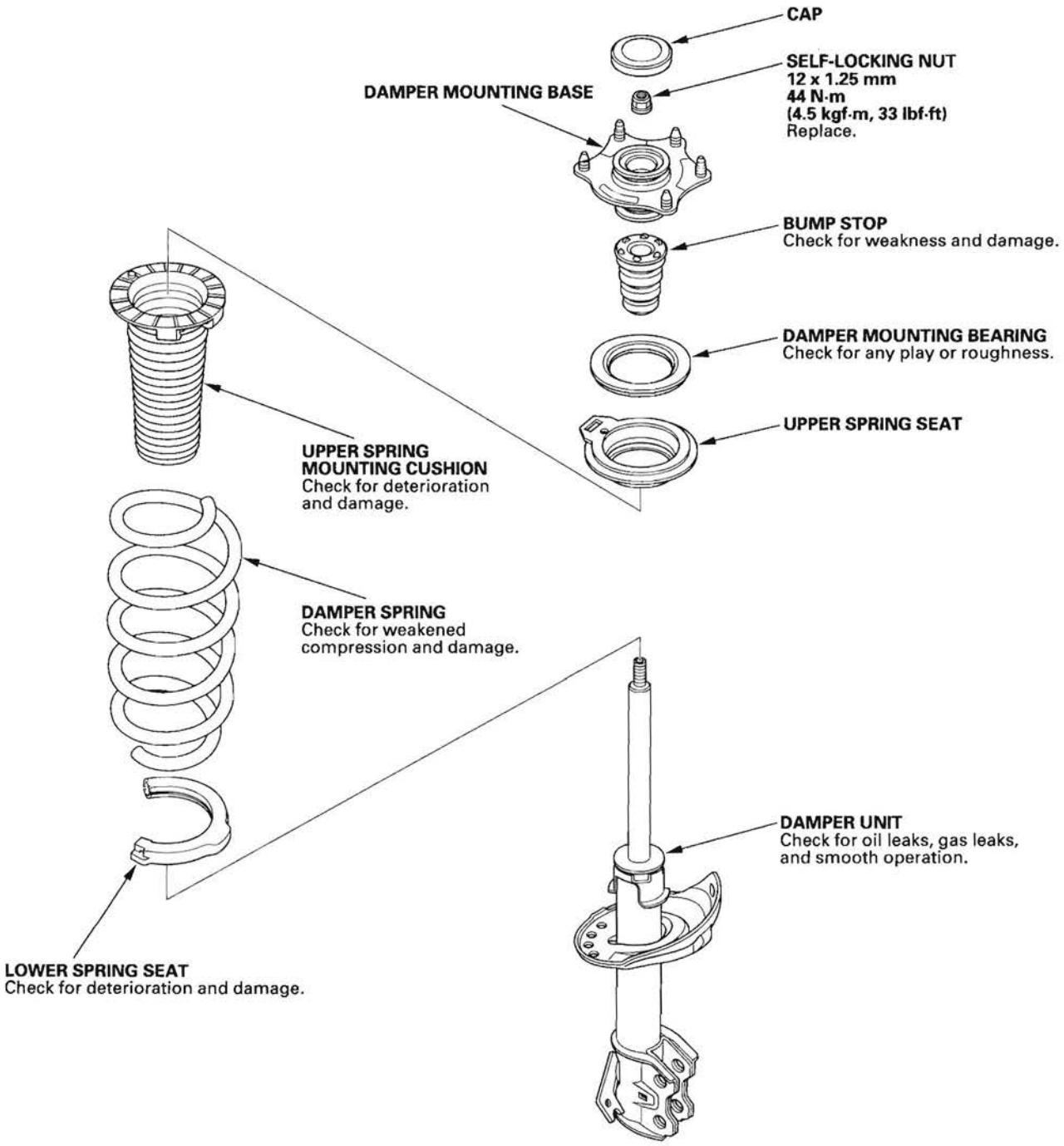

(cont'd)

Damper/Spring Disassembly, Inspection, and Reassembly (cont'd)

Special Tools Required
Strut nut adapter 07AAA-SVAA100

NOTE: When compressing the damper spring, use a commercially available strut spring compressor (Branick MST-580A or Model 7200, or equivalent) according to the manufacturer's instructions.

Disassembly

1. Remove the cap (A) from the top of the damper.

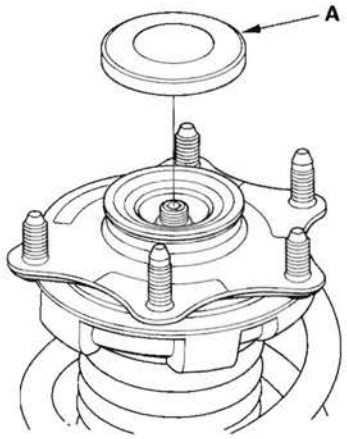

2. Compress the damper spring, then remove the self-locking nut (A) using the strut nut adapter, a ratchet or breaker bar while holding the damper shaft with a hex wrench (B). Do not compress the spring more than necessary to remove the nut.

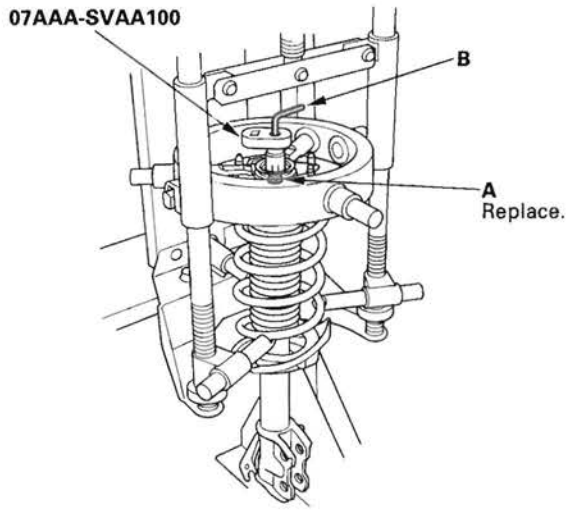

3. Release the pressure from the strut spring compressor, then disassemble the damper as shown in the Exploded View.

Inspection

1. Reassemble all the parts, except for the upper spring mounting cushion, the bump stop, and the damper spring.

2. Compress the damper assembly by hand, and check for smooth operation through a full stroke, both compression and extension. The damper should extend smoothly and constantly when compression is released. If it does not, the gas is leaking and the damper should be replaced.

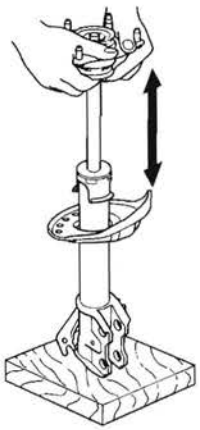

3. Check for oil leaks, abnormal noises, or binding during these tests.

Reassembly

NOTE: Assemble each of the disassembled parts by referring to the Exploded View.

1. Install the upper spring mounting cushion (A) on the upper spring seat (B) by aligning the ledge portion (C).

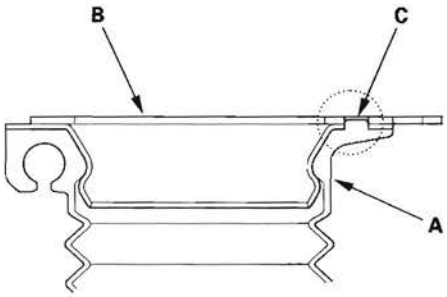

2. Install the damper spring (A) on the upper spring mounting cushion (B), then align the upper end (C) of the damper spring with the cushion stop (D).

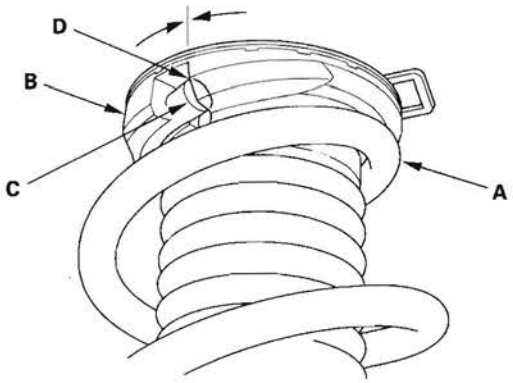

3. Compress the damper spring.

4. Install all the parts except the damper mounting washer and self-locking nut onto the damper unit (A) by referring to the Exploded View.

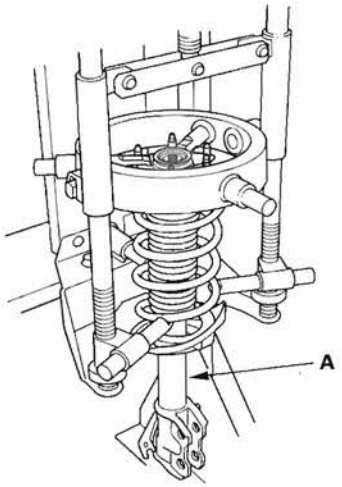

5. Align the bottom of the damper spring (A) with the stepped part (B) of the lower spring seat.

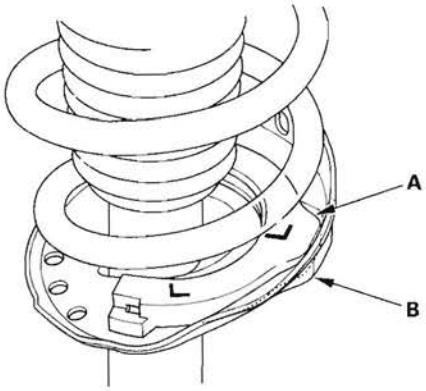

(cont'd)

Damper/Spring Disassembly, Inspection, and Reassembly (cont'd)

6. Align the center of raised portion (A) on the upper spring seat and the damper unit.

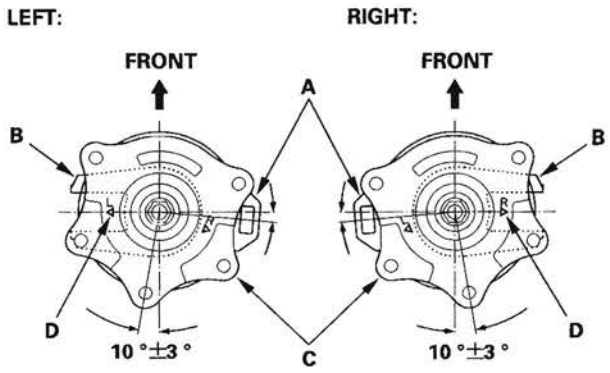

7. Align the damper bracket (B) and the damper mounting base (C) so that "△" stamp (D) on it is toward the outside of the vehicle.

8. Install a new self-locking nut (A).

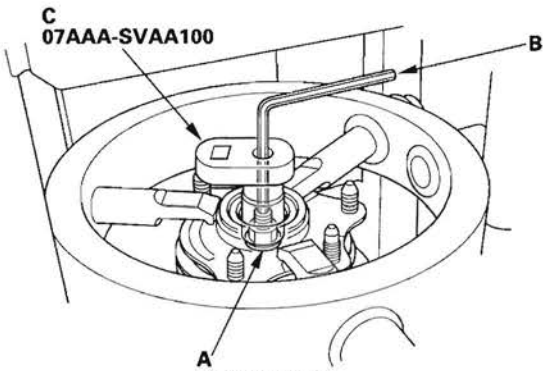

9. Hold the damper shaft using a hex wrench (B), and tighten the new self-locking nut using the strut nut adapter (C) and, a torque wrench to the specified torque value.

Knuckle/Hub Bearing Unit Replacement

Exploded View

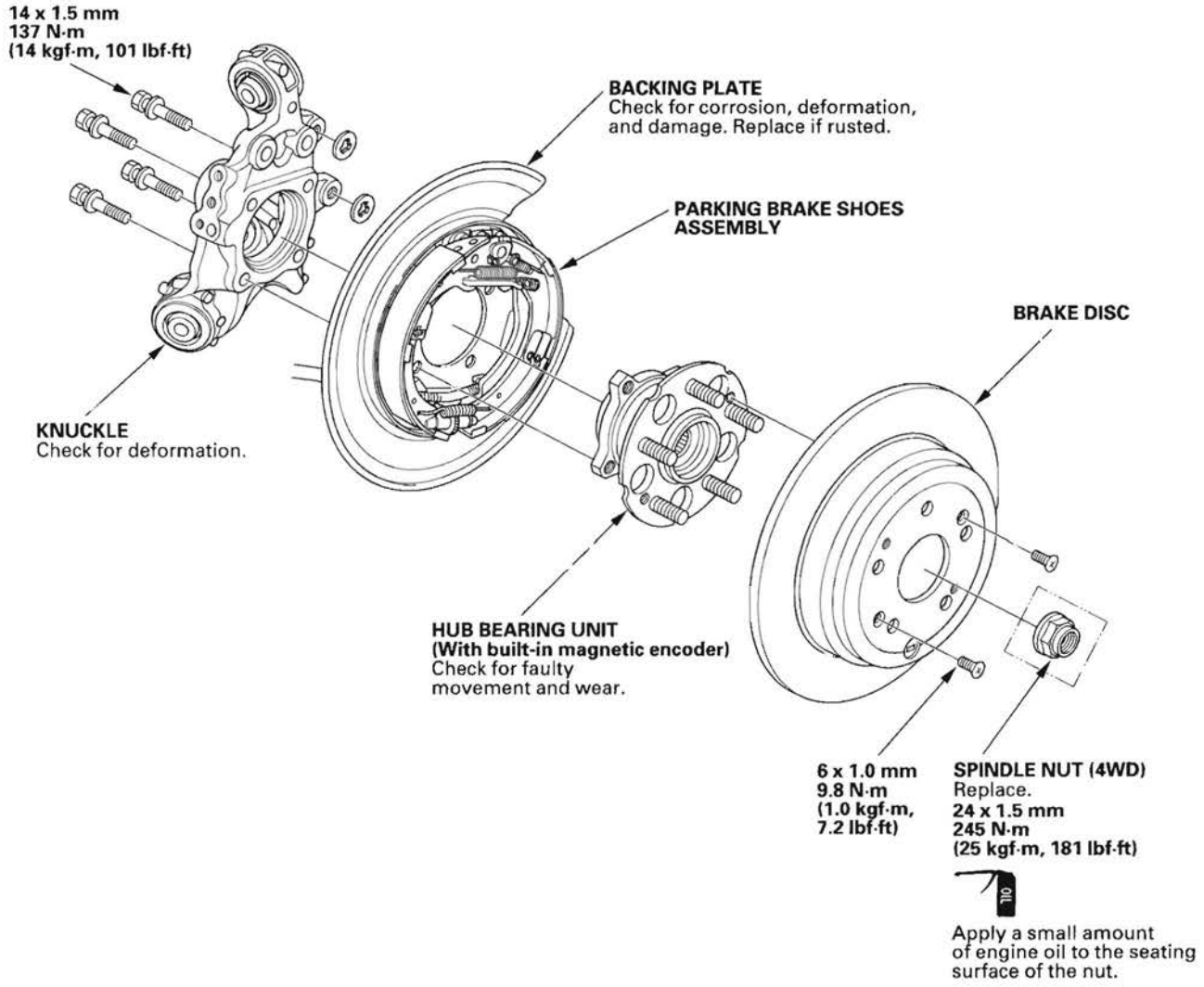

(cont'd)

Knuckle/Hub Bearing Unit Replacement (cont'd)

Hub Bearing Unit Replacement

1. Raise the rear of the vehicle, and support it with safety stands in the proper locations (see page 1-7).
2. Remove the wheel nuts (A) and the rear wheel.

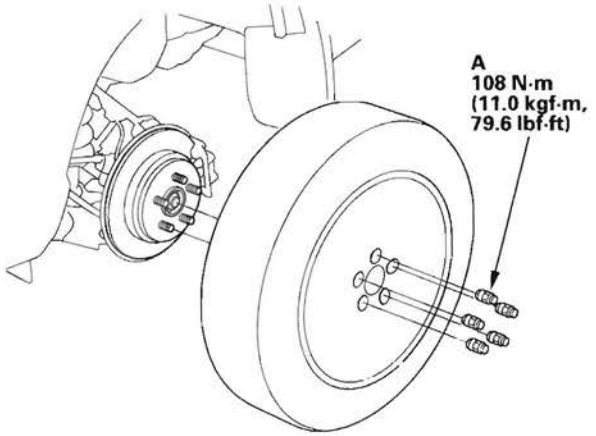

3. Remove the brake hose bracket mounting bolt (A) from the knuckle.

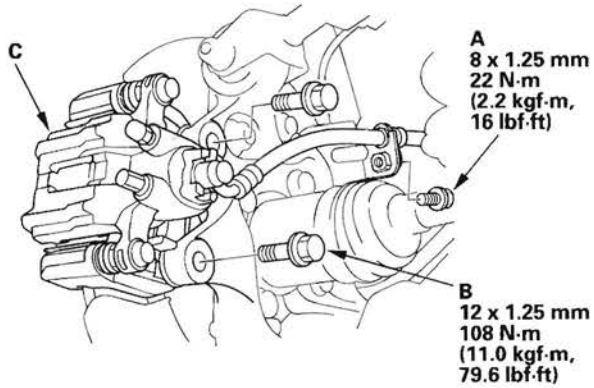

4. Remove the brake caliper bracket mounting bolts (B), and remove the caliper assembly (C) from the knuckle. To prevent damage to the caliper assembly or brake hose, use a short piece of wire to hang the caliper assembly from the undercarriage. Do not twist the brake hose excessively.
5. Remove the two washers (A).

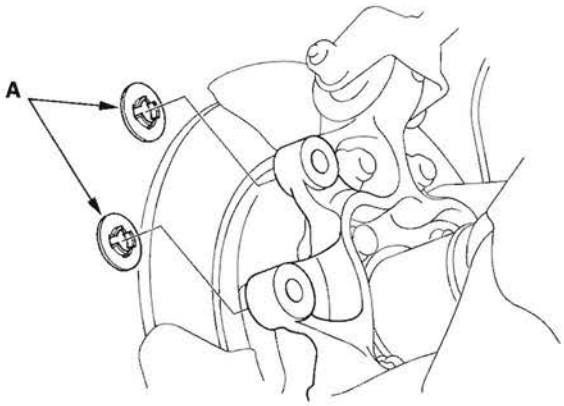

6. Raise the stake (A), then remove the spindle nut (B). (4WD only)

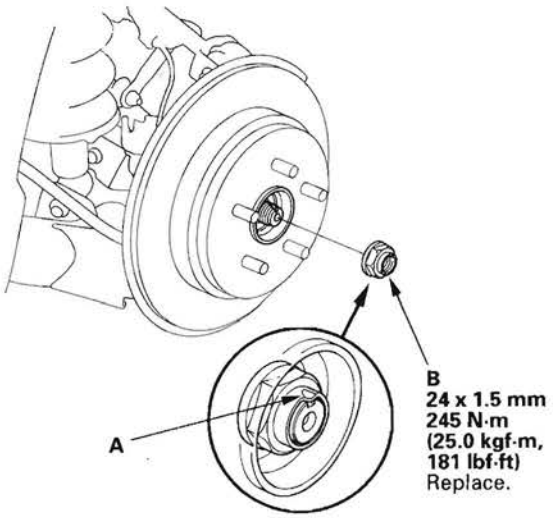

7. Release the parking brake, and remove the brake disc/drum (A) from the hub bearing unit.

NOTE:
- Remove the adjuster plug (B), then, if necessary, turn the adjuster bolt (C) with a flat-tip screwdriver until the shoes become loose.
- If the brake drum is stuck to the hub bearing unit, screw two 8 x 1.25 mm bolts (D) into the brake drum to push it away from the hub bearing unit. Turn each bolt 90 degrees at a time to prevent cocking the brake drum.

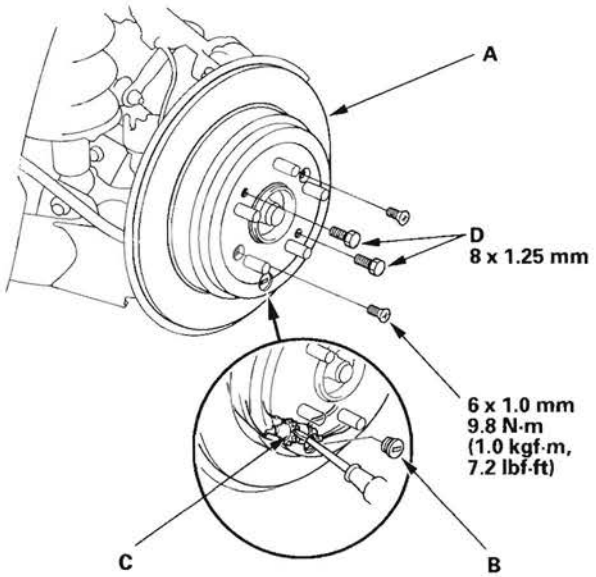

8. Remove the hub bearing unit (A) from the spindle.

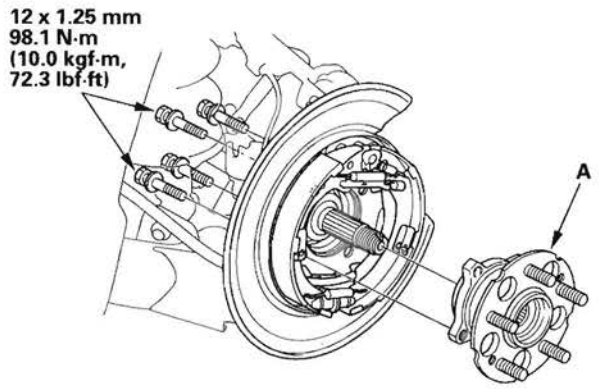

9. Check the hub bearing unit for damage and cracks.

10. Install the hub bearing unit in the reverse order of removal, and note these items:

- Tighten all mounting hardware to the specified torque values.
- Use a new spindle nut during reassembly.
- Before installing the spindle nut, apply a small amount of engine oil to the seating surface of the nut. After tightening, use a drift to stake the spindle nut shoulder against the driveshaft.
- Before installing the brake disc/drum, clean the mating surface of the hub bearing unit and the inside of the brake disc/drum.
- Before installing the wheel, clean the mating surface of the brake disc/drum and the inside of the wheel.
- After installation, press the brake pedal several times to make sure the brakes work.
- Check the wheel alignment, and adjust it if necessary (see page 18-5).

(cont'd)

Knuckle/Hub Bearing Unit Replacement (cont'd)

Knuckle Replacement

1. Remove the hub bearing unit.

2. Remove the parking brake assembly (A).

   NOTE: To prevent damage to the backing plate or parking brake shoes assembly and cable, use a short piece of wire to hang the backing plate from the undercarriage. Do not twist the parking brake cable excessively.

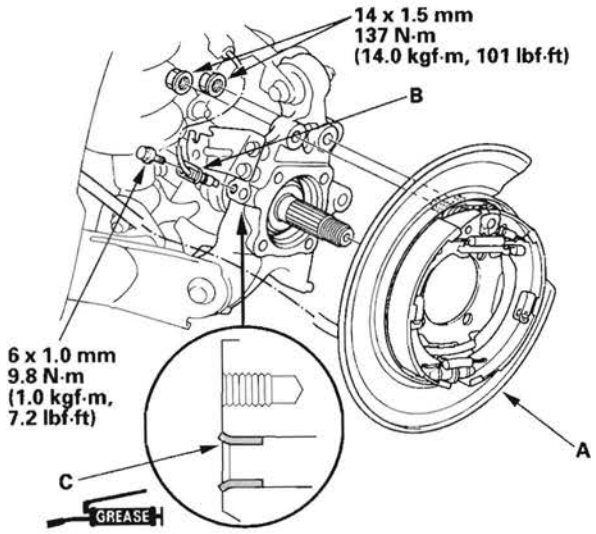

3. Remove the wheel sensor (B). Do not disconnect the wheel sensor connector.

   NOTE: During installation, apply multipurpose grease inside of the hole (C) on the knuckle.

4. Place the floor jack under the trailing arm (A), and support the suspension.

   NOTE: Do not place the jack against the plate section of the trailing arm.

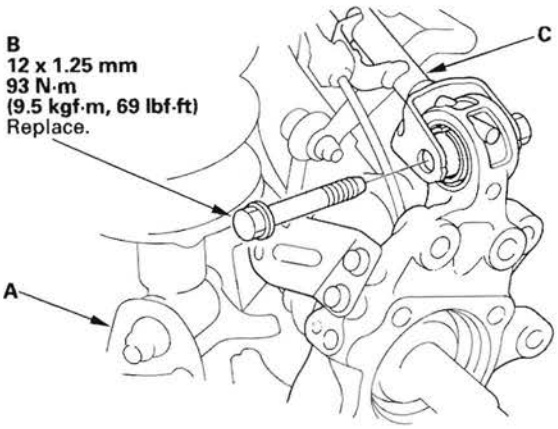

5. Remove the flange bolt (B), and disconnect the upper arm (C) from the knuckle.

   NOTE: During installation, install a new flange bolt.

6. Mark the cam positions of the adjusting bolt (A) and adjusting cam (B), then remove the self-locking nut (C), adjusting cam, and adjusting bolt. Discard the self-locking nut.

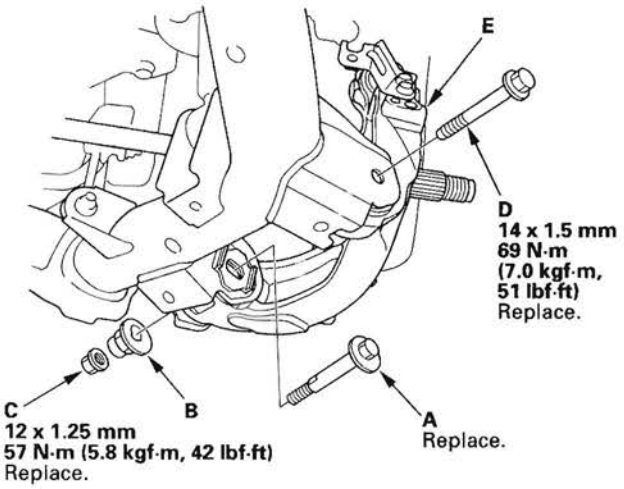

7. Remove the flange bolt (D), and remove the knuckle (E).

   NOTE: During installation, install a new flange bolt.

8. Remove the brake hose mounting bracket (A).

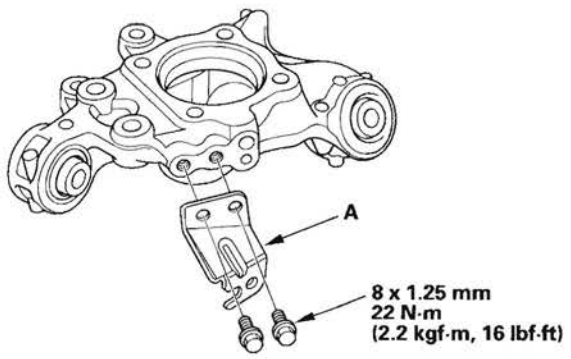

9. Install the knuckle in the reverse order of removal, and note these items:

   - First install all the suspension components, and lightly tighten bolts and nuts, then place a floor jack under the trailing arm, and raise the suspension to load it with the vehicle's weight before fully tightening bolts and nuts to the specified torque values.
   - Tighten all the mounting hardware to the specified torque values.
   - Align the cam positions of the adjusting bolt and adjusting cam with the marked positions when tightening.
   - Use a new self-locking nut during reassembly.
   - Use a new spindle nut during reassembly.
   - After tightening the spindle nut, use a drift to stake the spindle nut shoulder against the spindle.
   - Before installing the brake disc/drum, clean the mating surface of the hub bearing unit and the inside of the brake disc/drum.
   - Before installing the wheel, clean the mating surface of the brake disc/drum and the inside of the wheel.
   - Check the wheel alignment, and adjust it if necessary (see page 18-5).

Upper Arm Replacement

1. Raise the rear of the vehicle, and support it with safety stands in the proper locations (see page 1-7).
2. Remove the rear wheel.
3. Place a floor jack under the trailing arm, and support the suspension.
4. Remove the wheel sensor harness bracket (A) from the upper arm (B).

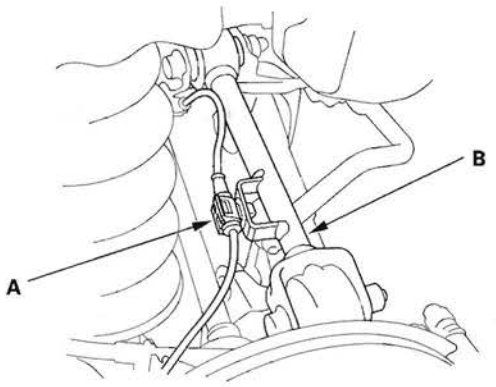

5. Remove the flange bolts (A), and remove the upper arm (B).

   NOTE: During installation, install new flange bolts.

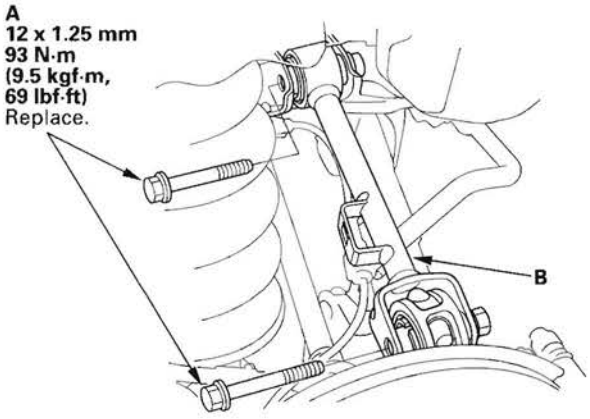

6. Install the upper arm in the reverse order of removal, and note these items:

   - First install all the suspension components and lightly tighten the bolts and nuts, then place a jack under the trailing arm, and raise the suspension to load it with the vehicle's weight before fully tightening the bolts and nuts to the specified torque values.
   - Tighten all the mounting hardware to the specified torque values.
   - Before installing the wheel, clean the mating surface of the brake disc/drum and the inside of the wheel.
   - Check the wheel alignment, and adjust it if necessary (see page 18-5).

Trailing Arm Replacement

1. Raise the rear of the vehicle, and support it with safety stands in the proper locations (see page 1-7).

2. Remove the rear wheel.

3. Remove the knuckle (see page 18-34).

4. Place the floor jack under the trailing arm (A) to support it.

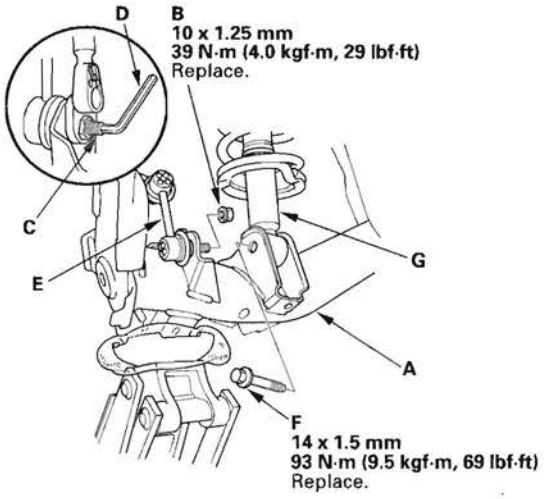

5. Remove the flange nut (B), while holding the joint pin (C) with a hex wrench (D), and disconnect the stabilizer link (E) from the trailing arm.

   NOTE: During installation, install a new flange nut.

6. Remove the flange bolt (F), and disconnect the damper (G) from the trailing arm.

7. Remove the trailing arm front mounting bolts (A).

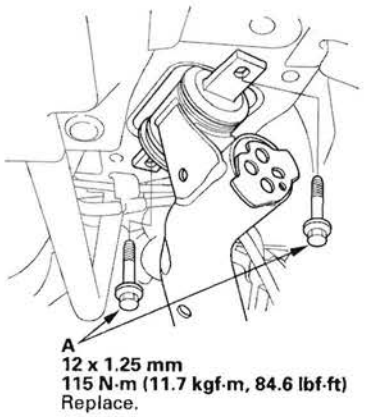

8. Remove the trailing arm rear mounting bolt (A).

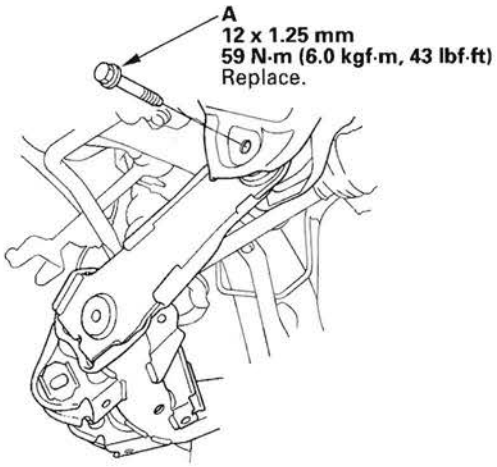

9. Lower the jack, and remove the trailing arm.

10. Install the trailing arm in the reverse order of removal, and note these items:

    - First install all the suspension components and lightly tighten the bolts and nuts, then place a jack under the trailing arm, and raise the suspension to load it with the vehicle's weight before fully tightening the bolts and nuts to the specified torque values.
    - Use new flange bolts during reassembly.
    - Tighten all the mounting hardware to the specified torque values.
    - Before installing the wheel, clean the mating surface of the brake disc/drum and the inside of the wheel.
    - Check the wheel alignment, and adjust it if necessary (see page 18-5).

Stabilizer Link Removal/Installation

1. Raise the rear of the vehicle, and support it with safety stands in the proper locations (see page 1-7).
2. Remove the rear wheel.
3. Remove the self-locking nut (A) and the flange nut (B) while holding the respective joint pin (C) with a hex wrench (D), then remove the stabilizer link (E).

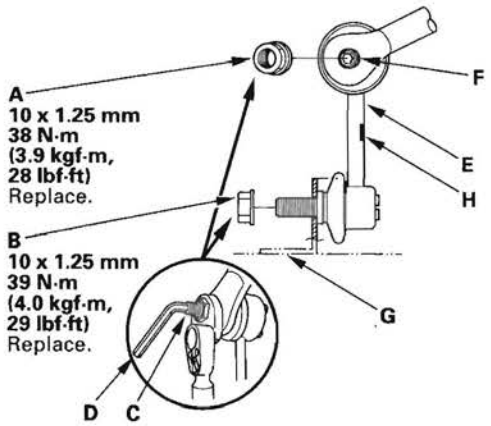

4. Install the stabilizer link on the stabilizer bar (F) and trailing arm (G) with the joint pins set at the center of their range of movement.

   NOTE: The left stabilizer link has a yellow paint mark (H), while the right stabilizer link has a white paint mark.

5. Install a new self-locking nut and a new flange nut, and lightly tighten them.
6. Place the floor jack under the trailing arm, and raise the suspension to load it with the vehicle's weight.
7. Tighten the self-locking nut and the flange nut to the specified torque values while holding the respective joint pin with a hex wrench.
8. Clean the mating surface of the brake disc/drum and the inside of the wheel, then install the rear wheel.
9. Test-drive the vehicle.
10. After 5 minutes of driving, tighten the self-locking nut again to the specified torque value.

Stabilizer Bar Replacement

1. Raise the rear of the vehicle, and support it with safety stands in the proper locations (see page 1-7).
2. Remove the rear wheels.
3. Disconnect both stabilizer links from the stabilizer bar (see page 18-37).
4. Remove the flange bolts (A) and the bushing holders (B), then remove the bushings (C) and the stabilizer bar (D).

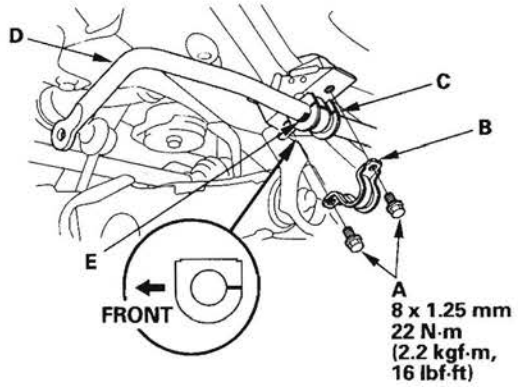

5. Install the stabilizer bar in the reverse order of removal, and note these items:

   - Note the right and left direction of the stabilizer bar.
   - Align the paint marks (E) on the stabilizer bar with the sides of the bushings.
   - Note the fore/aft direction of the bushing.
   - Refer to the stabilizer link removal/installation to connect the stabilizer bar to the links (see page 18-37).
   - Clean the mating surface of the brake disc/drum and the inside of the wheel, then install the rear wheel.
   - Check the wheel alignment, and adjust it if necessary (see page 18-5).

Damper/Spring Removal and Installation

Removal

1. Raise the rear of the vehicle, and support it with safety stands in the proper locations (see page 1-7).
2. Remove the rear wheel.
3. Remove the lid (A) on the cargo area side trim panel by releasing the hooks (B).

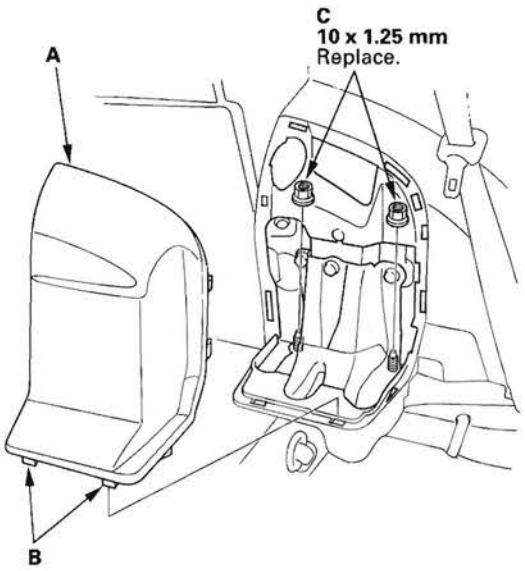

4. Remove the flange nuts (C) from the top of damper.
5. Remove the flange bolts (A), then remove the brake hose bracket (B).

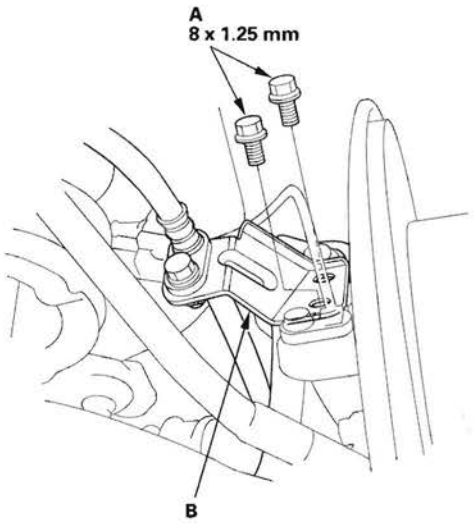

6. Position a floor jack under the trailing arm (A). Raise the floor jack until the suspension begins to compress.

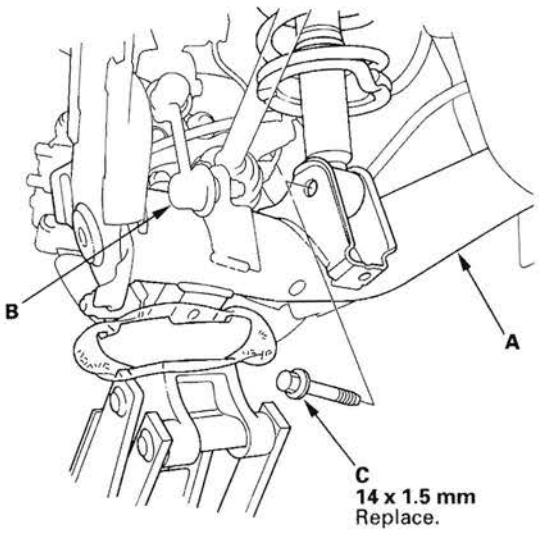

7. Disconnect the stabilizer link (B) from the trailing arm (see page 18-38).
8. Remove the flange bolt (C) from the bottom of the damper.
9. Remove the flange bolt (A), then remove the parking brake cable (B).

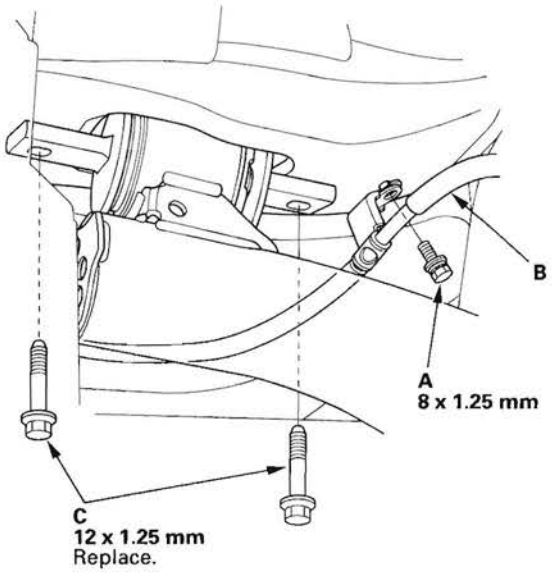

10. Remove the trailing arm mounting bolts (C).

(cont'd)

Damper/Spring Removal and Installation (cont'd)

11. Lower the rear suspension, then remove the damper assembly (A) from the vehicle.

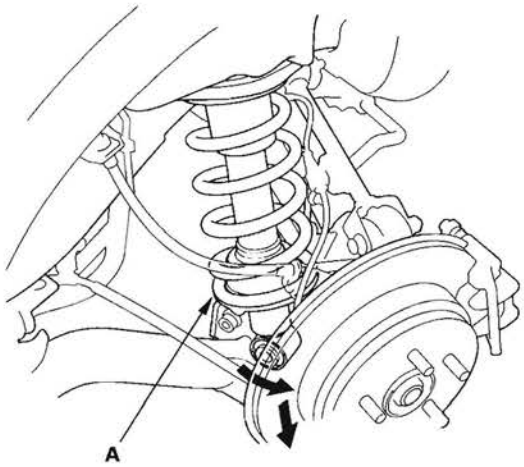

Installation

1. Position the damper assembly (A) between the body and the trailing arm. Note the direction of the damper mounting base so that the hook or the paint mark (B) on it is toward the outside of the vehicle.

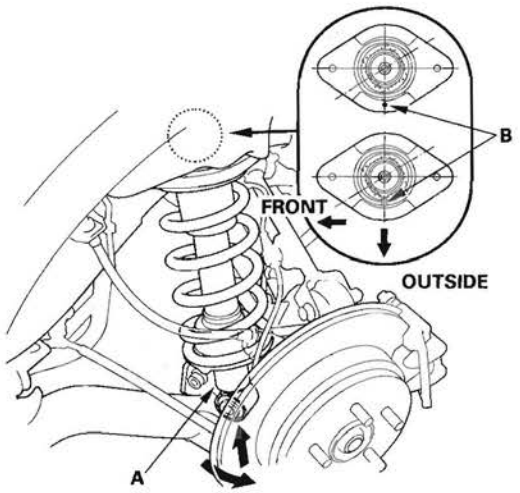

2. Loosely install new flange nuts (A) to the top of the damper.

   NOTE: Install the lid (B) by pushing the hooks (C) into place securely after tightening the flange nuts to the specified torque value.

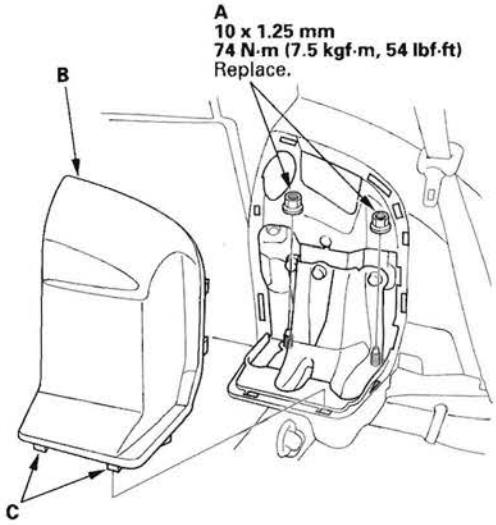

3. Loosely install new trailing arm mounting bolts (A).

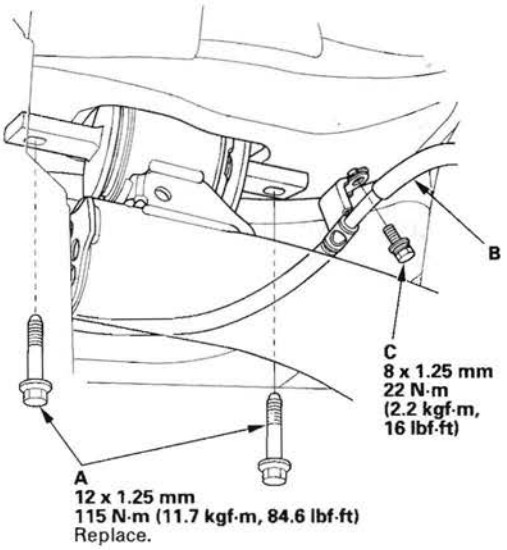

4. Install the parking brake cable (B), then install the flange bolt (C).

5. Position a floor jack under the trailing arm (A). Raise the floor jack until the hole in the trailing arm aligns with the hole in the damper.

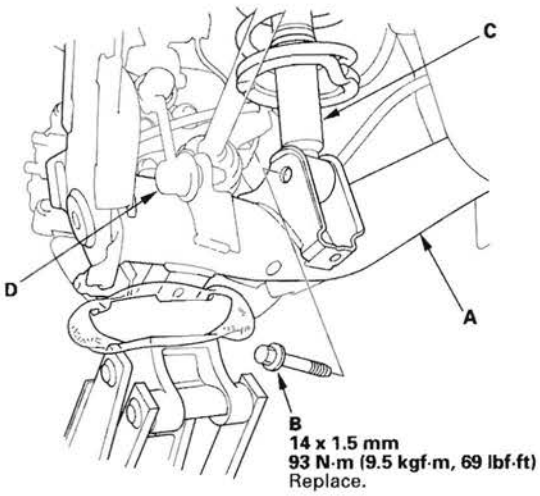

6. Loosely install a new flange bolt (B) on the bottom of the damper (C).

7. Connect the stabilizer link (D) to the trailing arm (see page 18-38).

8. Raise the rear suspension with a floor jack to load the suspension with the vehicle's weight.

9. Tighten the flange nuts and the flange bolts to the specified torque values.

10. Install the brake hose bracket (A), then install the flange bolts (B).

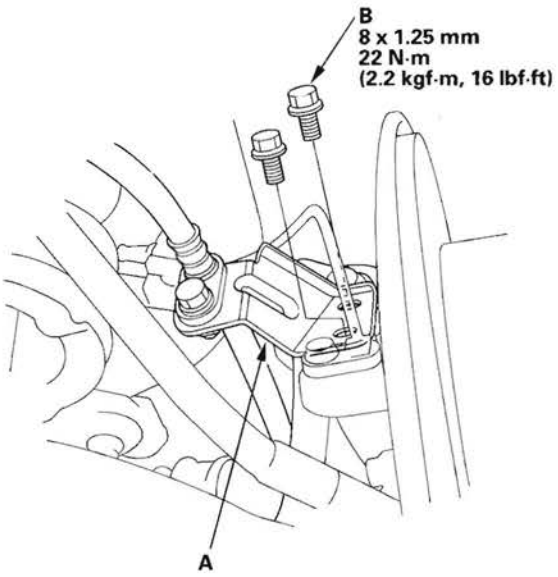

11. Install the lid.

12. Clean the mating surface of the brake disc/drum and the inside of the wheel, then install the rear wheel.

13. Check the wheel alignment, and adjust it if necessary (see page 18-5).

Damper/Spring Disassembly, Inspection, and Reassembly

Exploded View

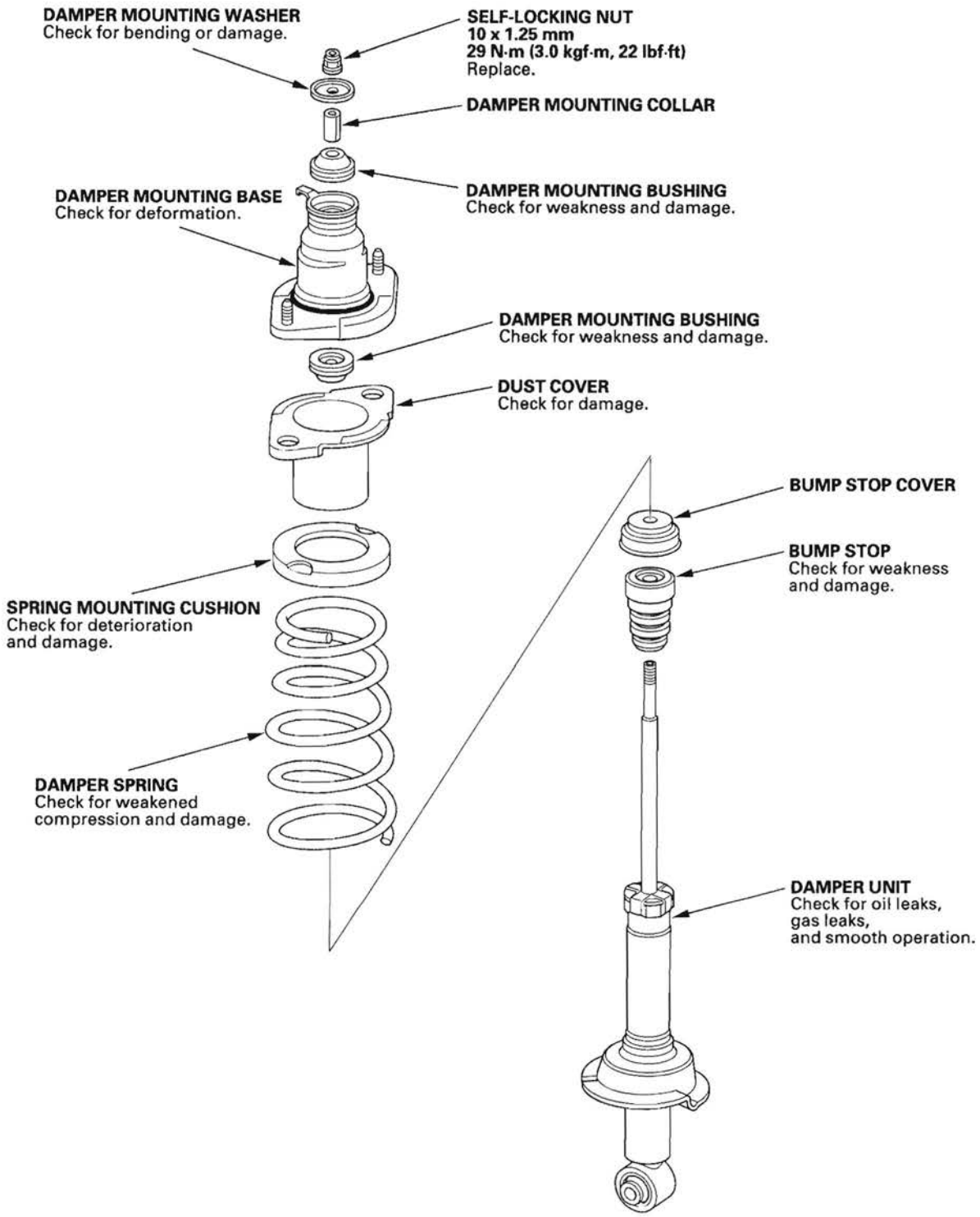

Disassembly

1. Compress the damper spring, then remove the 10 mm nut (A) while holding the damper shaft with a hex wrench (B). Do not compress the damper spring more than necessary to remove the nut.

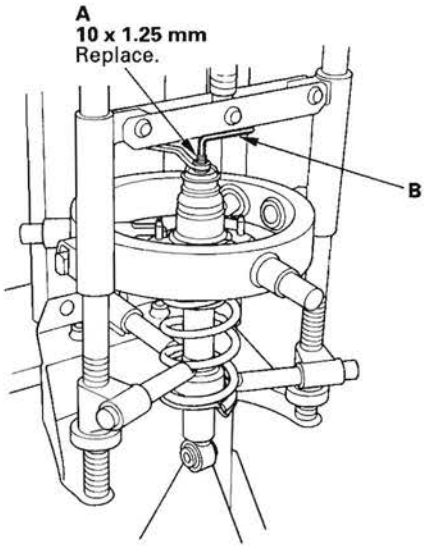

2. Release the pressure from the strut spring compressor, then disassemble the damper as shown in the Exploded View.

Inspection

1. Reassemble all the parts, except the upper spring mounting cushion, the bump stop, and the damper spring.

2. Compress the damper assembly by hand, and check for smooth operation through a full stroke, both compression and extension. The damper should extend smoothly and constantly when compression is released. If it does not, the gas is leaking and the damper should be replaced.

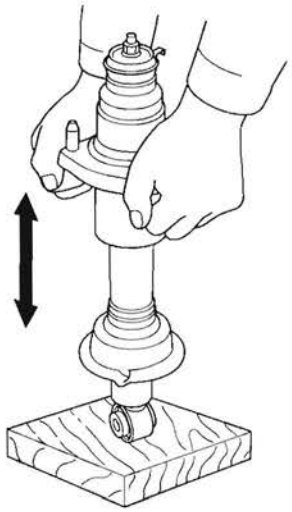

3. Check for oil leaks, abnormal noises, and binding during these tests.

(cont'd)

Damper/Spring Disassembly, Inspection, and Reassembly (cont'd)

Reassembly

NOTE: Assemble each of the disassembled parts by referring to the Exploded View.

1. Compress the damper spring with the spring compressor.
2. Install all the parts except the damper mounting washer and self-locking nut onto the damper unit (A) by referring to the Exploded View.

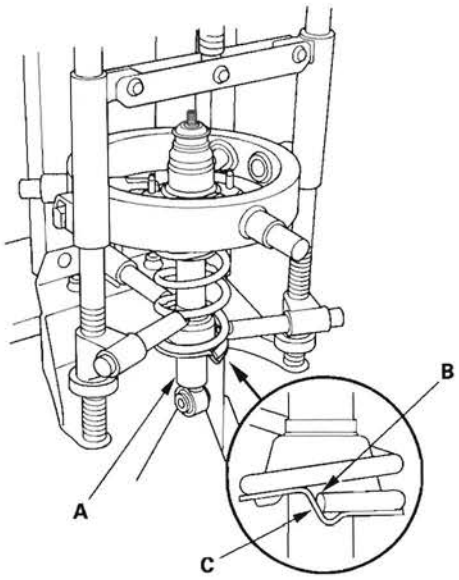

3. Align the bottom of the damper spring (B) with the stepped part (C) of the lower spring seat.
4. Align the bottom (A) of the damper and the damper mounting base (B) as shown so that the hook or the paint mark (C) on it is toward the outside of the vehicle.

Left side:

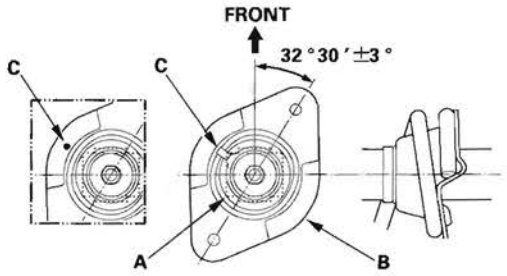

Right side:

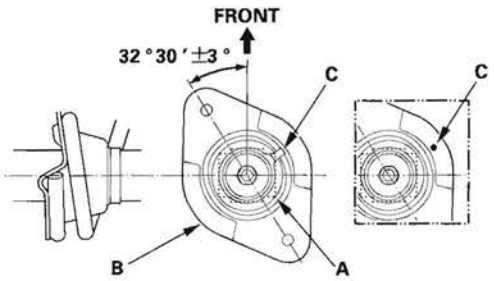

5. Install the damper mounting washer (A) and a new self-locking nut (B).

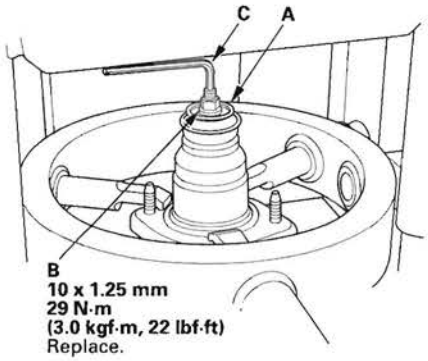

6. Hold the damper shaft using a hex wrench (C), and tighten new self-locking nut to the specified torque value.

Suspension

Front and Rear Suspension **18-2**

Front Suspension **18-12**

Rear Suspension **18-31**

TPMS (Tire Pressure Monitoring System)

Component Location Index 18-46
General Troubleshooting Information 18-47
Memorizing the Tire Pressure Sensor ID 18-50
Tire Pressure Sensor Location 18-51
DTC Troubleshooting Index 18-53
Symptom Troubleshooting Index 18-54
System Description 18-55
Circuit Diagram 18-59
DTC Troubleshooting 18-61
Symptom Troubleshooting 18-71
TPMS Control Unit Replacement 18-75
Tire Pressure Sensor Replacement 18-76



Component Location Index

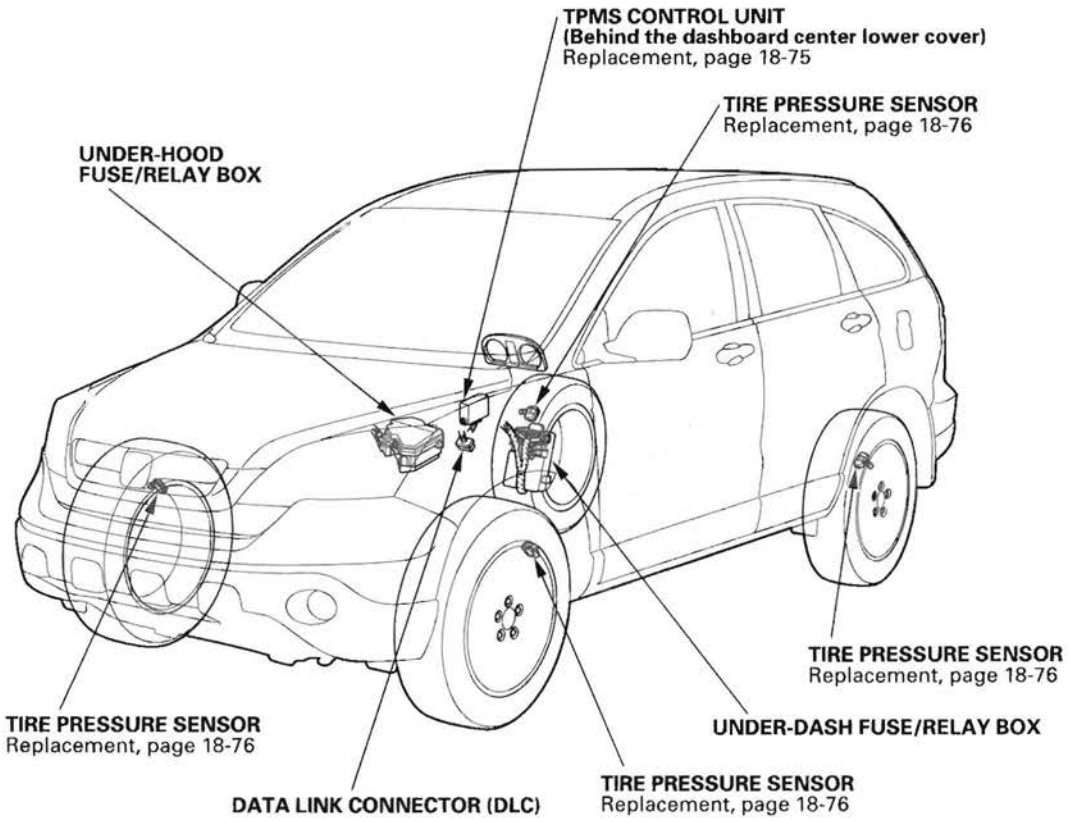

General Troubleshooting Information

System Indicator Locations

The system has two indicators.

- The low pressure indicator (A)
- The TPMS indicator (B)

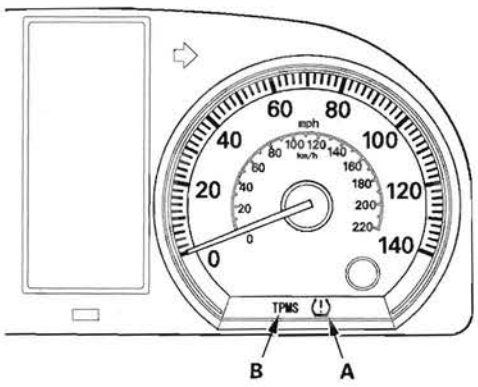

How TPMS Works

The TPMS (tire pressure monitoring system) has a low pressure indicator, and a TPMS indicator. When the TPMS control unit detects low pressure in a tire, or a problem in the system, it turns on the appropriate indicator.

- If low tire pressure is detected in one or more tires, the low pressure indicator comes on.
- If a problem in the system is detected, the TPMS indicator comes on.
- If low tire pressure and a problem in the system are detected, only the TPMS indicator comes on.

If the system is OK, the TPMS indicator and the low pressure indicator should come on when you turn the ignition switch ON (II), and then go off 2 seconds later. If they don't, there is a problem with the system.

If the system detects low pressure in any of the four tires, the low pressure indicator comes on, and the control unit will sets one or more of these codes: DTC 11, 13, 15, 17. When the tire pressure returns to normal, the control unit turns off the indicators and stores the DTC(s). However, if the control unit detects a problem in the system during an indication of low tire pressure, it turns off the low pressure indicator, stores the DTC(s), and turns on the TPMS indicator(s).

NOTE: Tire pressure increases slightly as the temperature in the tires rises during driving at highway speeds. Pressure also increases or decreases slightly with changes in outside air temperature. A temperature change of about 18 °F (10 °C) changes tire pressure by about 10 kPa (0.1 kgf/cm^2, 1.5 psi). If the temperature drops, tire pressure could decrease just enough to turn on the low pressure indicator, but later, the tire temperature could increase enough to turn the indicator off. To resolve a complaint of such intermittent indications, confirm and clear the stored DTC(s) and check the tire pressures. Then explain to the customer how temperature changes can affect the system, especially when tire pressures are near the low end of the TPMS normal range - 168 to 220 kPa (1.7 to 2.2 kgf/cm^2, 24 to 32 psi).

If a problem is detected in the system, the TPMS indicator comes on and stays on until the system returns to normal with most DTCs. If DTC 81, 83, or 85 is set, the TPMS indicator goes off only when the ignition switch is turned off.

When a flat tire is replaced with the spare tire, the TPMS indicator comes on (DTC 32, 34, 36, or 38) because the system is no longer receiving the signal from the flat tire's transmitter.
This is not a problem with the spare tire.

(cont'd)

General Troubleshooting Information (cont'd)

Problems That Are Not System Faults

- Tire Sealant
  Fluid sealant used to repair a punctured tire can damage the tire pressure sensor mounted in each wheel. It can prevent the system from detecting the correct tire pressure, which sets a DTC 11, 13, 15, or 17 even though the system is normal.
- Cold Weather
  When the weather is extremely cold - about −40 °F (−40 °C) or colder - the output of the lithium battery in each tire pressure sensor may drop far enough that the control unit sets a DTC for low battery voltage (31, 33, 35, or 37) even though the system is normal.
- Non-TPMS Wheels
  Vehicles equipped with TPMS must use wheels made for the system. Every TPMS wheel has an exclusive mark; do not use any other type of wheel.

How a Diagnostic Trouble Code (DTC) is Set

- When the system detects a problem, the TPMS control unit sets a code, but shifts to fail-safe mode, and will not alert the driver to low tire pressures.
- If the TPMS control unit loses power, or fails, the TPMS indicator comes on, but no DTC are set.
- The memory can hold all the DTCs that could possibly be set. However, when the same DTC is detected more than once, the most recent one overwrites the previous one, so only the latest DTC of each type is stored.
- DTCs are indicated in ascending order, not in the order they occurred.
- Set DTCs are stored in the EEPROM (nonvolatile memory), they cannot be cleared by disconnecting the battery. To clear a DTC, connect the HDS (Honda Diagnostic System) to the data link connector (DLC), and follow the screen prompts.

How to Troubleshoot DTCs

DTC troubleshooting procedures assume the cause of the problem is still present and the TPMS indicator is still on. (NOTE: The TPMS indicator comes on for DTCs 11, 13, 15, and 17 only if the low tire pressure indication is false, caused by a problem in the system.) Do not use a troubleshooting procedure unless the system has set the DTC listed for it.

1. Ask the customer to describe the conditions when the indicator came on, and try to reproduce the same conditions for troubleshooting. Find out if the customer checked and/or adjusted tire pressures since the indicator came on.

2. If an indicator does not come on during the test-drive, check for loose terminals, poor contact due to damaged terminals, etc. before you start troubleshooting.

3. After troubleshooting, repair and clear the DTCs, and test-drive the vehicle. Make sure no indicators come on.

4. Check for DTCs in other control units that are connected via F-CAN. If there are DTCs that are related to F-CAN, the most likely cause was that the ignition switch was turned ON (II) with the TPMS control unit connector disconnected. Clear the DTCs. Check for PGM-FI and TPMS codes, and troubleshoot those first.

How to Retrieve DTCs

1. With the ignition switch OFF, connect the HDS (Honda Diagnostic System) to the data link connector (DLC) (A) located under the driver's side of the dashboard.

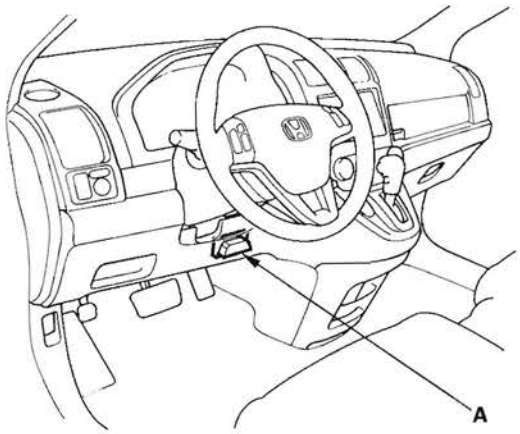

2. Turn the ignition switch ON (II).
3. Make sure the HDS communicates with the vehicle and the TPMS control unit. If it doesn't, troubleshoot the DLC circuit (see page 11-197).
4. Follow the prompts on the HDS to display the DTC(s) on the screen. After determining the DTC, refer to the DTC troubleshooting.

   NOTE: See the HDS Help menu for specific instructions.

5. Turn the ignition switch OFF.

How to Clear DTCs

1. With the ignition switch OFF, connect the HDS to the data link connector (DLC) (A) located under the driver's side of the dashboard.

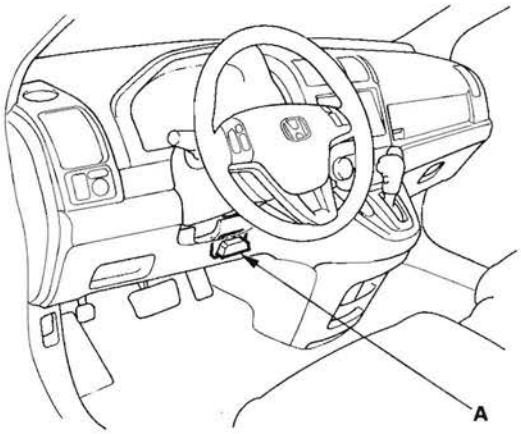

2. Turn the ignition switch ON (II).
3. Make sure the HDS communicates with the vehicle and the TPMS control unit. If it doesn't, troubleshoot the DLC circuit (see page 11-197).
4. Clear the DTC(s) by following the screen prompts on the HDS.

   NOTE: See the HDS Help menu for specific instructions.

5. Turn the ignition switch OFF.

Memorizing the Tire Pressure Sensor ID

Special Tools Required
TPMS sensor initializer tool AKS0620006
Available through the American Honda Tool and Equipment program, 888-424-6857.

All four tire pressure sensor IDs must be memorized to the TPMS control unit whenever you do any of these actions:

- Replace the TPMS control unit.
- Replace the tire pressure sensor.
- Substitute a known-good wheel with tire pressure sensor.

NOTE:
- To ensure the control unit memorizes the correct ID, the vehicle with the new sensor must be at least 10 ft (3 m) away from other vehicle have the tire pressure sensors.
- When doing a tire rotation, memorizing the sensors is not needed.

1. With the ignition switch OFF, connect the HDS to the data link connector (DLC) (A) located under the driver's side of the dashboard.

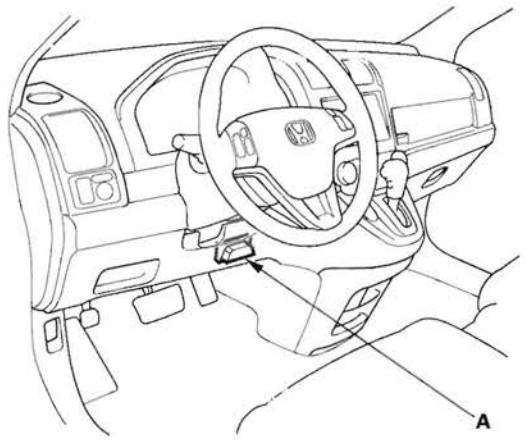

2. Turn the ignition switch ON (II).

3. Make sure the HDS communicates with the vehicle and the TPMS control unit. If it doesn't, troubleshoot the DLC circuit (see page 11-197).

4. Hold the TPMS sensor initializer tool near one wheel, and memorize the pressure sensor ID by following the screen prompts on the HDS.

   NOTE:
   - If Not defined is shown on the HDS, turn the TPMS sensor initializer tool OFF, rotate the tire 1/4 turn, then turn the TPMS sensor initializer tool ON, and try again. If Not defined is still shown, repeat the procedure in the previous sentence until a response is shown.
   - If you turn the ignition switch OFF before memorize all four sensor IDs, the memorizing ID is canceled.
   - See the HDS Help menu for specific instructions.

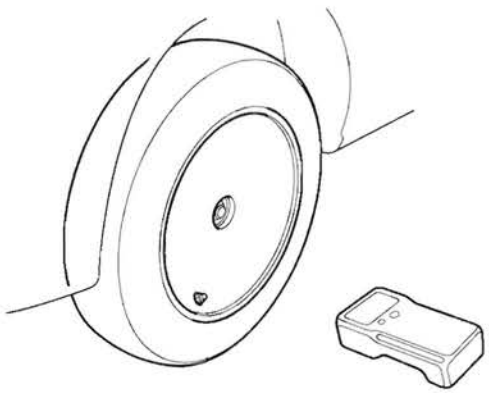

5. Repeat step 4 for each wheel until all four sensor IDs are memorized. When all four IDs are memorized, the low tire pressure indicator blinks.

6. Turn the ignition switch OFF.

7. Test-drive the vehicle at 28 mph (45 km/h) or more for at least 1 minute.

8. Make sure the low pressure indicator does not blink.

9. Turn the ignition switch OFF.

10. Reduce the pressure in one tire until it is less than the appropriate specification.

11. Turn the ignition switch ON (II).

    NOTE: If it has been 5 minutes or more since the end of the last test-drive, reactivate the appropriate tire pressure sensor with the TPMS sensor initializer tool (see page 18-51).

12. Test-drive the vehicle at 28 mph (45 km/h) or more for at least 1 minute.

13. Make sure the low pressure indicator turns on, then inflate the tire (see page 18-5).

14. Repeat steps 9 through 13 for all the other tires.

15. Clear any DTCs with the HDS.

Tire Pressure Sensor Location

Special Tools Required
TPMS sensor initializer tool AKS0620006
Available through the American Honda Tool and Equipment program, 888-424-6857.

This procedure locates where tire pressure sensors 1, 2, 3, and 4 are mounted.
When the activate sensor signal is sent to each wheel using the TPMS sensor initializer tool in sequence, you can locate the tire pressure sensors by the reaction sensor number.
The sensor locations change in these cases:
- Memorizing tire pressure sensor IDs (including replacing the TPMS control unit or the tire pressure sensors).
- Doing a tire rotation.

1. With the ignition switch OFF, connect the HDS to the data link connector (DLC) (A) located under the driver's side of the dashboard.

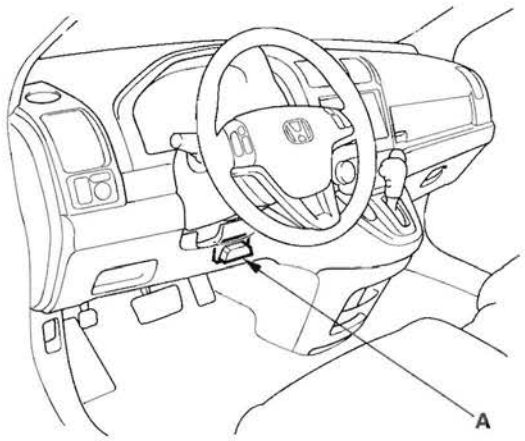

2. Turn the ignition switch ON(II).

3. Make sure the HDS communicates with the vehicle and the TPMS control unit. If it doesn't, troubleshoot the DLC circuit (see page 11-197).

(cont'd)

Tire Pressure Sensor Location (cont'd)

4. Follow the prompts on the HDS to active the tire pressure sensors using the TPMS sensor initializer tool. Start with the left-front (LF) wheel.

   NOTE:
   - See the HDS Help menu for specific instructions.
   - Initialize the wheels in the sequence shown.

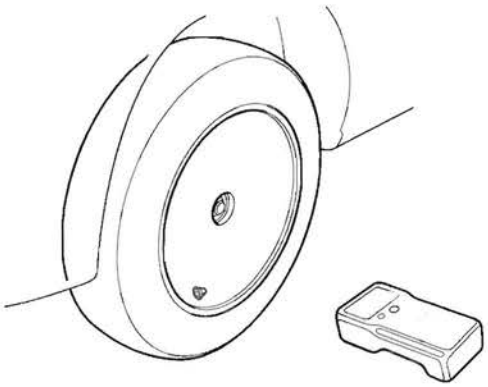

INITIALIZATION SEQUENCE :

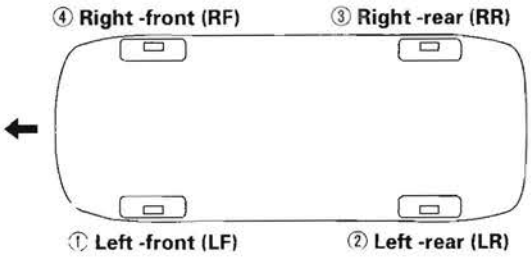

5. Check the HDS screen, and note the active sensor reception order of tire pressure sensors 1, 2, 3, and 4.

   NOTE: An example is shown. The sensor signals are received by the TPMS control unit in this order; sensor 1-fourth, sensor 2-second, sensor 3-third, and sensor 4-first.

Example table

Sensor number	Referent sensor location	Active sensor signal reception order
Sensor 1	Right-front (RF)	4
Sensor 2	Left-rear (LR)	2
Sensor 3	Right-rear (RR)	3
Sensor 4	Left-front (LF)	1

6. Note the sensor location for reference.

7. Turn the ignition switch OFF.

DTC Troubleshooting Index

DTC	Detection Item	Troubleshooting
11	Sensor 1 low tire pressure	(see page 18-61)
13	Sensor 2 low tire pressure	(see page 18-61)
15	Sensor 3 low tire pressure	(see page 18-61)
17	Sensor 4 low tire pressure	(see page 18-61)
21	Sensor 1 abnormally high tire sensor temperature	(see page 18-62)
22	Sensor 2 abnormally high tire sensor temperature	(see page 18-62)
23	Sensor 3 abnormally high tire sensor temperature	(see page 18-62)
24	Sensor 4 abnormally high tire sensor temperature	(see page 18-62)
31	Sensor 1 tire pressure sensor low battery voltage	(see page 18-64)
32	Sensor 1 tire pressure sensor transmitting failure	(see page 18-65)
33	Sensor 2 tire pressure sensor low battery voltage	(see page 18-64)
34	Sensor 2 tire pressure sensor transmitting failure	(see page 18-65)
35	Sensor 3 tire pressure sensor low battery voltage	(see page 18-64)
36	Sensor 3 tire pressure sensor transmitting failure	(see page 18-65)
37	Sensor 4 tire pressure sensor low battery voltage	(see page 18-64)
38	Sensor 4 tire pressure sensor transmitting failure	(see page 18-65)
41	Abnormal signal reception error	(see page 18-66)
51	Sensor 1 initialization status of TPMS control unit is not-completed	(see page 18-67)
53	Sensor 2 initialization status of TPMS control unit is not-completed	(see page 18-67)
55	Sensor 3 initialization status of TPMS control unit is not-completed	(see page 18-67)
57	Sensor 4 initialization status of TPMS control unit is not-completed	(see page 18-67)
81	TPMS control unit failure check	(see page 18-68)
83	No VSP signal	(see page 18-68)
85	CAN data error	(see page 18-69)
91	Sensor 1 tire pressure sensor internal error	(see page 18-70)
93	Sensor 2 tire pressure sensor internal error	(see page 18-70)
95	Sensor 3 tire pressure sensor internal error	(see page 18-70)
97	Sensor 4 tire pressure sensor internal error	(see page 18-70)

Symptom Troubleshooting Index

Symptom	Diagnostic procedure	Also check for
HDS does not communicate with the TPMS control unit or the vehicle	Troubleshooting the DLC circuit (see page 11-197)	PGM-FI DTCs
Low pressure indicator does not come on, and no DTCs are stored	Symptom Troubleshooting (see page 18-71)	
Low pressure indicator does not go off, and no DTCs are stored	Symptom Troubleshooting (see page 18-72)	
TPMS indicator does not come on, and no DTCs are stored	Symptom Troubleshooting (see page 18-73)	
TPMS indicator does not go off, and no DTCs are stored	Symptom Troubleshooting (see page 18-73)	

System Description

TPMS Control Unit Inputs and Outputs for 20P Connector

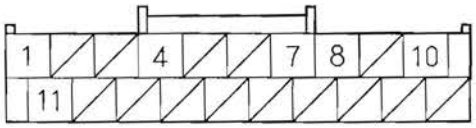

Wire side of female terminals

Terminal number	Wire color	Terminal sign (Terminal name)	Description	Signal		
				Terminal	Conditions	Voltage
1	WHT	CAN H (CAN communication signal high)	Sends the communication signal	——	Ignition switch ON (II)	Pulses
4	BLK	GRN (Ground)	Ground for the TPMS control unit	4-GND	At all time	Less than 0.1 V
7	LT BLU	K-LINE (Data link connector)	Communications with the HDS	——	——	——
8	YEL	IG1 (Ignition switch 1)	Power source for activating the system	8-GND	Ignition switch ON (II)	Battery voltage
					Ignition switch OFF	Less than 0.1 V
10	BLU	+B (Battery positive)	Power source for the TPMS control unit	10-GND	At all times	Battery voltage
11	RED	CAN L (CAN communication signal low)	Sends the communication signal	——	Ignition switch ON (II)	Pulses

(cont'd)

System Description (cont'd)

System Structure

Once the vehicle speed exceeds 28 mph (45 km/h), the TPMS control unit monitors all four tires and the system. If it detects low pressure in a tire, it alerts the driver by turning on the low pressure indicator. If it detects a problem in the system, it turns on the TPMS indicator.

Control unit
Mounted in the middle of the dashboard, the TPMS control unit receives pressure sensor ID signals every time the vehicle speeds exceeds 28 mph (45 km/h). It also receives signals from the transmitters for tire pressure and the sensor condition, and it continuously monitors and controls the system.

Indicators
Two indicators are in the gauge control module: The low pressure indicator comes on when any tire pressure is low, and the TPMS indicator that comes on only if there's a problem with the system.
The low pressure indicator alerts the driver that a tire(s) pressure is low, but does not specify the tire(s) location.

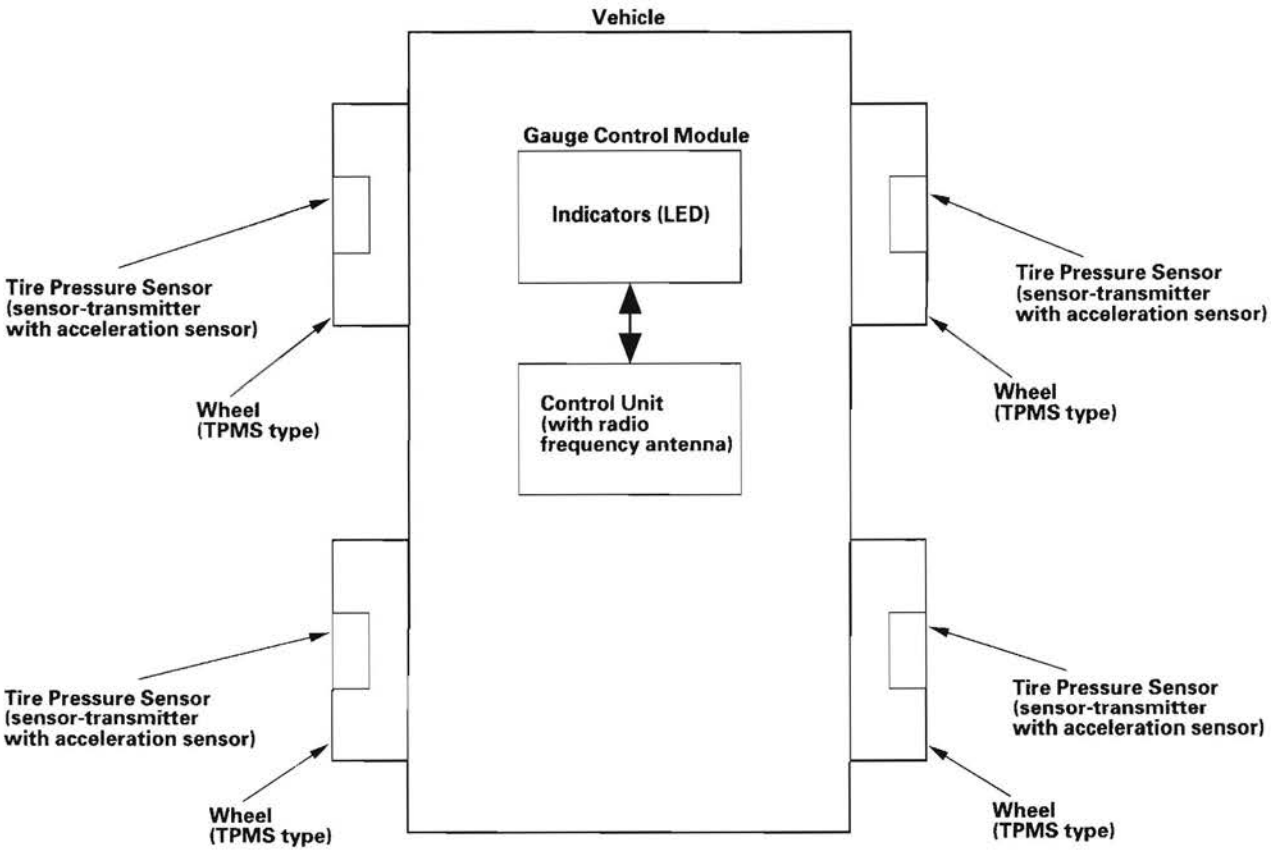

Tire pressure sensor

Each sensor is an integrated unit made up of the tire valve stem, a pressure sensor, and a transmitter. The unit is attached to the inside of the wheel, around the valve stem. The sensor transmits the internal tire information to the control unit once every 60 seconds when the vehicle speed exceeds 28 mph (45 km/h). When the TPMS control unit receives a tire pressure signal that is less than 168 kPa (1.7 kgf/cm², 24 psi), the control unit then turns on the low pressure indicator. When that tire's pressure is increased to more than 190 kPa (1.9 kgf/cm², 28 psi), and the vehicle is driven above 28 mph (45 km/h) the transmitter sends the tire pressure signal to the control unit, and then the control unit turns the indicators off.

Do not mix the tire pressure sensor with another TPMS type.

Sensor active:

- When the wheel starts to rotate, the sensor detects the momentum, and switches the sensor to the normal function mode.
- The LF (low frequency) signal of the Snap-on TPMS initializer tool makes the sensor active though the vehicle is stopped.

  Sensor inactive: When the acceleration sensor detects the wheel is stationary for 5 minutes or more continuously, the tire pressure sensor shuts off automatically, and changes to sleep mode.

Wheels

TPMS will not work unless TPMS type wheels are installed on the vehicle. The original equipment wheels have a "TPMS" mark (A) on them and counterweights (B) cast into the opposite side of the spoke to counter balance the weight of the tire pressure sensor (C).

NOTE: The vehicle is equipped with either aluminum or steel wheels.

Aluminum wheel

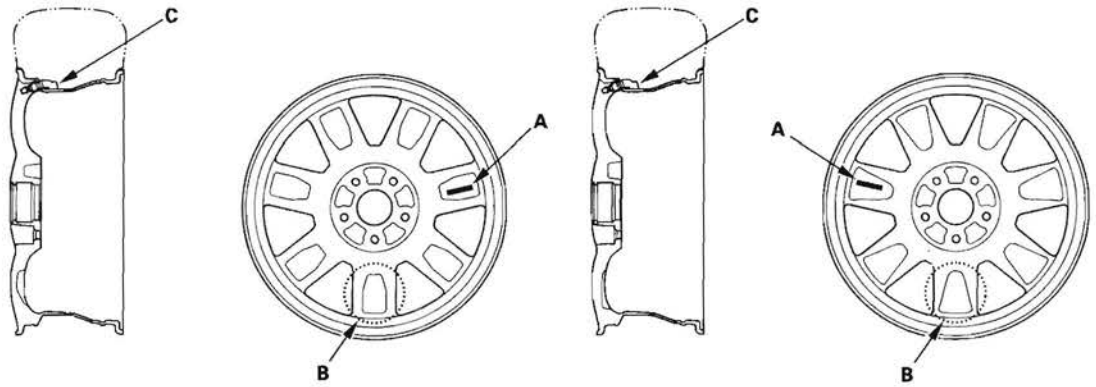

Steel wheel

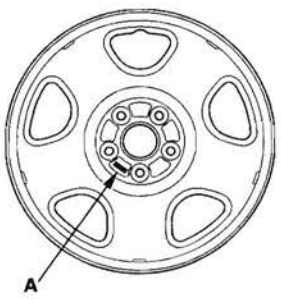

(cont'd)

System Description (cont'd)

System Communication

- When the vehicle is traveling more than 28 mph (45 km/h), an RF (radio frequency) band wave signal is continuously transmitted from each tire pressure sensor to the control unit.
- When the wheels rotate, the tire pressure sensors' momentum is detected, switching them from sleep mode to normal function mode. After the vehicle is stationary for 5 minutes, the sensors switch from normal function mode back to sleep mode to extend their battery life.
- Each tire pressure sensor has its own ID to prevent jamming by similar systems on other vehicles. After memorizing all the sensor IDs, the control unit receives only those specific signals.
- An ID can be memorized manually. The control unit then knows which ID belongs to each tire pressure sensor. This recurring ID confirmation prevents any confusion in the system as a result of doing a normal tire rotation.

NOTE: Be careful not to bend the brackets on the TPMS control unit. Misalignment of the control unit could interfere with sending and receiving signals.

Control Unit
(with Radio Frequency Antenna)

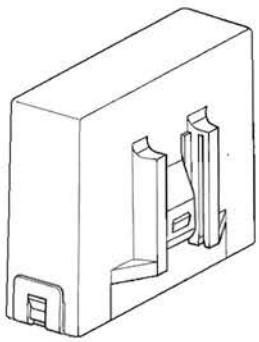

Tire Pressure Sensor
(Sensor-transmitter with acceleration sensor)

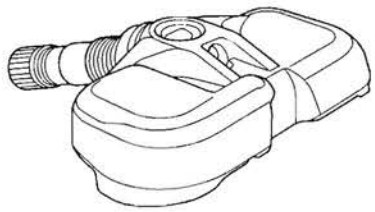

Circuit Diagram

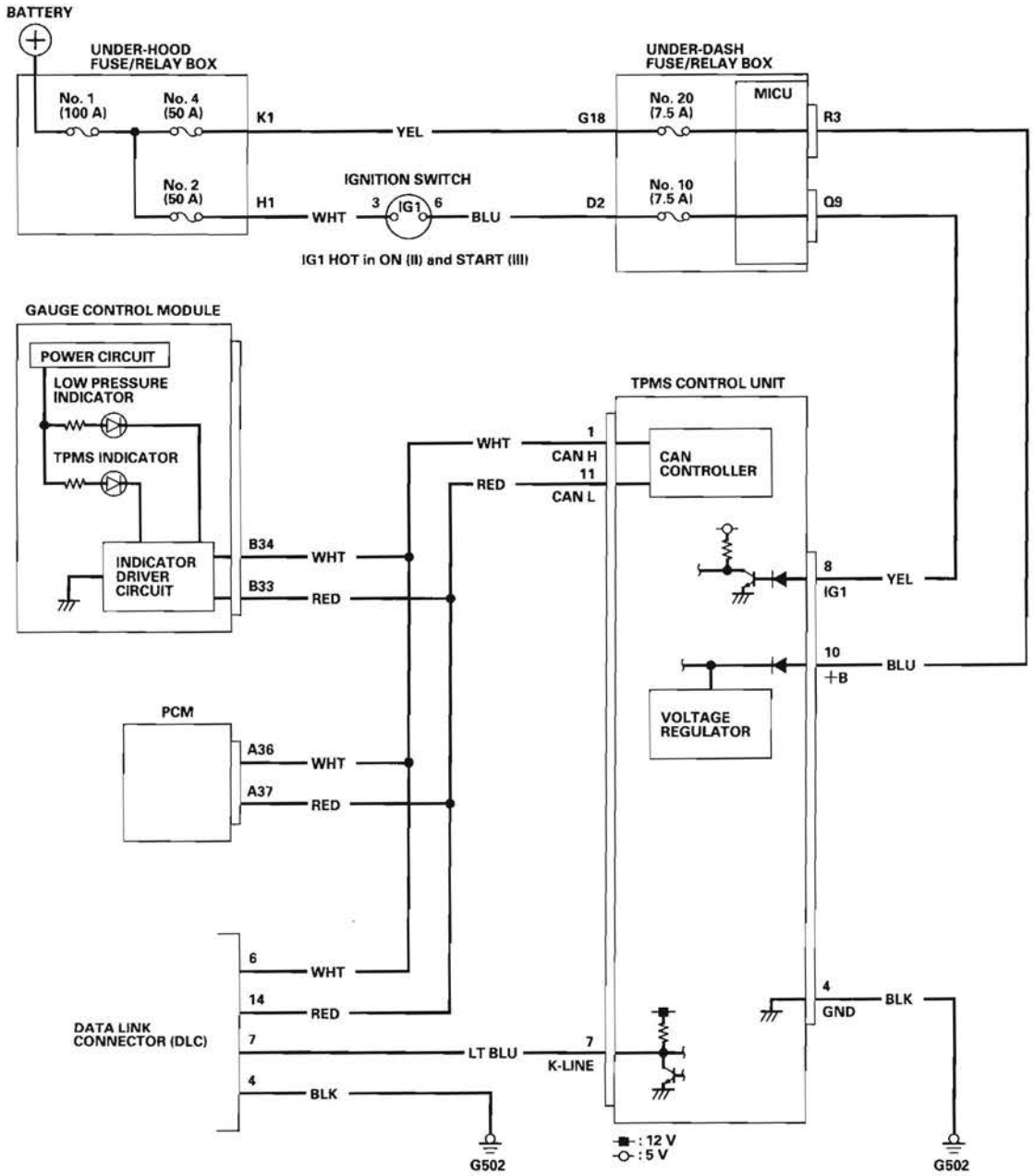

(cont'd)

Circuit Diagram (cont'd)

UNDER-DASH FUSE/RELAY BOX CONNECTOR Q (16P)

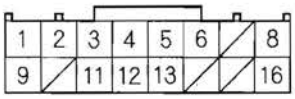

Wire side of female terminals

UNDER-DASH FUSE/RELAY BOX CONNECTOR R (20P)

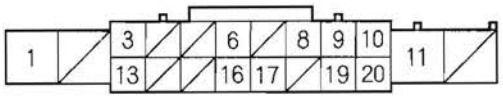

Wire side of female terminals

GAUGE CONTROL MODULE CONNECTOR B (36P)

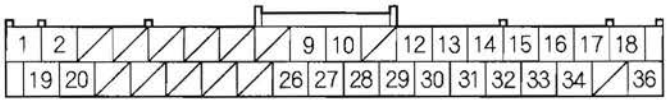

Wire side of female terminals

TPMS CONTROL UNIT 20P CONNECTOR

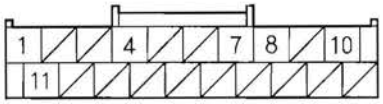

Wire side of female terminals

PCM CONNECTOR A (44P)

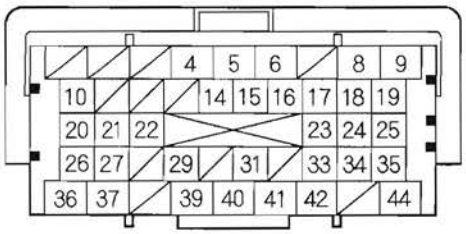

Terminal side of female terminals

DATA LINK CONNECTOR (DLC)

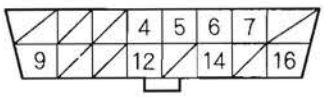

Terminal side of female terminals

DTC Troubleshooting

DTC 11, 13, 15, 17: Low Tire Pressure

NOTE: If low tire pressure is detected, the control unit sets one or more of these DTCs, and turns on the low pressure indicator. If the low pressure indicator comes on due to true low tire pressure, and the customer corrects it before bringing the vehicle in, the DTCs will have been stored, but the indicator will be off.

1. Turn the ignition switch OFF.
2. Check the pressure of all four tires.

   Is there 168 kPa (1.7 kgf/cm², 24 psi) or less?

   YES—Go to step 3.

   NO—Go to step 5.
3. Check for and repair the cause of air loss, and then inflate the tire (see page 18-5).
4. Test-drive the vehicle at 28 mph (45 km/h) or more for at least 1 minute.

   Does the low pressure indicator go off?

   YES—The system is OK at this time. Clear the DTC with the HDS. ■

   NO—Go to step 6.
5. Turn the ignition switch ON (II).
6. Check for DTCs with the HDS.
7. Note the tire pressure sensor(s) number by the indicated DTC.

DTC	Tire pressure sensor
11	No. 1
13	No. 2
15	No. 3
17	No. 4

8. Determine the affected tire location by the tire pressure sensor number (see page 18-51), then check the Tire 1, Tire 2, Tire 3, or Tire 4 Pressure Sensor Transmitter Status in the TPMS DATA LIST with the HDS and the TPMS sensor initializer tool.

   NOTE: If Not defined is shown on the HDS, turn the TPMS sensor initializer tool OFF, rotate the tire 1/4 turn, then turn the TPMS sensor initializer tool ON, and try again. If Not defined is still shown, repeat the procedure in the previous sentence until a response is shown.

   Is NORMAL indicated within one full turn of the tire?

   YES—Go to step 9.

   NO—Check that the tire pressure sensor is properly mounted. If necessary, replace the appropriate tire pressure sensor (see page 18-76). ■
9. Check the Tire 1, Tire 2, Tire 3, or Tire 4 Air Pressure in the TPMS DATA LIST with the HDS, and compare it with the actual measured tire pressure.

   Is the indicated tire pressure on the HDS within 40 kPa (0.4 kgf/cm², 6 psi) of the actual tire pressure?

   YES—Go to step 10.

   NO—Replace the appropriate tire pressure sensor (see page 18-76). ■

(cont'd)

DTC Troubleshooting (cont'd)

10. Clear the DTC with the HDS.
11. Test-drive the vehicle at 28 mph (45 km/h) or more for at least 1 minute.
12. Check for DTCs with the HDS.

    Is DTC 11, 13, 15, or 17 indicated?

    YES—Check for loose terminals and poor connections at the TPMS control unit and G502. If necessary, substitute a know-good TPMS control unit (see page 18-75), and recheck.■

    NO—If any DTCs are indicated, troubleshoot the appropriate DTC. If no DTCs are indicated, the system is OK at this time.■

DTC 21, 22, 23, 24: Abnormally High Tire Sensor Temperature

1. Turn the ignition switch OFF.
2. Make sure the tires have cooled down.

   NOTE: An abnormal rise in the internal temperature of the tires can be caused by
   - Excessive braking
   - Failure to release the parking brake (rear tires only)
   - Leaving the vehicle running while parked
   - Improper assembly of a wheel and tire
3. Test-drive the vehicle at 28 mph (45 km/h) or more for at least 1 minute.

   Does the TPMS indicator go off?

   YES—The system is OK at this time. Clear the DTC with the HDS.■

   NO—Go to step 4.
4. Check for DTCs with the HDS.
5. Note the tire pressure sensor(s) number by the indicated DTC.

DTC	Tire pressure sensor
21	No. 1
22	No. 2
23	No. 3
24	No. 4

6. Determine the affected tire location by the tire pressure sensor number (see page 18-51), then check the Tire 1, Tire 2, Tire 3, or Tire 4 Pressure Sensor Transmitter Status in the TPMS DATA LIST with the HDS and the TPMS sensor initializer tool.

   NOTE: If Not defined is shown on the HDS, turn the TPMS sensor initializer tool OFF, rotate the tire 1/4 turn, then turn the TPMS sensor initializer tool ON, and try again. If Not defined is still shown, repeat the procedure in the previous sentence until a response is shown.

   Is NORMAL indicated within one full turn of the tire?

   YES—Go to step 7.

   NO—Check that the tire pressure sensor is properly mounted. If necessary, replace the appropriate tire pressure sensor (see page 18-76). ■

7. Check the Tire 1, Tire 2, Tire 3, or Tire 4 Air Temperature in the TPMS DATA LIST with the HDS.

   Is 176 °F (80 °C) or more indicated?

   YES—Replace the appropriate tire pressure sensor (see page 18-76). ■

   NO—Go to step 8.

8. Clear the DTC with the HDS.

9. Test-drive the vehicle at 28 mph (45 km/h) or more for at least 1 minute.

10. Check for DTCs with the HDS.

    Is DTC 21, 22, 23, or 24 indicated?

    YES—Check for loose terminals and poor connections at the TPMS control unit and G502. If necessary, substitute a know-good TPMS control unit (see page 18-75), and recheck. ■

    NO—If any DTCs are indicated, troubleshoot the appropriate DTC. If no DTC are indicated, the system is OK at this time. ■

DTC Troubleshooting (cont'd)

DTC 31, 33, 35, 37: Tire Pressure Sensor Low Battery Voltage

NOTE: This problem occurs when the temperature around the sensor is −40 °F (−40 °C) or less. Note that the diagnosis must be made in a place where ambient temperature is −40 °F (−40 °C) or more.

1. Test-drive the vehicle at 28 mph (45 km/h) or more for at least 1 minute.

   Does the TPMS indicator go off?

   YES—The system is OK at this time. Clear the DTC with the HDS. ■

   NO—Go to step 2.

2. Check for DTCs with the HDS.

3. Note the tire pressure sensor(s) number by the indicated DTC.

DTC	Tire pressure sensor
31	No. 1
33	No. 2
35	No. 3
37	No. 4

4. Determine the affected tire location by the tire pressure sensor number (see page 18-51), then check the Tire 1, Tire 2, Tire 3, or Tire 4 Pressure Sensor Transmitter Status in the TPMS DATA LIST with the HDS and the TPMS sensor initializer tool.

   NOTE: If Not defined is shown on the HDS, turn the TPMS sensor initializer tool OFF, rotate the tire 1/4 turn, then turn the TPMS sensor initializer tool ON, and try again. If Not defined is still shown, repeat the procedure in the previous sentence until a response is shown.

   Is NORMAL indicated within one full turn of the tire?

   YES—Go to step 5.

   NO—Check that the tire pressure sensor is properly mounted. If necessary, replace the appropriate tire pressure sensor (see page 18-76). ■

5. Check the Tire 1, Tire 2, Tire 3, or Tire 4 Pressure Sensor Transmitter Battery in the TPMS DATA LIST with the HDS.

   Is LOW indicated?

   YES—Replace the appropriate tire pressure sensor (see page 18-76). ■

   NO—Check for loose terminals and poor connections at the TPMS control unit and G502. If necessary, substitute a know-good TPMS control unit (see page 18-75), and recheck. ■

DTC 32, 34, 36, 38: Tire Pressure Sensor Transmitting Failure

NOTE: Inspect for an aftermarket electrical device interfering with the RF signal from the sensors when driving the vehicle.

1. Turn the ignition switch OFF.
2. Make sure all four wheels are TPMS wheels with the properly mounted tire pressure sensors.

   Are TPMS type wheels with a tire pressure sensor mounted on the vehicle?

   YES—Go to step 5.

   NO—Go to step 3.
3. Install a known-good TPMS wheel.
4. Memorize the tire pressure sensor ID with the HDS (see page 18-50).
5. Turn the ignition switch ON (II).
6. Check for DTCs with the HDS.
7. Note the tire pressure sensor(s) number by the indicated DTC.

DTC	Tire pressure sensor
32	No. 1
34	No. 2
36	No. 3
38	No. 4

8. Determine the affected tire location by the tire pressure sensor number (see page 18-51), then check the Tire 1, Tire 2, Tire 3, or Tire 4 Pressure Sensor Transmitter Status in the TPMS DATA LIST with the HDS and the TPMS sensor initializer tool.

   NOTE: If Not defined is shown on the HDS, turn the TPMS sensor initializer tool OFF, rotate the tire 1/4 turn, then turn the TPMS sensor initializer tool ON, and try again. If Not defined is still shown, repeat the procedure in the previous sentence until a response is shown.

   Is NORMAL indicated for all four tires at least while one full turn of each tire?

   YES—Go to step 9.

   NO—Check that the tire pressure sensor is properly mounted. If necessary, replace the appropriate tire pressure sensor (see page 18-76).■

(cont'd)

DTC Troubleshooting (cont'd)

9. Test-drive the vehicle at 28 mph (45 km/h) or more for at least 1 minute.

10. Check the Tire 1, Tire 2, Tire 3, or Tire 4 Pressure Sensor Transmitter Status in the TPMS DATA LIST with the HDS and the TPMS sensor initializer tool.

    NOTE: If Not defined is shown on the HDS, turn the TPMS sensor initializer tool OFF, rotate the tire 1/4 turn, then turn the TPMS sensor initializer tool ON, and try again. If Not defined is still shown, repeat the procedure in the previous sentence until a response is shown.

    Is NORMAL indicated for all four tires within one full turn of each tire?

    YES—The system is OK at this time. Clear the DTC with the HDS. ■

    NO—Replace the appropriate tire pressure sensor (see page 18-76). ■

DTC 41: Abnormal Signal Reception Error

NOTE: Inspect for an aftermarket device interfering with the RF signal from the sensors when driving the vehicle.

1. Turn the ignition switch OFF.

2. Make sure all four wheels are TPMS wheels with tire pressure sensors.

   Are TPMS type wheels with tire pressure sensors mounted on the vehicle?

   YES—Go to step 5.

   NO—Go to step 3.

3. Install a known-good TPMS wheel.

4. Memorize the tire pressure sensor ID with the HDS (see page 18-50).

5. Turn the ignition switch ON (II).

6. Check the Tire 1, Tire 2, Tire 3, or Tire 4 Pressure Sensor Transmitter Status in the TPMS DATA LIST with the HDS and the TPMS sensor initializer tool.

   NOTE: If Not defined is shown on the HDS, turn the TPMS sensor initializer tool OFF, rotate the tire 1/4 turn, then turn the TPMS sensor initializer tool ON, and try again. If Not defined is still shown, repeat the procedure in the previous sentence until a response is shown.

   Is NORMAL indicated for one tire or more within one full turn of the tire?

   YES—If any DTCs are indicated, troubleshoot the appropriate DTC. If no DTC are indicated, the system is OK at this time. ■

   NO—Check for loose terminals and poor connections at the TPMS control unit and G502. If necessary, substitute a know-good TPMS control unit (see page 18-75), and recheck. ■

DTC 51, 53, 55, 57: Initialization Status of TPMS Control Unit is Not-completed

1. Turn the ignition switch OFF.
2. Make sure all four wheels are TPMS wheels with the properly mounted tire pressure sensors.

   Are TPMS type wheels with tire pressure sensors mounted on the vehicle?

   YES—Go to step 4.

   NO—Go to step 3.
3. Install a known-good TPMS wheel.
4. Memorize the tire pressure sensor ID with the HDS (see page 18-50).
5. Turn the ignition switch ON (II).
6. Check the DTC with the HDS.
7. Test-drive the vehicle at 28 mph (45 km/h) or more for at least 1 minute or more.
8. Check for DTCs with the HDS.

   Is DTC 51, 53, 55, or 57 indicated?

   YES—Check for loose terminals and poor connections at the TPMS control unit and G502. If necessary, substitute a know-good TPMS control unit (see page 18-75), and recheck. ■

   NO—The system is OK at this time. ■

DTC Troubleshooting (cont'd)

DTC 81: TPMS Control Unit Failure (RAM/ROM/ADC/EEPROM/ALU) Check

NOTE: Low battery voltage can cause this DTC. Make sure the battery is fully charged and in good condition.

1. Turn the ignition switch ON (II).
2. Clear the DTC with the HDS.
3. Turn the ignition switch OFF, then turn it ON (II) again.
4. Check for DTCs with the HDS.

   Is DTC 81 indicated?

   YES—Replace the TPMS control unit (see page 18-75).■

   NO—The system is OK at this time.■

DTC 83: No VSP Signal

1. Turn the ignition switch ON (II).
2. Clear the DTC with the HDS.
3. Test-drive the vehicle at 7 mph (10 km/h) or more.
4. Check the Vehicle Speed in the TPMS DATA LIST with the HDS.

   Is the vehicle speed indicated?

   YES—The system is OK at this time.■

   NO—Go to step 5.

5. Check for DTCs with the HDS.

   Is DTC 85 indicated?

   YES—Go to DTC 85 troubleshooting (see page 18-69).■

   NO—Go to step 6.

6. Check the speedometer.

   Does the speedometer register speed?

   YES—Check for loose terminals and poor connections at the TPMS control unit and G502. If necessary, substitute a known-good TPMS control unit (see page 18-75), and recheck.■

   NO—Substitute a known-good PCM (see page 11-8), and retest. If no codes are shown, replace the original PCM (see page 11-219).■

DTC 85: CAN Data Error

1. Turn the ignition switch ON (II).
2. Clear the DTC with the HDS.
3. Turn the ignition switch OFF, then turn it ON (II) again.
4. Wait about 5 seconds.
5. Check for DTCs with the HDS.

   Is DTC 85 indicated?

   YES—Go to step 6.

   NO—The system is OK at this time. ■
6. Test-drive the vehicle.

   Does the speedometer work?

   YES—Go to step 10.

   NO—Go to step 7.
7. Turn the ignition switch OFF.
8. Disconnect the TPMS control unit 20P connector.
9. Test-drive the vehicle.

   Does the speedometer work?

   YES—Check for loose terminals and poor connections at the TPMS control unit and G502. If necessary, substitute a known-good TPMS control unit (see page 18-75), and recheck. ■

   NO—Turn the ignition switch OFF, and reconnect all connectors, then check and troubleshoot the fuel and emissions system (see page 11-3). ■
10. Turn the ignition switch OFF.
11. Short the SCS line with the HDS.
12. Disconnect PCM connector A (44P).
13. Disconnect the TPMS control unit 20P connector.
14. Check for continuity between the TPMS control unit 20P connector terminals and the PCM connector A (44P) terminals individually (see table).

Terminal name	TPMS control unit terminal	PCM A terminal
CAN L	No. 11	No. 37
CAN H	No. 1	No. 36

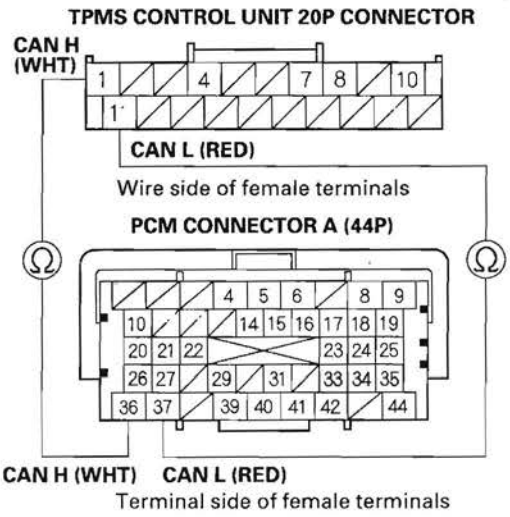

Is there continuity?

YES—Check for loose terminals and poor connections at the TPMS control unit and G502. If necessary, substitute a known-good TPMS control unit (see page 18-75), and recheck. ■

NO—Repair open in the wire between the TPMS control unit and the PCM. ■

DTC Troubleshooting (cont'd)

DTC 91, 93, 95, 97: Tire Pressure Sensor Internal Error

1. Turn the ignition switch ON (II).
2. Check for DTCs with the HDS.
3. Note the tire pressure sensor(s) number by the indicated DTC.

DTC	Tire Pressure Sensor
91	No. 1
93	No. 2
95	No. 3
97	No. 4

4. Determine the affected tire location by the tire pressure sensor number (see page 18-51), then check the Tire 1, Tire 2, Tire 3, or Tire 4 Pressure Sensor Transmitter Status in the TPMS DATA LIST with the HDS and the TPMS sensor initializer tool.

   NOTE: If Not defined is shown on the HDS, turn the TPMS sensor initializer tool OFF, rotate the tire 1/4 turn, then turn the TPMS sensor initializer tool ON, and try again. If Not defined is still shown, repeat the procedure in the previous sentence until a response is shown.

   Is NORMAL indicated for all four tires within one full turn of each tire?

   YES—Go to step 5.

   NO—Check that the tire pressure sensor is properly mounted. If necessary, replace the appropriate tire pressure sensor (see page 18-76).■

5. Clear the DTC with the HDS.
6. Test-drive the vehicle at 28 mph (45 km/h) or more for at least 1 minute.
7. Check for DTCs with the HDS.

   Is DTC 91, 93, 95, or 97 indicated?

   YES—Replace the appropriate tire pressure sensor (see page 18-76).■

   NO—If any DTCs are indicated, troubleshoot the appropriate DTC. If no DTCs are indicated, the system is OK at this time.■

Symptom Troubleshooting

Low pressure indicator does not come on, and no DTCs are stored

1. Turn the ignition switch ON (II).
2. Check the low pressure indicator for several seconds when the ignition switch is turned ON (II).

   Did the indicator come on and then go off?

   YES—Go to step 3.

   NO—Go to step 8.
3. Turn the ignition switch OFF.
4. Check the pressure in all four tires.

   Is the tire pressure 168 kPa (1.7 kgf/cm², 24 psi) or less?

   YES—Go to step 5.

   NO—The system is OK at this time. ■
5. Turn the ignition switch ON (II).
6. Determine the affected tire location by the tire pressure sensor number (see page 18-51), then check the Tire 1, Tire 2, Tire 3, or Tire 4 Pressure Sensor Transmitter Status in the TPMS DATA LIST with the HDS and the TPMS sensor initializer tool.

   NOTE: If Not defined is shown on the HDS, turn the TPMS sensor initializer tool OFF, rotate the tire 1/4 turn, then turn the TPMS sensor initializer tool ON, and try again. If Not defined is still shown, repeat the procedure in the previous sentence until a response in shown.

   Is NORMAL indicated within one full turn the tire?

   YES—Go to step 7.

   NO—Check that the tire pressure sensor is properly mounted. If necessary, replace the appropriate tire pressure sensor (see page 18-76). ■
7. Check the Tire 1, Tire 2, Tire 3, or Tire 4 Air Pressure in the TPMS DATA LIST with the HDS, and compare with the actual measured tire pressure.

   Is the indicated tire pressure on the HDS within 40 kPa (0.4 kgf/cm², 6 psi) the actual tire pressure?

   YES—Go to step 8.

   NO—Replace the appropriate tire pressure sensor (see page 18-76). ■
8. Wait about 5 seconds with the ignition switch turned ON (II).
9. Check for gauge DTCs with the HDS (see page 22-6).

   Is any gauge DTC indicated?

   YES—Troubleshoot the indicated gauge DTC. ■

   NO—Go to step 10.

(cont'd)

Symptom Troubleshooting (cont'd)

10. Turn the ignition switch OFF.
11. Disconnect the TPMS control unit 20P connector.
12. Measure voltage between TPMS control unit 20P connector terminals No. 4 and No. 8.

TPMS CONTROL UNIT 20P CONNECTOR

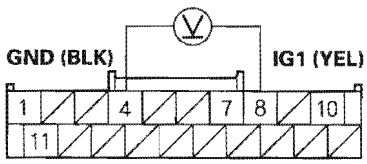

Wire side of female terminals

Is there battery voltage?

YES—Repair short to power in the wire between the TPMS control unit and the No. 10 (7.5 A) fuse in the under-dash fuse/relay box. ■

NO—Check for loose terminals and poor connections at the TPMS control unit and G502. If necessary, substitute a known-good TPMS control unit (see page 18-75), and recheck. ■

Low pressure indicator does not go off, and no DTCs are stored

1. Turn the ignition switch OFF.
2. Disconnect the TPMS control unit 20P connector.
3. Turn the ignition switch ON (II).
4. Check the low pressure indicator for several seconds when the ignition switch is turned ON (II).

Did the indicator come on and then go off?

YES—Check for loose terminals and poor connections at the TPMS control unit and G502. If necessary, substitute a known-good TPMS control unit (see page 18-75), and recheck. ■

NO—Do the troubleshooting for the gauge control module (see page 22-229). If necessary, substitute a known-good gauge control module (see page 22-247), and recheck. ■

TPMS indicator does not come on, and no DTCs are stored

1. Turn the ignition switch OFF.
2. Disconnect the TPMS control unit 20P connector.
3. Turn the ignition switch ON (II).
4. Check the TPMS indicator for several seconds when the ignition switch is turned ON (II).

   Did the indicator come on and then go off?

   YES—Check for loose terminals and poor connections at the TPMS control unit and G502. If necessary, substitute a known-good TPMS control unit (see page 18-75), and recheck. ■

   NO—Do the troubleshooting for the gauge control module (see page 22-229). If necessary, substitute a known-good gauge control module (see page 22-247), and recheck. ■

TPMS indicator does not go off, and no DTCs are stored

NOTE: Check for gauge DTCs with the HDS (see page 22-6). If gauge DTCs are stored, troubleshoot those DTCs first.

1. Turn the ignition switch ON (II).
2. Check the TPMS indicator for several seconds when the ignition switch is turned ON (II).

   Did the indicator come on and then go off?

   YES—The system is OK at this time. ■

   NO—Go to step 3.

3. Turn the ignition switch OFF.
4. Check the No. 20 (7.5 A) fuse in the under-dash fuse/relay box.

   Is the fuse blown?

   YES—Replace the No. 20 (7.5 A) fuse, and recheck. ■

   NO—Reinstall the fuse, then go to step 5.

5. Check the No. 10 (7.5 A) fuse in the under-dash fuse/relay box.

   Is the fuse blown?

   YES—Replace the No. 10 (7.5 A) fuse, and recheck. ■

   NO—Reinstall the fuse, then go to step 6.

6. Disconnect the TPMS control unit 20P connector.

(cont'd)

Symptom Troubleshooting (cont'd)

7. Measure voltage between body ground and TPMS control unit 20P connector terminal No. 10.

TPMS CONTROL UNIT 20P CONNECTOR

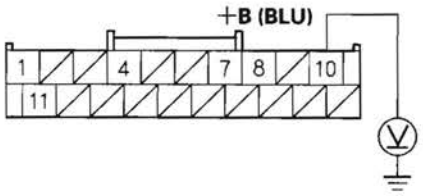

Wire side of female terminals

Is there battery voltage?

YES—Go to step 8.

NO—Repair open in the wire between the TPMS control unit and the No. 20 (7.5 A) fuse in the under-dash fuse/relay box. ■

8. Turn the ignition switch ON (II).

9. Measure voltage between body ground and TPMS control unit 20P connector terminal No. 8.

TPMS CONTROL UNIT 20P CONNECTOR

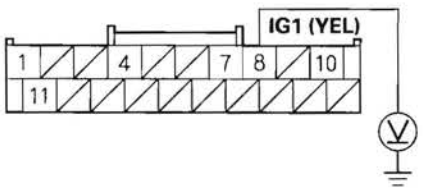

Wire side of female terminals

Is there battery voltage?

YES—Go to step 10.

NO—Repair open in the wire between the TPMS control unit and the No. 10 (7.5 A) fuse in the under-dash fuse/relay box. ■

10. Turn the ignition switch OFF.

11. Reconnect the TPMS control unit 20P connector.

12. Turn the ignition switch ON (II).

13. Measure voltage between body ground and TPMS control unit 20P connector terminal No. 4.

TPMS CONTROL UNIT 20P CONNECTOR

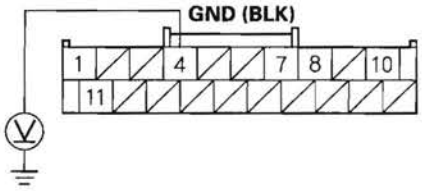

Wire side of female terminals

Is there 0.1 V or more?

YES—Repair open or high resistance in the wire between the TPMS control unit and body ground (G502). ■

NO—Do the troubleshooting for the gauge control module (see page 22-229). If the gauge control module is OK, check for loose terminals and poor connections at the TPMS control unit. If necessary, substitute a known-good TPMS control unit (see page 18-75), and recheck. ■

TPMS Control Unit Replacement

NOTE: Make sure the TPMS control unit mounting bracket is not bent or twisted as this may affect its communication with the tire pressure sensors.

1. Remove both sides of the front console covers (see page 20-102).
2. Remove the dashboard center lower cover (see page 20-95).
3. Disconnect the TPMS control unit connector (A).

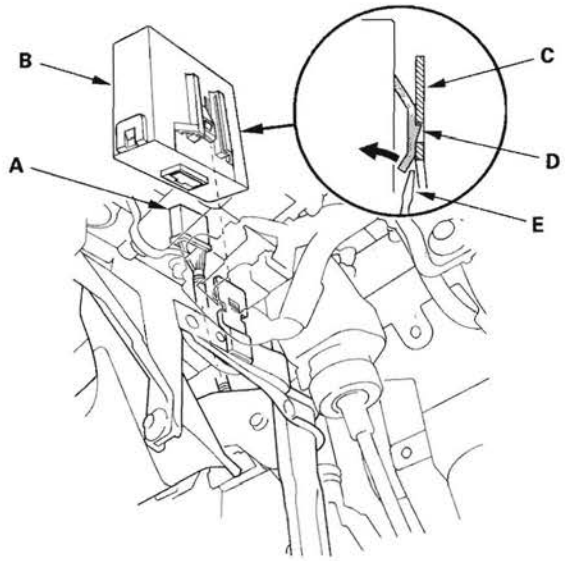

4. Remove the TPMS control unit (B) from the bracket (C).

   NOTE: While separating the TPMS control unit from the bracket, release the hook (D) on the TPMS control unit using a flat-tipped screwdriver (E), and push up to release it from the bracket.

5. Install the TPMS control unit in the reverse order of removal.

   NOTE: Make sure the TPMS control unit is properly installed. You will hear a click when the TPMS control unit is securely mounted on the bracket.

6. Connect the HDS, and memorize the pressure sensor IDs using the TPMS sensor initializer tool (see page 18-50).

Tire Pressure Sensor Replacement

Removal

1. Raise the vehicle, and support it with safety stands in the proper locations (see page 1-7).

2. Remove the wheel with the faulty sensor.

3. Remove the tire valve cap and the valve core, and let the tire deflate.

4. Remove any balance weights, and then break the bead loose from the wheel with a commercially available tire changer (A).

NOTICE

Note these items to avoid damaging the tire pressure sensor:

- Do the outside of the wheel first.
- Position the wheel as shown so the valve stem (B) is 90 degrees from the bead breaker (C) as shown.
- Do not position the bead breaker of the tire changer too close to the rim.

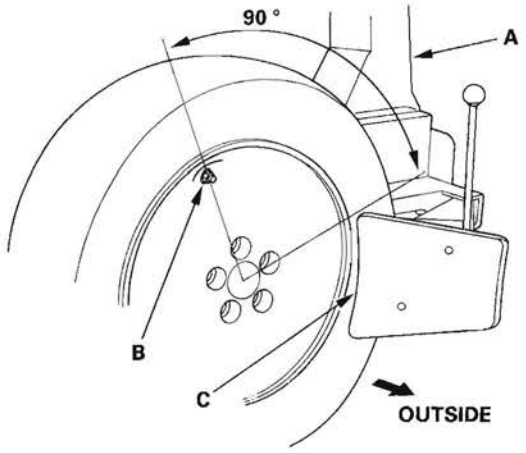

5. Position the wheel so the tire machine (A) and tire iron (B) are next to the valve stem (C) and will move away from it when the machine starts. Then remove the tire from the wheel.

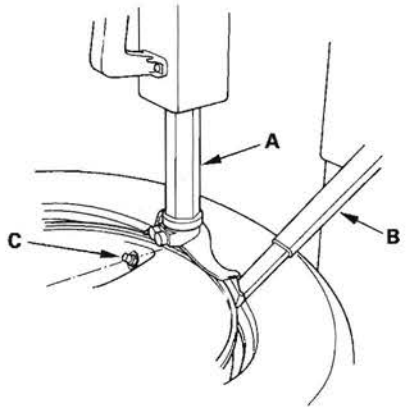

6. Remove the valve stem nut (A) and washer (B), then remove the tire pressure sensor with valve stem (C) from the wheel.

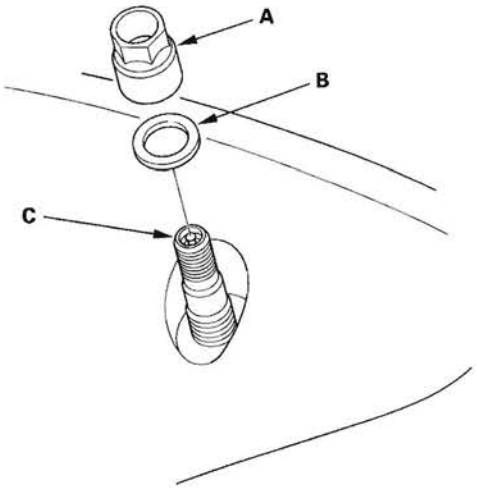

7. Remove and discard the valve stem grommet (A) from the tire pressure sensor (B).

NOTE:
- The valve stem grommet might stay in the wheel; make sure you remove it.
- Always use a new valve stem grommet whenever the tire pressure sensor has been removed from the wheel. When only removing a tire from the wheel, replace the valve stem grommet if it is possible.

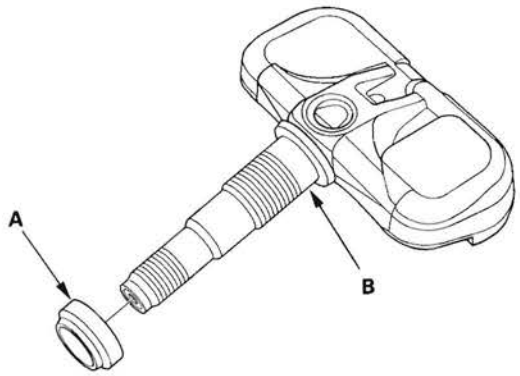

Installation

NOTE:
- Use only wheels that have a "TPMS" stamp (A) on them.
- This vehicle may be equipped with either type 1, type 2, or type 3 aluminum wheels, or steel wheels.

TYPE 1 (ALUMINUM WHEEL) TYPE 2 (ALUMINUM WHEEL)

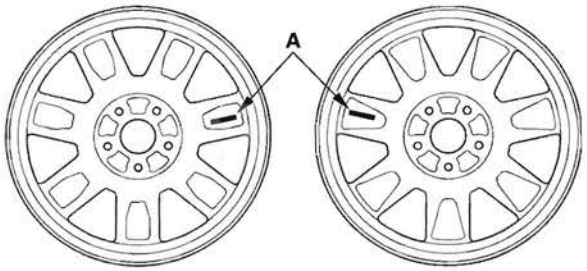

TYPE 3 (ALUMINUM WHEEL)

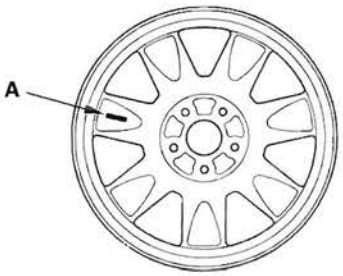

STEEL WHEEL

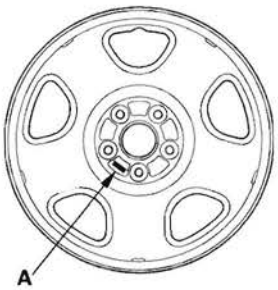

(cont'd)

Tire Pressure Sensor Replacement (cont'd)

1. Before installing the tire pressure sensor, clean the mating surfaces on the sensor and the wheel.

2. Install the tire pressure sensor (A) and the washer (B) to the wheel (C), and tighten the valve stem nut (D) finger tight. Make sure the pressure sensor is resting on the wheel.

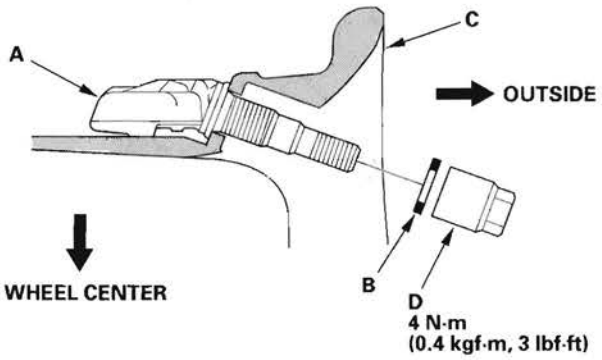

3. Tighten the valve stem nut to the specified torque while holding the tire pressure sensor.

   NOTE: Do not use air or electric impact tools to tighten a valve stem nut.

4. Lube the tire bead sparingly, and position the wheel so the tire machine (A) and tire iron (B) are next to the valve stem (C) and will move away from it when the machine starts. Then install the tire onto the wheel.

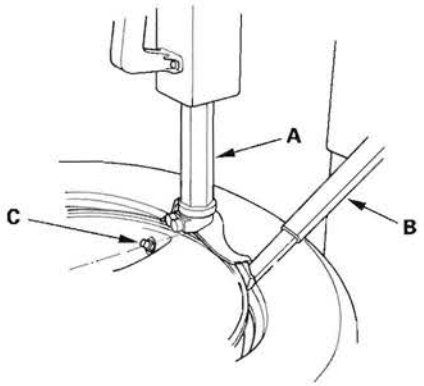

5. With a dry air source, inflate the tire to 300 kPa (3.1 kgf/cm^2, 44 psi) to seat the tire bead to the rim, then adjust the tire pressure (see page 18-5).

   NOTE: Make sure the tire bead is seated on both sides of the rim uniformly.

6. Check the valve stem nut tightening torque, then install the valve stem cap.

7. Check and adjust the wheel balance, then install the wheels on the vehicle. Torque the wheels to specifications.

8. Remove the jack stands, and lower the jack.

9. Connect the HDS, and memorize the pressure sensor ID(s) using the TPMS sensor initializer tool (see page 18-50).

Brakes

Conventional Brake Components

Special Tools 19-2
Component Location Index 19-3
Brake System Inspection and Test 19-4
Symptom Troubleshooting 19-5
Brake Pedal and Brake Pedal Position Switch Adjustment 19-6
Parking Brake Inspection and Adjustment 19-7
Brake System Bleeding 19-9
Brake System Indicator Circuit Diagram 19-10
Parking Brake Switch Test 19-11
Brake Fluid Level Switch Test 19-11
Front Brake Pad Inspection and Replacement 19-12
Front Brake Disc Inspection 19-15
Front Brake Caliper Overhaul 19-16
Master Cylinder Replacement 19-17
Master Cylinder Inspection 19-18
Brake Booster Test 19-19
Brake Booster Replacement 19-20
Rear Brake Pad Inspection and Replacement 19-22
Rear Brake Disc Inspection 19-25
Rear Brake Caliper Overhaul 19-26
Parking Brake Inspection 19-27
Parking Brake Shoe Replacement 19-29
Parking Brake Shoe Lining Break-in 19-32
Brake Pedal Replacement 19-33
Brake Hose and Line Inspection 19-34
Brake Hose Replacement 19-35
Parking Brake Cable Replacement 19-37

VSA (Vehicle Stability Assist) System Components 19-39

Special Tools

Ref. No.	Tool Number	Description	Qty
①	07AAE-SEPA101	Brake Caliper Piston Compressor	1

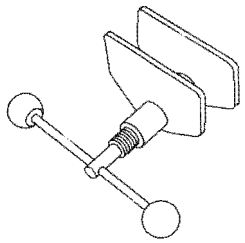

①

Component Location Index

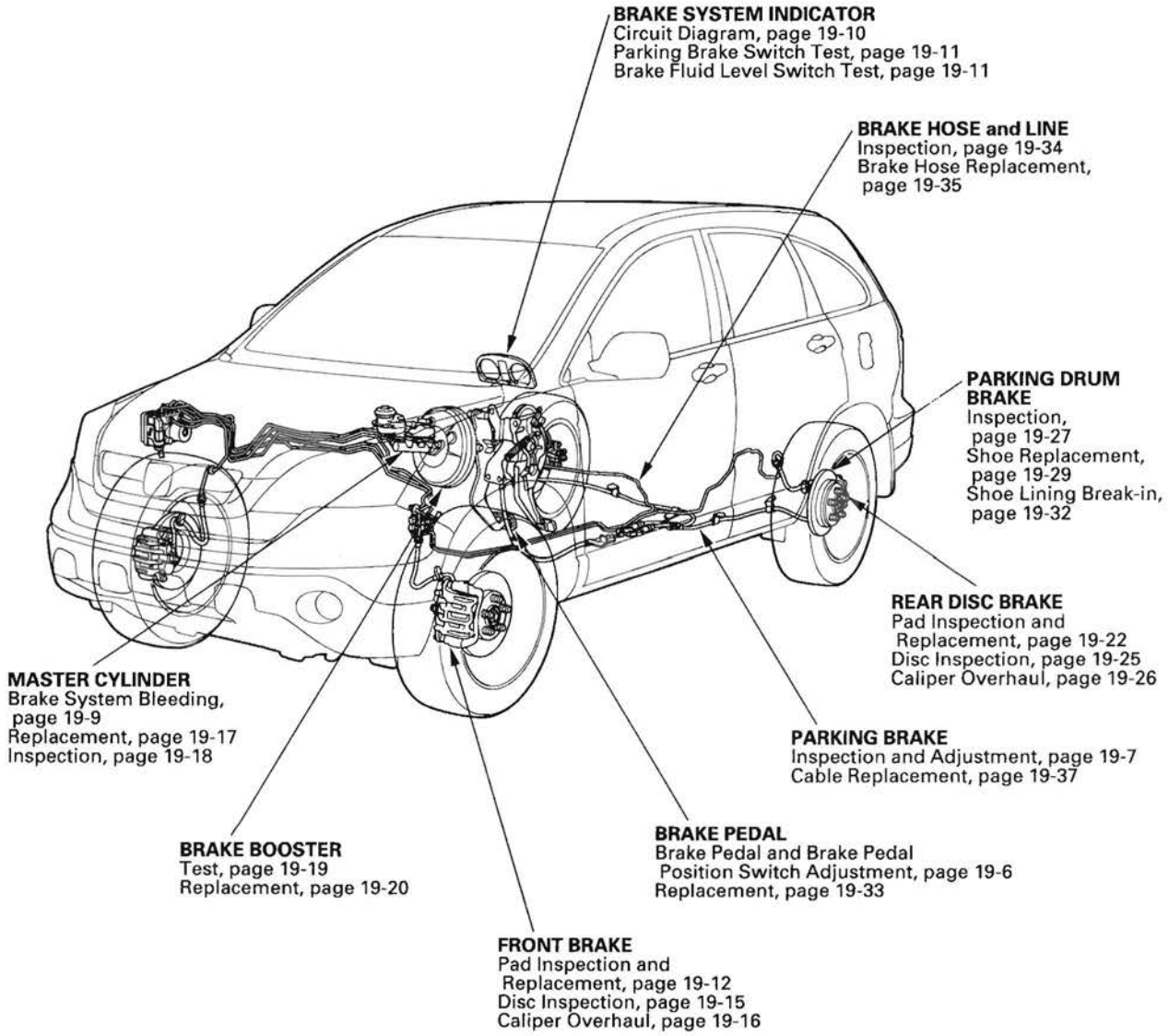

Brake System Inspection and Test

Inspect the brake system components listed. Repair or replace any parts that are leaking or damaged.

Component Inspections

Component	Procedure	Also check for
Master Cylinder	Look for damage or signs of fluid leakage at: • Subreservoir tank, reservoir tank, or master cylinder body. • Lines, reservoir tank hose and grommets, and their joints. • Between master cylinder and booster.	Bulging seat at reservoir cap. This is a sign of fluid contamination.
Brake Hoses	Look for damage or signs of fluid leakage at: • Line joints and banjo bolt connections. • Hoses and lines, also inspect for twisting or damage.	Bulging, twisted, or bent lines.
Caliper	Look for damage or signs of fluid leakage at: • Piston seal. • Banjo bolt connections. • Bleed screw.	Seized or sticking caliper pins.
VSA Modulator-control Unit	Look for damage or signs of fluid leakage at: • Line joints. • Modulator-control unit.	

Brake System Test

Brake pedal sinks/fades when braking

1. Set the parking brake, and start the engine, then turn off the A/C switch. Allow the engine to warm up to normal operating temperature (radiator fan comes on twice).
2. Attach a 50 mm (2 in.) piece of masking tape along the bottom of the steering wheel, and draw a horizontal reference mark across it.
3. With the transmission in P or N position, press and hold the brake pedal lightly (about the same pressure needed to keep an A/T-equipped vehicle from creeping), then release the parking brake.
4. While still holding the brake pedal, hook the end of the tape measure behind the brake pedal, then pull the tape up to the steering wheel. Note the measurement between the brake pedal and the reference mark on the steering wheel.
5. Apply steady pressure to the brake pedal for 3 minutes.
6. Watch the tape measure.
   - If the measurement increases 10 mm (3/8 in.) or less, the master cylinder is OK.
   - If the measurement increases more than 10 mm (3/8 in.), replace the master cylinder.

Symptom Troubleshooting

Rapid brake pad wear, vehicle vibration (after a long drive), or high, hard brake pedal

NOTE: Make sure that the caliper pins are installed correctly.
The upper caliper pin B and lower caliper pin A are different. If the pins are installed in the wrong location, it will cause, vibration, uneven or rapid brake pad wear, and possibly uneven tire wear. For proper caliper pin location (see page 19-16).

1. Drive the vehicle until the brakes drag or until the pedal is high and hard. This can take 20 or more brake pedal applications during an extended test-drive.

2. With the engine running, raise the vehicle on a lift, and spin all four wheels by hand.

   Is there brake drag at any of the wheels?

   YES—Go to step 3.

   NO—Look for other causes of the pad wear, high pedal, or vehicle vibration. ■

3. Turn the engine off, pump the brake pedal to deplete the vacuum in the brake booster, and then spin the wheels again to check for brake drag.

   Is there brake drag at any of the wheels?

   YES—Go to step 4.

   NO—Replace the brake booster (see page 19-20). ■

4. Without removing the brake lines, unbolt and separate the master cylinder from the booster, then spin the wheels to check for brake drag.

   Is there brake drag at any of the wheels?

   YES—Go to step 5.

   NO—Check the brake pedal position switch adjustment and pedal free play (see page 19-6). ■

5. Loosen the hydraulic lines at the master cylinder, then spin the wheels to check for brake drag.

   Is there brake drag at any of the wheels?

   YES—Go to step 6.

   NO—Check the master cylinder reservoir and subreservoir tanks for contamination in the brake fluid. If you find contamination, flush the entire brake system of all contaminated fluid. If the brake fluid is OK, replace the master cylinder (see page 19-17). ■

6. Loosen the bleed screws at each caliper, then spin the wheels to check for brake drag.

   Is there brake drag at any of the wheels?

   YES—Check the master cylinder reservoir and subreservoir tanks for contamination in the brake fluid. If you find contamination, flush the entire brake system of all contaminated fluid. If the brake fluid is OK, disassemble and repair the caliper on the wheel(s) with brake drag. ■

   NO—Look for and replace any damaged brake lines. If all brake lines are OK, replace the VSA modulator-control unit (see page 19-97). ■

Brake Pedal and Brake Pedal Position Switch Adjustment

Pedal Height

1. Turn the brake pedal position switch (A) counterclockwise, and pull it back until it is no longer touching the brake pedal.

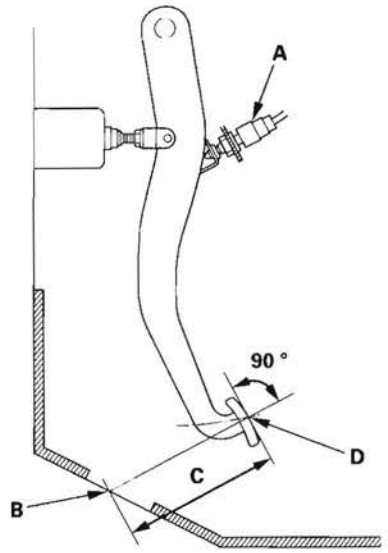

2. Pull back the carpet and find the cutout (B) in the insulator. Lift up the insulator cutout and measure the pedal height (C) at the middle of the left side center of the pedal pad (D) to the floor.

   Standard pedal height (with carpet removed):
   165 mm (6 1/2 in.)

3. Loosen the pushrod locknut (A), and screw the pushrod (B) in or out with pliers until the standard pedal height from the floor is reached. After adjustment, tighten the locknut firmly. Do not adjust the pedal height with the pushrod pressed.

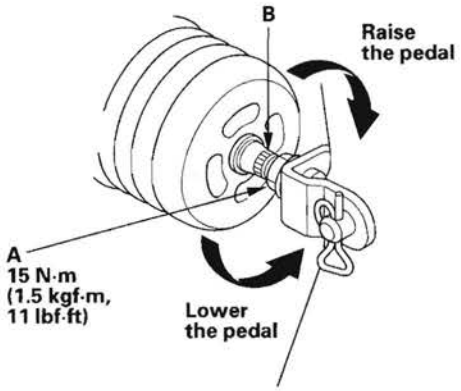

Brake Pedal Position Switch Clearance

4. Lift up on the brake pedal by hand. Push in the brake pedal position switch until its plunger is fully pressed (threaded end (A) touching the pad (B) on the pedal arm). Then, turn the switch 45 ° clockwise to lock it. The gap between the brake pedal position switch and the pad is automatically adjusted to 0.7 mm (0.028 in.) by locking the switch. Make sure the brake lights go off when the pedal is released.

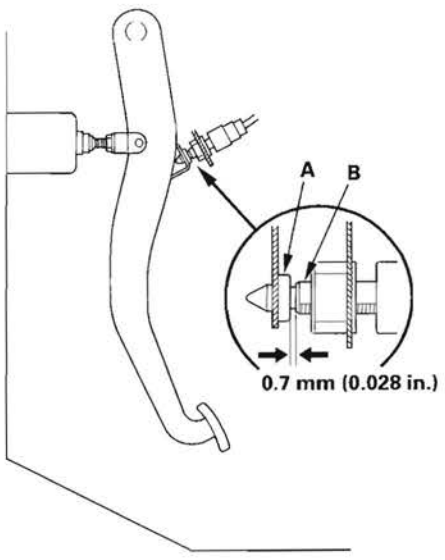

5. Check the brake pedal free play.

Pedal Free Play

1. With the engine off, inspect the pedal free play (A) on the pedal pad (B) by pushing the pedal by hand. If the brake pedal free play is insufficient, it may result in brake drag. Check for a misadjusted the brake pedal position switch (C).

   Free play: 1—5 mm (1/16—3/16 in.)

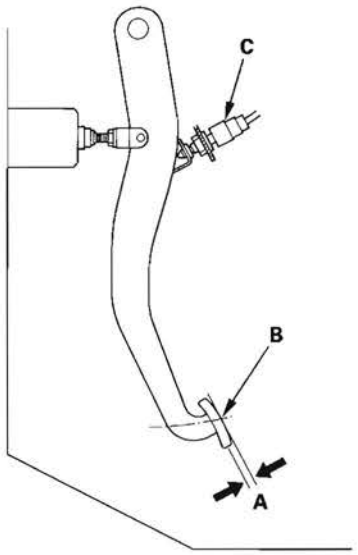

Parking Brake Inspection and Adjustment

Inspection

1. Press the parking brake pedal (A) with 294 N (30 kgf, 66 lbf) of force to fully apply the parking brake. The parking brake pedal should be locked within the specified number of clicks.

   Pedal locked clicks: 5 to 6

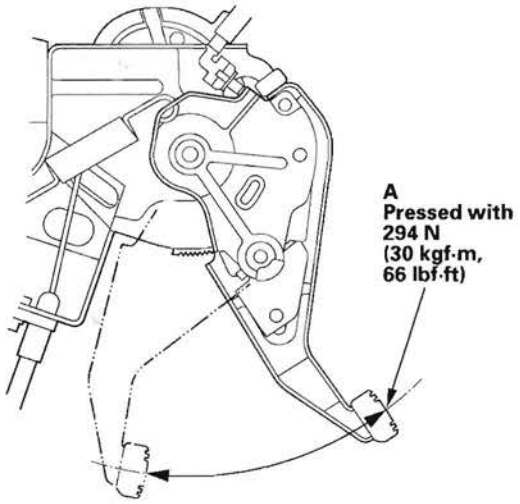

2. Adjust the parking brake if the pedal clicks are not within the specification.

   NOTE: Minor parking brake pedal adjustments (1 to 2 clicks) can be made with the adjusting nut. If a larger adjustment is required, follow the major adjustment procedure using the adjuster at the parking brake drum.
   After installing new parking brake shoes and/or new brake disc/drum, make sure you drive the vehicle for "break-in" (see page 19-32).

(cont'd)

Parking Brake Inspection and Adjustment (cont'd)

Minor Adjustment

1. Raise the rear of the vehicle, and support it with safety stands in the proper locations (see page 1-7).
2. Release the parking brake pedal fully.
3. Tighten the parking brake adjusting nut (A) until the parking brakes drag slightly when the rear wheels are turned.

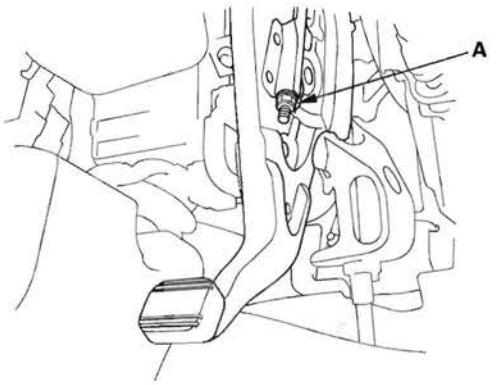

4. Back off the adjusting nut in half-turn increments.
5. Release the parking brake pedal fully, and check that the parking brakes do not drag when the rear wheels are turned. Readjust if necessary.
6. Make sure the parking brakes are fully applied when the parking brake pedal is pressed in all the way.

Major Adjustment (to be done when replacing parking brake shoes)

1. Raise the rear of the vehicle, and support it with safety stands in the proper locations (see page 1-7).
2. Release the parking brake pedal fully.
3. Back off the parking brake adjusting nut (A) in the parking brake pedal.

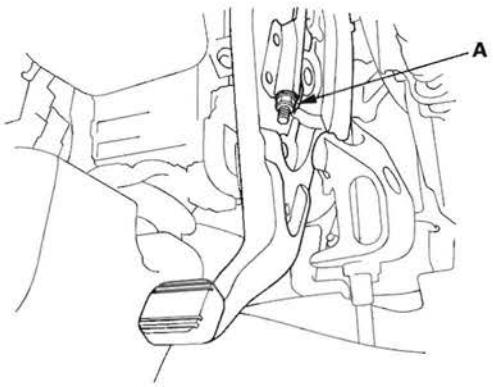

4. Remove the rear wheels.
5. Remove the access plug (A).

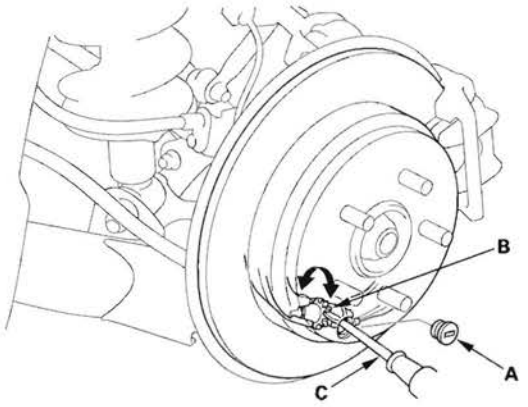

6. Turn the adjuster (B) with a flat-tip screwdriver (C) until the shoes lock against the parking brake drum. Then back off the adjuster 8 clicks, and install the access plug.
7. Clean the mating surface of the brake disc/drum and the inside of the wheel, then install the rear wheels.
8. Do the minor adjustment procedure.

Brake System Bleeding

NOTE:
- Do not reuse the drained fluid. Use only clean Honda DOT 3 Brake Fluid from an unopened container. Using a non-Honda brake fluid can cause corrosion and shorten the life of the system.
- Do not mix different brands of brake fluid; they may not be compatible.
- Make sure no dirt or other foreign matter is allowed to contaminate the brake fluid.
- Do not spill brake fluid on the vehicle, it may damage the paint; if brake fluid does contact the paint, wash it off immediately with water.
- The reservoir connected to the master cylinder must be at the MAX (upper) level mark at the start of the bleeding procedure and checked after bleeding each brake system. Add fluid as required.

1. Make sure the brake fluid level in the reservoir (A) is at the MAX (upper) level line (B).

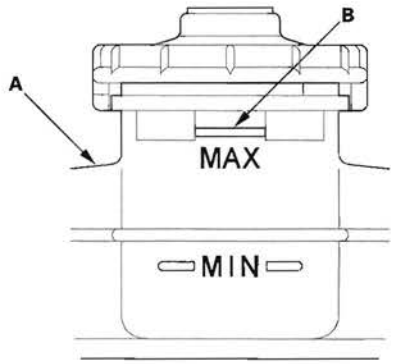

2. Have someone slowly pump the brake pedal several times, then apply steady pressure.

3. Start the bleeding at the driver's side of the front brake system.

   NOTE: Bleed the calipers or the wheel cylinders in the sequence shown.

BLEEDING SEQUENCE:

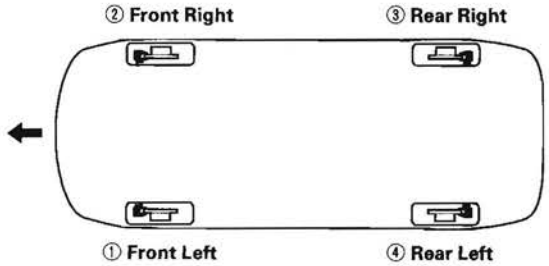

4. Attach a length of clear drain tube (A) to the bleed screw (B), then, loosen the bleed screw to allow air to escape from the system. Then tighten the bleed screw securely.

   NOTE: Do not loosen the special bolt (C) on the rear caliper.

Front

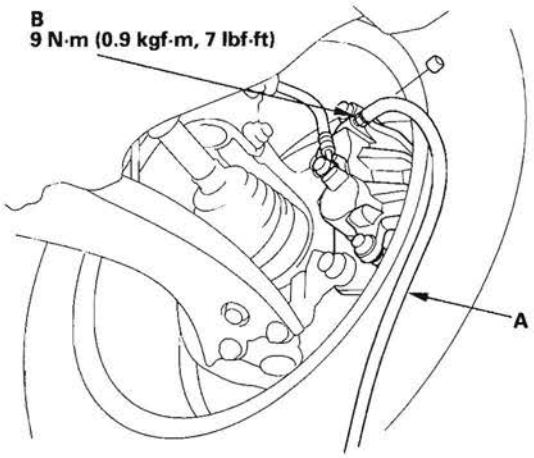

Rear

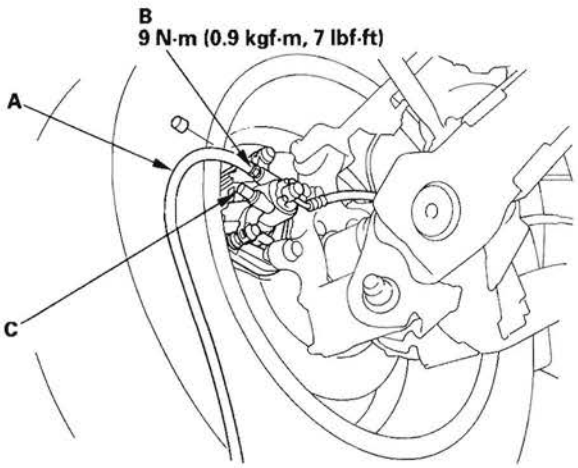

5. Refill the master cylinder reservoir to the MAX (upper) level line.

6. Repeat the procedure for each brake circuit until no air bubbles are in the fluid.

Brake System Indicator Circuit Diagram

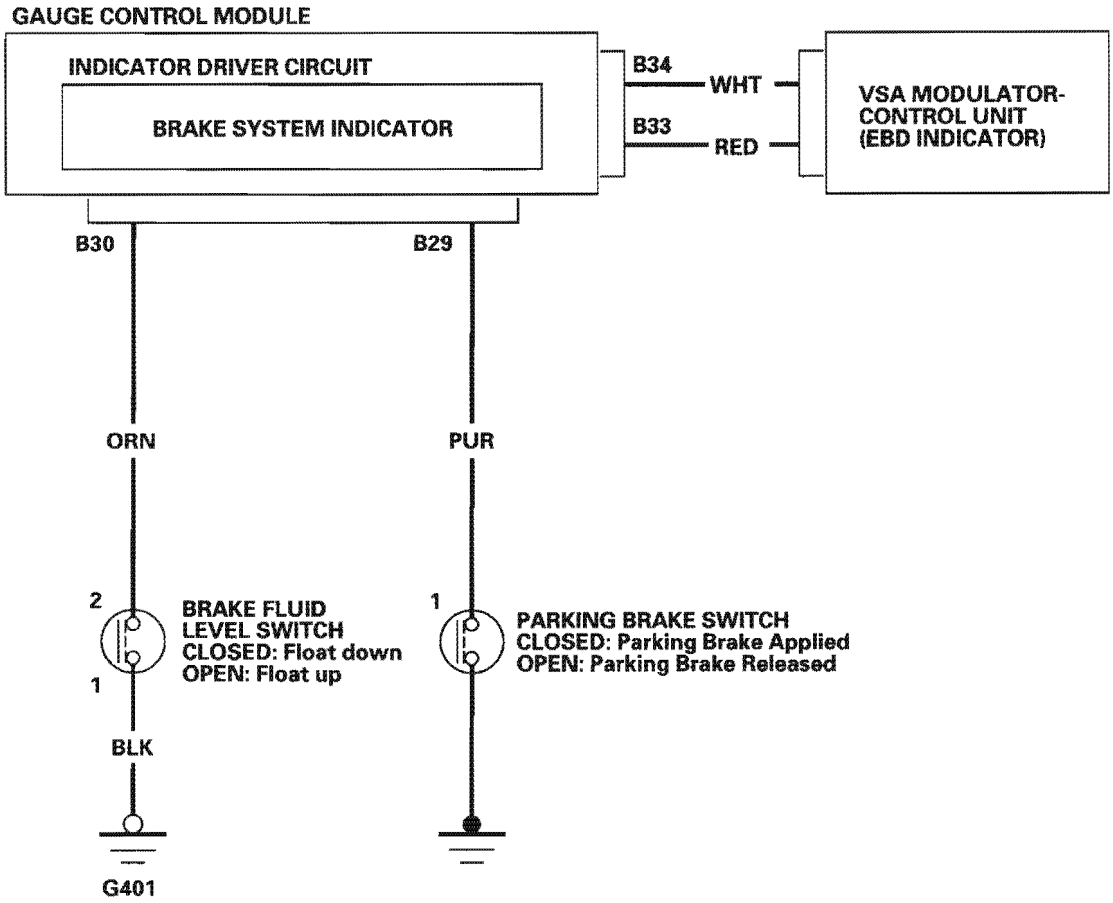

Parking Brake Switch Test

1. Disconnect the parking brake switch connector (A) from the parking brake switch (B).

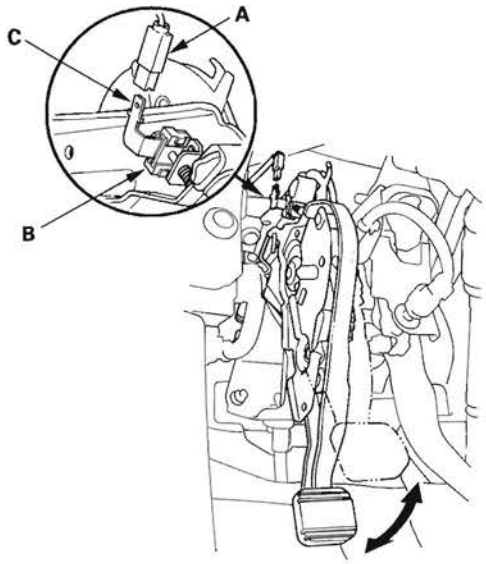

2. Check for continuity between the positive terminal (C) and body ground.

   - With the parking brake pedal pressed, there should be continuity.
   - With the parking brake pedal released, there should be no continuity.

   NOTE:
   - If both the ABS/VSA indicator and the brake system indicator come on at the same time, check the VSA system first (see page 19-41).
   - If the parking brake switch and fluid level switch are OK, but the brake system indicator does not function, check the VSA system (see page 19-41).

Brake Fluid Level Switch Test

Check for continuity between the terminals (1) and (2) with the float in the down position and in the up position.

NOTE:
- Remove the brake fluid completely from the reservoir. With the float down, there should be continuity.
- Fill the reservoir with brake fluid to the MAX (upper) level (A). With the float up, there should be no continuity.
- If both the ABS/VSA indicator and the brake system indicator come on at same time, check the VSA system first (see page 19-41).
- If the parking brake switch and fluid level switch are OK, but brake system indicator does not function, check the VSA system (see page 19-41).

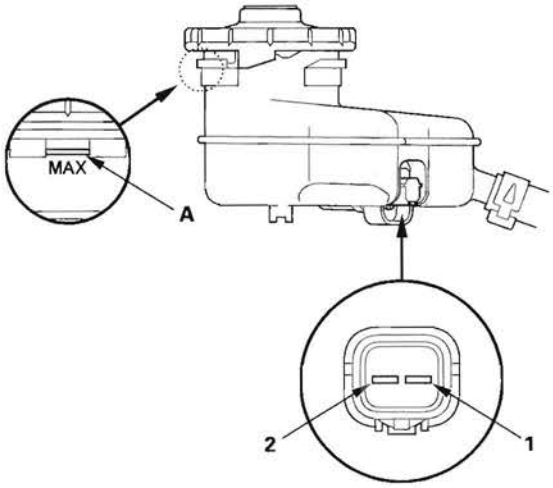

Front Brake Pad Inspection and Replacement

Special Tools Required
Brake caliper piston compressor 07AAE-SEPA101

⚠CAUTION

Frequent inhalation of brake pad dust, regardless of material composition, could be hazardous to your health.
- Avoid breathing dust particles.
- Never use an air hose or brush to clean brake assemblies. Use an OSHA-approved vacuum cleaner.

Inspection

1. Raise the front of the vehicle, and support it with safety stands in the proper locations (see page 1-7).
2. Remove the front wheels.
3. Check the thickness (A) of the inner pad (B) and outer pad (C). Do not include the thickness of the backing plate.

   Brake pad thickness:
   Standard: 11.5—12.2 mm (0.45—0.48 in.)
   Service limit: 1.6 mm (0.06 in.)

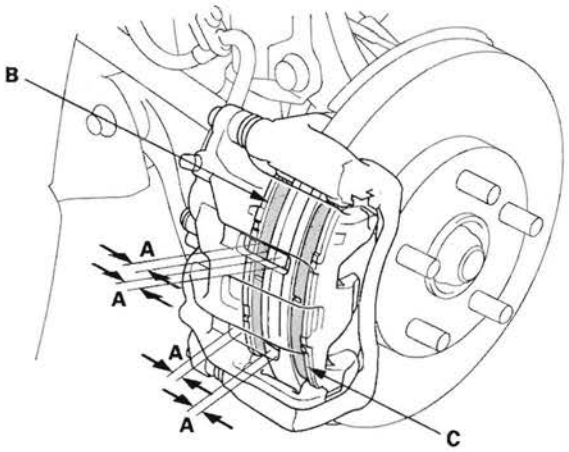

4. If the brake pad thickness is less than the service limit, replace all of the front brake pads as a set.
5. Clean the mating surface of the brake disc and the inside of the wheel, then install the front wheels.

Replacement

1. Remove some brake fluid from the master cylinder.
2. Raise the front of the vehicle, and support it with safety stands in the proper locations (see page 1-7).
3. Remove the front wheels.
4. Remove the flange bolt (A) while holding the caliper pin (B) with a wrench. Be careful not to damage the pin boot, and pivot the caliper (C) up out of the way. Check the hose and pin boots for damage and deterioration.

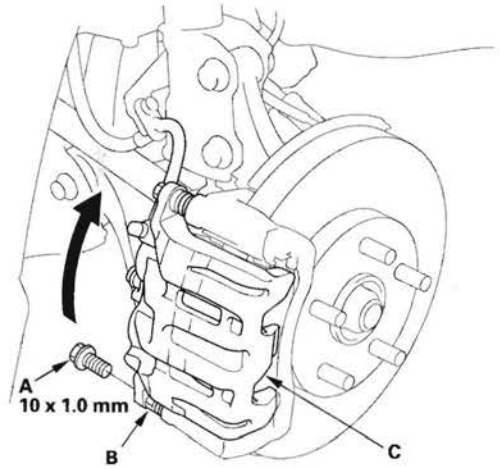

5. Remove the brake pads (A) and the pad shims (B).

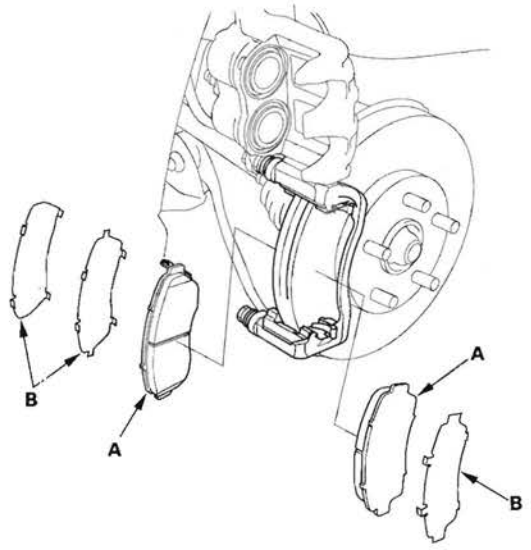

6. Remove the pad retainers (A).

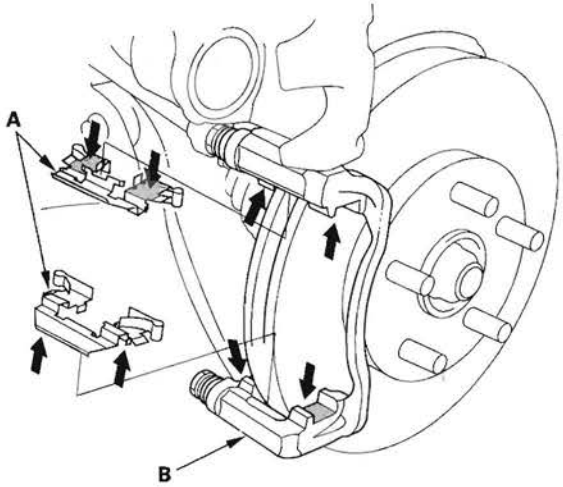

7. Clean the caliper bracket (B) thoroughly; remove any rust, and check for grooves and cracks.

8. Check the brake disc for damage and cracks.

9. Apply a thin coat of M-77 assembly paste (P/N 08798-9010) to the retainers on their mating surfaces (indicated by the arrows) against the caliper bracket.

10. Install the pad retainers. Wipe excess assembly paste off the retainers. Keep any assembly paste off the discs and pads.

11. Mount the brake caliper piston compressor (A) on the caliper body (B).

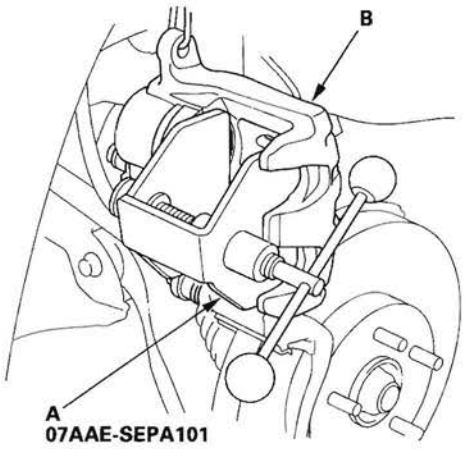

12. Press in the piston with the brake caliper piston compressor so the caliper will fit over the brake pads. Make sure the piston boot is in position to prevent damaging it when pivoting the caliper down.

    NOTE: Be careful when pressing in the piston; brake fluid might overflow from the master cylinder's reservoir. If brake fluid gets on any painted surface, wash it off immediately with water.

13. Remove the brake caliper piston compressor.

(cont'd)

Front Brake Pad Inspection and Replacement (cont'd)

14. Apply a thin coat of M-77 assembly paste (P/N 08798-9010) to the pad side of the shims (A), the back of the brake pads (B) and the other areas indicated by the arrows. Wipe excess assembly paste off the pad shims and brake pads. Contaminated brake discs or brake pads reduce stopping ability. Keep grease and assembly paste off the brake discs and brake pads.

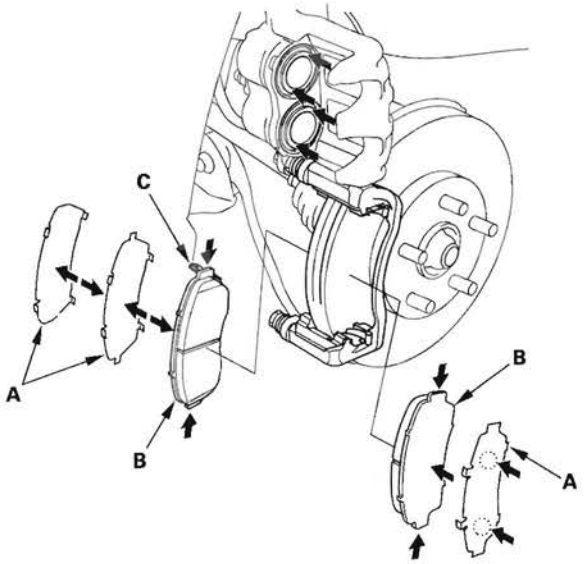

15. Install the brake pads and pad shims correctly. Install the brake pad with the wear indicator (C) on the upper inside. If you are reusing the brake pads, always reinstall the brake pads in their original positions to prevent a temporary loss of braking efficiency.

16. Pivot the caliper down into position. Install the flange bolt (A), and tighten it to the specified torque while holding the caliper pin (B) with a wrench. Be careful not to damage the pin boot.

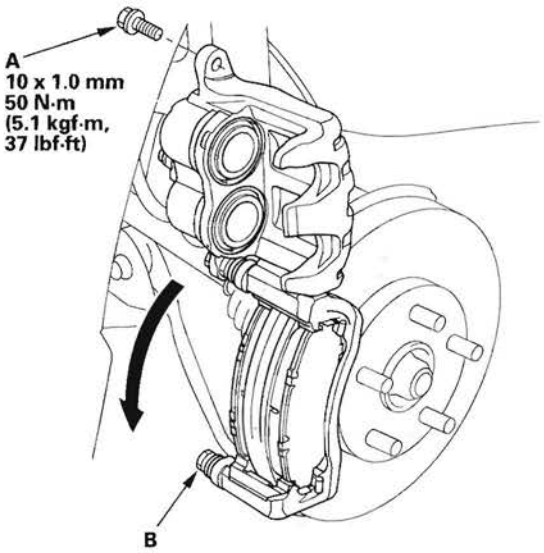

17. Clean the mating surface of the brake disc and the inside of the wheel, then install the front wheels.

18. Press the brake pedal several times to make sure the brakes work.

    NOTE: Engagement may require a greater pedal stroke immediately after the brake pads have been replaced as a set. Several applications of the brake pedal will restore the normal pedal stroke.

19. Add brake fluid as needed.

20. After installation, check for leaks at hose and line joints or connections, and retighten if necessary. Test-drive the vehicle, then check for leaks (see page 19-34).

Front Brake Disc Inspection

Runout

1. Raise the front of the vehicle, and support it with safety stands in the proper locations (see page 1-7).
2. Remove the front wheels.
3. Remove the brake pads (see page 19-12).
4. Inspect the brake disc surface for damage and cracks. Clean the brake disc thoroughly, and remove all rust.
5. Install suitable flat washers (A) and wheel nuts (B), and tighten the wheel nuts to the specified torque to hold the brake disc securely against the hub.

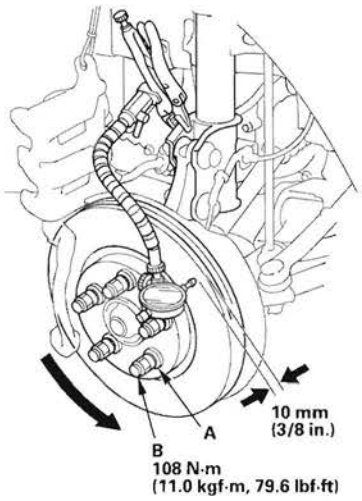

6. Set up the dial gauge against the brake disc as shown, and measure the runout at 10 mm (3/8 in.) from the outer edge of the brake disc.

   Brake disc runout:
   Service limit: 0.04 mm (0.0016 in.)

7. If the brake disc is beyond the service limit, refinish the brake disc with an on-car brake lathe. The Kwik-Lathe produced by Kwik-Way Manufacturing Co. and the "Front Brake Disc Lathe" offered by Snap-on Tools Co. are approved for this operation.

   Max. refinishing limit: 26.0 mm (1.02 in.)

   NOTE:
   - If the brake disc is beyond the service limit for refinishing, replace it (see page 18-12).
   - A new brake disc should be refinished if its runout is greater than 0.04 mm (0.0016 in.).

Thickness and Parallelism

1. Raise the front of the vehicle, and support it with safety stands in the proper locations (see page 1-7).
2. Remove the front wheels.
3. Remove the brake pads (see page 19-12).
4. Using a micrometer, measure the brake disc thickness at eight points, about 45 ° apart and 10 mm (3/8 in.) in from the outer edge of the brake disc. Replace the brake disc if the smallest measurement is less than the max. refinishing limit.

   Brake disc thickness:
   Standard: 27.8—28.1 mm (1.09—1.11 in.)
   Max. refinishing limit: 26.0 mm (1.02 in.)
   Brake disc parallelism: 0.015 mm (0.0006 in.) max.

   NOTE: This is the maximum allowable difference between the thickness measurements.

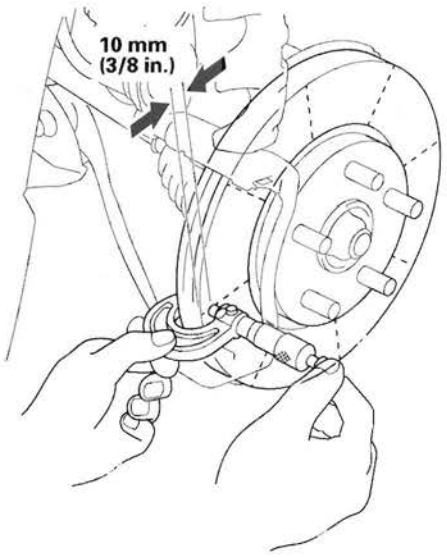

5. If the brake disc is beyond the service limit for parallelism, refinish the brake disc with an on-car brake lathe. The Kwik-Lathe produced by Kwik-Way Manufacturing Co. and the "Front Brake Disc Lathe" offered by Snap-on Tools Co. are approved for this operation.

   NOTE: If the brake disc is beyond the service limit for refinishing, replace it (see page 18-12).

Conventional Brake Components

Front Brake Caliper Overhaul

⚠CAUTION

Frequent inhalation of brake pad dust, regardless of material composition, could be hazardous to your health.
- Avoid breathing dust particles.
- Never use an air hose or brush to clean brake assemblies. Use an OSHA-approved vacuum cleaner.

Remove, disassemble, inspect, reassemble, and install the caliper, and note these items:

NOTE: Make sure that the caliper pins are installed correctly. Upper caliper pin B and lower caliper pin A are different. If the these caliper pins are installed in the wrong location, it will cause vibration, uneven or rapid brake pad wear, and possibly uneven wear.

- Do not spill brake fluid on the vehicle; it may damage the paint; if brake fluid gets on the paint, wash it off immediately with water.
- To prevent dripping brake fluid, cover disconnected hose joints with rags or shop towels.
- Clean all parts in brake fluid and air dry; blow out all passages with compressed air.
- Before reassembling, check that all parts are free of dirt and other foreign particles.
- Replace parts with new ones as specified in the illustration.
- Make sure no dirt or other foreign matter gets in the brake fluid.
- Make sure no grease or oil gets on the brake discs or pads.
- When reusing brake pads, always reinstall them in their original positions to prevent loss of braking efficiency.
- Do not reuse drained brake fluid. Use only clean Honda DOT 3 Brake Fluid from an unopened container. Using a non-Honda brake fluid can cause corrosion and shorten the life of the system.
- Do not mix different brands of brake fluid as they may not be compatible.
- Coat the pistons, piston seal grooves, and caliper bores with clean brake fluid.
- Replace all rubber parts with new ones whenever disassembled.
- After installing the caliper, check the brake hose and line for leaks, interference, and twisting.

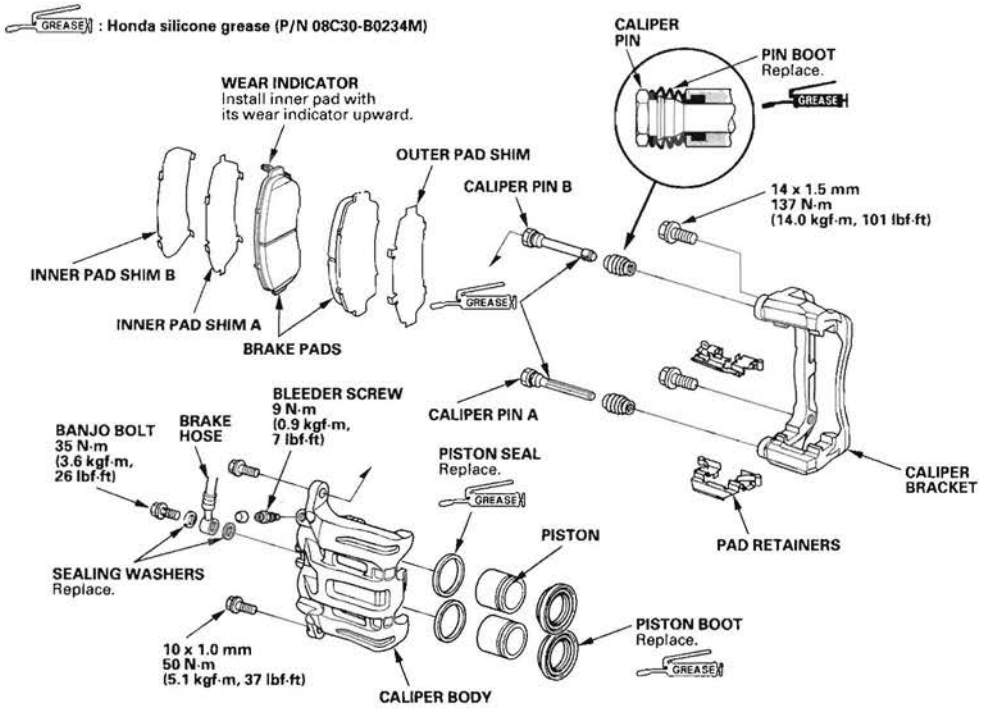

Master Cylinder Replacement

NOTICE

- Do not spill brake fluid on the vehicle; it may damage the paint; if brake fluid gets on the paint, wash it off immediately with water.
- Be careful not to damage or deform the brake lines during removal and installation.
- To prevent the brake fluid from flowing, plug and cover the hose ends and joints with a shop towel or equivalent.

1. Remove the air cleaner housing cover (see page 11-340).

2. Remove the reservoir cap, then remove brake fluid from the master cylinder reservoir with a syringe.

3. Disconnect the brake fluid level switch connector (A).

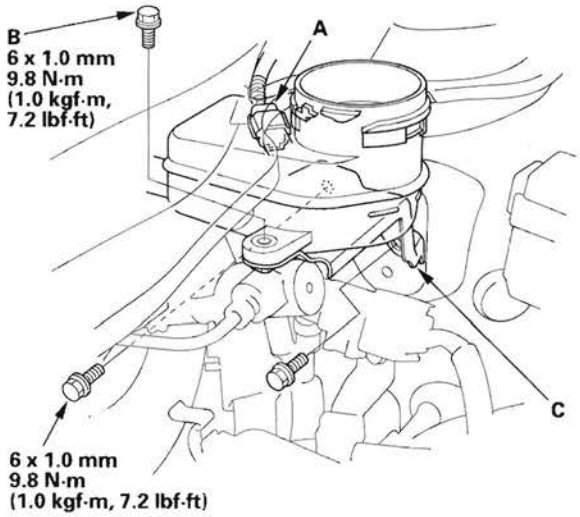

4. Remove the reservoir mounting bolt (B), then remove reservoir bracket (C).

5. Disconnect the brake lines (A) from the master cylinder (B). To prevent spills, cover the hose joints with rags or shop towels.

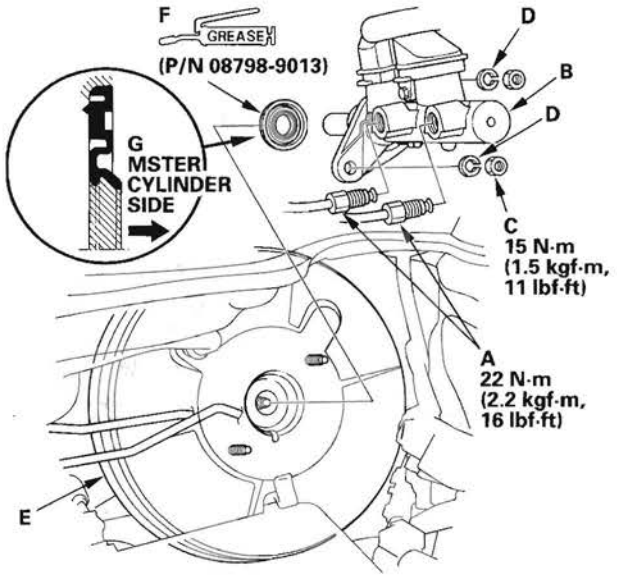

6. Remove the master cylinder mounting nuts (C) and washers (D).

7. Remove the master cylinder from the brake booster (E). Be careful not to bend or damage the brake lines when removing the master cylinder.

8. Remove the rod seal (F) from the master cylinder.

   NOTE: During installation, set the new rod seal onto the master cylinder with its grooved side (G) toward the master cylinder.

9. Install in the reverse order of removal, and note these items:

   - Coat the inner bore lip and outer circumference of the new rod seal with the Shin-Etsu silicone grease (P/N 08798-9013).
   - Check the brake pedal height and free play after installing the master cylinder, and adjust if necessary (see page 19-6).

10. Bleed the brake system (see page 19-9).

11. Spin the wheels to check for brake drag.

Master Cylinder Inspection

1. Inspect and note these items:

   - Before reassembling, check that all parts are free of dirt and other foreign particles.
   - Do not try to disassemble the master cylinder assembly. Replace the master cylinder assembly with a new part if necessary.
   - Do not allow dirt or foreign matter to contaminate the brake fluid.

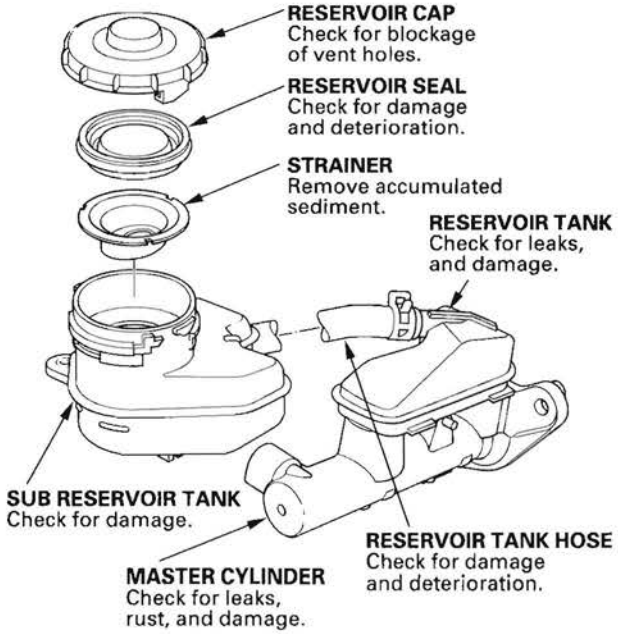

2. If the reservoir tank hose was disconnected, install the subreservoir tank (A) and the reservoir tank hose (B) to the reservoir tank (C).

   NOTE:
   - Align the raised arrows (D) on the subreservoir tank and reservoir tank with the paint marks (E) on the hose.
   - Position the direction of the clamps (F).

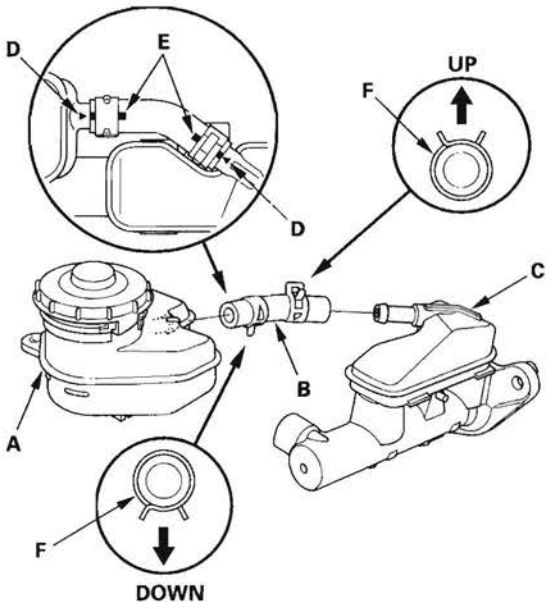

Brake Booster Test

Functional Test

1. With the engine stopped, press the brake pedal several times to deplete the vacuum reservoir, then press the brake pedal hard, and hold it for 15 seconds. If the brake pedal sinks, either the master cylinder is bypassing internally, or the brake system is leaking. Inspect the brake hoses and lines (see page 19-34).

2. Start the engine with the brake pedal pressed. If the brake pedal sinks slightly, the vacuum booster is operating normally. If the brake pedal height does not vary, do the brake system test (see page 19-4).

Leak Test

1. Press the brake pedal with the engine running, then stop the engine. If the brake pedal height does not vary while pressed for 30 seconds, the vacuum booster is OK. If the pedal height rises go to step 6. If it does not rise go to step 2.

2. Start the engine and let it idle for 30 seconds. Turn the ignition switch off, and wait 30 seconds. Press the brake pedal several times using normal pressure. When the pedal is first pressed, it should be low. On consecutive applications, the pedal height should gradually rise. Does the pedal rise on each consecutive application? If it rises the booster is OK. If it does not go to step 3.

3. Disconnect the brake booster vacuum hose (A) at the booster. The check valve is built into the hose.

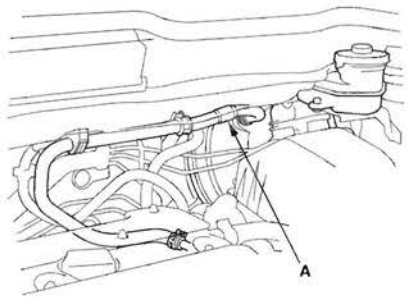

4. Start the engine, and let it idle. There should be vacuum available. If no vacuum is available, the check valve is not working properly. Replace the brake booster vacuum hose and check valve, and retest. If vacuum is found, go to step 5.

5. With the engine off, reconnect the vacuum hose to the brake booster.

6. Start the engine, and then pinch the brake booster vacuum hose between the check valve and the booster.

7. Turn the ignition switch off, and wait 30 seconds. Press the brake pedal several times using normal pressure. When the pedal is first pressed, it should be low. On consecutive applications, the pedal height should gradually rise.

   - If the pedal position does not vary inspect the seal between the master cylinder and booster. If the seal is OK, replace the brake booster.
   - If the pedal position varies, replace the brake booster vacuum hose/check valve assembly.

Brake Booster Replacement

1. Remove the air cleaner (see page 11-340).
2. Remove the master cylinder (see page 19-17).
3. Disconnect the vacuum hose (A) from the brake booster (B).

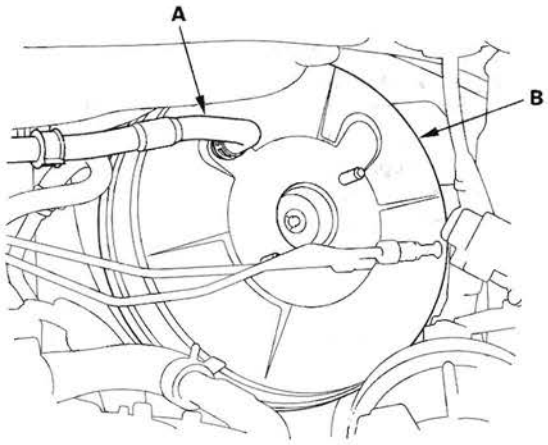

4. Remove the brake lines (A) from the clamp (B).

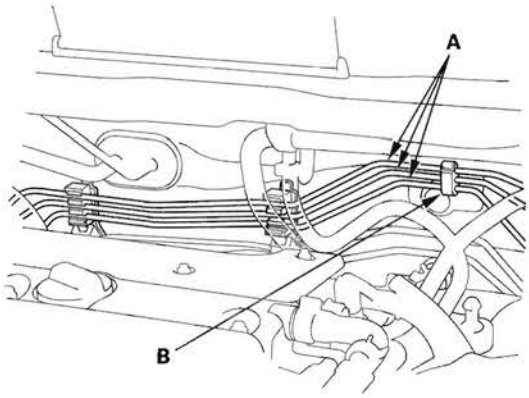

5. Remove the driver's dashboard undercover (see page 20-100).
6. Remove the lock pin (A) and the joint pin (B), then disconnect the yoke from the brake pedal.

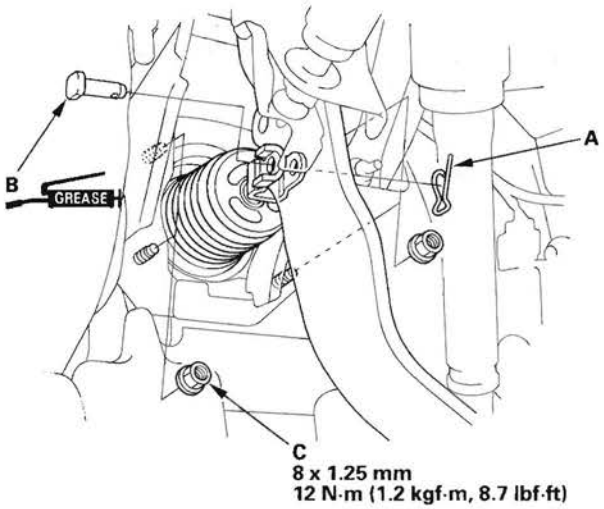

7. Remove the brake booster mounting nuts (C).

8. Pull the brake booster (A) forward, until it clears the cowl, then pull up on the bottom of the brake booster to turn it.

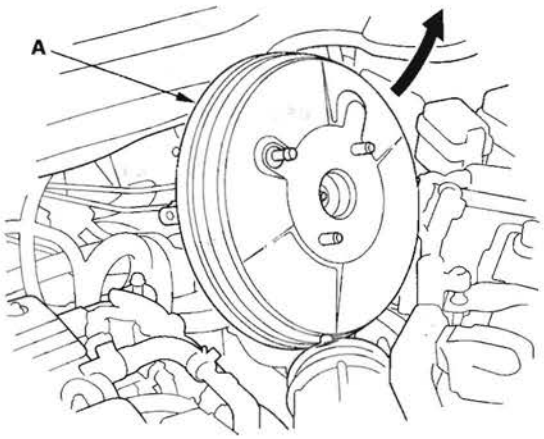

9. Remove the brake booster from the engine compartment.

NOTICE

- Be careful not to damage the booster surfaces and threads of the booster stud bolts.
- Be careful not to bend or damage the brake lines.

10. Install the brake booster in the reverse order of remove, and note these items:

- Tighten all mounting hardware to the specified torque values.
- Install the master cylinder after installing the brake booster (see page 19-17).
- Check the brake pedal height and free play after installing the master cylinder, and adjust it (see page 19-6).
- Bleed the brake system (see page 19-9).

Rear Brake Pad Inspection and Replacement

Special Tools Required
Brake caliper piston compressor 07AAE-SEPA101

⚠CAUTION

Frequent inhalation of brake pad dust, regardless of material composition, could be hazardous to your health.
- Avoid breathing dust particles.
- Never use an air hose or brush to clean brake assemblies. Use an OSHA-approved vacuum cleaner.

Inspection

1. Raise the rear of the vehicle, and support it with safety stands in the proper locations (see page 1-7).
2. Remove the rear wheels.
3. Check the thickness (A) of the inner pad (B) and outer pad (C). Do not include the thickness of the backing plate.

   Brake pad thickness:
   Standard: 8.3—9.0 mm (0.33—0.35 in.)
   Service limit: 1.6 mm (0.06 in.)

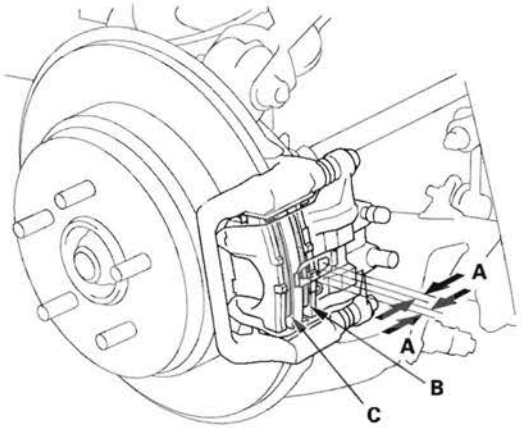

4. If the brake pad thickness is less than the service limit, replace all of the rear brake pads as a set.
5. Clean the mating surface of the brake disc/drum and the inside of the wheel, then install the rear wheels.

Replacement

1. Remove some brake fluid from the master cylinder.
2. Raise the rear of the vehicle, and support it with safety stands in the proper locations (see page 1-7).
3. Remove the rear wheels.
4. Remove the brake hose (A) from the brake hose bracket (B).

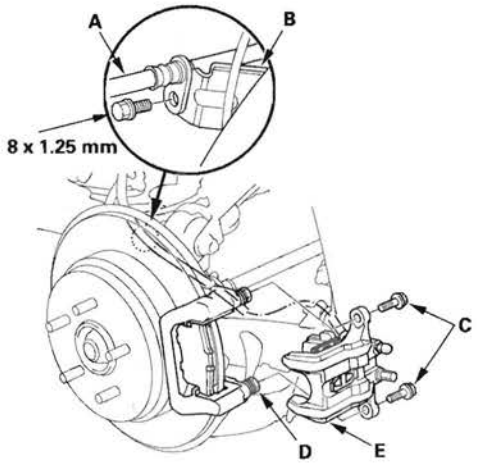

5. Remove the flange bolts (C) while holding the caliper pin (D) with a wrench. Be careful not to damage the pin boot, and remove the caliper (E). Check the hose and pin boots for damage and deterioration.
6. Remove the outer pad (A) and the pad shim (B).

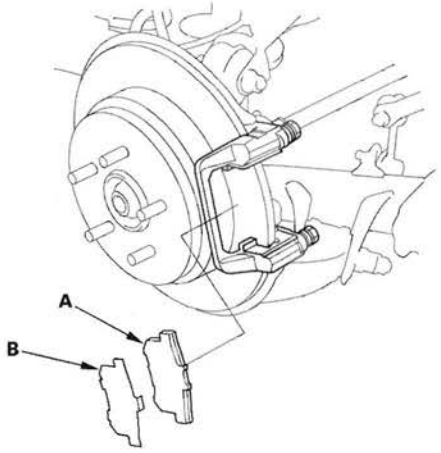

7. Remove the inner pad (A) from the caliper.

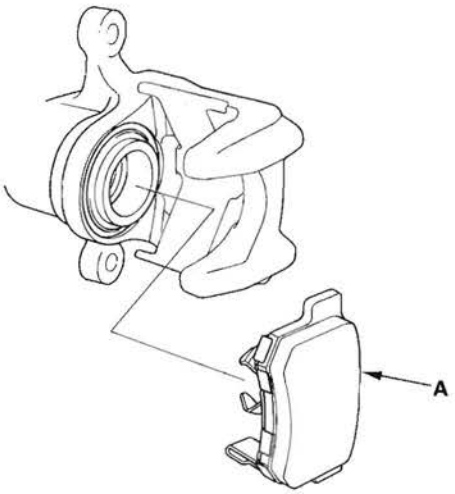

8. Remove the pad retainers (A).

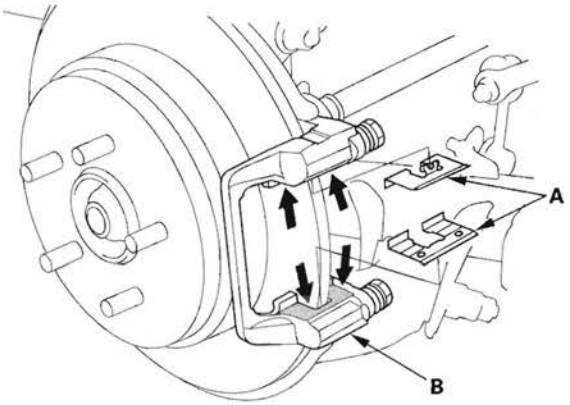

9. Clean the caliper bracket (B) thoroughly; remove any rust, and check for grooves and cracks.

10. Check the brake disc/drum for damage and cracks.

11. Apply a thin coat of M-77 assembly paste (P/N 08798-9010) to the retainers on their mating surfaces (indicated by the arrows) against the caliper bracket.

12. Install the pad retainers. Wipe excess assembly paste off the retainers. Keep any assembly paste off the brake discs and the brake pads.

13. Mount the brake caliper piston compressor (A) on the caliper body (B).

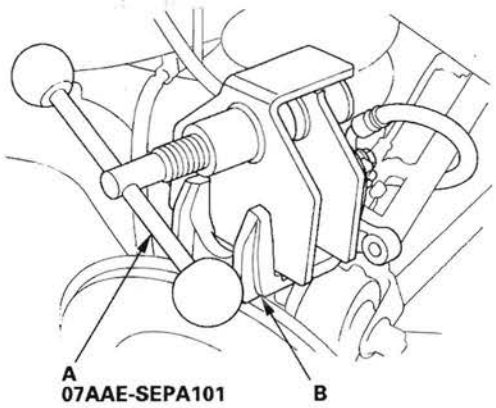

14. Press in the piston with the brake caliper piston compressor so the caliper will fit over the brake pads. Make sure the piston boot is in position to prevent damaging it when pivoting the caliper down.

    NOTE: Be careful when pressing in the piston; brake fluid might overflow from the master cylinder's reservoir. If brake fluid gets on any painted surface, wash it off immediately with water.

15. Remove the brake caliper piston compressor.

(cont'd)

Rear Brake Pad Inspection and Replacement (cont'd)

16. Apply a thin coat of M-77 assembly paste (P/N 08798-9010) to the pad side of the shims (A), the back of the brake pad (B), and the other areas indicated by the arrows. Wipe excess assembly paste off the pad shims and brake pads. Contaminated brake discs or brake pads reduce stopping ability. Keep grease and assembly paste off the brake discs and brake pads.

Inner pad

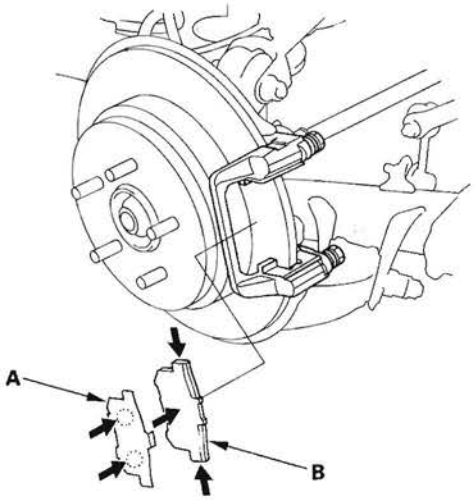

Outer pad

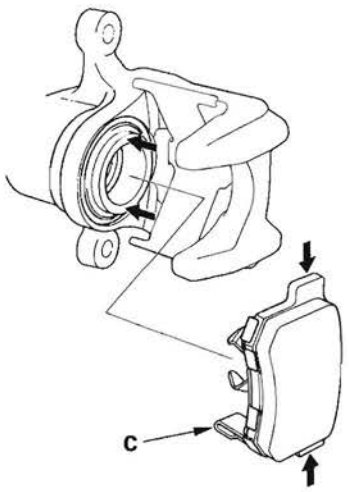

17. Install the brake pads and pad shims correctly. Install the brake pad with the wear indicator (C) on the bottom inside. If you are reusing the brake pads, always reinstall the brake pads in their original positions to prevent a momentary loss of braking efficiency.

18. Install the caliper into position. Install the flange bolts (A), and tighten it to the specified torque while holding the caliper pin (B) with a wrench. Be careful not to damage the pin boots.

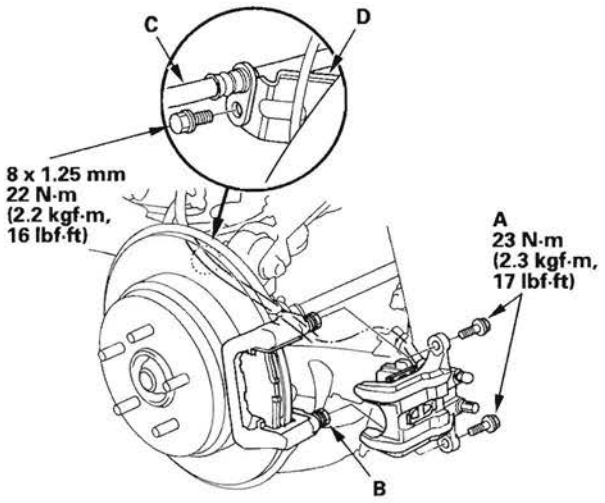

19. Install the brake hose (C) to the brake hose bracket (D).

20. Clean the mating surface of the brake disc/drum and the inside of the wheel, then install the rear wheels.

21. Press the brake pedal several times to make sure the brakes work.

    NOTE: Engagement may require a greater pedal stroke immediately after the brake pads have been replaced as a set. Several applications of the brake pedal will restore the normal pedal stroke.

22. Add brake fluid as needed.

23. After installation, check for leaks at hose and line joints or connections, and retighten if necessary. Test-drive the vehicle, then check for leaks (see page 19-34).

Rear Brake Disc Inspection

Runout

1. Raise the rear of the vehicle, and support it with safety stands in the proper locations (see page 1-7).
2. Remove the rear wheels.
3. Remove the brake pads (see page 19-22).
4. Inspect the brake disc/drum surface for damage and cracks. Clean the brake disc/drum thoroughly, and remove all rust.
5. Install suitable flat washers (A) and wheel nuts (B), and tighten the wheel nuts to the specified torque to hold the brake disc/drum securely against the hub.

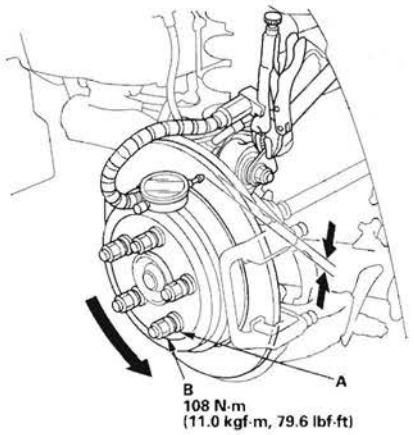

6. Set up the dial gauge against the brake disc/drum as shown, and measure the runout at 10 mm (3/8 in.) from the outer edge of the brake disc/drum.

   Brake disc/drum runout:
   Service limit: 0.04 mm (0.0016 in.)

7. If the brake disc/drum is beyond the service limit, refinish the brake disc/drum with an on-car brake lathe. The Kwik-Lathe produced by Kwik-Way Manufacturing Co. and the "Front Brake Disc Lathe" offered by Snap-on Tools Co. are approved for this operation.

   Max. refinishing limit: 7.5 mm (0.30 in.)

   NOTE:
   - If the brake disc/drum is beyond the service limit for refinishing, replace it (see page 18-32).
   - A new brake disc/drum should be refinished if its runout is greater than 0.04 mm (0.0016 in.).

Thickness and Parallelism

1. Raise the rear of the vehicle, and support it with safety stands in the proper locations (see page 1-7).
2. Remove the rear wheels.
3. Remove the brake pads (see page 19-22).
4. Using a micrometer, measure the brake disc/drum thickness at eight points, about 45 ° apart and 10 mm (3/8 in.) in from the outer edge of the brake disc/drum. Replace the brake disc/drum if the smallest measurement is less than the max. refinishing limit.

   Brake disc/drum thickness:
   Standard: 8.9—9.1 mm (0.35—0.36 in.)
   Max. refinishing limit: 7.5 mm (0.30 in.)
   Brake disc/drum
   parallelism: 0.015 mm (0.0006 in.) max.

   NOTE: This is the maximum allowable difference between the thickness measurements.

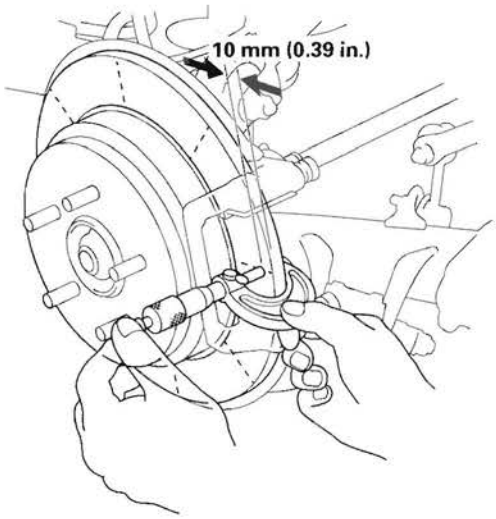

5. If the brake disc/drum is beyond the service limit for parallelism, refinish the brake disc/drum with an on-car brake lathe. The Kwik-Lathe produced by Kwik-Way Manufacturing Co. and the "Front Brake Disc Lathe" offered by Snap-on Tools Co. are approved for this operation.

   NOTE: If the brake disc/drum is beyond the service limit for refinishing, replace it (see page 18-32).

Rear Brake Caliper Overhaul

⚠CAUTION

Frequent inhalation of brake pad dust, regardless of material composition, could be hazardous to your health.
- Avoid breathing dust particles.
- Never use an air hose or brush to clean brake assemblies. Use an OSHA-approved vacuum cleaner.

Remove, disassemble, inspect, reassemble, and install the caliper, and note these items:

- Do not spill brake fluid on the vehicle; it may damage the paint; if brake fluid gets on the paint, wash it off immediately with water.
- To prevent dripping brake fluid, cover disconnected hose joints with rags or shop towels.
- Clean all parts in brake fluid and air dry; blow out all passages with compressed air.
- Before reassembling, check that all parts are free of dirt and other foreign particles.
- Replace parts with new ones as specified in the illustration.
- Make sure no dirt or other foreign matter gets in the brake fluid.
- Make sure no grease or oil gets on the brake discs or pads.
- When reusing brake pads, always reinstall them in their original positions to prevent loss of braking efficiency.
- Do not reuse drained brake fluid. Use only clean Honda DOT 3 Brake Fluid from an unopened container. Using a non-Honda brake fluid can cause corrosion and shorten the life of the system.
- Do not mix different brands of brake fluid as they may not be compatible.
- Coat the pistons, piston seal grooves, and caliper bores with clean brake fluid.
- Replace all rubber parts with new ones whenever disassembled.
- After installing the caliper, check the brake hose and line for leaks, interference, and twisting.

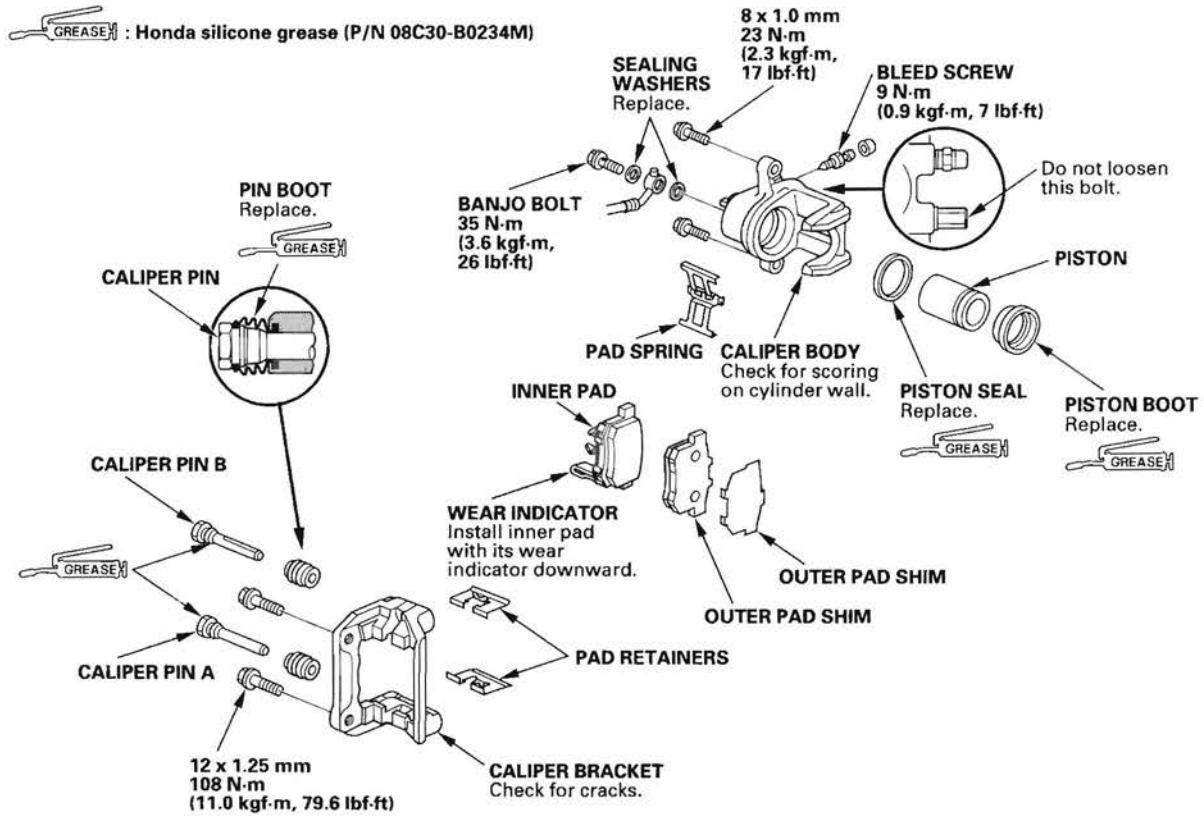

Parking Brake Inspection

⚠CAUTION

Frequent inhalation of brake pad dust, regardless of material composition, could be hazardous to your health.
- Avoid breathing dust particles.
- Never use an air hose or brush to clean brake assemblies. Use an OSHA-approved vacuum cleaner.

1. Raise the rear of the vehicle, and support it with safety stands in the proper locations (see page 1-7).
2. Remove the rear wheels.
3. Release the parking brake, and remove the rear brake disc/drum (see page 18-32).

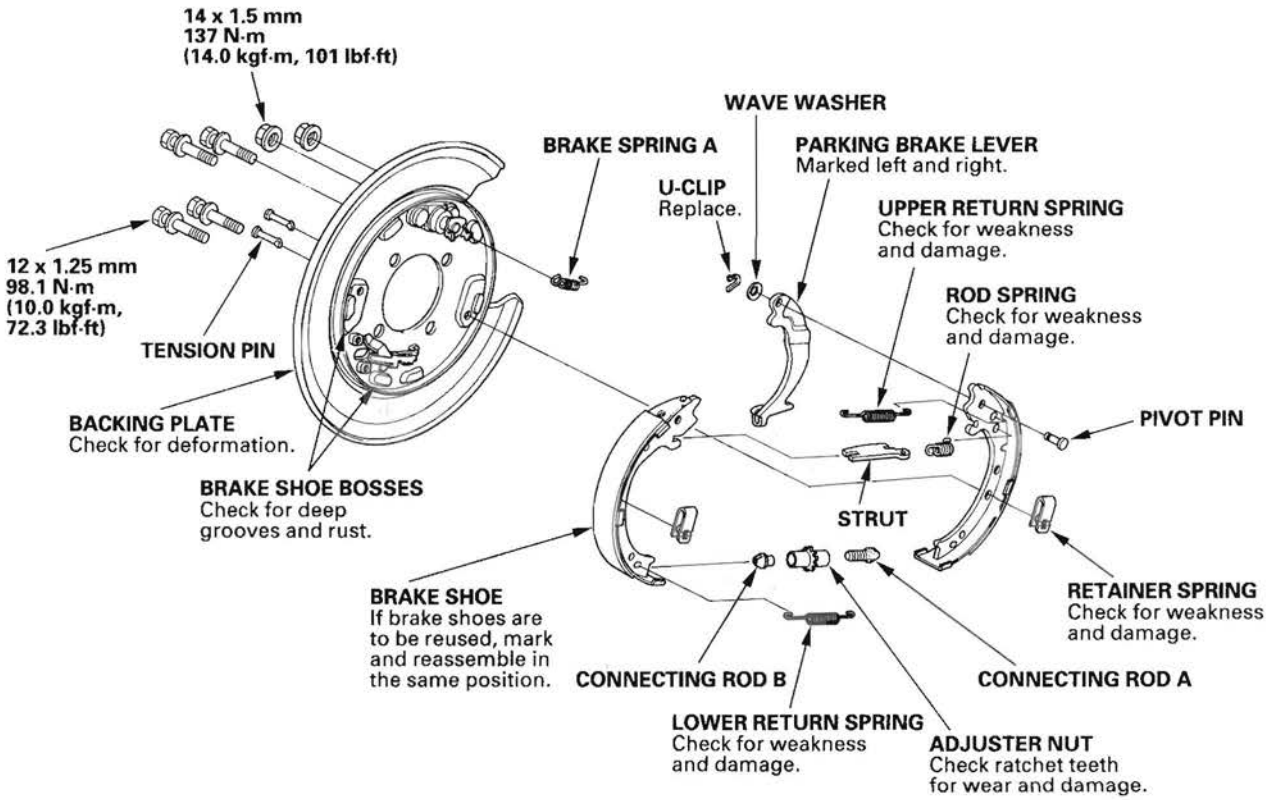

(cont'd)

Parking Brake Inspection (cont'd)

4. Check the parking brake linings (A) for cracking, glazing, wear, and contamination.

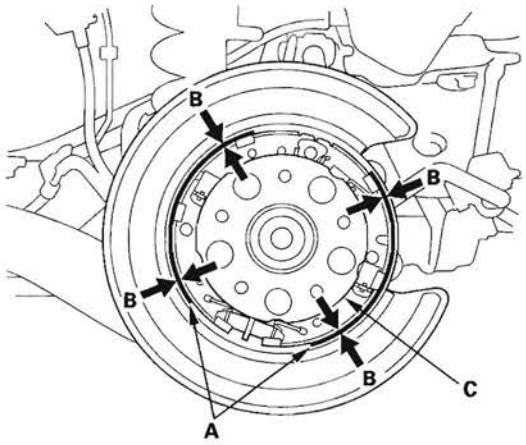

5. Measure the parking brake lining thickness (B). Measurement does not include brake shoe thickness.

Parking brake lining thickness:
Standard: 1.7—3.0 mm (0.067—0.118 in.)
Service limit: 1.0 mm (0.04 in.)

6. If the parking brake lining thickness is less than the service limit, replace all the parking brake shoes as a set.

7. Check the hub (C) for smooth operation. If it requires servicing replace the hub bearing unit (see page 18-32).

8. Measure the inside diameter of the parking brake drum with inside vernier calipers.

Parking brake drum inside diameter:
Standard: 199.9—200.0 mm (7.870—7.874 in.)
Service limit: 201.0 mm (7.913 in.)

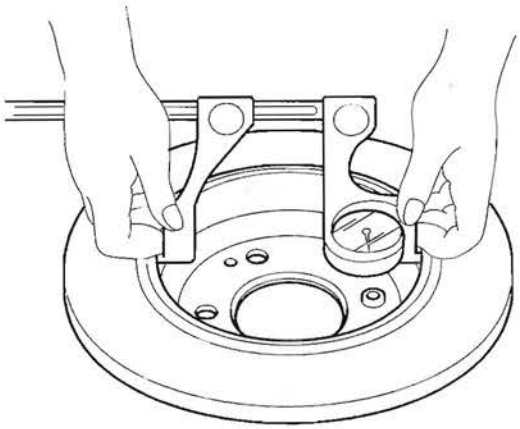

9. If the inside diameter of the parking brake drum is more than service limit, replace the brake disc/drum (see page 18-32).

10. Check the parking brake disc/drum for scoring, grooves, and cracks.

11. Clean the mating surface of the brake disc/drum and the inside of the wheel, then install the rear wheels.

Parking Brake Shoe Replacement

⚠CAUTION

Frequent inhalation of brake pad dust, regardless of material composition, could be hazardous to your health.
- Avoid breathing dust particles.
- Never use an air hose or brush to clean brake assemblies. Use an OSHA-approved vacuum cleaner.

Disassembly

1. Raise the rear of the vehicle, and support it with safety stands in the proper locations (see page 1-7).
2. Remove the rear wheels.
3. Release the parking brake, and remove the rear brake caliper and brake disc/drum (see page 18-32).
4. Disconnect and remove brake spring A and the upper return spring (B).

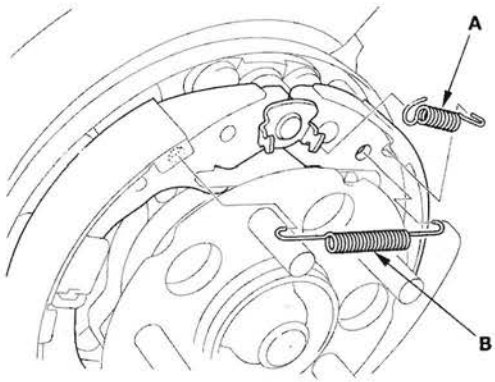

5. Disconnect and remove the lower return spring (A).

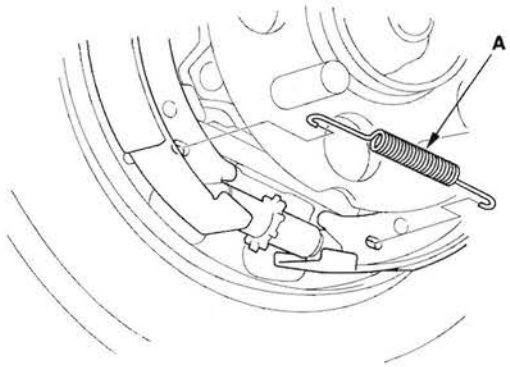

6. Remove the tension pins (A) by pushing the respective retainer springs (B) and turning the pin.

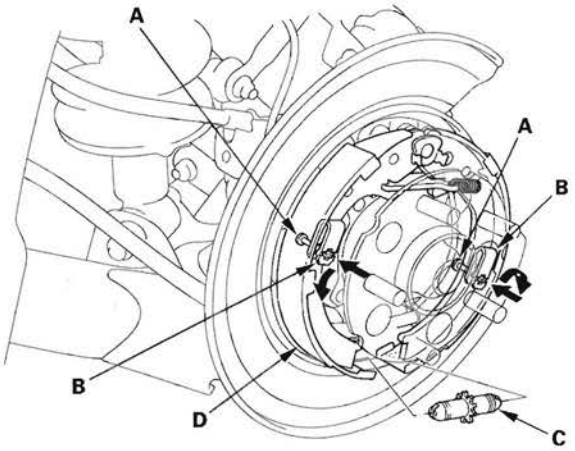

7. Remove the adjuster assembly (C) by moving forward brake shoe (D).
8. Remove the rearward brake shoe by disconnecting the parking brake cable (A) from the parking brake lever (B).

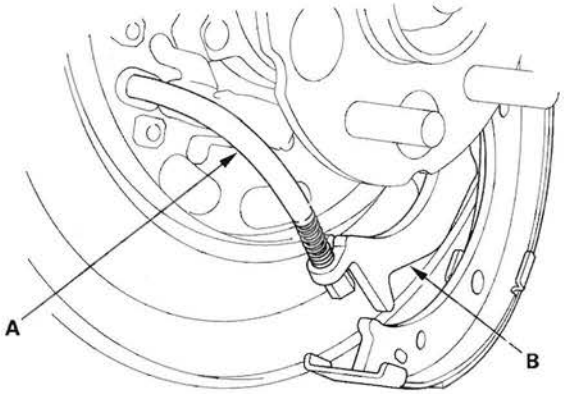

(cont'd)

Parking Brake Shoe Replacement (cont'd)

9. Disconnect the rod spring (A), and remove the strut (B).

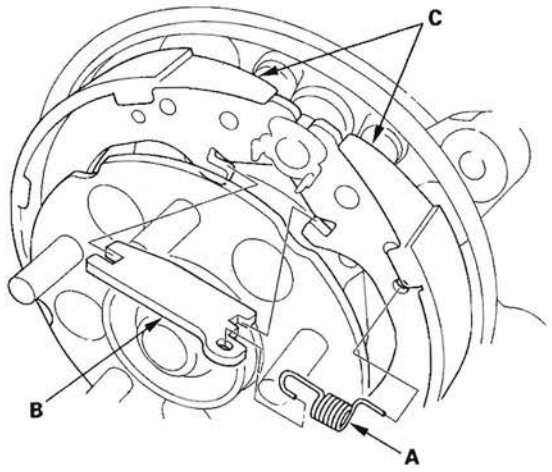

10. Remove the parking brake shoes (C).

11. Remove the U-clip (A), wave washer (B), parking brake lever (C), and pivot pin (D) from the brake shoe (E).

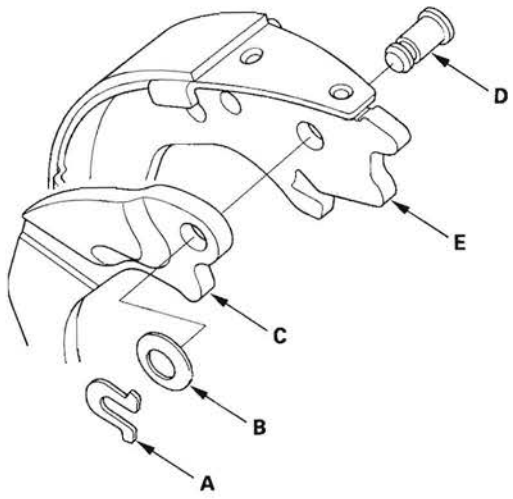

Reassembly

1. Apply Molykote 44MA grease to the sliding surface of the pivot pin (A), and insert the pin into the rearward brake shoe (B) from the outside.

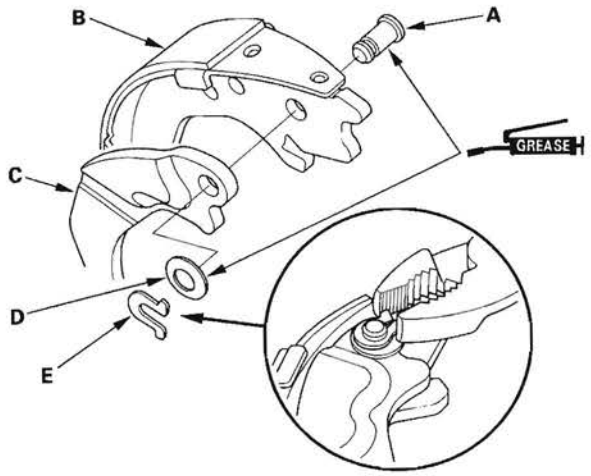

2. Install the parking brake lever (C) and wave washer (D) on the pivot pin, and secure with a new U-clip (E).

   - Install the wave washer with its convex side facing out.
   - Pinch the U-clip securely to prevent the parking brake lever from coming off the brake shoe.

3. Position the parking brake shoes (A), then hook the rod spring (B) on the strut (C) first with the spring end (D) pointing downward. Then hook the rod spring to the parking brake shoe, and install the strut on the parking brake shoes.

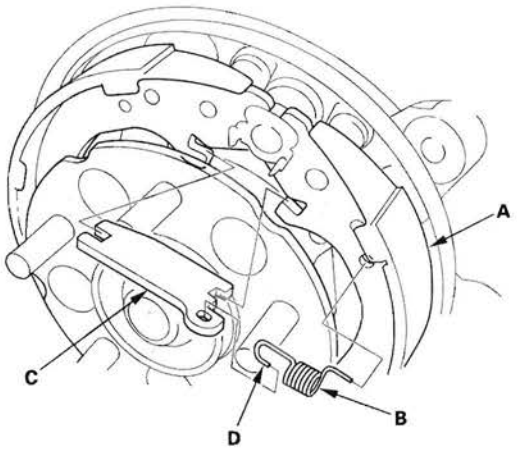

4. Apply a thin coat of Molykote 44MA grease to the brake shoe ends and strut ends (A), the sliding surfaces of the parking brake shoe (B), and the pivot of the parking brake lever (C) as shown. Wipe off any excess. Keep grease off the brake linings.

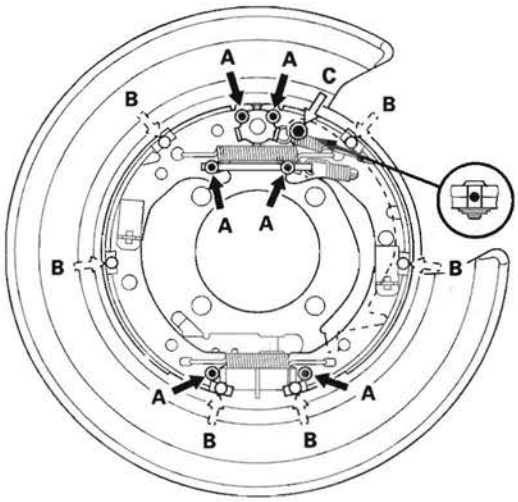

Greasing symbols:

- ➡◉ **Brake shoe ends and strut ends**
- ⬚○ **Sliding surface of the shoe**
- ⇨● **Pivot of parking brake lever**

5. Connect the parking brake cable (A) to the parking brake lever (B). Apply silicone grease to the cable contact surface (C) on the backing plate.

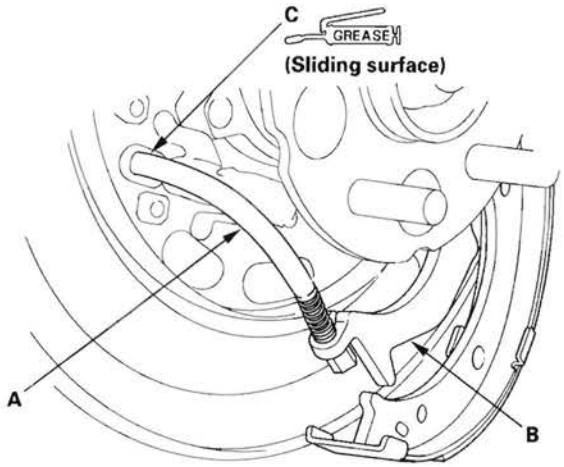

6. Install the tension pins (C) and retainer springs (D). Make sure the tension pin does not contact the parking brake lever.

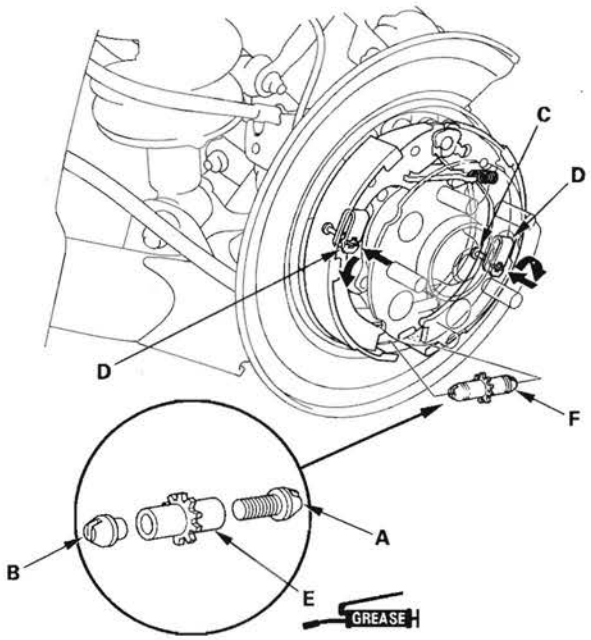

7. Install connecting rods A and B on the adjuster nut (E).

   NOTE:
   - Clean the threaded portions of connecting rod A and the sliding surface of connecting rod B, then coat them with rubber grease.
   - Shorten connecting rod A by fully turning the adjuster nut.

8. Position the brake shoe adjuster assembly (F) on the parking brake shoes.

(cont'd)

Parking Brake Shoe Replacement (cont'd)

9. Install the lower return spring (A).

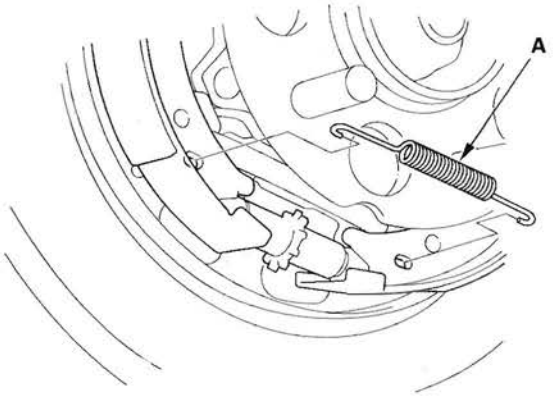

10. Install the upper return spring (B) and brake spring A.

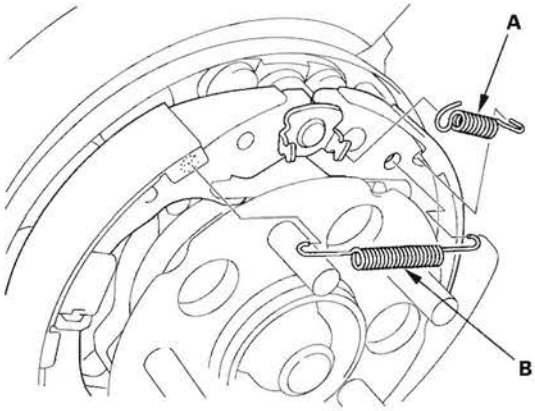

11. Install the rear brake disc/drum and rear brake caliper (see page 18-32).

12. Do the major parking brake adjustment (see page 19-8).

Parking Brake Shoe Lining Break-in

⚠ WARNING

Do this operation in a safe area.

NOTE:
- Do brake lining surface break-in when replacing shoes with new brake linings and/or new rear brake disc/drum.
- Check the number of parking brake lever clicks. Adjust the parking brake before lining surface break-in (see page 19-7).

1. Park the vehicle on a firm, level surface.
2. Release the parking brake pedal.
3. Press the parking brake pedal with 196 N·m (20 kgf, 44 lbf) (4 clicks) of force.
4. Drive the vehicle for 1/4 mile (400 m) at about 31 mph (50 km /h).
5. Stop the vehicle, and release the parking brake for 5—10 minutes to allow the brake disc/drum to cool.
6. Repeat steps 3 through 5 again.
7. Check the parking brake pedal adjustment (see page 19-7).

Brake Pedal Replacement

1. Remove the driver's dashboard undercover (see page 20-100).

2. Disconnect the brake pedal position switch connector (A).

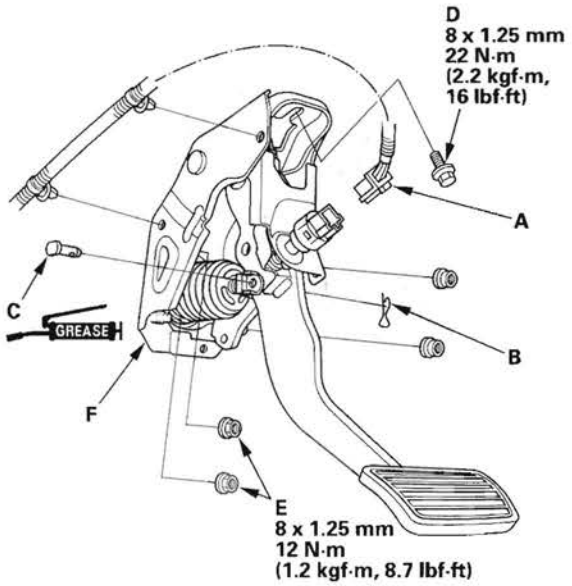

3. Remove the lock pin (B) and joint pin (C).

4. Remove the brake pedal bracket mounting bolt (D) and nuts (E).

5. Remove the brake pedal with bracket (F).

6. Install the brake pedal in the reverse order of removal.

7. Do the brake pedal and brake pedal position switch adjustment (see page 19-6).

Brake Hose and Line Inspection

1. Inspect the brake hoses for damage, deterioration, leaks, interference, and twisting.
2. Check the brake lines for damage, rusting, and leaks. Also check for bent brake lines.
3. Check for leaks at hose and line joints and connections, and retighten if necessary.
4. Check the master cylinder and the VSA modulator-control unit for damage and leaks.

Connection Point	Component	Connected to	Specified Torque Value	Note
A	Front brake caliper	Brake hose	35 N·m (3.6 kgf·m, 26 lbf·ft)	Banjo bolt
		Bleed screw	9 N·m (0.9 kgf·m, 7 lbf·ft)	
B	Rear brake caliper	Brake hose	35 N·m (3.6 kgf·m, 26 lbf·ft)	Banjo bolt
		Bleed screw	9 N·m (0.9 kgf·m, 7 lbf·ft)	
C	Brake hose	Brake line	15 N·m (1.5 kgf·m, 11 lbf·ft)	Flare nut
D	Master cylinder	Brake line	22 N·m (2.2 kgf·m, 16 lbf·ft)	Flare nut
E	VSA modulator-control unit	Brake line (12 mm nut)	22 N·m (2.2 kgf·m, 16 lbf·ft)	Flare nut
		Brake line (10 mm nut)	15 N·m (1.5 kgf·m, 11 lbf·ft)	Flare nut

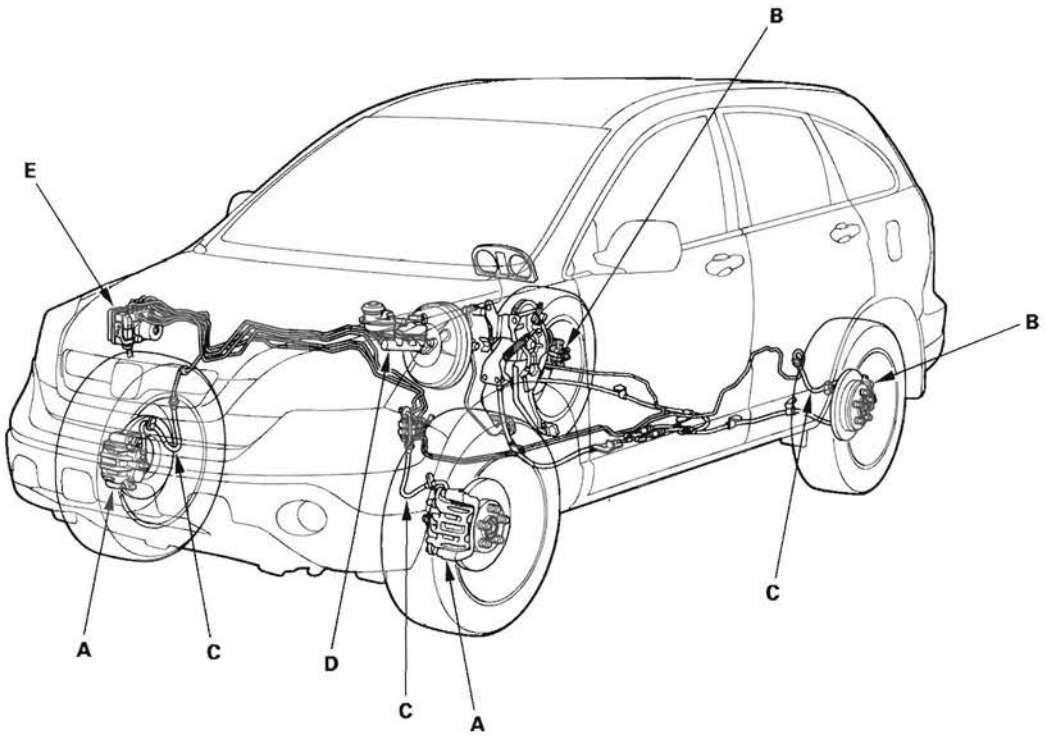

Brake Hose Replacement

NOTE:
- Before reassembling, check that all parts are free of dirt and other foreign particles.
- Replace parts with new ones whenever specified to do so.
- Do not spill brake fluid on the vehicle; it may damage the paint; if brake fluid gets on the paint, wash it off immediately with water.
- To prevent the brake fluid from flowing, plug and cover the hose ends and joints with a shop towel or equivalent material.

Removal-Front

1. Remove the front wheel.

2. Disconnect the brake line (A) from the brake hose (B), then remove the brake hose clip (C).

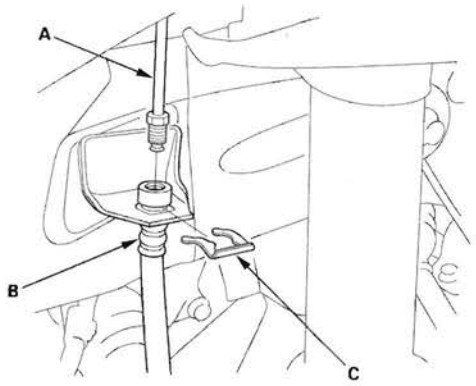

3. Remove the banjo bolt (A), and disconnect the brake hose (B) from the caliper.

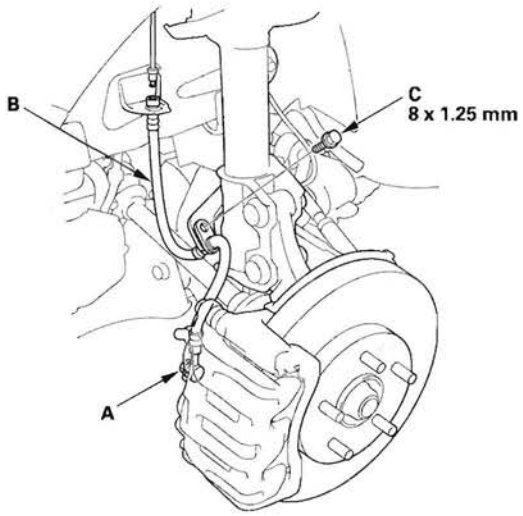

4. Remove the brake hose mounting bolt (C), then remove the brake hose.

Installation-Front

1. Install the brake hose (A) with the mounting bolt (B).

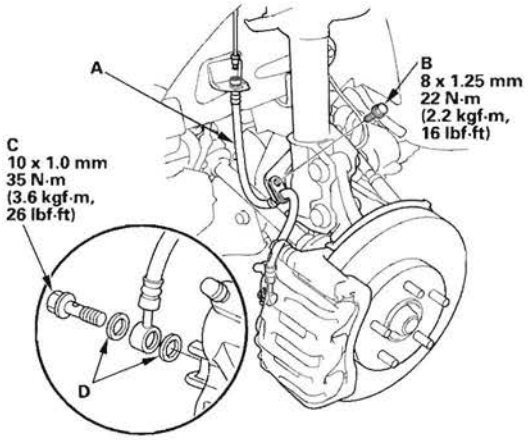

2. Connect the brake hose to the caliper with the banjo bolt (C) and new sealing washers (D).

3. Install a new brake hose clip (A) to the brake hose (B) on the bracket, then connect the brake line (C). Do not twist the brake hose.

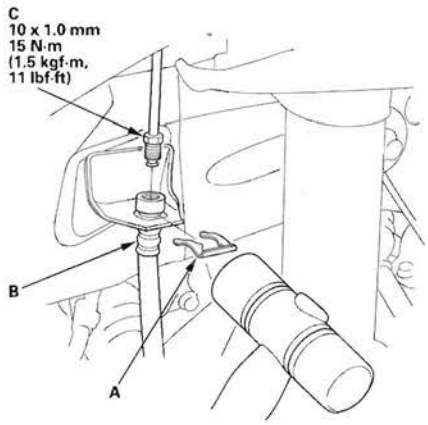

4. After installing the brake hose, bleed the brake system (see page 19-9).

5. Do these checks:

   - Check the brake hose and line joint for leaks and tighten if necessary.
   - Check the brake hoses for interference and twisting.

6. Clean the mating surface of the brake disc and the inside of the wheel, then install the front wheel.

(cont'd)

Brake Hose Replacement (cont'd)

Removal-Rear

1. Remove the rear wheel.
2. Disconnect the brake line (A) from the brake hose (B), then remove the brake hose clip (C).

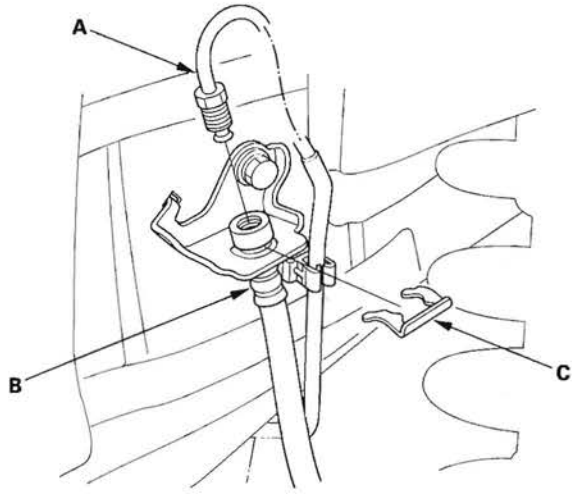

3. Remove the banjo bolt (A), and disconnect the brake hose (B) from the caliper.

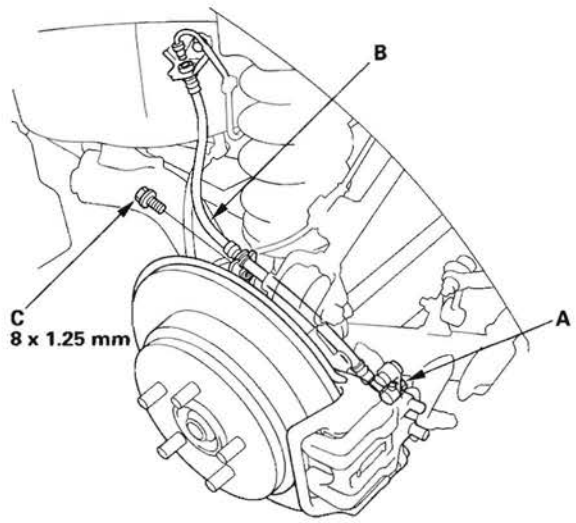

4. Remove the brake hose mounting bolt (C), then remove the brake hose.

Installation-Rear

1. Install the brake hose (A) with the mounting bolt (B).

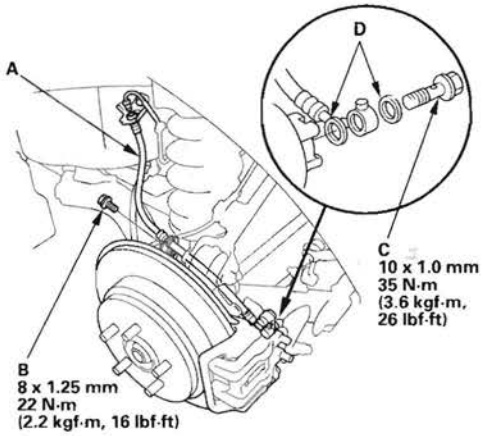

2. Connect the brake hose to the caliper with the banjo bolt (C) and new sealing washers (D).
3. Install a new brake hose clip (A) to the brake hose (B) on the bracket, then connect the brake line (C). Do not twist the brake hose.

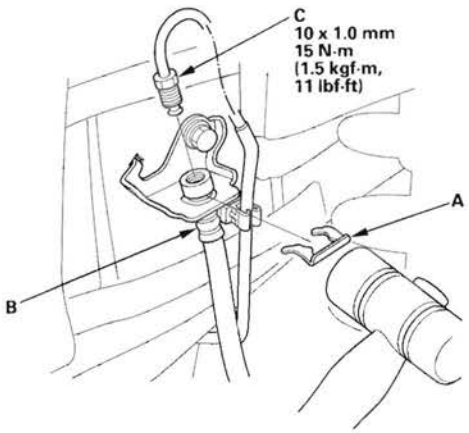

4. After installing the brake hose, bleed the brake system (see page 19-9).
5. Do these checks:
   - Check the brake hose and line joint for leaks and tighten if necessary.
   - Check the brake hoses for interference and twisting.
6. Clean the mating surface of the brake disc/drum and the inside of the wheel, then install the rear wheel.

Parking Brake Cable Replacement

Exploded View

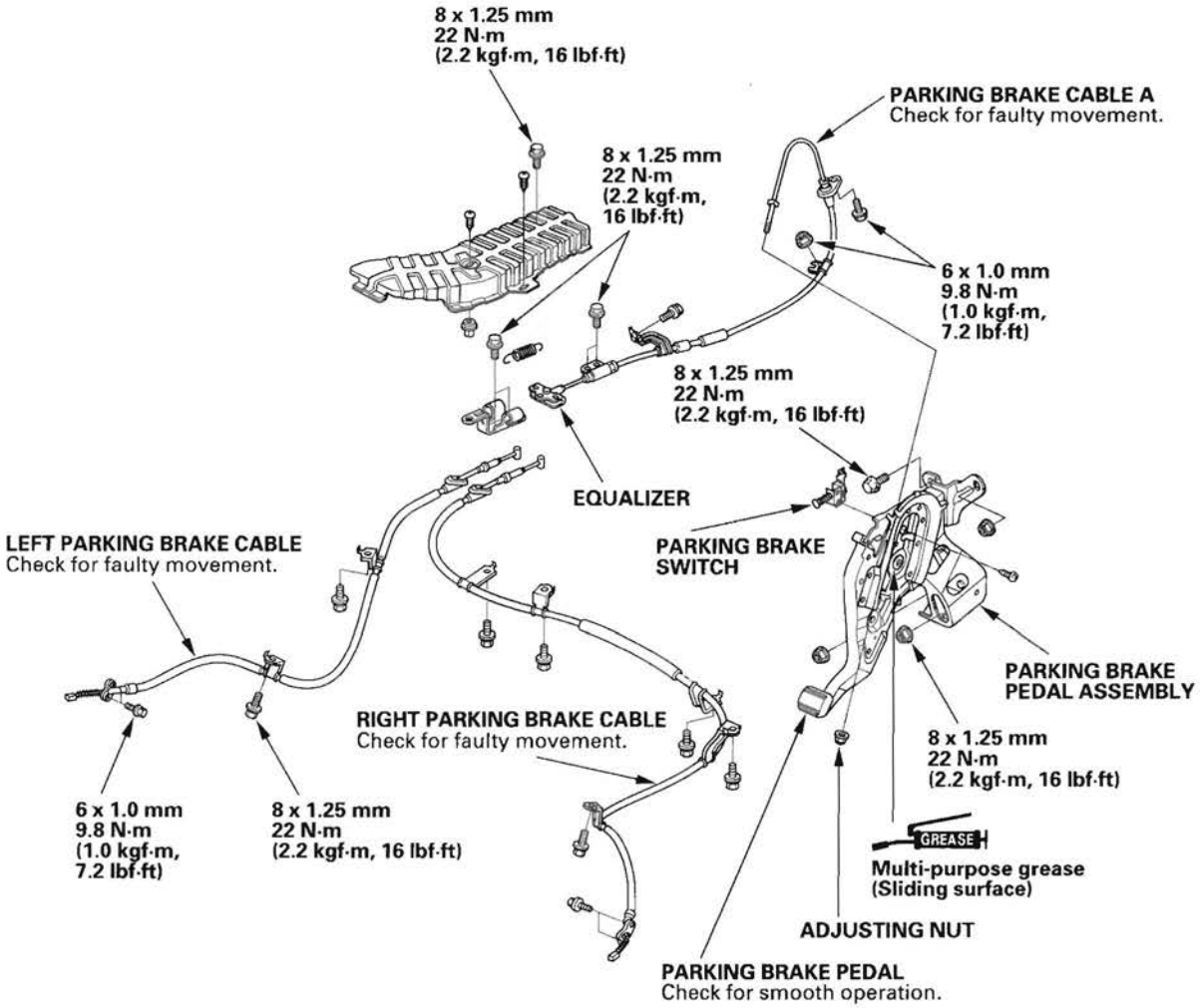

(cont'd)

Parking Brake Cable Replacement (cont'd)

NOTE:
- The parking brake cable must not be bent or distorted. This will lead to stiff operation and premature cable failure.
- Refer to the Exploded View as needed during this procedure.

1. Loosen the parking brake cable adjusting nut (see page 19-8).

2. Remove the parking brake shoes, and disconnect the parking brake cable from the parking brake lever (see page 19-29).

3. Remove the parking brake cable mounting bolts from the backing plate (A), and remove the parking brake cable (B).

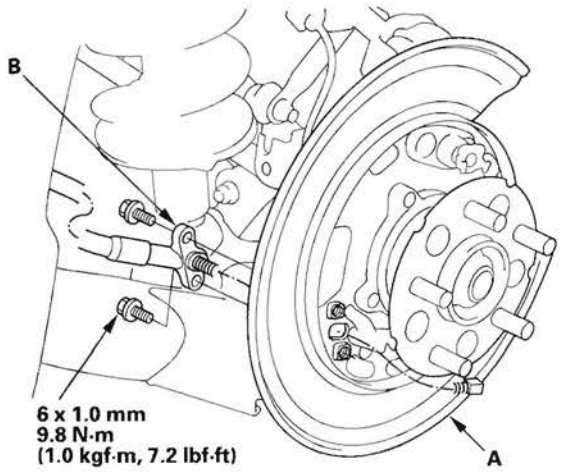

4. Pull the parking brake cable, and remove it from the backing plate.

5. Reinstall the parking brake cable in the reverse order of removal, and note these items:

   - Be careful not to bend or distort the cable.
   - Connect the parking brake cable to the brake lever, and install the brake shoes and disc/drum (see page 19-30).
   - Do the parking brake adjustment (see page 19-7). Apply the parking brake firmly 10 times then adjust it again.

Brakes

Conventional Brake Components 19-1

VSA (Vehicle Stability Assist) System Components

Component Location Index 19-40
General Troubleshooting Information 19-41
DTC Troubleshooting Index 19-44
Symptom Troubleshooting Index 19-46
System Description 19-47
Circuit Diagram 19-56
DTC Troubleshooting 19-59
Symptom Troubleshooting 19-91
Steering Angle Sensor Replacement 19-94
Yaw Rate-Lateral Acceleration Sensor Replacement 19-95
VSA Off Switch Test 19-96
VSA Modulator-Control Unit Removal and Installation 19-97
Wheel Sensor Replacement 19-99

VSA System Components

Component Location Index

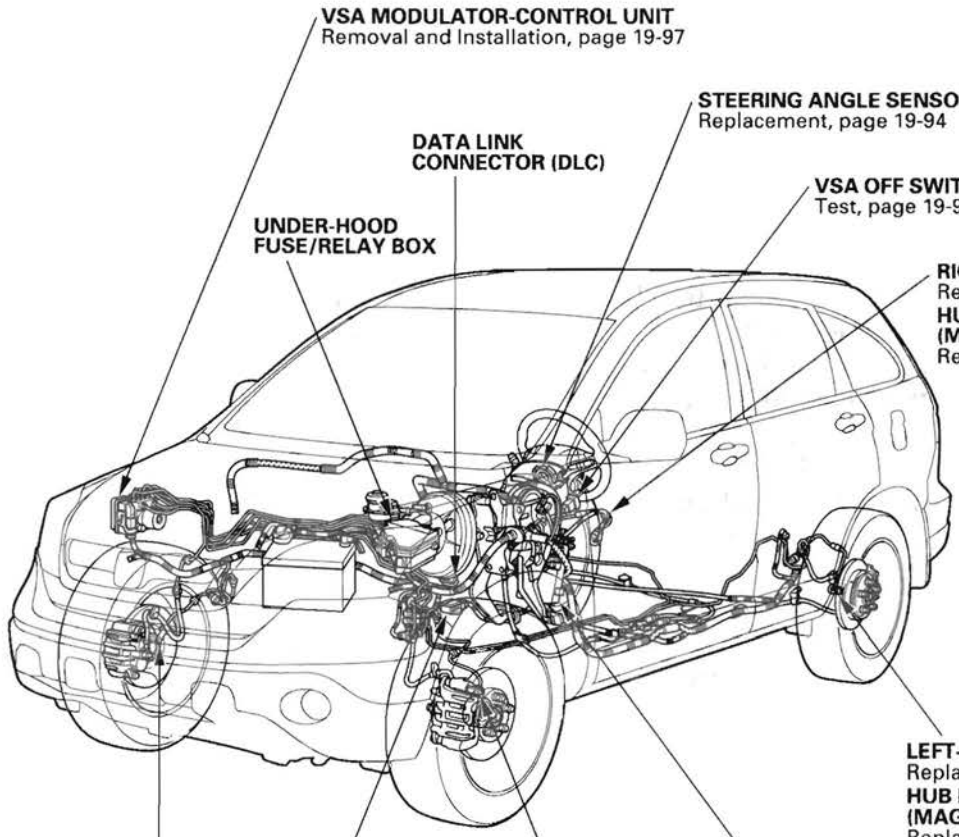

General Troubleshooting Information

System Indicator

This system has four indicators:

- ABS indicator (A)
- Brake system indicator (B)
- VSA indicator (C)
- VSA activation indicator (D)

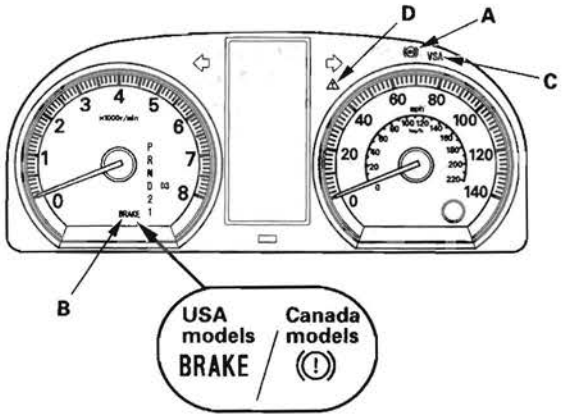

When the system detects a problem, it will turn the appropriate indicators on. Depending on the failure, the VSA modulator-control unit determines which indicators are turned on.
When the system is OK, each indicator comes on for about 2 seconds after turning the ignition switch ON (II), then goes off.

ABS Indicator

The ABS indicator comes on when the ABS function is lost. The brakes still work like a conventional system.

Brake System Indicator

The brake system indicator comes on when the EBD function is lost, the parking brake is applied, and/or the brake fluid level is low.

VSA Indicator

The VSA indicator comes on, when the VSA function is lost.

VSA Activation Indicator

The VSA activation indicator blinks, when the VSA function is activating. The VSA activation indicator comes on, when the VSA is turned OFF by using the VSA OFF switch, or the VSA function is lost.

ABS and VSA Indicators Go Off

Each indicator will go off after a problem goes away, but the timing which the VSA modulator-control unit turns off the indicators varies between DTCs.

- DTC 61 or 62:
  The indicators go off automatically when the system returns to normal.
- DTC 11, 13, 15, 17, 25, 26, 27*, 31, 32, 33, 34, 35, 36, 37, 38, 54, 64, 66, 68, 81, 83, 86, 87, 88, 91**, 113, 114, 121, 122, 123, 124, 131*, 132, 133, 134, 137, or 138:
  The indicators stay on until the ignition switch is turned OFF whether or not the system returns to normal.
  *: There are some cases that the indicators stay on until the vehicle is driven after the system returns to normal.
  **: There are some cases that the indicators go off automatically when the system returns to normal.
- DTC 12, 14, 16, 18, 51, 52, or 53:
  The indicators stay on until the vehicle is driven after the system returns to normal.

(cont'd)

General Troubleshooting Information (cont'd)

Diagnostic Trouble Code (DTC)

- The memory can hold 10 DTCs. However, when the same DTC is detected more than once, the more recent DTC is written over the earlier one. Therefore, when the same problem is detected repeatedly, it is memorized as a single DTC.
- The DTCs are indicated in the order they occur.
- The DTCs are memorized in the EEPROM. Therefore, the memorized DTCs cannot be canceled by disconnecting the battery. Do the specified procedures to clear the DTCs.

Self-diagnosis

- Self-diagnosis can be classified into two categories:
  - Initial diagnosis: Done right after the ignition switch is turned ON (II) and until the ABS and VSA indicators go off.
  - Regular diagnosis: Done right after the initial diagnosis until the ignition switch is turned OFF.
- When the system detects a problem, the VSA modulator-control unit shifts to fail-safe mode.

Kickback

The pump motor operates when the VSA modulator-control unit is functioning, and the fluid in the reservoir is forced out to the master cylinder, causing kickback at the brake pedal.

Pump Motor

- The pump motor operates when the VSA modulator-control unit is functioning.
- The VSA modulator-control unit checks the pump motor operation during regular diagnosis when the vehicle is driven over 10 mph (15 km/h) the first time after the ignition switch is turned ON (II). You may hear the motor operate at this time, but it is normal.

Brake Fluid Replacement/Air Bleeding

Brake fluid replacement and air bleeding procedures are identical to the procedures used on vehicles without the VSA system (see page 19-9).

How to Troubleshoot DTCs

The troubleshooting procedures assume that the cause of the problem is still present and the ABS and/or VSA indicator is still on. Following a troubleshooting procedure for a code that has been cleared and does not reset can result in incorrect diagnosis.

1. Question the customer about the conditions when the problem occurred, and try to reproduce the same conditions for troubleshooting. Find out when the ABS and/or VSA indicator came on, such as during control, after control, when the vehicle was traveling at a certain speed, etc. If necessary, have the customer demonstrate the concern.

2. When the ABS or VSA indicator does not come on during the test-drive, but troubleshooting is done based on the DTC, check for loose connectors, poor contact of the terminals, etc. before you start troubleshooting.

3. After troubleshooting, or repairs are done, clear the DTCs, and test-drive the vehicle under the same conditions that originally set the DTCs. Make sure the ABS and VSA indicators do not come on.

4. Check for DTCs from other control unit which connected via F-CAN. If there are DTCs that are related to F-CAN, the most likely cause was that the ignition switch was turned ON (II) with the VSA modulator-control unit connector disconnected. Clear the DTCs. Check for PGM-FI and VSA codes, and troubleshoot those first.

Intermittent Failures

The term "intermittent failure" means a system may have had a failure, but it checks OK now. If the indicator(s) of the system does not come on, check for loose connectors and grounds, poor contact of the terminals related to the circuit that you are troubleshooting. If the indicators were on but then went out, the original problem may have been intermittent.

How to Use the HDS (Honda Diagnostic System)

1. If the system indicators stay on, connect the HDS to the data link connector (DLC) (A) located under the driver's side of the dashboard.

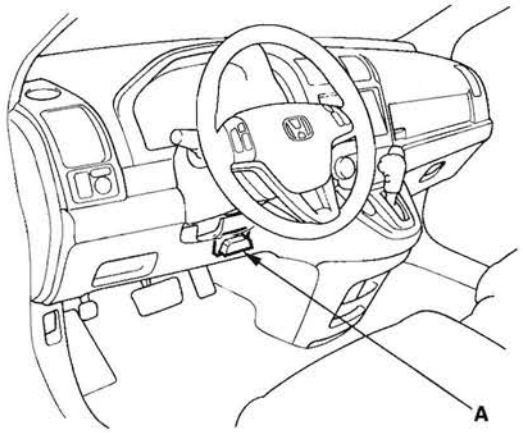

2. Turn the ignition switch ON (II).
3. Make sure the HDS communicates with the vehicle and the VSA modulator-control unit. If it doesn't, troubleshoot the DLC circuit (see page 11-197).
4. Check the diagnostic trouble code (DTC) and note it. Also check the on-board snapshot data, and download any data found. Then refer to the indicated DTC's troubleshooting, and begin the appropriate troubleshooting procedure.

   NOTE:
   - The HDS can read the DTC, the current data, and other system data.
   - For specific operations, refer to the Help menu that came with the HDS.

How to Retrieve DTCs

1. With the ignition switch OFF, connect the HDS to the data link connector (DLC) under the driver's side of the dashboard.
2. Turn the ignition switch ON (II).
3. Make sure the HDS communicates with the vehicle and the VSA modulator-control unit. If it doesn't, troubleshoot the DLC circuit (see page 11-197).
4. Follow the prompts on the HDS to display the DTC(s) on the screen. After determining the DTC, refer to the DTC troubleshooting.
5. Turn the ignition switch OFF.

How to Clear DTCs

1. With the ignition switch OFF, connect the HDS to the data link connector (DLC) under the driver's side of the dashboard.
2. Turn the ignition switch ON (II).
3. Make sure the HDS communicates with the vehicle and the VSA modulator-control unit. If it doesn't, troubleshoot the DLC circuit (see page 11-197).
4. Clear the DTC(s) by following the screen prompts on the HDS.
5. Turn the ignition switch OFF.

DTC Troubleshooting Index

DTC	Detection Item	ABS Indicator	Brake System Indicator	VSA Indicator	VSA Activation Indicator	Note
11	Right-front wheel sensor (open/short to body ground/ short to power)	ON	ON or OFF*	ON	ON	(see page 19-59)
12	Right-front wheel sensor (electrical noise/intermittent interruption)	ON	ON or OFF*	ON	ON	(see page 19-64)
13	Left-front wheel sensor (open/short to body ground/ short to power)	ON	ON or OFF*	ON	ON	(see page 19-59)
14	Left-front wheel sensor (electrical noise/intermittent interruption)	ON	ON or OFF*	ON	ON	(see page 19-64)
15	Right-rear wheel sensor (open/short to body ground/ short to power)	ON	ON or OFF*	ON	ON	(see page 19-59)
16	Right-rear wheel sensor (electrical noise/intermittent interruption)	ON	ON or OFF*	ON	ON	(see page 19-64)
17	Left-rear wheel sensor (open/short to body ground/ short to power)	ON	ON or OFF*	ON	ON	(see page 19-59)
18	Left-rear wheel sensor (electrical noise/intermittent interruption)	ON	ON or OFF*	ON	ON	(see page 19-64)
25	Yaw rate sensor (sensor unit)	OFF	OFF	ON	ON	(see page 19-65)
26	Lateral acceleration sensor (sensor unit)	OFF	OFF	ON	ON	(see page 19-65)
27	Steering angle sensor (hardware)	OFF	OFF	ON	ON	(see page 19-65)
31	ABS solenoid	ON	ON	ON	ON	(see page 19-67)
32	ABS solenoid	ON	ON	ON	ON	(see page 19-67)
33	ABS solenoid	ON	ON	ON	ON	(see page 19-67)
34	ABS solenoid	ON	ON	ON	ON	(see page 19-67)
35	ABS solenoid	ON	ON	ON	ON	(see page 19-67)
36	ABS solenoid	ON	ON	ON	ON	(see page 19-67)
37	ABS solenoid	ON	ON	ON	ON	(see page 19-67)
38	ABS solenoid	ON	ON	ON	ON	(see page 19-67)

*: Brake system indicator turns ON when three or more wheel sensors fail.

DTC	Detection Item	ABS Indicator	Brake System Indicator	VSA Indicator	VSA Activation Indicator	Note
51	Motor locked	ON	ON	ON	ON	(see page 19-68)
52	Motor stuck OFF	ON	ON	ON	ON	(see page 19-68)
53	Motor stuck ON	ON	ON	ON	ON	(see page 19-70)
54	Valve relay	ON	ON or OFF	ON	ON	(see page 19-71)
61	IG1 voltage low	ON	ON or OFF	ON	ON	(see page 19-72)
62	IG1 voltage high	ON	ON	ON	ON	(see page 19-73)
64	Steering angle sensor (power supply)	OFF	OFF	ON	ON	(see page 19-73)
66	VSA pressure sensor (hardware)	OFF	OFF	ON	ON	(see page 19-75)
68	Brake pedal position switch stuck ON (hardware)	OFF	OFF	ON	ON	(see page 19-76)
81	Central processing unit (CPU)	ON or OFF	ON or OFF	ON or OFF	ON or OFF	(see page 19-77)
83	PCM communication error	OFF	OFF	ON	ON	(see page 19-77)
86	F-CAN communication	OFF	OFF	ON	ON	(see page 19-78)
87	Current flow into wheel sensor input amplifier	ON	OFF	ON	ON	(see page 19-81)
88	Difference in wheel speed	ON	ON or OFF	ON	ON	(see page 19-82)
91	VSA system	ON	OFF	ON	ON	(see page 19-83)
113	Yaw rate-lateral acceleration sensor (power supply)	OFF	OFF	ON	ON	(see page 19-83)
114	Yaw rate-lateral acceleration sensor installation problem	OFF	OFF	ON	ON	(see page 19-84)
121	VSA solenoid	ON	ON	ON	ON	(see page 19-84)
122	VSA solenoid	ON	ON	ON	ON	(see page 19-84)
123	VSA solenoid	ON	ON	ON	ON	(see page 19-84)
124	VSA solenoid	ON	ON	ON	ON	(see page 19-84)
131	Yaw rate sensor (software)	OFF	OFF	ON	ON	(see page 19-85)
132	Lateral acceleration sensor (software)	OFF	OFF	ON	ON	(see page 19-86)
133	Lateral acceleration sensor (joint failure)	OFF	OFF	ON	ON	(see page 19-86)
134	Steering angle sensor (software)	OFF	OFF	ON	ON	(see page 19-87)
137	VSA pressure sensor (software)	OFF	OFF	ON	ON	(see page 19-88)
138	Brake pedal position switch stuck OFF (software)	OFF	OFF	ON	ON	(see page 19-89)

*: Brake system indicator turns ON when three or more wheel sensors fail.

Symptom Troubleshooting Index

When the vehicle has one of these symptoms, check for a diagnostic trouble code (DTC) with the HDS. If there is no DTC, do the diagnostic procedure for the symptom, in the sequence listed, until you find the cause.

Symptom	Diagnostic procedure
HDS does not communicate with the VSA modulator-control unit or the vehicle	Troubleshoot the DLC circuit (see page 11-197).
VSA activation indicator does not come on at start-up (bulb check)	1. Do the gauge control module troubleshooting (see page 22-229). 2. Substitute a known-good VSA modulator-control unit, then recheck. If it is OK, replace the original VSA modulator-control unit (see page 19-97).
VSA activation indicator does not go off, and no DTCs are stored	1. Symptom troubleshooting (see page 19-91). 2. Do the gauge control module troubleshooting (see page 22-229). 3. Substitute a known-good VSA modulator-control unit, then recheck. If it is OK, replace the original VSA modulator-control unit (see page 19-97).
ABS indicator, brake system indicator, and VSA indicator do not come on at the same time	1. Do the gauge control module troubleshooting (see page 22-229). 2. Substitute a known-good VSA modulator-control unit, then recheck. If it is OK, replace the original VSA modulator-control unit (see page 19-97).
ABS indicator, brake system indicator, and VSA indicator do not go off at the same time	1. Check for F-CAN DTCs, and troubleshoot and repair those first. 2. Symptom troubleshooting (see page 19-92). 3. Do the gauge control module troubleshooting (see page 22-229). 4. Substitute a known-good VSA modulator-control unit, then recheck. If it is OK, replace the original VSA modulator-control unit (see page 19-97).

System Description

VSA Modulator-control Unit Inputs and Outputs for 46P Connector

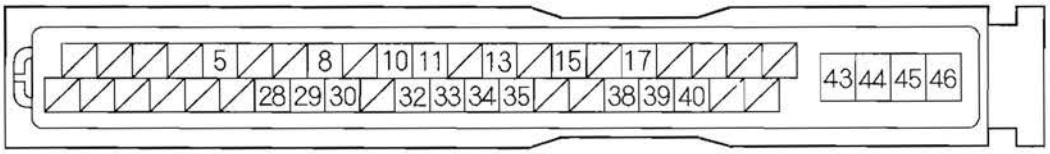

Wire side of female terminals

Terminal number	Wire color	Terminal name	Description	Measurement (Disconnect the VSA modulator-control unit 46P connector)		
				Terminal	Conditions	Result
5	PUR	ST-B	Detects steering angle sensor signal	—	—	—
8	BLU	RR-GND	Detects right-rear wheel sensor signal	—	—	—
10	PUR	RL-GND	Detects left-rear wheel sensor signal	—	—	—
11	YEL	RL +B	Detects left-rear wheel sensor signal	—	—	—
13	RED	FL-GND	Detects left-front wheel sensor signal	—	—	—
15	LT BLU	K-LINE	Communication with HDS	—	—	—
17	BLU	ST-Z	Detects steering angle sensor signal	—	—	—

(cont'd)

System Description (cont'd)

Terminal number	Wire color	Terminal name	Description	Measurement (Disconnect the VSA modulator-control unit 46P connector)		
				Terminal	Conditions	Result
28	PNK	FR-GND	Detects right-front wheel sensor signal	—	—	—
29	GRN	FR +B	Detects right-front wheel sensor signal	—	—	—
30	LT GRN	RR +B	Detects right-rear wheel sensor signal	—	—	—
32	RED	ST-A	Detects steering angle sensor signal	—	—	—
33	GRY	SVCC	Power source for the steering angle sensor	—	—	—
34	BLU	FL +B	Detects left-front wheel sensor signal	—	—	—
35	BRN	S-GND	Ground for the steering angle sensor	—	—	—
38	RED	CAN-L	F-CAN communication circuit	—	—	—
39	WHT	CAN-H	F-CAN communication circuit	—	—	—
40	YEL	IG1	Power source for activating the system	40—GND	Ignition switch ON (II)	Battery voltage
43	BLK	GND2	Ground for the VSA modulator-control unit	43—GND	At all time	Continuity to ground
44	WHT	+B SOL	Power source for the valve relay	44—GND	At all time	Battery voltage
45	RED	+B MOT	Power source for the motor relay	45—GND	At all time	Battery voltage
46	BLK	GND1	Ground for the pump motor	46—GND	At all time	Continuity to ground

System Outline

This system is composed of the VSA modulator-control unit, the wheel sensors, the steering angle sensor, and the yaw rate-lateral acceleration sensor, and the system indicators in the gauge control module. The VSA modulator-control unit controls the ABS, EBD, TCS, VSA, and brake assist with the brake pressure of each wheel and the engine torque.

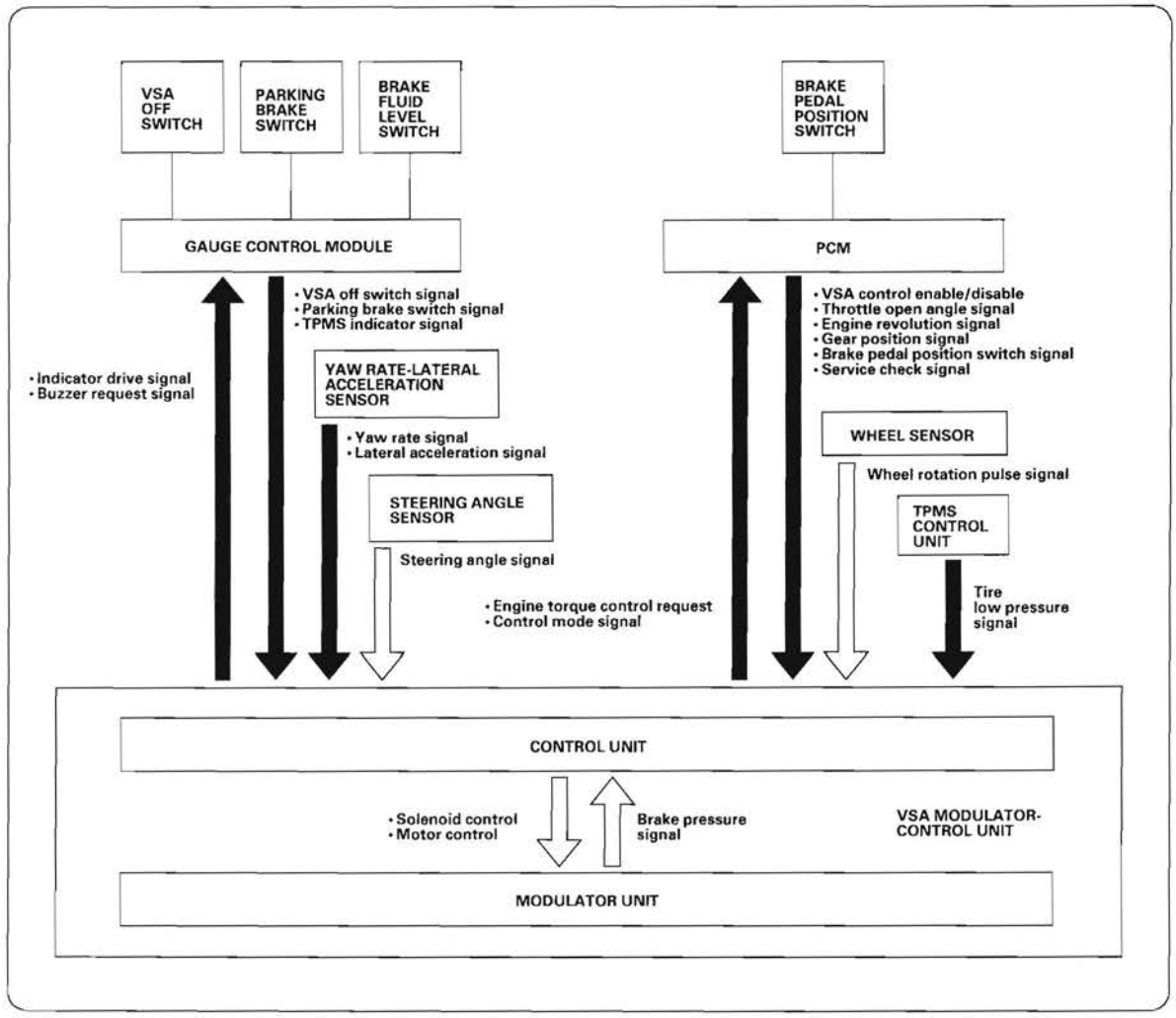

(cont'd)

System Description (cont'd)

ABS Features

Anti-lock control

Without ABS, when the brake pedal is pressed while driving, the wheels sometimes lock before the vehicle comes to a stop. In such an event, the maneuverability of the vehicle is reduced if the front wheels are locked, and the stability of the vehicle is reduced if the rear wheels are locked, creating an extremely unstable condition. With ABS, the system precisely controls the slip rate of the wheels to ensure maximum grip force from the tires, and it thereby ensures maneuverability and stability of the vehicle. The ABS calculates the slip rate of the wheels based on the four wheel speeds, then it controls the brake fluid pressure to reach the target slip rate.

Grip force of tire and road surface

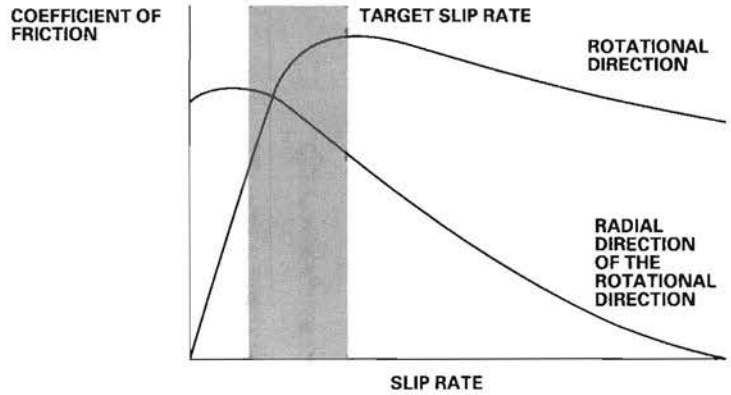

Main control

The control unit detects the wheel speed based on the wheel sensor signals it received, then it calculates the vehicle speed based on the detected wheel speed. The control unit detects the vehicle speed during deceleration based on the rate of deceleration.

The control unit calculates the slip rate of each wheel, and transmits the control signal to the modulator unit solenoid valve when the slip rate is high.

The hydraulic control has three modes: Pressure intensifying, pressure reducing, and pressure retaining.

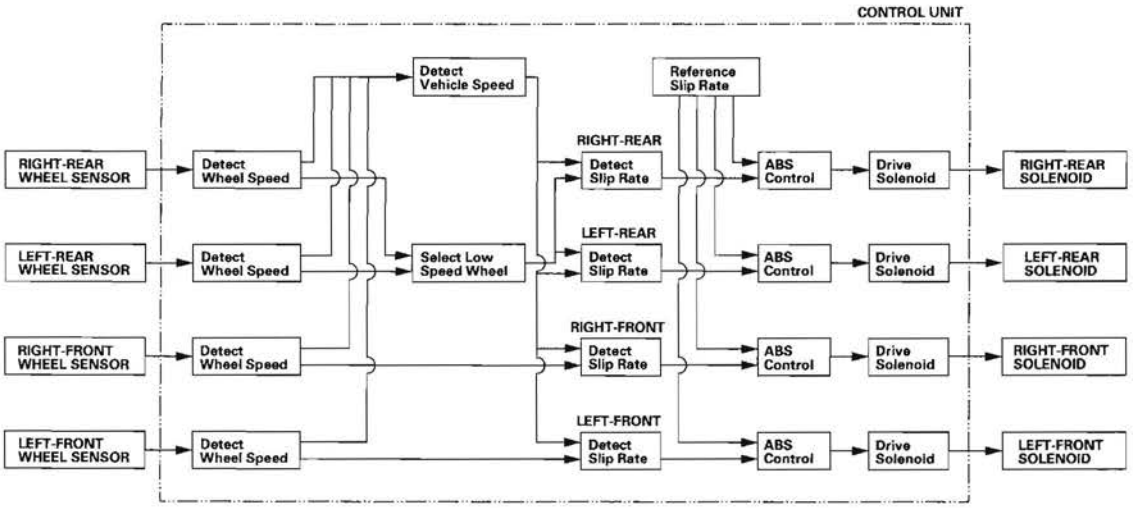

EBD Features

The electronic brake distribution (EBD) feature helps control vehicle braking by adjusting the rear brake force in accordance with the rear wheel load before the ABS operates. Based on the wheel sensor signals, the control unit uses the modulator to control the rear brakes individually. When the rear wheel speed is less than the front wheel speed, the VSA modulator-control unit retains the current rear brake fluid pressure by closing the inlet valve in the modulator. As the rear wheel speed increases and approaches the front wheel speed, the VSA modulator-control unit increases the rear brake fluid pressure by momentarily opening the inlet valve. This whole process is repeated very rapidly. While this is happening, kickback may be felt at the brake pedal.

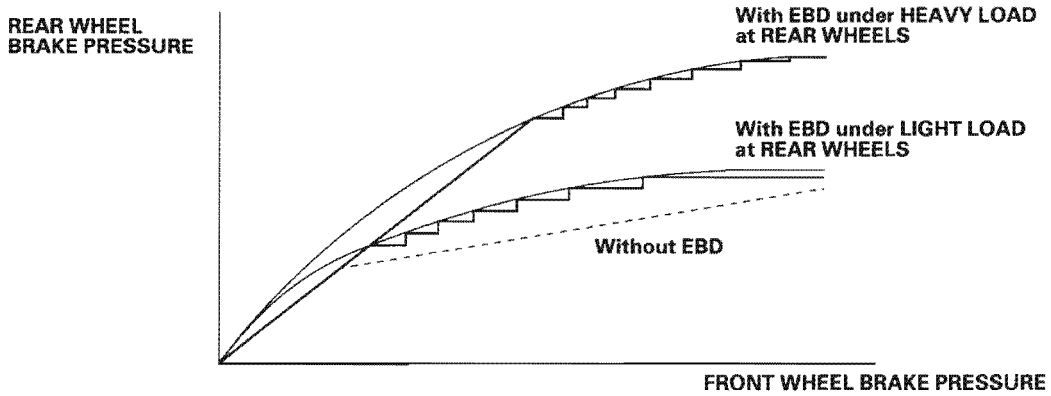

(cont'd)

System Description (cont'd)

TCS Features

When a drive wheel loses traction on a slippery road surface and starts to spin, the VSA modulator-control unit applies brake pressure to the spinning wheel and sends engine torque control request to the PCM to slow the spinning wheel and keep traction.

2WD

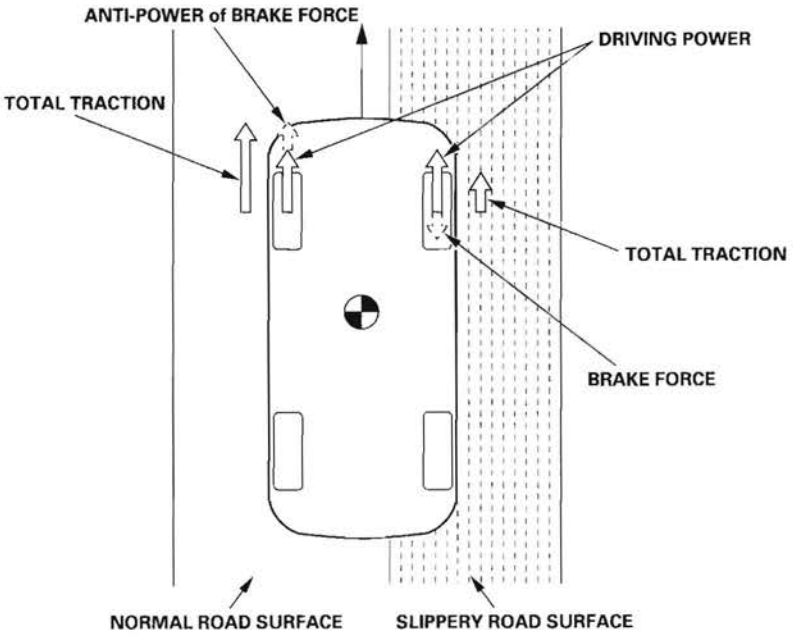

4WD

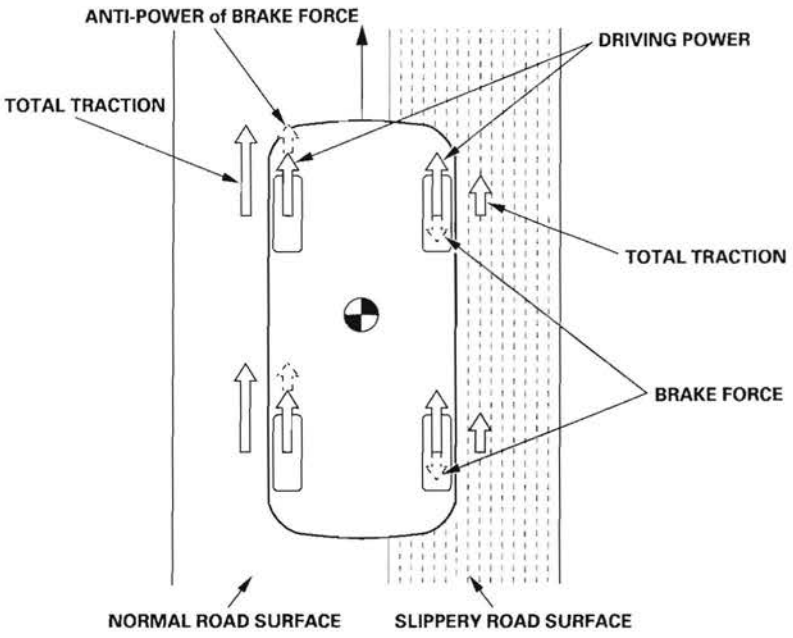

VSA System Features

Oversteer control
Applies the brake to the front and rear outside wheels

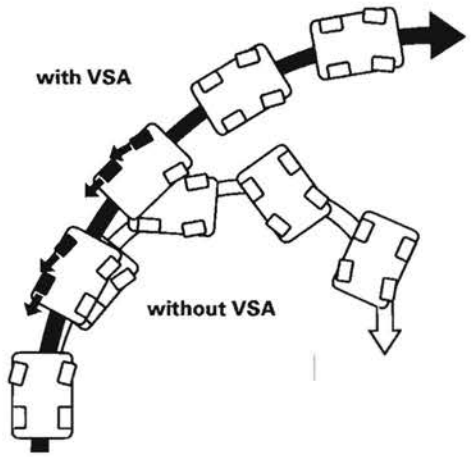

The brake makes the yaw rate opposite to the turning direction

Understeer control
- Applies the brake to the front and rear inside wheels
- Controls the engine torque when accelerating

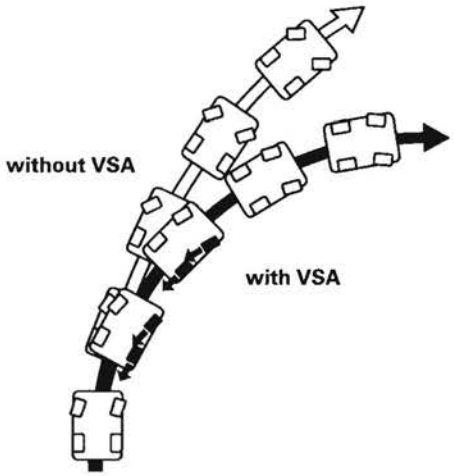

The brake increases the yaw rate toward the turning direction

The throttle control effect;
• reduces vehicle speed
• increases cornering force

(cont'd)

System Description (cont'd)

Brake Assist Features

Brake assist helps ensure that any driver can achieve the full braking potential of the vehicle by increasing brake system pressure in a panic situation, bringing the vehicle into a full ABS stop.
Each time the ignition switch is turned ON (II), the VSA modulator-control unit learns the current driver's normal braking characteristics by monitoring the brake pressure sensor and the brake pedal position switch at each stop. Using these inputs and their values, the VSA modulator-control unit is able to learn the driver's normal braking habits, and then determine the difference between a normal stop and a panic stop for the individual driver of the vehicle. If during a panic stop the VSA modulator-control unit determines that the brake system pressure increases above a learned threshold in less than a learned amount of time, the VSA modulator-control unit engages brake assist. Because the brake system pressure crossed the threshold before the time threshold had expired, the VSA modulator-control unit goes into brake assist mode.

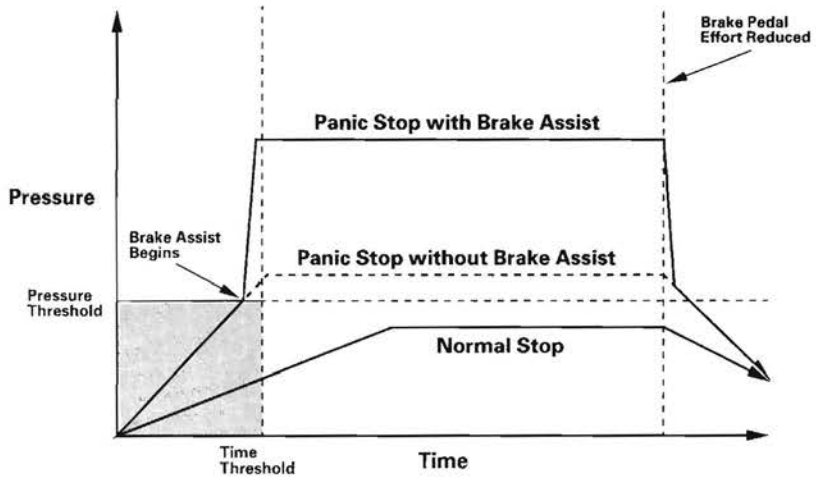

Modulator Unit

The modulator unit consists of the inlet solenoid valve, the outlet solenoid valve, the VSA NO (normally open) solenoid valve, the VSA NC (normally closed) solenoid valve, the reservoir, the pump, the pump motor, and the damping chamber.
The hydraulic control has three modes at ABS action; pressure intensifying, pressure retaining, and pressure reducing. And pressure adding mode is combined at TCS, VSA, and brake assist action.
The hydraulic circuit is an independent four channel type; one channel for each wheel.

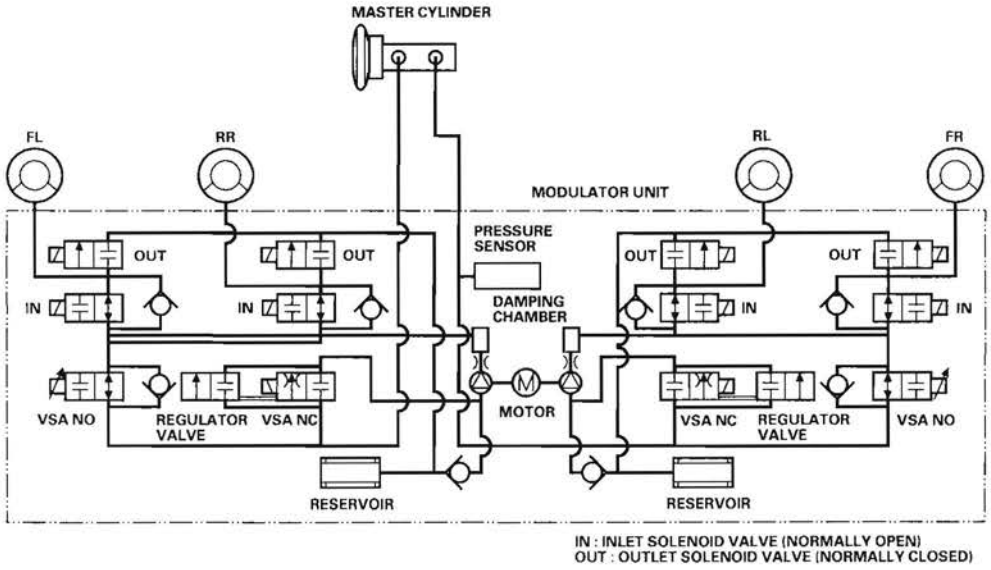

Mode	VSA NO Valve	VSA NC Valve	Inlet Solenoid Valve	Outlet Solenoid Valve	Brake Fluid
Pressure intensifying mode	open	closed	open	closed	Master cylinder fluid is pumped out to the caliper.
Pressure retaining mode	open	closed	closed	closed	Caliper fluid is retained by the inlet and outlet valves.
Pressure reducing mode	open	closed	closed	open	• Caliper fluid flows through the outlet valve to the reservoir. • The motor pumps the reservoir fluid through the damping chamber to the master cylinder*.
Pressure adding mode	closed	open	open	closed	• Master cylinder fluid is pumped out by pump with motor through VSA NC valve to the caliper. • Caliper fluid pressure exceed master cylinder pressure.

*: The motor will keep running until the operation of the one anti-lock brake control is finished with the first pressure reducing mode.

VSA System Components

Circuit Diagram

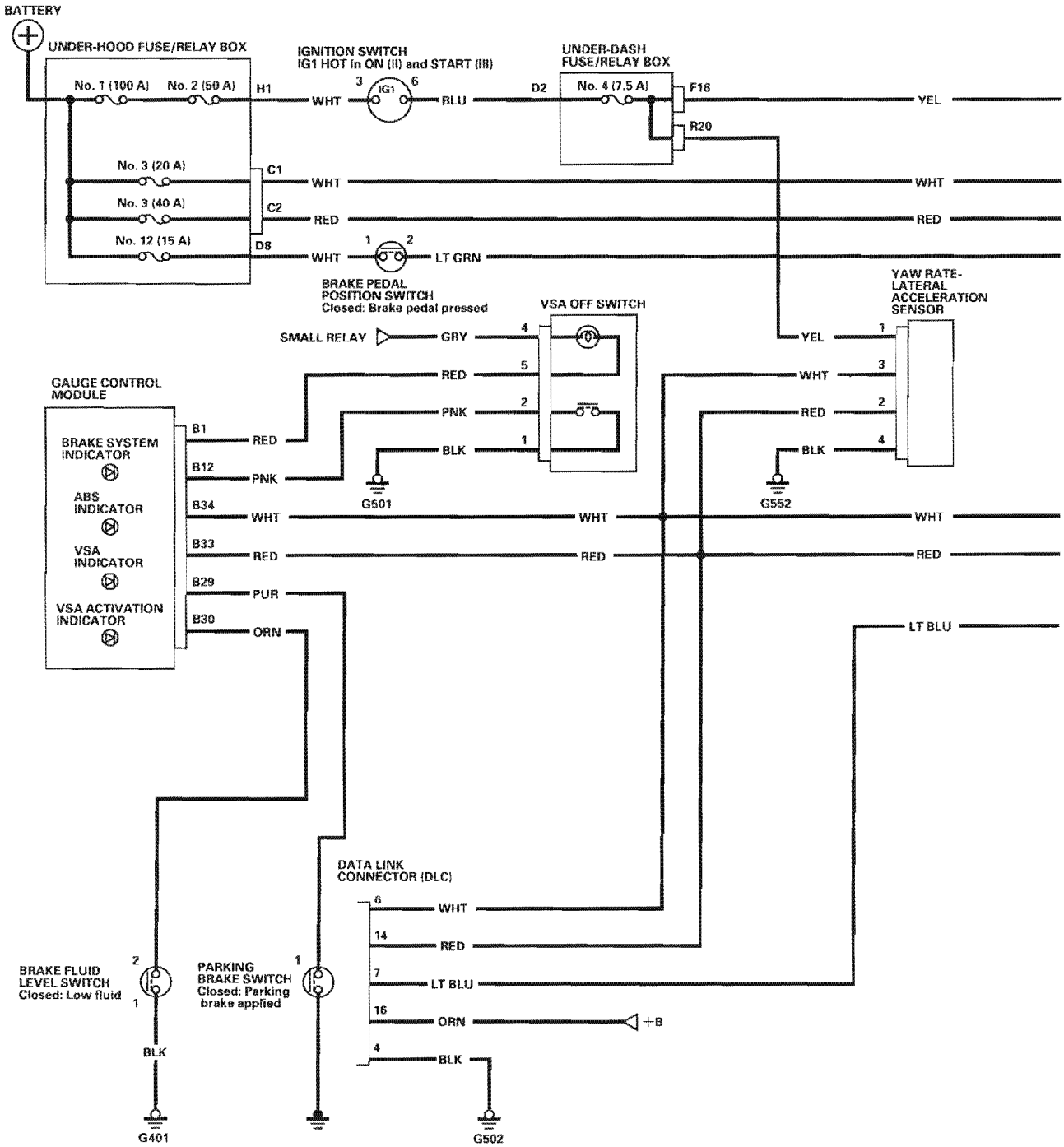

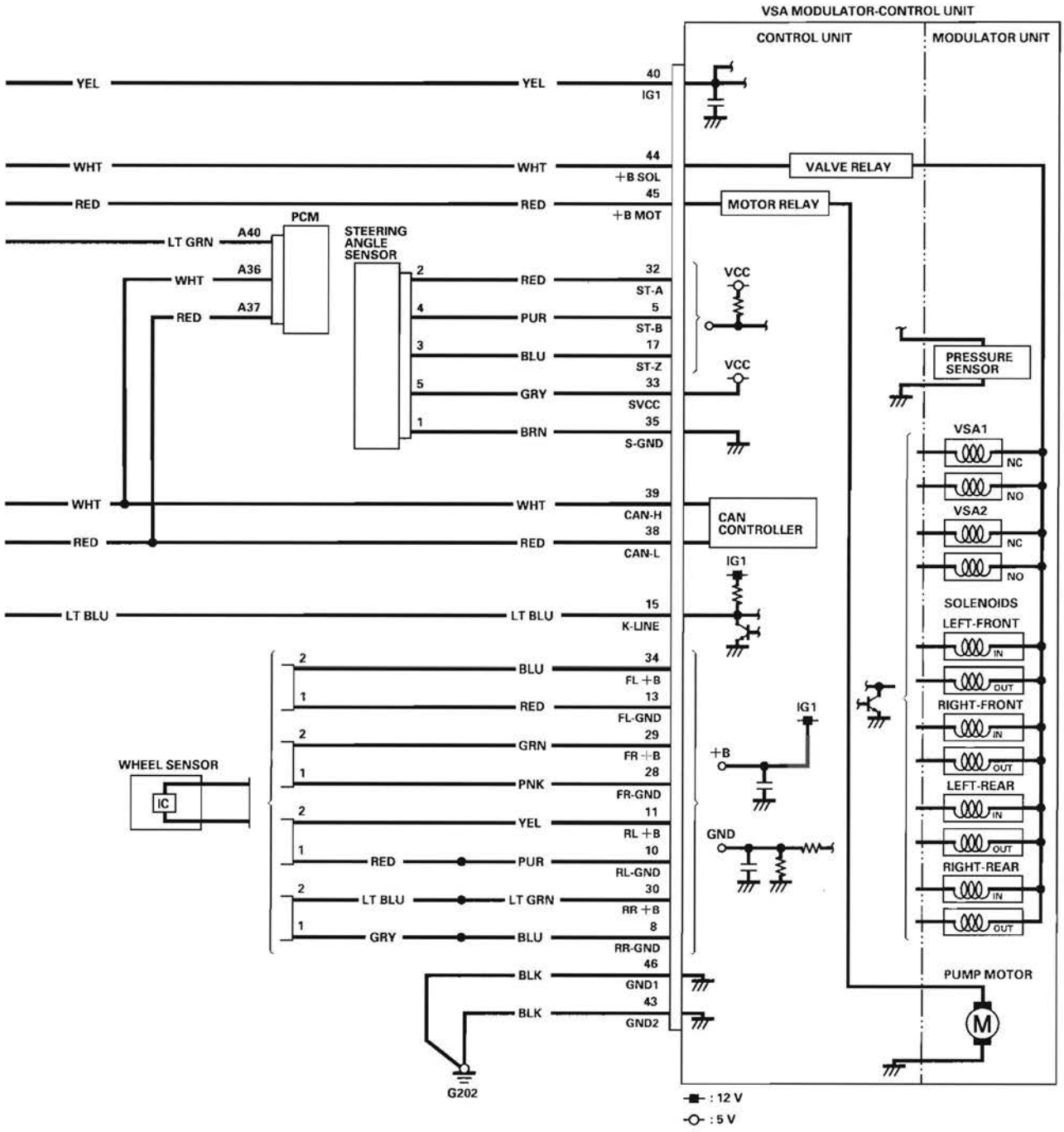
VSA MODULATOR-CONTROL UNIT
CONTROL UNIT
MODULATOR UNIT
YEL
YEL
40
IG1
WHT
WHT
44
+B SOL
VALVE RELAY
RED
RED
45
+B MOT
MOTOR RELAY
PCM
LT GRN
A40
STEERING ANGLE SENSOR
WHT
A36
RED
A37
2
RED
32
ST-A
VCC
4
PUR
5
ST-B
3
BLU
17
ST-Z
VCC
PRESSURE SENSOR
5
GRY
33
SVCC
1
BRN
35
S-GND
VSA1
NC
NO
WHT
WHT
39
CAN-H
CAN CONTROLLER
VSA2
RED
RED
38
CAN-L
NC
NO
IG1
SOLENOIDS
LT BLU
LT BLU
15
K-LINE
LEFT-FRONT
IN
OUT
2
BLU
34
FL +B
RIGHT-FRONT
1
RED
13
FL-GND
IG1
IN
OUT
2
GRN
29
FR +B
+B
WHEEL SENSOR
1
PNK
28
FR-GND
LEFT-REAR
IC
2
YEL
11
RL +B
IN
OUT
GND
1
RED
PUR
10
RL-GND
RIGHT-REAR
2
LT BLU
LT GRN
30
RR +B
IN
1
GRY
BLU
8
RR-GND
OUT
46
BLK
GND1
PUMP MOTOR
43
BLK
GND2
M
G202
: 12 V
: 5 V

(cont'd)

Circuit Diagram (cont'd)

UNDER-HOOD FUSE/RELAY BOX CONNECTOR C (2P)

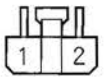

BRAKE PEDAL POSITION SWITCH 4P CONNECTOR

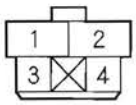

BRAKE FLUID LEVEL SWITCH 2P CONNECTOR



UNDER-DASH FUSE/RELAY BOX CONNECTOR F (34P)

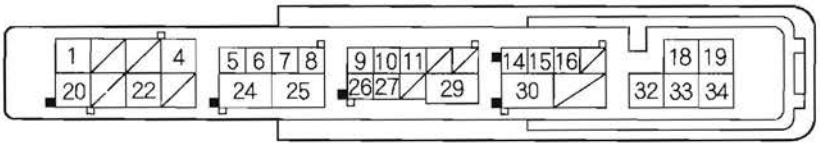

VSA OFF SWITCH 5P CONNECTOR

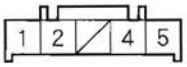

UNDER-DASH FUSE/RELAY BOX CONNECTOR R (20P)

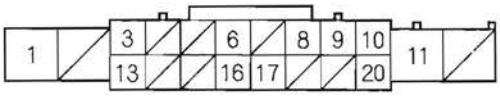

WHEEL SENSOR 2P CONNECTOR



YAW RATE-LATERAL ACCELERATION SENSOR 4P CONNECTOR

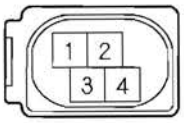

GAUGE CONTROL MODULE CONNECTOR B (36P)

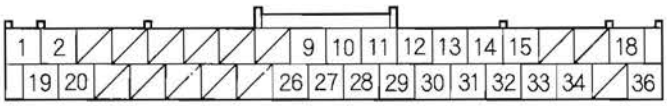

STEERING ANGLE SENSOR 5P CONNECTOR

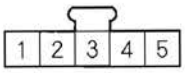

VSA MODULATOR-CONTROL UNIT 46P CONNECTOR

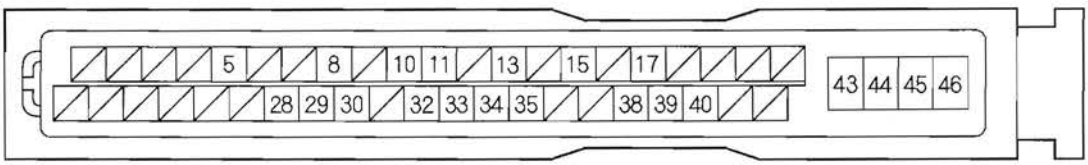

Wire side of female terminals

PCM CONNECTOR A (44P)

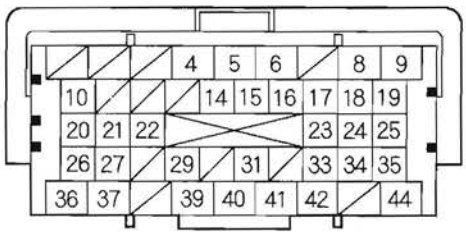

DATA LINK CONNECTOR (DLC)

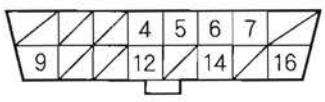

Terminal side of female terminals

DTC Troubleshooting

DTC 11, 13, 15, 17: Wheel Sensor (Open/Short to Body Ground/Short to Power)

1. Turn the ignition switch ON (II).
2. Check for DTCs with the HDS.

   Is DTC 87 indicated with DTC 11,13,15, and/or 17 at the same time?

   YES—Go to step 9.

   NO—Go to step 3.
3. Clear the DTC with the HDS.
4. Turn the ignition switch OFF, then turn it ON (II) again.
5. Check for DTCs with the HDS.

   Is DTC 11, 13, 15, and/or 17 indicated?

   YES—Go to step 6.

   NO—Intermittent failure, the system is OK at this time. Check for loose terminals between the wheel sensor 2P connector and the VSA modulator-control unit 46P connector. Check for a loose connection at G202. Refer to intermittent failures troubleshooting (see page 19-42).■
6. Turn the ignition switch OFF.
7. Check for loose terminals between the wheel sensor 2P connector and the VSA modulator-control unit 46P connector.

   Are their connections OK?

   YES—Go to step 8.

   NO—Reconnect the connector and retest.■
8. Check that the appropriate wheel sensor is properly mounted (see page 19-99).

DTC	Appropriate Wheel Sensor
11	Right-front
13	Left-front
15	Right-rear
17	Left-rear

   Is the wheel sensor installation OK?

   YES—Go to step 10.

   NO—Reinstall the wheel sensor, and check the mounting position (see page 19-99).■
9. Turn the ignition switch OFF.
10. Disconnect the VSA modulator-control unit 46P connector.
11. Start the engine.

(cont'd)

DTC Troubleshooting (cont'd)

12. Measure the voltage between body ground and the appropriate wheel sensor +B and GND terminals of the VSA modulator-control unit 46P connector respectively (see table).

DTC	Appropriate Terminal	
	+B	GND
11 (Right-front)	FR +B: No. 29	FR-GND: No. 28
13 (Left-front)	FL +B: No. 34	FL-GND: No. 13
15 (Right-rear)	RR +B: No. 30	RR-GND: No. 8
17 (Left-rear)	RL +B: No. 11	RL-GND: No. 10

VSA MODULATOR-CONTROL UNIT 46P CONNECTOR

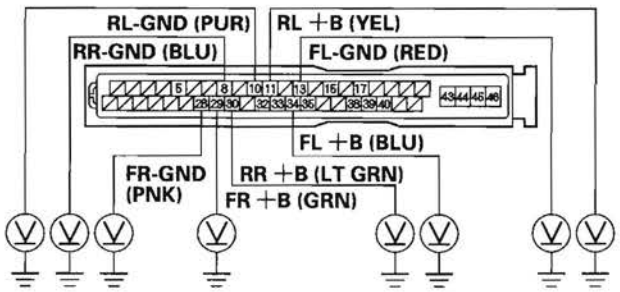

Wire side of female terminals

Is there 0.1 V or more?

YES—Repair short to power in the wire between the VSA modulator-control unit and the appropriate wheel sensor.■

NO—Go to step 13.

13. Turn the ignition switch OFF.

14. Check for continuity between body ground and the appropriate wheel sensor +B and GND terminals of the VSA modulator-control unit 46P connector respectively (see table).

DTC	Appropriate Terminal	
	+B	GND
11 (Right-front)	FR +B: No. 29	FR-GND: No. 28
13 (Left-front)	FL +B: No. 34	FL-GND: No. 13
15 (Right-rear)	RR +B: No. 30	RR-GND: No. 8
17 (Left-rear)	RL +B: No. 11	RL-GND: No. 10

VSA MODULATOR-CONTROL UNIT 46P CONNECTOR

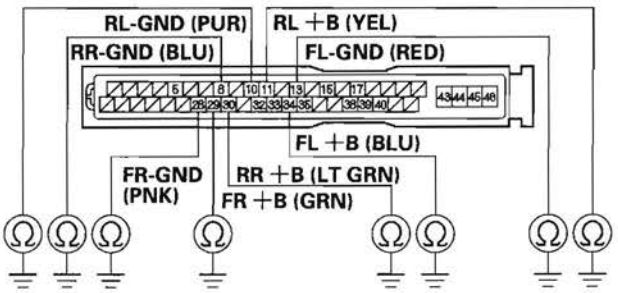

Wire side of female terminals

Is there continuity?

YES—Go to step 15.

NO—Go to step 17.

15. Disconnect the appropriate wheel sensor 2P connector.

16. Check for continuity between body ground and the appropriate wheel sensor +B and GND terminals of the VSA modulator-control unit 46P connector respectively (see table).

DTC	Appropriate Terminal	
	+B	GND
11 (Right-front)	FR +B: No. 29	FR-GND: No. 28
13 (Left-front)	FL +B: No. 34	FL-GND: No. 13
15 (Right-rear)	RR +B: No. 30	RR-GND: No. 8
17 (Left-rear)	RL +B: No. 11	RL-GND: No. 10

VSA MODULATOR-CONTROL UNIT 46P CONNECTOR

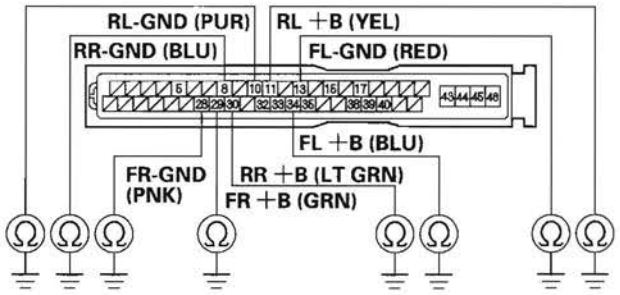

Wire side of female terminals

Is there continuity?

YES—Repair short to body ground in the wire between the VSA modulator-control unit and the appropriate wheel sensor. ■

NO—Replace the appropriate wheel sensor (see page 19-99). ■

17. Measure resistance between the appropriate VSA modulator-control unit 46P connector wheel sensor +B and GND terminals (see table), then measure the resistance between the same terminals and reverse the positive and negative tester probes.

DTC	Appropriate Terminal	
	+B	GND
11 (Right-front)	FR +B: No. 29	FR-GND: No. 28
13 (Left-front)	FL +B: No. 34	FL-GND: No. 13
15 (Right-rear)	RR +B: No. 30	RR-GND: No. 8
17 (Left-rear)	RL +B: No. 11	RL-GND: No. 10

VSA MODULATOR-CONTROL UNIT 46P CONNECTOR

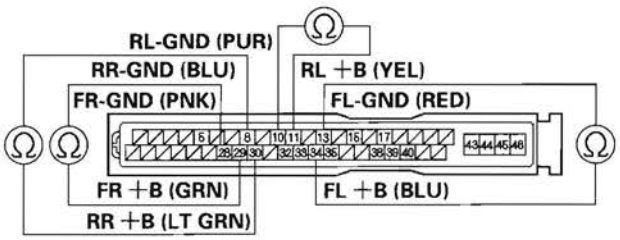

Wire side of female terminals

Is the resistance infinity (Ohmmeter may read OL) in both directions?

YES—Go to step 18.

NO—Go to step 20.

(cont'd)

DTC Troubleshooting (cont'd)

18. Disconnect the appropriate wheel sensor 2P connector.

19. On the sensor side, measure resistance between appropriate wheel sensor 2P connector terminals No. 1 and No. 2, then measure resistance between the same terminals and reverse the positive and negative tester probes.

WHEEL SENSOR 2P CONNECTOR

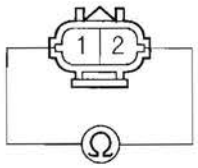

Terminal side of male terminals

Is the resistance infinity (Ohmmeter may read OL) in both directions?

YES—Replace the appropriate wheel sensor (see page 19-99).■

NO—Repair open in the wire between the appropriate wheel sensor and the VSA modulator-control unit.■

20. Check for continuity between the appropriate VSA modulator-control unit 46P connector wheel sensor +B and GND terminals (see table), then check for continuity between the same terminals and reverse the positive and negative taster probes.

DTC	Appropriate Terminal	
	+B	GND
11 (Right-front)	FR +B: No. 29	FR-GND: No. 28
13 (Left-front)	FL +B: No. 34	FL-GND: No. 13
15 (Right-rear)	RR +B: No. 30	RR-GND: No. 8
17 (Left-rear)	RL +B: No. 11	RL-GND: No. 10

VSA MODULATOR-CONTROL UNIT 46P CONNECTOR

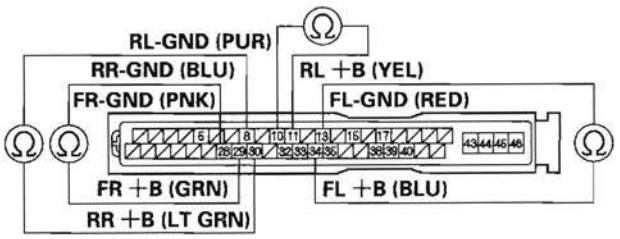

Wire side of female terminals

Is there continuity in both directions?

YES—Go to step 21.

NO—Check for loose terminals in the VSA modulator-control unit 46P connector. Check for a loose connection at G202. If necessary, substitute a known-good VSA modulator-control unit (see page 19-97) and retest.■

21. Disconnect the appropriate wheel sensor 2P connector.

22. Check for continuity between the appropriate VSA modulator-control unit 46P connector wheel sensor +B and GND terminals (see table), then check for continuity between the same terminals and reverse the positive and negative tester probes.

DTC	Appropriate Terminal	
	+B	GND
11 (Right-front)	FR +B: No. 29	FR-GND: No. 28
13 (Left-front)	FL +B: No. 34	FL-GND: No. 13
15 (Right-rear)	RR +B: No. 30	RR-GND: No. 8
17 (Left-rear)	RL +B: No. 11	RL-GND: No. 10

VSA MODULATOR-CONTROL UNIT 46P CONNECTOR

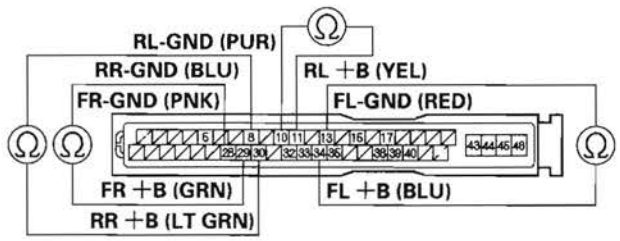

Wire side of female terminals

Is there continuity in both directions?

YES—Repair short in the wires between the VSA modulator-control unit and the appropriate wheel sensor. ■

NO—Replace the appropriate wheel sensor (see page 19-99). ■

DTC Troubleshooting (cont'd)

DTC 12, 14, 16, 18: Wheel Sensor (Electrical Noise/Intermittent Interruption)

NOTE:
- If the ABS and other indicators come on because of electrical noise, the indicators will go off when you test-drive the vehicle at 10 mph (15 km/h) or more and noise is gone.
- An incorrectly installed wheel bearing can cause one of these DTCs.

1. Turn the ignition switch OFF.
2. Check the appropriate wheel sensor and magnetic encoder on the front wheel bearing (see page 18-13) or magnetic encoder on the rear hub bearing unit (see page 18-32).

DTC	Appropriate Wheel Sensor and Magnetic Encoder
12	Right-front
14	Left-front
16	Right-rear
18	Left-rear

Are they installed correctly and in good condition?

YES—Go to step 3.

NO—Reinstall or replace the appropriate wheel sensor, front wheel bearing, or rear hub bearing unit, and recheck by test-driving.■

3. Substitute an appropriate known-good wheel sensor (see page 19-99).
4. Turn the ignition switch ON (II).
5. Clear the DTC with the HDS.
6. Test-drive the vehicle at 10 mph (15 km /h) or more.
7. Check for DTCs with the HDS.

Is DTCs 12, 14, 16, and/or 18 indicated?

YES—Go to step 8.

NO—Replace the original wheel sensor (see page 19-99).■

8. Turn the ignition switch OFF.
9. Replace the appropriate front wheel bearing (see page 18-16), or substitute a known-good rear hub bearing unit (see page 18-32).
10. Turn the ignition switch ON (II).
11. Clear the DTC with the HDS.
12. Test-drive the vehicle at 10 mph (15 km /h) or more.
13. Check for DTCs with the HDS.

Is DTCs 12, 14, 16, and/or 18 indicated?

YES—Check for loose terminals in the VSA modulator-control unit 46P connector. Check for a loose connection at G202. If necessary, substitute a known-good VSA modulator-control unit (see page 19-97) and retest.■

NO—
- Front: Troubleshooting is complete.■
- Rear: Replace the original rear hub bearing unit (see page 18-32).■

DTC 25: Yaw Rate Sensor (Sensor Unit)

DTC 26: Lateral Acceleration Sensor (Sensor Unit)

1. Turn the ignition switch OFF.
2. Substitute a known-good yaw rate-lateral acceleration sensor.
3. Turn the ignition switch ON (II).
4. Clear the DTC with the HDS.
5. Test-drive the vehicle. Drive the vehicle at 19 mph (30 km/h) or more, and go a distance of 985 ft (300 m) or more.
6. Check for DTCs with the HDS.

   Is DTC 25 or 26 indicated?

   YES—Check for loose terminals in the VSA modulator-control unit 46P connector. Check for a loose connection at G202. If necessary, substitute a known-good VSA modulator-control unit (see page 19-97) and retest. ■

   NO—Replace the original yaw rate-lateral acceleration sensor. ■

DTC 27: Steering Angle Sensor (Hardware)

1. Turn the ignition switch OFF.
2. Disconnect the steering angle sensor 5P connector.
3. Disconnect the VSA modulator-control unit 46P connector.
4. Turn the ignition switch ON (II).
5. Measure the voltage between body ground and VSA modulator-control unit 46P connector terminals No. 5, No. 17, No. 32, and No. 35 respectively.

VSA MODULATOR-CONTROL UNIT 46P CONNECTOR

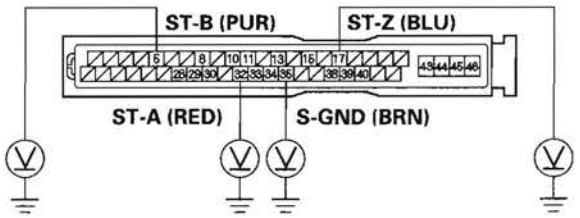

Wire side of female terminals

Is there 0.1 V or more?

YES—Repair short to power in the wire between the VSA modulator-control unit and the steering angle sensor. ■

NO—Go to step 6.

(cont'd)

DTC Troubleshooting (cont'd)

6. Turn the ignition switch OFF.
7. Check for continuity between body ground and VSA modulator-control unit 46P connector terminals No. 5, No. 17, and No. 32 respectively.

VSA MODULATOR-CONTROL UNIT 46P CONNECTOR

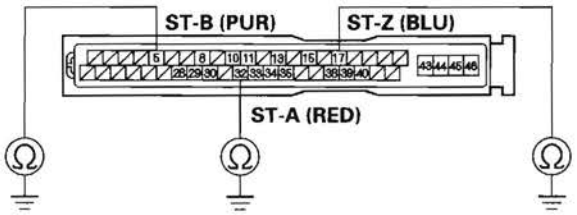

Wire side of female terminals

Is there continuity?

YES—Repair short to body ground in the wire between the VSA modulator-control unit and the steering angle sensor. ■

NO—Go to step 8.

8. Check for continuity between the appropriate VSA modulator-control unit 46P connector terminals and steering angle sensor 5P connector terminals respectively (see table).

Terminal Name	Connector Terminal No.	
	VSA Modulator-control Unit	Steering Angle Sensor
ST-B	5	4
ST-Z	17	3
ST-A	32	2
SVCC	33	5
S-GND	35	1

VSA MODULATOR-CONTROL UNIT 46P CONNECTOR
Wire side of female terminals

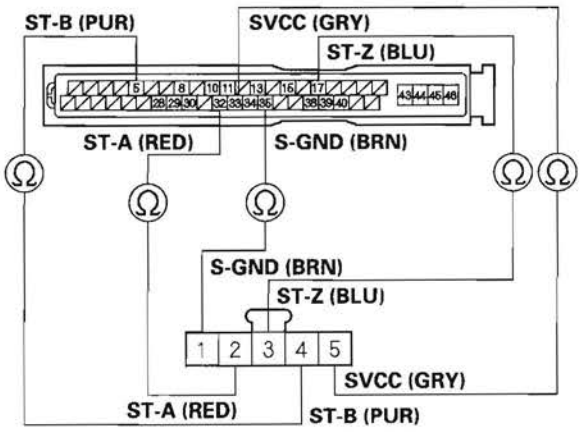

STEERING ANGLE SENSOR 5P CONNECTOR
Wire side of female terminals

Is there continuity?

YES—Go to step 9.

NO—Repair open in the wire between the VSA modulator-control unit and the steering angle sensor. ■

9. Substitute a known-good steering angle sensor (see page 19-94).
10. Reconnect all connectors.
11. Turn the ignition switch ON (II).
12. Clear the DTC with the HDS.
13. Test-drive the vehicle around a number of corners.
14. Check for DTCs with the HDS.

    Is DTC 27 indicated?

    YES—Check for loose terminals in the VSA modulator-control unit 46P connector. Check for a loose connection at G202. If necessary, substitute a known-good VSA modulator-control unit (see page 19-97), and retest. ■

    NO—Replace the original steering angle sensor (see page 19-94). ■

DTC 31, 32, 33, 34, 35, 36, 37, 38: ABS Solenoid

1. Turn the ignition switch ON (II).
2. Clear the DTC with the HDS.
3. Turn the ignition switch OFF, then turn it ON (II) again.
4. Check for DTCs with the HDS.

    Is DTC 31, 32, 33, 34, 35, 36, 37, and/or 38 indicated?

    YES—Replace the VSA modulator-control unit (see page 19-97). ■

    NO—Intermittent failure, the system is OK at this time. Check for a loose connection at G202. ■

DTC Troubleshooting (cont'd)

DTC 51: Motor Locked

1. Turn the ignition switch ON (II).
2. Clear the DTC with the HDS.
3. Test-drive the vehicle. Drive the vehicle at 10 mph (15 km/h) or more, with the engine speed at 2,500 rpm or more.
4. Check for DTCs with the HDS.

   Is DTC 51 indicated?

   YES—Replace the VSA modulator-control unit (see page 19-97). ■

   NO—Intermittent failure, the system is OK at this time. Check for a loose connection at G202. ■

DTC 52: Motor Stuck OFF

1. Turn the ignition switch OFF.
2. Check the No. 3 (40 A) fuse in the under-hood fuse/relay box.

   Is the fuse blown?

   YES—Go to step 3.

   NO—Reinstall the checked fuse, then go to step 5.
3. Disconnect the VSA modulator-control unit 46P connector.
4. Check for continuity between VSA modulator-control unit 46P connector terminal No. 45 and body ground.

VSA MODULATOR-CONTROL UNIT 46P CONNECTOR

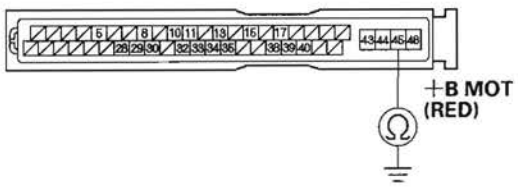

Wire side of female terminals

Is there continuity?

YES—Repair short to body ground in the wire between the No. 3 (40 A) fuse in the under-hood fuse/relay box and the VSA modulator-control unit. ■

NO—Install a new No. 3 (40 A) fuse, then go to step 6.

5. Disconnect the VSA modulator-control unit 46P connector.

6. Measure the voltage between VSA modulator-control unit 46P connector terminal No. 45 and body ground.

VSA MODULATOR-CONTROL UNIT 46P CONNECTOR

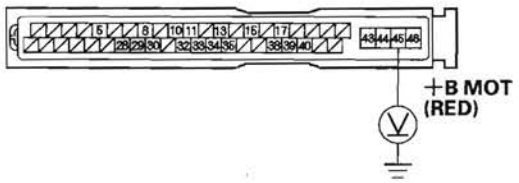

Wire side of female terminals

Is there battery voltage?

YES—Go to step 7.

NO—Repair open in the wire between the No. 3 (40 A) fuse in the under-hood fuse/relay box and the VSA modulator-control unit. ■

7. Reconnect the VSA modulator-control unit 46P connector.

8. Turn the ignition switch ON (II).

9. Clear the DTC with the HDS.

10. Test-drive the vehicle. Drive the vehicle at 10 mph (15 km/h) or more, with the engine speed at 2,500 rpm or more.

11. Check for DTCs with the HDS.

Is DTC 52 indicated?

YES—Check for loose terminals in the VSA modulator-control unit 46P connector. Check for a loose connection at G202. If necessary, substitute a known-good VSA modulator-control unit (see page 19-97) and retest. ■

NO—Intermittent failure, the system is OK at this time. Check for loose terminals at the VSA modulator-control unit 46P connector. Check for a loose connection at G202. Refer to intermittent failures troubleshooting (see page 19-42). ■

DTC Troubleshooting (cont'd)

DTC 53: Motor Stuck ON

1. Turn the ignition switch ON (II).

   Is the pump motor working?

   YES—Replace the VSA modulator-control unit (see page 19-97). ■

   NO—Go to step 2.

2. Turn the ignition switch OFF.

3. Disconnect the VSA modulator-control unit 46P connector.

4. Check for continuity between VSA modulator-control unit 46P connector terminal No. 46 and body ground.

VSA MODULATOR-CONTROL UNIT 46P CONNECTOR

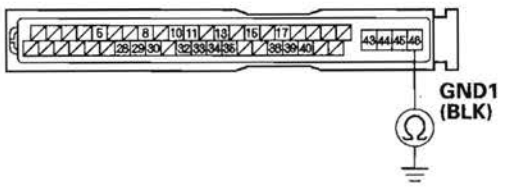

Wire side of female terminals

Is there continuity?

YES—Go to step 5.

NO—Repair open in the wire between the VSA modulator-control unit and body ground (G202). ■

5. Reconnect the VSA modulator-control unit 46P connector.

6. Turn the ignition switch ON (II).

7. Clear the DTC with the HDS.

8. Test-drive the vehicle. Drive the vehicle at 10 mph (15 km/h) or more, and the engine speed is 2,500 rpm or more.

9. Check for DTCs with the HDS.

   Is DTC 53 indicated?

   YES—Check for loose terminals in the VSA modulator-control unit 46P connector. Check for a loose connection at G202. If necessary, substitute a known-good VSA modulator-control unit (see page 19-97) and retest. ■

   NO—Intermittent failure, the system is OK at this time. Check for loose terminals at the VSA modulator-control unit 46P connector. Check for a loose connection at G202. Refer to intermittent failures troubleshooting (see page 19-42). ■

DTC 54: Valve Relay

1. Turn the ignition switch OFF.
2. Check the No. 3 (20 A) fuse in the under-hood fuse/relay box.

   Is the fuse blown?

   YES—Go to step 3.

   NO—Reinstall the checked fuse, then go to step 5.
3. Disconnect the VSA modulator-control unit 46P connector.
4. Check for continuity between VSA modulator-control unit 46P connector terminal No. 44 and body ground.

VSA MODULATOR-CONTROL UNIT 46P CONNECTOR

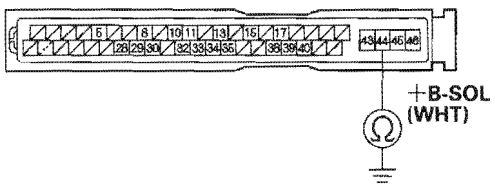

Wire side of female terminals

Is there continuity?

YES—Repair short to body ground in the wire between the No. 3 (20 A) fuse in the under-hood fuse/relay box and the VSA modulator-control unit. ■

NO—Install a new No. 3 (20 A) fuse, then go to step 6.

5. Disconnect the VSA modulator-control unit 46P connector.
6. Measure the voltage between VSA modulator-control unit 46P connector terminal No. 44 and body ground.

VSA MODULATOR-CONTROL UNIT 46P CONNECTOR

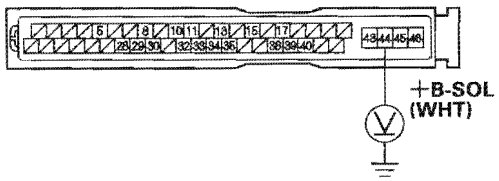

Wire side of female terminals

Is there battery voltage?

YES—Go to step 7.

NO—Repair open in the wire between the No. 3 (20 A) fuse in the under-hood fuse/relay box and the VSA modulator-control unit. ■

(cont'd)

DTC Troubleshooting (cont'd)

7. Reconnect the VSA modulator-control unit 46P connector.
8. Turn the ignition switch ON (II).
9. Clear the DTC with the HDS.
10. Turn the ignition switch OFF, then turn it ON (II) again.
11. Check for DTCs with the HDS.

    Is DTC 54 indicated?

    YES—Check for loose terminals in the VSA modulator-control unit 46P connector. Check for a loose connection at G202. If necessary, substitute a known-good VSA modulator-control unit (see page 19-97) and retest. ■

    NO—Intermittent failure, the system is OK at this time. Check for loose terminals at the VSA modulator-control unit 46P connector. Check for a loose connection at G202. Refer to intermittent failures troubleshooting (see page 19-42). ■

DTC 61: IG1 Voltage Low

1. Turn the ignition switch ON (II).
2. Clear the DTC with the HDS.
3. Test-drive the vehicle at 2 mph (3 km/h) or more.
4. Check for DTCs with the HDS.

    Is DTC 61 indicated?

    YES—Go to step 5.

    NO—Intermittent failure, the system is OK at this time. Check for loose terminals at the VSA modulator-control unit 46P connector. Check for a loose connection at G202. Refer to intermittent failures troubleshooting (see page 19-42). ■

5. Test the battery and check the connections.

    Are the battery and battery connections OK?

    YES—Check for a poor connection at the battery terminals, and all IG1 circuit connections between the VSA modulator-control unit 46P connector terminal No. 40 and the under-dash fuse/relay box No. 4 (7.5 A) fuse. Check for a loose connection at G202. If the connections are good, go to the Alternator and Regulator Circuit Troubleshooting (see page 4-26). ■

    NO—Replace or charge the battery (see page 22-65), or repair the connections. ■

DTC 62: IG1 Voltage High

NOTE: An overcharging alternator can cause this DTC.

1. Turn the ignition switch ON (II).
2. Clear the DTC with the HDS.
3. Test-drive the vehicle at 2 mph (3 km/h) or more.
4. Check for DTCs with the HDS.

   Is DTC 62 indicated?

   YES—Check for a poor connection at the battery terminals. Check for a loose connection at G202. If the connections are good, go to the Alternator and Regulator Circuit Troubleshooting (see page 4-26). ■

   NO—Intermittent failure, the system is OK at this time. Check for loose terminals at the VSA modulator-control unit 46P connector. Check for a loose connection at G202. Refer to intermittent failures troubleshooting (see page 19-42). ■

DTC 64: Steering Angle Sensor (Power Supply)

1. Turn the ignition switch ON (II).
2. Clear the DTC with the HDS.
3. Turn the ignition switch OFF, then turn it ON (II) again.
4. Check for DTCs with the HDS.

   Is DTC 64 indicated?

   YES—Go to step 5.

   NO—Intermittent failure, the system is OK at this time. Check for loose terminals at the VSA modulator-control unit 46P connector. Check for a loose connection at G202. Refer to intermittent failures troubleshooting (see page 19-42). ■
5. Turn the ignition switch OFF.
6. Disconnect the VSA modulator-control unit 46P connector.
7. Turn the ignition switch ON (II).

(cont'd)

DTC Troubleshooting (cont'd)

8. Measure the voltage between VSA modulator-control unit 46P connector terminal No.33 and body ground.

VSA MODULATOR-CONTROL UNIT 46P CONNECTOR

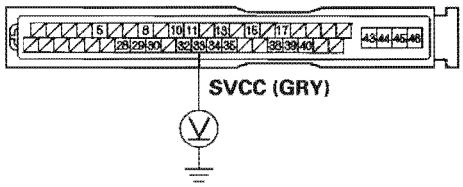

Wire side of female terminals

Is there battery voltage?

YES—Repair short to power in the wire between the VSA modulator-control unit and the steering angle sensor. ■

NO—Go to step 9.

9. Turn the ignition switch OFF.

10. Check for continuity between VSA modulator-control unit 46P connector terminal No. 33 and body ground.

VSA MODULATOR-CONTROL UNIT 46P CONNECTOR

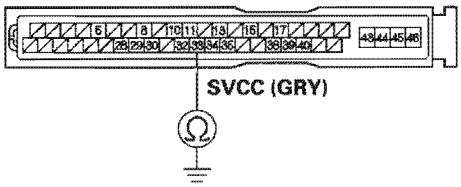

Wire side of female terminals

Is there continuity?

YES—Repair short to body ground in the wire between the VSA modulator-control unit and the steering angle sensor. ■

NO—Go to step 11.

11. Reconnect the VSA modulator-control unit 46P connector.
12. Disconnect the steering angle sensor 5P connector.
13. Turn the ignition switch ON (II).
14. Measure the voltage between steering angle sensor 5P connector terminals No. 1 and No. 5.

STEERING ANGLE SENSOR 5P CONNECTOR

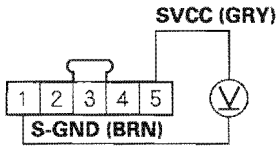

Wire side of female terminals

Is there 5 V?

YES—Replace the steering angle sensor (see page 19-94). ■

NO—Check for loose terminals in the VSA modulator-control unit 46P connector. Check for a loose connection at G202. If necessary, substitute a known-good VSA modulator-control unit (see page 19-97) and retest. ■

DTC 66: VSA Pressure Sensor (Hardware)

1. Turn the ignition switch ON (II).
2. Clear the DTC with the HDS.
3. Turn the ignition switch OFF, then turn it ON (II) again.
4. Check for DTCs with the HDS.

Is DTC 66 indicated?

YES—Replace the VSA modulator-control unit (see page 19-97). ■

NO—Intermittent failure, the system is OK at this time. Check for a loose connection at G202. ■

DTC Troubleshooting (cont'd)

DTC 68: Brake Pedal Position Switch Stuck ON (Hardware)

1. Turn the ignition switch ON (II).
2. Check for DTCs with the HDS.

   Is DTC 86 indicated with DTC 68 at the same time?

   YES—Do the DTC 86 troubleshooting (see page 19-78). ■

   NO—Go to step 3.
3. Check the BRAKE SWITCH in the VSA DATA LIST with the HDS while moving the brake pedal.

   Does it indicate ON when the pedal is pressed, and OFF when the pedal is released?

   YES—Go to step 4.

   NO—Go to step 7.
4. Clear the DTC with the HDS.
5. Test-drive the vehicle at 10 mph (15 km/h) for 60 seconds or more.
6. Check for DTCs with the HDS.

   Is DTC 68 indicated?

   YES—Check for loose terminals in the VSA modulator-control unit 46P connector. Check for a loose connection at G202. If necessary, substitute a know-good VSA modulator-control unit (see page 19-97) and retest. ■

   NO—Intermittent failure, the system is OK at this time. Check for loose terminals at the VSA modulator-control unit 46P connector. Check for a loose connection at G202. Refer to intermittent failures troubleshooting (see page 19-42). ■
7. Turn the ignition switch OFF.
8. Disconnect the brake pedal position switch 4P connector.
9. Do the brake pedal position switch test (see page 22-166).

   Is the switch OK?

   YES—Check the fuel and emissions systems, and troubleshoot the brake pedal position switch signal circuit (see page 11-301). ■

   NO—Replace the brake pedal position switch (see page 19-6). ■

DTC 81: Central Processing Unit (CPU)

1. Turn the ignition switch ON (II).
2. Clear the DTC with the HDS.
3. Turn the ignition switch OFF, then turn it ON (II) again.
4. Check for DTCs with the HDS.

   Is DTC 81 indicated?

   YES—Replace the VSA modulator-control unit (see page 19-97). ■

   NO—Intermittent failure, the system is OK at this time. Check for loose terminals in the VSA modulator-control unit 46P connector. Check for a loose connection at G202. ■

DTC 83: PCM Communication Error

1. Turn the ignition switch ON (II).
2. Check for DTCs with the HDS.

   Is DTC 86 indicated with DTC 83 at the same time?

   YES—Do the DTC 86 troubleshooting (see page 19-78). ■

   NO—Go to step 3.
3. Check for the fuel and emissions systems DTCs with the HDS (see page 11-3).

   Are any DTCs indicated?

   YES—Do the applicable troubleshooting for the PCM. ■

   NO—Go to step 4.
4. Clear the DTC with the HDS.
5. Turn the ignition switch OFF, then turn it ON (II) again.
6. Check for DTCs with the HDS.

   Is DTC 83 indicated?

   YES—Check for loose terminals in the VSA modulator-control unit 46P connector. Check for a loose connection at G202. If necessary, substitute a known-good VSA modulator-control unit (see page 19-97) and retest. ■

   NO—Intermittent failure, system is OK at this time. Check for loose terminals between the PCM connector A (44P), and the VSA modulator-control unit 46P connector. Check for a loose connection at G202. Refer to intermittent failures troubleshooting (see page 19-42). ■

DTC Troubleshooting (cont'd)

DTC 86: F-CAN Communication

1. Turn the ignition switch ON (II).
2. Clear the DTC with the HDS.
3. Turn the ignition switch OFF.
4. Start the engine.
5. Wait at least 5 seconds.
6. Check for DTCs with the HDS.

   Is DTC 86 indicated?

   YES—Go to step 7.

   NO—Intermittent failure, the system is OK at this time. Check for a loose connection at G202. ■

7. Check for the fuel and emissions systems DTCs with the HDS (see page 11-3).

   Are any DTCs indicated?

   YES—Do the applicable troubleshooting for the PCM. ■

   NO—Go to step 8.

8. Turn the ignition switch OFF.
9. Disconnect the yaw rate-lateral acceleration sensor 4P connector.
10. Turn the ignition switch ON (II).
11. Measure the voltage between yaw rate-lateral acceleration sensor 4P connector terminal No. 1 and body ground.

YAW RATE-LATERAL ACCELERATION SENSOR 4P CONNECTOR

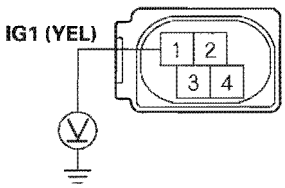

Wire side of female terminals

Is there battery voltage?

YES—Go to step 12.

NO—Repair open in the wire between No. 4 (7.5 A) fuse in the under-dash fuse/relay box and the yaw rate-lateral acceleration sensor. ■

12. Turn the ignition switch OFF.

13. Check for continuity between yaw rate-lateral acceleration sensor 4P connector terminal No. 4 and body ground.

YAW RATE-LATERAL ACCELERATION SENSOR 4P CONNECTOR

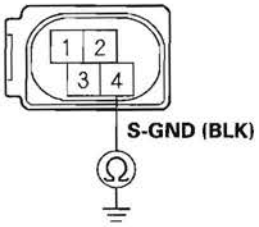

Wire side of female terminals

Is there continuity?

YES—Go to step 14.

NO—Repair open in the wire between the yaw rate-lateral acceleration sensor and body ground (G552).■

14. Check for continuity between the appropriate DLC terminals and yaw rate-lateral acceleration sensor 4P connector terminals respectively (see table).

Terminal Name	Connector Terminal No.	
	Date Link Connector (DLC)	Yaw Rate-lateral Acceleration Sensor
CAN-L	14	2
CAN-H	6	3

DATA LINK CONNECTOR (DLC)
Terminal side of female terminals

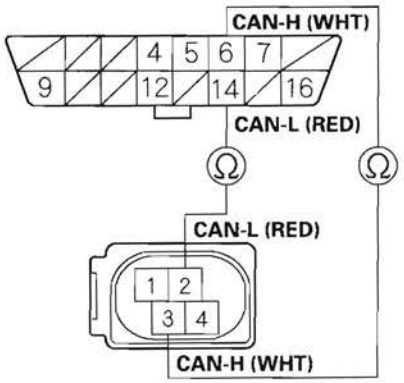

YAW RATE-LATERAL ACCELERATION SENSOR 4P CONNECTOR
Wire side of female terminals

Is there continuity?

YES—Go to step 15.

NO—Repair open in the wire between DLC and the yaw rate-lateral acceleration sensor.■

(cont'd)

DTC Troubleshooting (cont'd)

15. Disconnect the VSA modulator-control unit 46P connector.

16. Check for continuity between the appropriate VSA modulator-control unit 46P connector terminals and DLC terminals respectively (see table).

Terminal Name	Connector Terminal No.	
	VSA Modulator-control Unit	Data Link Connector (DLC)
CAN-L	38	14
CAN-H	39	6

VSA MODULATOR-CONTROL UNIT 46P CONNECTOR
Wire side of female terminals

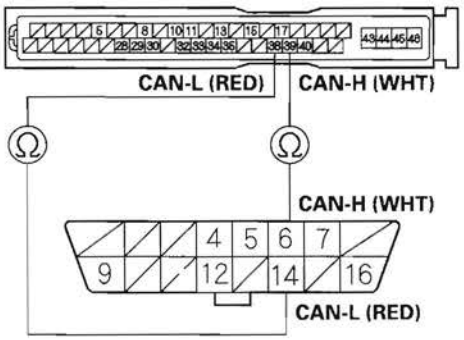

DATA LINK CONNECTOR (DLC)
Terminal side of female terminals

Is there continuity?

YES—Go to step 17.

NO—Repair open in the wire between VSA modulator-control unit and DLC. ■

17. Connect the VSA modulator-control unit 46P connector.

18. Turn the ignition switch ON (II).

19. Clear the DTC with the HDS.

20. Turn the ignition switch OFF.

21. Start the engine.

22. Wait at least 5 seconds.

23. Check for DTCs with the HDS.

Is DTC 86 indicated?

YES—Replace the VSA modulator-control unit (see page 19-97). ■

NO—The system is OK at this time. ■

DTC 87: Current Flow into Wheel Sensor Input Amplifier

1. Turn the ignition switch ON (II).
2. Clear the DTC with the HDS.
3. Turn the ignition switch OFF, then turn it ON (II) again.
4. Check for DTCs with the HDS.

   Is DTC 87 indicated?

   YES—Do the DTC 11, 13, 15, and/or 17 troubleshooting (see page 19-59). ■

   NO—Intermittent failure, the system is OK at this time. Check for loose terminals between the wheel sensor 2P connector and the VSA modulator-control unit 46P connector. Check for a loose connection at G202. Refer to intermittent failures troubleshooting (see page 19-42). ■

DTC Troubleshooting (cont'd)

DTC 88: Difference in Wheel Speed

NOTE: A wheel bearing that is installed backwards can cause this DTC.

1. Check all four tires.

   Are all four tires the correct size and properly inflated?

   YES—Go to step 2.

   NO—Install the correct tires, a known-good set of tires, or set the tires to the correct pressure, and retest by testdriving. ■

2. Test drive the vehicle.

3. Check the RF, LF, RR, LR, WHEEL SPD in the VSA DATA LIST with the HDS.

   Are all four the same indicated value?

   YES—Go to step 4.

   NO—Reinstall or replace the wheel sensor(s) (see page 19-99), and recheck by test-driving. ■

4. Check the magnetic encoders on the front wheel bearings (see page 18-12) or rear magnetic encoders on the hub bearing units (see page 18-32).

   Are they installed correctly and in good condition?

   YES—Check for loose terminals in the VSA modulator-control unit 46P connector. Check for a loose connection at G202. If necessary, substitute a known-good VSA modulator-control unit (see page 19-97) and retest. ■

   NO—Replace the front wheel bearing(s) or the rear hub bearing unit(s) and recheck by test-driving:

   - Front: Replace the front wheel bearing (see page 18-16). ■
   - Rear: Replace the rear hub bearing unit (see page 18-32). ■

DTC 91: VSA System

1. Check the brake system for leaks or mechanical problems.

   Is the brake system OK? (No brake fluid leakage, no air trapped in the brake system, no brake pads worn out.)

   YES—Go to step 2.

   NO—Repair the brake system, then recheck. ■

2. Turn the ignition switch ON (II).

3. Clear the DTC with the HDS.

4. Test-drive the vehicle in a straight line. Accelerate the vehicle up to 6 mph (10 km/h), and stop, then accelerate up to 6 mph (10 km/).

5. Check for DTCs with the HDS.

   Is DTC 91 indicated?

   YES—Check for loose terminals in the VSA modulator-control unit 46P connector. Check for a loose connection at G202. If necessary, substitute a known-good VSA modulator-control unit (see page 19-97) and retest. ■

   NO—Intermittent failure, the system is OK at this time. Check for loose terminals at the VSA modulator-control unit 46P connector. Check for a loose connection at G202. Refer to intermittent failures troubleshooting (see page 19-42). ■

DTC 113: Yaw Rate-lateral Acceleration Sensor (Power Supply)

1. Turn the ignition switch OFF.

2. Disconnect the yaw rate-lateral acceleration sensor 4P connector.

3. Turn the ignition switch ON (II).

4. Measure the voltage between body ground and yaw rate-lateral acceleration sensor 4P connector terminal No. 1.

YAW RATE-LATERAL ACCELERATION SENSOR 4P CONNECTOR

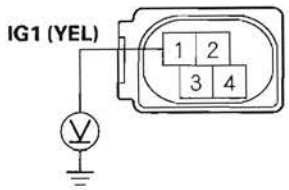

Wire side of female terminals

Is there battery voltage?

YES—Replace the yaw rate-lateral acceleration sensor (see page 19-95). ■

NO—Repair open in the wire between the No. 4 (7.5 A) fuse in the under-dash fuse/relay box and the yaw rate-lateral acceleration sensor. ■

DTC Troubleshooting (cont'd)

DTC 114: Yaw Rate-Lateral Acceleration Sensor Installation Problem

1. Turn the ignition switch ON (II).
2. Clear the DTC with the HDS.
3. Turn the ignition switch OFF, then turn it ON (II) again.
4. Check for DTCs with the HDS.

   Is DTC 114 indicated?

   YES—Replace the yaw rate-lateral acceleration sensor (see page 19-95).■

   NO—Intermittent failure, the system is OK at this time. Check for loose terminals at the yaw rate-lateral acceleration sensor 4P connector. Check for a loose connection at G552. Refer to intermittent failures troubleshooting (see page 19-42).■

DTC 121, 122, 123, 124: VSA Solenoid

1. Turn the ignition switch ON (II).
2. Clear the DTC with the HDS.
3. Turn the ignition switch OFF, then turn it ON (II) again.
4. Check for DTCs with the HDS.

   Is DTC 121, 122, 123, and/or 124 indicated?

   YES—Replace the VSA modulator-control unit (see page 19-97).■

   NO—Intermittent failure, the system is OK at this time. Check for a loose connection at G202.■

DTC 131: Yaw Rate Sensor (Software)

NOTE: Driving on an extremely angled road can cause this DTC.

1. Turn the ignition switch ON (II).
2. Check for DTCs with the HDS.

   Is DTC 91 indicated with DTC 131 at the same time?

   YES—Do the DTC 91 troubleshooting (see page 19-83).■

   NO—Go to step 3.
3. Turn the ignition switch OFF.
4. Check that the yaw rate-lateral acceleration sensor is properly mounted (see page 19-95).

   Is the yaw rate-lateral acceleration sensor installation OK?

   YES—Go to step 5.

   NO—Reinstall the yaw rate-lateral acceleration sensor, and recheck by test-driving.■
5. Put the vehicle on a level surface.
6. Turn the ignition switch ON (II).
7. Check the YAW RATE S in the VSA DATA LIST with the HDS.

   Is the indicated value within ±5 °/s?

   YES—Go to step 8.

   NO—Replace the yaw rate-lateral acceleration sensor (see page 19-95).■
8. Clear the DTC with the HDS.
9. Test-drive the vehicle around a number of corners.
10. Check for DTCs with the HDS.

    Is DTC 131 indicated?

    YES—Go to step 11.

    NO—Intermittent failure; the most probable cause is that the vehicle has been driven on an extremely angled road. The system is OK at this time.■
11. Turn the ignition switch OFF.
12. Substitute a known-good yaw rate-lateral acceleration sensor (see page 19-95).
13. Turn the ignition switch ON (II).
14. Clear the DTC with the HDS.
15. Test-drive the vehicle around a number of corners.
16. Check for DTCs with the HDS.

    Is DTC 131 indicated?

    YES—Replace the VSA modulator-control unit (see page 19-97).■

    NO—Replace the original yaw rate-lateral acceleration sensor (see page 19-95).■

DTC Troubleshooting (cont'd)

DTC 132: Lateral Acceleration Sensor (Software)

DTC 133: Lateral Acceleration Sensor (Joint Failure)

NOTE: Driving on an extremely angled road can cause this DTC.

1. Turn the ignition switch ON (II).
2. Check for DTCs with the HDS.

   Is DTC 91 indicated with DTC 132 or 133 at the same time?

   YES—Do the DTC 91 troubleshooting (see page 19-83). ■

   NO—Go to step 3.
3. Turn the ignition switch OFF.
4. Check that the yaw rate-lateral acceleration sensor is properly mounted (see page 19-95).

   Is the yaw rate-lateral acceleration sensor installation OK?

   YES—Go to step 5.

   NO—Reinstall the yaw rate-lateral acceleration sensor, and recheck by test-driving. ■
5. Put the vehicle on a level surface.
6. Turn the ignition switch ON (II).
7. Check the LATERAL ACCELERATION SENSOR in the VSA DATA LIST with the HDS.

   Is the indicated within ± 1 m/s?

   YES—Go to step 8.

   NO—Replace the yaw rate-lateral acceleration sensor (see page 19-95). ■
8. Clear the DTC with the HDS.
9. Test-drive the vehicle around a number of corners.
10. Check for DTCs with the HDS.

    Is DTC 132 or 133 indicated?

    YES—Go to step 11.

    NO—Intermittent failure; the most probable cause is that the vehicle has been driven on an extremely angled road. The system is OK at this time. ■
11. Turn the ignition switch OFF.
12. Substitute a known-good yaw rate-lateral acceleration sensor (see page 19-95).
13. Turn the ignition switch ON (II).
14. Clear the DTC with the HDS.
15. Test-drive the vehicle around a number of corners.
16. Check for DTCs with the HDS.

    Is DTC 132 or 133 indicated?

    YES—Replace the VSA modulator-control unit (see page 19-97). ■

    NO—Replace the original yaw rate-lateral acceleration sensor (see page 19-95). ■

DTC 134: Steering Angle Sensor (Software)

1. Turn the ignition switch ON (II).
2. Check for DTCs with the HDS.

   Is DTC 91 indicated with DTC 134 at the same time?

   YES—Do the DTC 91 troubleshooting (see page 19-83). ■

   NO—Go to step 3.
3. With the vehicle on the ground, set the front wheels in the straight ahead driving position.
4. Check Z-PHASE in the VSA DATA LIST with the HDS.

   Is there about 1.0 V or less with the steering wheel straight ahead?

   YES—Go to step 5.

   NO—Go to step 7.
5. Start the engine.
6. Turn the steering wheel left and right at 90 degrees or more. Check the STEERING ANGLE in the VSA DATA LIST with the HDS.

   Is there ±90 ° or more?

   YES—Go to step 7.

   NO—Replace the steering angle sensor (see page 19-94). ■
7. Turn the ignition switch OFF.
8. Check the installation of the steering angle sensor.

   Is the steering angle sensor installed correctly?

   YES—Go to step 15.

   NO—Go to step 9.
9. Reinstall the steering angle sensor.
10. Turn the ignition switch ON (II).
11. Clear the DTCs with the HDS.
12. Test-drive the vehicle around a number of corners.
13. Check for DTCs with the HDS.

    Is DTC 134 indicated?

    YES—Go to step 14.

    NO— The system is OK at this time. ■
14. Turn the ignition switch OFF.
15. Substitute a known-good steering angle sensor.
16. Turn the ignition switch ON (II).
17. Clear the DTCs with the HDS.
18. Test-drive the vehicle around a number of corners.
19. Check for DTCs with the HDS.

    Is DTC 134 indicated?

    YES—Check for loose terminals in the VSA modulator-control unit 46P connector. Check for a loose connection at G202. If necessary, substitute a known-good VSA modulator-control unit (see page 19-97) and retest. ■

    NO—Replace the original steering angle sensor (see page 19-94). ■

DTC Troubleshooting (cont'd)

DTC 137: VSA Pressure Sensor (Software)

1. Turn the ignition switch OFF (II).
2. Disconnect the brake pedal position switch 4P connector.
3. Do the brake pedal position switch test (see page 22-166).

   Is the switch OK?

   YES—Go to step 4.

   NO—Replace the brake pedal position switch (see page 19-6). ■
4. Short the SCS line with the HDS.
5. Disconnect the PCM connector A (44P).
6. Turn the ignition switch ON (II).
7. Measure the voltage between PCM connector A (44P) terminal No. 40 and body ground.

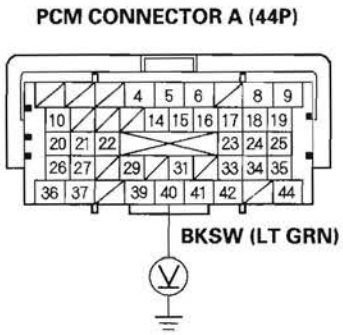

Terminal side of female terminals

   Is there 0.1 V or more when the brake pedal released?

   YES—Repair short to power in the wire between the brake pedal position switch and the PCM. ■

   NO—Go to step 8.
8. Turn the ignition switch OFF.
9. Substitute a known-good PCM (see page 11-8).
10. Turn the ignition switch ON (II).
11. Clear the DTCs with the HDS.
12. Test-drive the vehicle at 8 mph (12 km/h) for 60 seconds or more.
13. Check for DTCs with the HDS.

    Is DTC 137 indicated?

    YES—Check for loose terminals in the VSA modulator-control unit 46P connector. Check for a loose connection at G202. If necessary, substitute a known-good VSA modulator-control unit (see page 19-97) and retest. ■

    NO—Replace the original PCM (see page 11-219). ■

DTC 138: Brake Pedal Position Switch Stuck OFF (Software)

1. Turn the ignition switch OFF.
2. Check the No. 12 (15 A) fuse in the under-hood fuse/relay box.

   Is the fuse OK?

   YES—Reinstall the fuse, and go to step 3.

   NO—Replace the fuse, and recheck. If the fuse is blown, check for a short to body ground in the brake pedal position switch circuit. ■
3. Disconnect the brake pedal position switch 4P connector.
4. Measure the voltage between brake pedal position switch 4P connector terminal No. 1 and body ground.

BRAKE PEDAL POSITION SWITCH 4P CONNECTOR

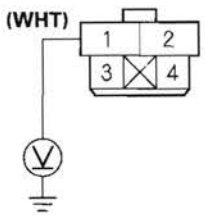

Wire side of female terminals

Is there battery voltage?

YES—Go to step 5.

NO—Repair open in the wire between the No. 12 (15 A) fuse in the under-hood fuse/relay box and the brake pedal position switch. ■

5. Short the SCS line with the HDS.
6. Disconnect the PCM connector A (44P).
7. Check for continuity between brake pedal position switch 4P connector terminal No. 2 and PCM connector A (44P) terminal No. 40.

PCM CONNECTOR A (44P)
Terminal side of female terminals

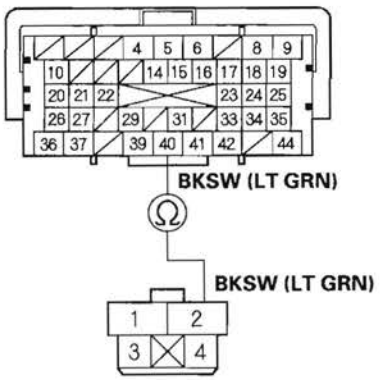

BRAKE PEDAL POSITION SWITCH 4P CONNECTOR
Wire side of female terminals

Is there continuity?

YES—Go to step 8.

NO—Repair open in the wire between the PCM and the brake pedal position switch. ■

(cont'd)

DTC Troubleshooting (cont'd)

8. Do the brake pedal position switch test (see page 22-166).

   Is the switch OK?

   YES—Go to step 9.

   NO—Replace the brake pedal position switch (see page 19-6). ■

9. Substitute a known-good PCM (see page 11-8).

10. Start the engine, then press the brake pedal slowly and hard.

11. Check for DTCs with the HDS.

    Is DTC 138 indicated?

    YES—Check for loose terminals in the VSA modulator-control unit 46P connector. Check for a loose connection at G202. If necessary, substitute a known-good VSA modulator-control unit (see page 19-97) and retest. ■

    NO—Replace the original PCM (see page 11-219). ■

Symptom Troubleshooting

VSA activation indicator does not go off, and no DTCs are stored

1. Turn the ignition switch ON (II), and watch the VSA activation indicator.

   Does VSA activation indicator go off within 2 seconds?

   YES—The system is OK at this time. ■

   NO—Go to step 2.

2. Turn the ignition switch OFF.

3. Disconnect the VSA OFF switch 5P connector.

4. Check the VSA OFF switch (see page 19-96).

   Is the VSA OFF switch OK?

   YES—Go to step 5.

   NO—Replace the VSA OFF switch (see page 19-96). ■

5. Remove the gauge control module (see page 22-248).

6. Disconnect gauge control module connector B (36P).

7. Check for continuity between VSA OFF switch 5P connector terminal No. 2 and body ground.

VSA OFF SWITCH 5P CONNECTOR

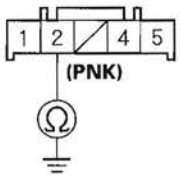

Wire side of female terminals

Is there continuity?

YES—Repair short to body ground between the gauge control module and the VSA OFF switch. ■

NO—Substitute a known-good gauge control module, then go to step 1 and recheck. If it is OK, replace the original gauge control module (see page 22-248). ■

Symptom Troubleshooting (cont'd)

ABS indicator, brake system indicator, and VSA indicator do not go off at the same time

1. Turn the ignition switch OFF.
2. Check the No. 4 (7.5 A) fuse in the under-dash fuse/relay box.

   Is the fuse blown?

   YES—Install a new No. 4 (7.5 A) fuse, and recheck. ■

   NO—Reinstall the checked fuse, then go to step 3.
3. Disconnect the VSA modulator-control unit 46P connector.
4. Turn the ignition switch ON (II).
5. Measure the voltage between VSA modulator-control unit 46P connector terminal No. 40 and body ground.

VSA MODULATOR-CONTROL UNIT 46P CONNECTOR

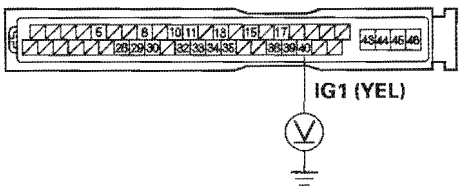

Wire side of female terminals

Is there battery voltage?

YES—Go to step 6.

NO—Repair open in the wire between the No. 4 (7.5 A) fuse in the under-dash fuse/relay box and the VSA modulator-control unit. ■

6. Turn the ignition switch OFF.
7. Check for continuity between VSA modulator-control unit 46P connector terminal No. 43 and body ground.

VSA MODULATOR-CONTROL UNIT 46P CONNECTOR

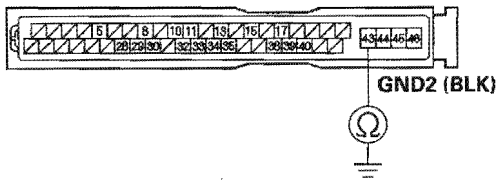

Wire side of female terminals

Is there continuity?

YES—Go to step 8.

NO—Repair open in the wire between the VSA modulator-control unit and body ground (G202). ■

8. Disconnect gauge control module connector B (36P).

9. Check for continuity between the appropriate VSA modulator-control unit 46P connector terminals and gauge control module connector B (36P) terminals respectively (see table).

Terminal Name	Connector Terminal No.	
	VSA Modulator-control Unit	Gauge Control Module
CAN-L	38	33
CAN-H	39	34

VSA MODULATOR-CONTROL UNIT 46P CONNECTOR
Wire side of female terminals

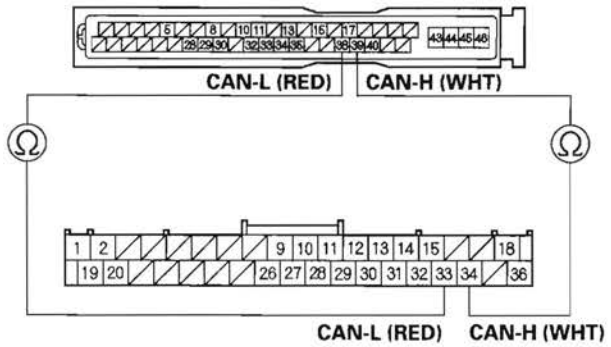

GAUGE CONTROL MODULE CONNECTOR B (36P)
Wire side of female terminals

Is there continuity?

YES—Check for loose terminals in the VSA modulator-control unit 46P connector. Check for a loose connection at G202. If necessary, substitute a known-good VSA modulator-control unit (see page 19-97) and retest. ■

NO—Repair open in the wire between the gauge control module and the VSA modulator-control unit. ■

Steering Angle Sensor Replacement

NOTE: Do not damage or drop the combination switch as the steering angle sensor is sensitive to shock and vibration.

1. Remove the steering wheel (see page 17-22).
2. Remove the steering column covers (see page 20-107) and the cable reel (see page 24-173).
3. Remove the combination switch assembly (see page 17-25).
4. Remove the combination light switch (A) and the wiper/washer switch (B).

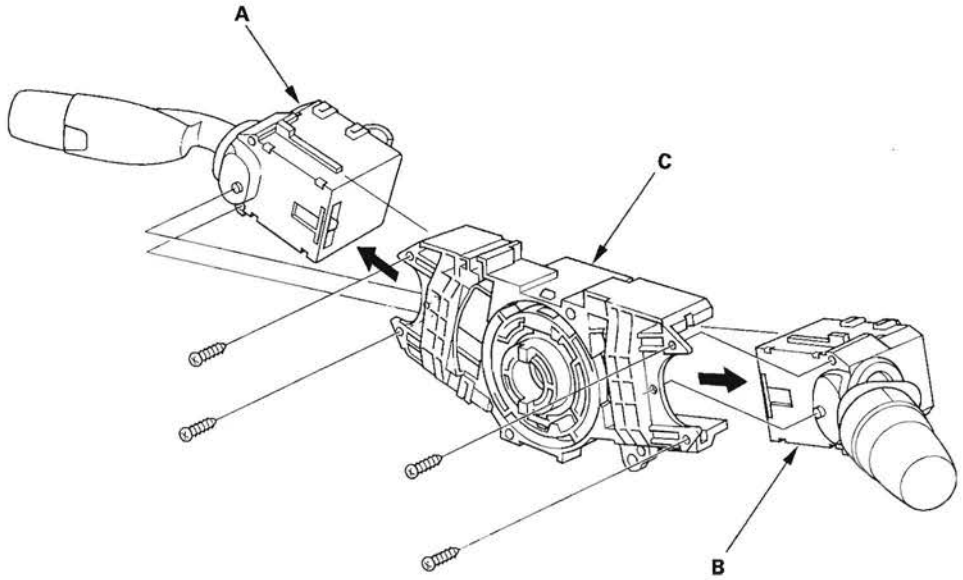

5. Replace the combination switch body (C).
6. Install the combination switch in the reverse order of removal.

NOTE:
- Do not remove the steering angle sensor from the combination switch body.
- When installing the cable reel, set the turn signal canceling sleeve position (see page 24-173).

Yaw Rate-Lateral Acceleration Sensor Replacement

NOTE:
- Do not damage or drop the sensor as it is sensitive.
- Do not use air or electric impact tools.

1. Turn the ignition switch OFF.
2. Remove both sides of the center lower cover (see page 20-95).
3. Disconnect the yaw rate-lateral acceleration sensor 4P connector (A).

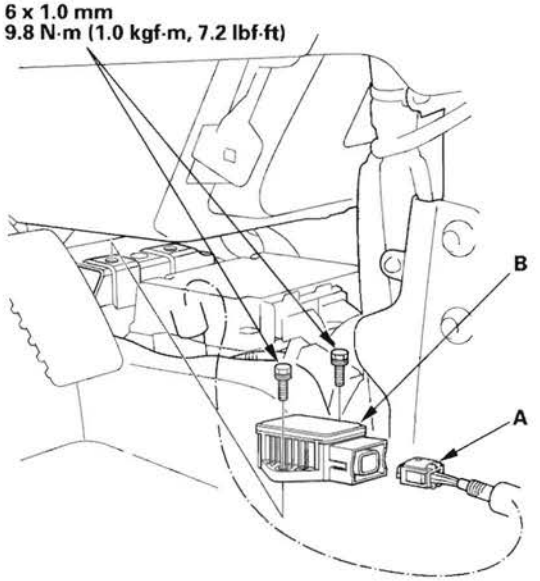

4. Remove the sensor mounting bolts, and remove the yaw rate-lateral acceleration sensor (B).
5. Install in the reverse order of removal.

VSA Off Switch Test

1. Turn the ignition switch OFF.
2. Remove the power mirror switch (A) (see page 22-273), then disconnect the VSA OFF switch 5P connector (B).

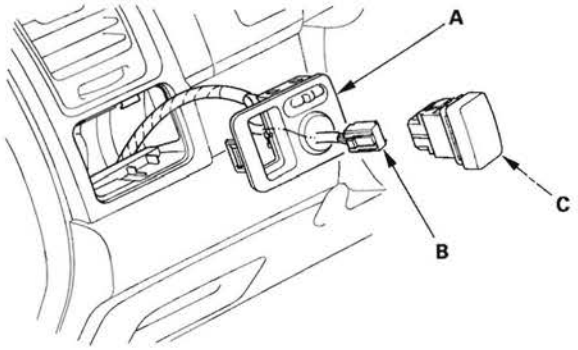

3. Push out the VSA OFF switch (C) from the back of the switch panel.
4. Check for continuity between the VSA OFF switch 5P connector terminal No. 1 and No. 2. There should be continuity when the switch is pressed, and no continuity when the switch is released.

VSA OFF SWITCH 5P CONNECTOR

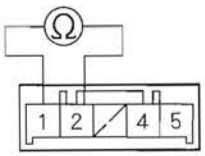

Terminal side of male terminals

5. Check for continuity between the VSA OFF switch 5P connector terminal No. 4 and No. 5. There should be continuity at all times.

VSA OFF SWITCH 5P CONNECTOR

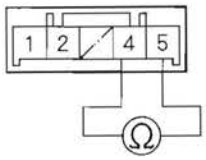

Terminal side of male terminals

VSA Modulator-Control Unit Removal and Installation

NOTE:
- Do not spill brake fluid on the vehicle; it may damage the paint; if brake fluid gets on the paint, wash it off immediately with water.
- Be careful not to damage or deform the brake lines during removal and installation.
- To prevent the brake fluid from flowing, plug and cover the hose ends and joints with a shop towel or equivalent material.

Removal

1. Turn the ignition switch OFF.

2. Disconnect the VSA modulator-control unit 46P connector (A) by pulling up the lock (B); the connector disconnects itself.

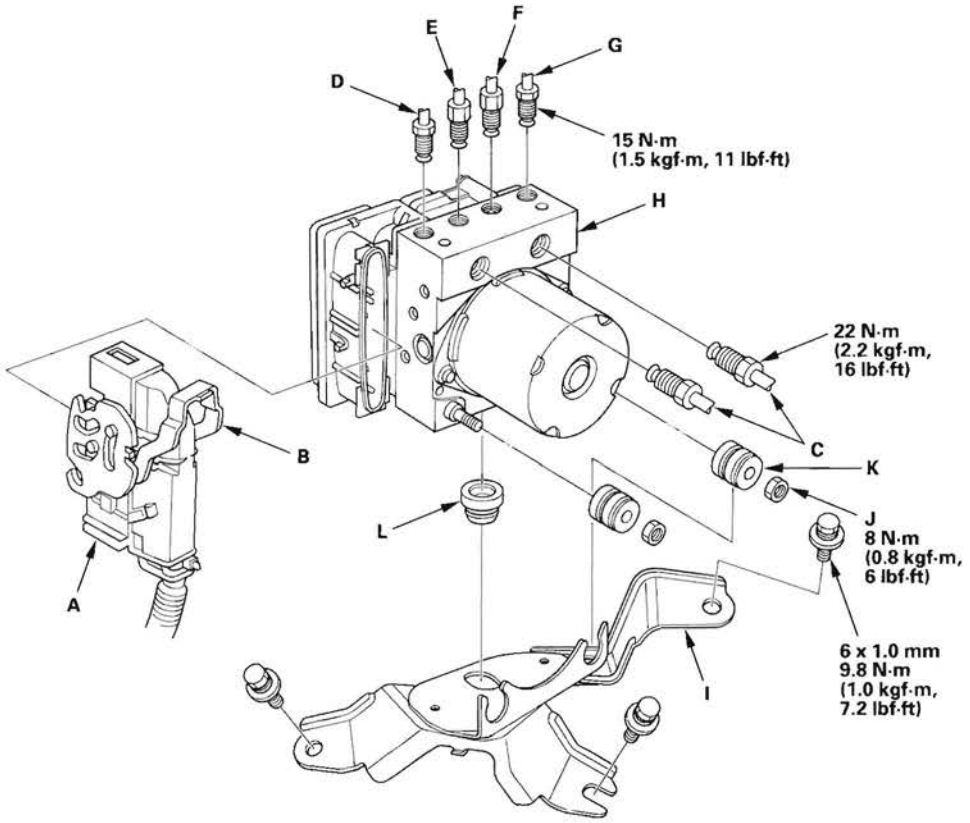

3. Disconnect the six brake lines from the VSA modulator-control unit.

   NOTE: Brake lines are connected to the master cylinder (C) and to the right-front (D), the left-rear (E), the right-rear (F), and the left-front (G) brake systems.

4. Remove the VSA modulator-control unit (H) with the bracket (I) from the body.

5. Remove the locknuts (J), then remove the VSA modulator-control unit from the bracket.

   NOTE: During installation, install a new bushing (K) and new grommet (L). Otherwise, unwanted noise and vibration may be transmitted to the vehicle.

(cont'd)

VSA Modulator-Control Unit Removal and Installation (cont'd)

Installation

1. Install the new bushing and new grommets. (Otherwise, unwanted noise and vibration may be transmitted to the vehicle.)
2. Install the VSA modulator-control unit on the bracket, then install new locknuts.
3. Install the bracket with the VSA modulator-control unit.
4. Reconnect the six brake lines, then tighten the flare nuts with the specified torque.
5. Align the connecting surface of the VSA modulator-control unit 46P connector to the VSA modulator-control unit.
6. Lower the lock of the VSA modulator-control unit 46P connector, then confirm the connector is fully seated.
7. Bleed the brake system (see page 19-9).
8. Start the engine, and check that the ABS and the VSA indicators go off.
9. Test-drive the vehicle, and check that the ABS and VSA indicators do not come on.

   NOTE: If the brake pedal is spongy, there may be air trapped in the modulator and then induced into the normal brake system during modulation. Bleed the brake system again (see page 19-9).

Wheel Sensor Replacement

Front

1. Turn the ignition switch OFF.
2. Release the connector holding clamps (A), then disconnect the wheel sensor connector (B).

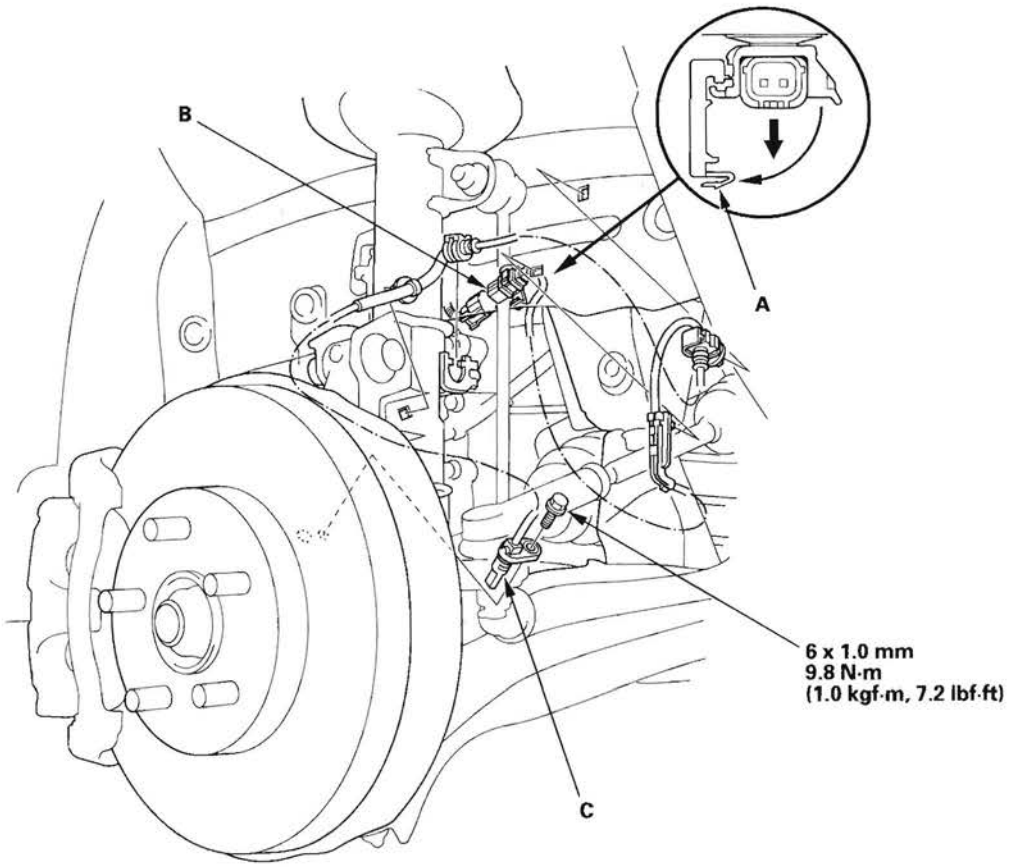

3. Remove the clips, the bolt and the wheel sensor (C).
4. Install the wheel sensor in the reverse order of removal, and note these items:
   - Install the sensor carefully to avoid twisting the wires.
   - If the wheel sensor comes in contact with the wheel bearing, it is faulty.
5. Start the engine, and check that the ABS and the VSA indicators go off.
6. Test-drive the vehicle, and check that the ABS and the VSA indicators do not come on.

(cont'd)

Wheel Sensor Replacement (cont'd)

Rear

1. Turn the ignition switch OFF.
2. Release the connector holding clamps (A), then disconnect the wheel sensor connector (B).

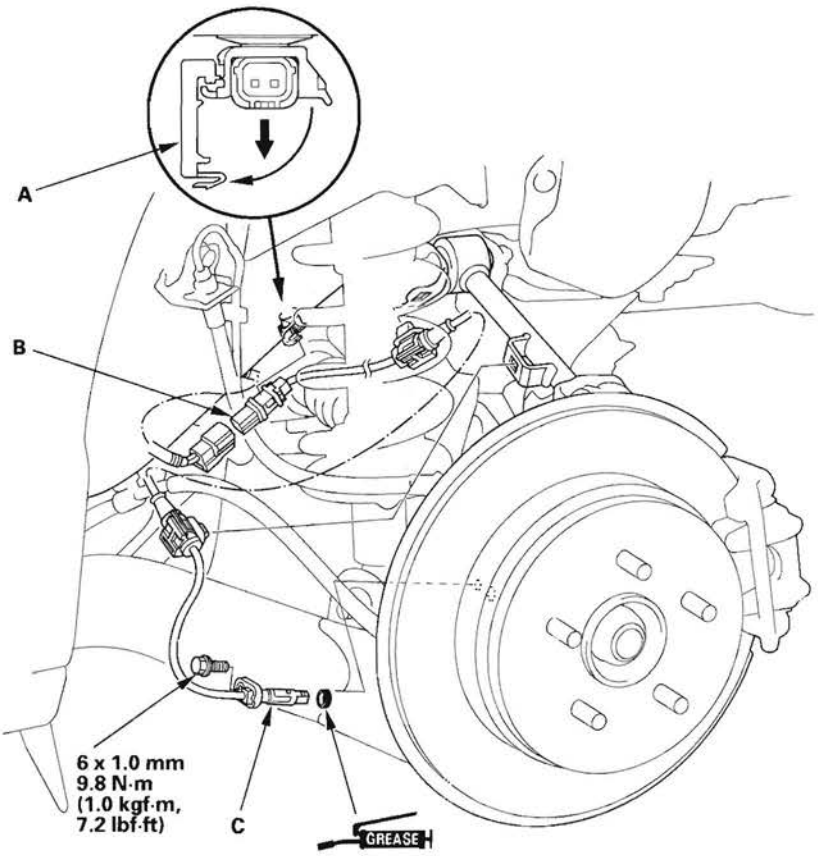

3. Remove the clips, the bolt and the wheel sensor (C).
4. Install the wheel sensor in the reverse order of removal, and note these items:
   - Apply multipurpose grease to the O-ring (C).
   - Install the sensor carefully to avoid twisting the wires.
   - If the wheel sensor comes in contact with the hub bearing unit, it is faulty.
5. Start the engine, and check that the ABS and the VSA indicators go off.
6. Test-drive the vehicle, and check that the ABS and the VSA indicators do not come on.

SUPPLEMENTAL RESTRAINT SYSTEM (SRS) (If body maintenance is required)

The CR-V SRS includes a driver's airbag in the steering wheel hub, a passenger's airbag in the dashboard above the glove box, seat belt tensioners in the front seat belt retractors, seat belt buckle tensioners in the front seat belt buckles, side curtain airbags in the sides of the roof, and side airbags in the front seat-backs. Information necessary to safely service the SRS is included in this Service Manual. Items marked with an asterisk (*) on the contents page include or are located near SRS components. Servicing, disassembling, or replacing these items require special precautions and tools, and should be done only by an authorized Honda dealer.

- To avoid rendering the SRS inoperative, which could lead to personal injury or death in the event of a severe frontal or side collision, all SRS service work should be done by an authorized Honda dealer.
- Improper service procedures, including incorrect removal and installation of the SRS, could lead to personal injury caused by unintentional deployment of the airbags and/or side airbags.
- Do not bump or impact the SRS unit, front impact sensors, or side impact sensors when the ignition switch is ON (II), or for at least 3 minutes after the ignition switch is turned OFF; otherwise, the system may fail in a collision, or the airbags may deploy.
- SRS electrical connectors are identified by yellow color coding. Related components are located in the steering column, front console, dashboard, dashboard lower panel, in the dashboard above the glove box, in the front seats, in the roof side, and around the floor. Do not use electrical test equipment on these circuits.



Body

Doors

Component Location Index-Front Door 20-2
Component Location Index-Rear Door 20-4
Front Door Panel Removal/Installation 20-6
Front Door Outer Handle Replacement 20-8
Front Door Latch Replacement 20-11
Front Door Glass and Regulator Replacement 20-13
Front Door Glass Outer Weatherstrip Replacement 20-14
Front Door Outer Molding Replacement 20-15
Front Door Weatherstrip Replacement 20-16
Rear Door Panel Removal/Installation 20-17
Rear Door Outer Handle Replacement 20-19
Rear Door Latch Replacement 20-21
Rear Door Glass and Regulator Replacement 20-23
Rear Door Rear Sash Trim Replacement 20-26
Rear Door Glass Outer Weatherstrip Replacement 20-27
Rear Door Outer Molding Replacement ... 20-27
Rear Door Weatherstrip Replacement 20-28
Front and Rear Door Glass Adjustment ... 20-29
* Front and Rear Door Position Adjustment 20-30
Front and Rear Door Striker Adjustment 20-31

Mirrors

Component Location Index 20-32
Power Mirror Replacement 20-33
Mirror Holder Replacement 20-34
Rearview Mirror Replacement 20-35

Glass

Component Location Index 20-36
Windshield Replacement 20-38
Rear Window Replacement 20-43
Quarter Glass Replacement 20-48

Moonroof

Component Location Index 20-54
Symptom Troubleshooting Index 20-55
Glass Position Adjustment 20-56
Glass Replacement 20-56
Wind Deflector Replacement 20-57
Drain Channel Replacement 20-58
Sunshade Replacement 20-59
Motor Replacement 20-60
* Frame and Drain Tube Replacement 20-61
Drain Channel Slider and Cable Assembly Replacement 20-63
Closing Force and Opening Drag Check ... 20-65

Interior Trim

Component Location Index 20-66
* Trim Removal/Installation-Door Areas 20-67
* Trim Removal/Installation-Pillar Areas 20-69
* Trim Removal/Installation -Rear Side Area 20-75
Trim Removal/Installation-Cargo Area 20-77
Trim Removal/Installation -Tailgate Area 20-78
Sunvisor Removal/Installation 20-80
Grab Handle Removal/Installation 20-81
* Headliner Removal/Installation 20-83
* Carpet Replacement 20-87

Consoles

* Center Console Removal/Installation 20-89
Center Console Disassembly/Reassembly 20-90

Dashboard

Center Upper Dashboard Panel Removal/Installation 20-93
Dashboard Center Vent Removal/Installation 20-93
Shift Lever Panel Removal/Installation 20-95
Dashboard Center Lower Cover Removal/Installation 20-95
Dashboard Center Trim Removal/Installation 20-96
Instrument Upper Visor Removal/Installation 20-96
Instrument Panel Removal/Installation 20-97
Driver's Vent Panel Removal/Installation 20-98
Driver's Inner Dashboard Trim Removal/Installation 20-99
Driver's Outer Dashboard Trim Removal/Installation 20-100
Driver's Dashboard Undercover Removal/Installation 20-100
Driver's Dashboard Lower Cover Removal/Installation 20-101
Front Console Cover Removal/Installation 20-102
Passenger's Tray Removal/Installation 20-102
Passenger's Vent Panel Removal/Installation 20-104
Passenger's Dashboard Undercover Removal/Installation 20-105
Glove Box Removal/Installation 20-105
Glove Box Damper Replacement 20-106
Glove Box Striker Replacement 20-106
Dashboard Glove Box Cover Removal/Installation 20-107
Column Cover Removal/Installation 20-107
* Dashboard/Steering Hanger Beam Removal/Installation 20-109
Dashboard Replacement 20-114

Seats

Component Location Index 20-116
Front Seat Active Head Restraint Inspection 20-117
* Front Seat Removal/Installation 20-118
Front Seat Center Table Replacement 20-120
Front Seat Armrest Replacement 20-121
Front Seat Frame Replacement 20-122
* Front Seat-back Cover/Pad Replacement 20-125
Front Seat Under Tray Replacement 20-128
Front Seat Recline Cover Removal/Installation 20-129
* Front Seat Cushion Cover/Pad Replacement 20-130
Rear Seat Armrest Replacement 20-133
Rear Seat Armrest Cover Replacement 20-134
Rear Seat Removal/Installation 20-135
Right Rear Seat Cover Replacement 20-136
Left Rear Seat Cover Replacement 20-143
Right Rear Seat-back Lock Control Cable Replacement 20-148

Bumpers

Front Bumper Removal/Installation 20-149
Front Bumper Disassembly/Reassembly 20-151
Rear Bumper Removal/Installation 20-151
Rear Bumper Disassembly/Reassembly 20-153
Rear Bumper Reflector Replacement 20-154

Hood

Hood Adjustment 20-155
Hood Seal Replacement 20-156
Hood Insulator Replacement 20-157

Tailgate

Tailgate Adjustment 20-158
Tailgate Support Strut Replacement 20-159
Tailgate Weatherstrip Replacement 20-160

Fuel Fill Door

Fuel Fill Door Adjustment 20-161
Fuel Cap Adapter Replacement 20-162

Exterior Trim

Upper Front Grille Replacement 20-163
Lower Front Grille Replacement 20-164
Front Fender Trim Replacement 20-165
Front Bulkhead Cover Replacement 20-165
A-Pillar Corner Trim Replacement 20-166
Cowl Cover Replacement 20-167
Door Lower Trim Replacement 20-168
Side Windshield Trim Replacement 20-171
Front Roof Side Trim Replacement 20-173
Rear Roof Side Trim Replacement 20-174
Upper Tailgate Trim Replacement 20-175
Front Bumper Side Trim Replacement 20-176
Side Sill Panel Replacement 20-177
Rear License Trim Replacement 20-178
Tailgate Lower Trim Replacement 20-179
Emblem/Sticker Replacement 20-180

Fenderwell

Front Inner Fender Replacement 20-181
Front Splash Shield Replacement 20-182
Front Fender Fairing Replacement 20-183
Fuel Pipe Protector Replacement 20-184
Rear Splash Guard Replacement 20-184
Front Wheel Arch Protector Replacement 20-185
Rear Wheel Arch Protector Replacement 20-186
Rear Strake Replacement 20-187
Rear Air Outlet Replacement 20-188
Middle Under-floor Cover Replacement 20-188

Openers

Component Location Index 20-189
Fuel Fill Door Opener Cable Replacement 20-190
Hood Opener Cable Replacement 20-192
Fuel Fill Door Opener Replacement 20-193
Hood Latch Replacement 20-193
Hood Release Handle Replacement 20-194
Tailgate Latch Replacement 20-195

Frame

Under-cowl Panel Replacement 20-196
Upper Dashboard Support Gusset Replacement 20-197
Rear Damper Gusset Replacement 20-197
Subframe Replacement 20-198
Frame Repair Chart 20-200

Component Location Index - Front Door

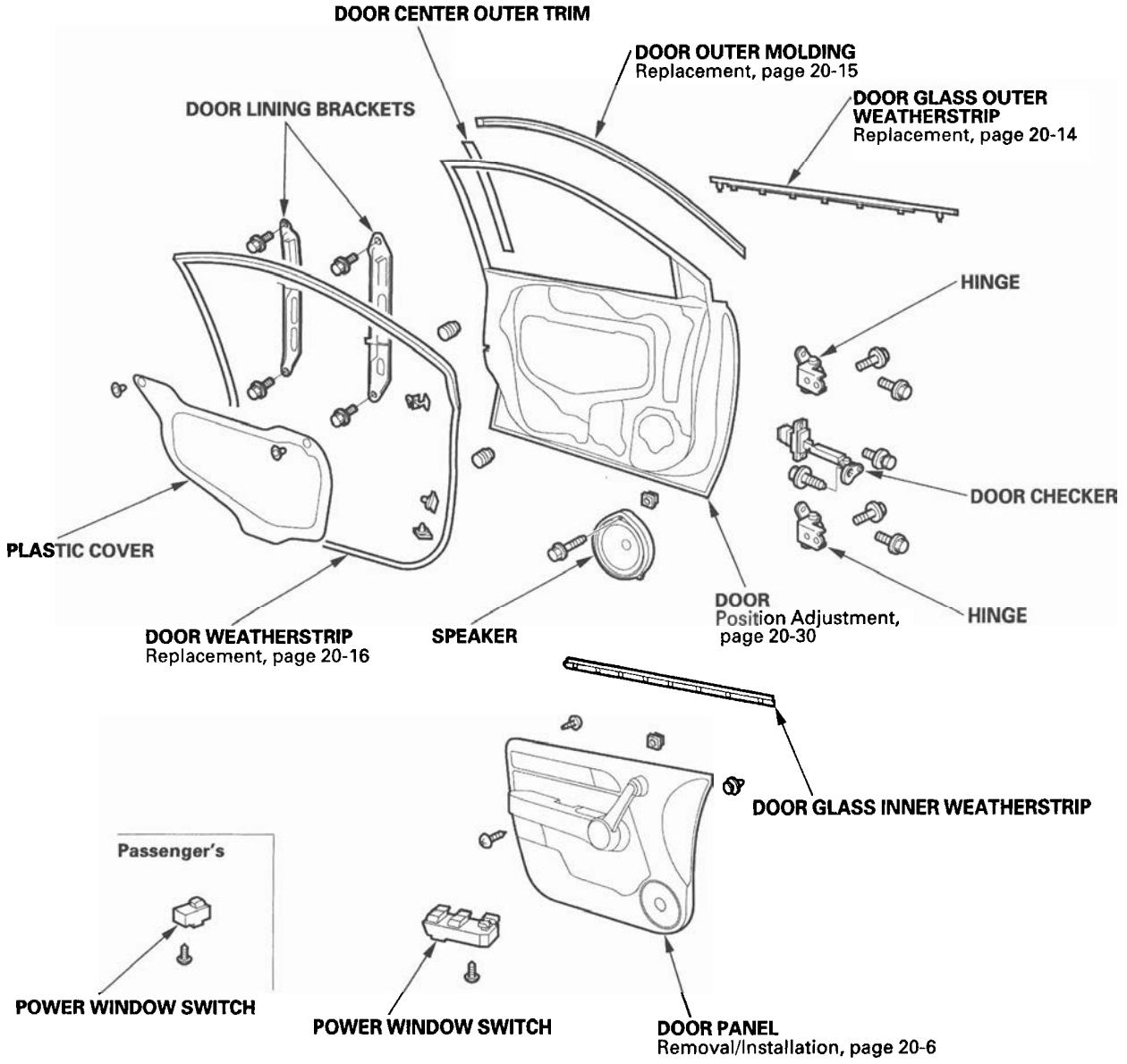

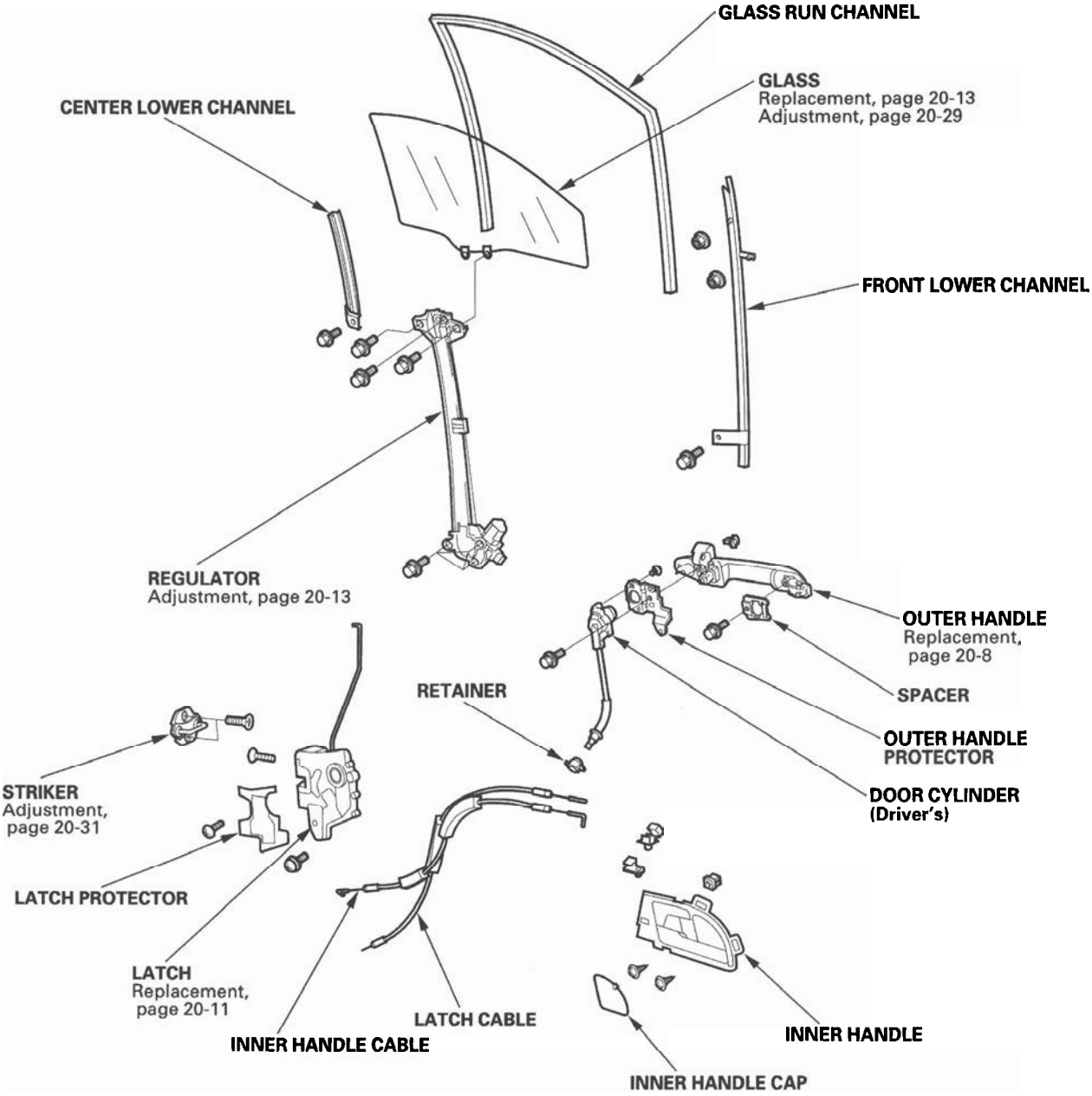
GLASS RUN CHANNEL
GLASS
Replacement, page 20-13
Adjustment, page 20-29
CENTER LOWER CHANNEL
FRONT LOWER CHANNEL
REGULATOR
Adjustment, page 20-13
OUTER HANDLE
Replacement, page 20-8
SPACER
RETAINER
OUTER HANDLE PROTECTOR
DOOR CYLINDER (Driver's)
STRIKER
Adjustment, page 20-31
LATCH PROTECTOR
LATCH
Replacement, page 20-11
LATCH CABLE
INNER HANDLE CABLE
INNER HANDLE
INNER HANDLE CAP

Component Location Index - Rear Door

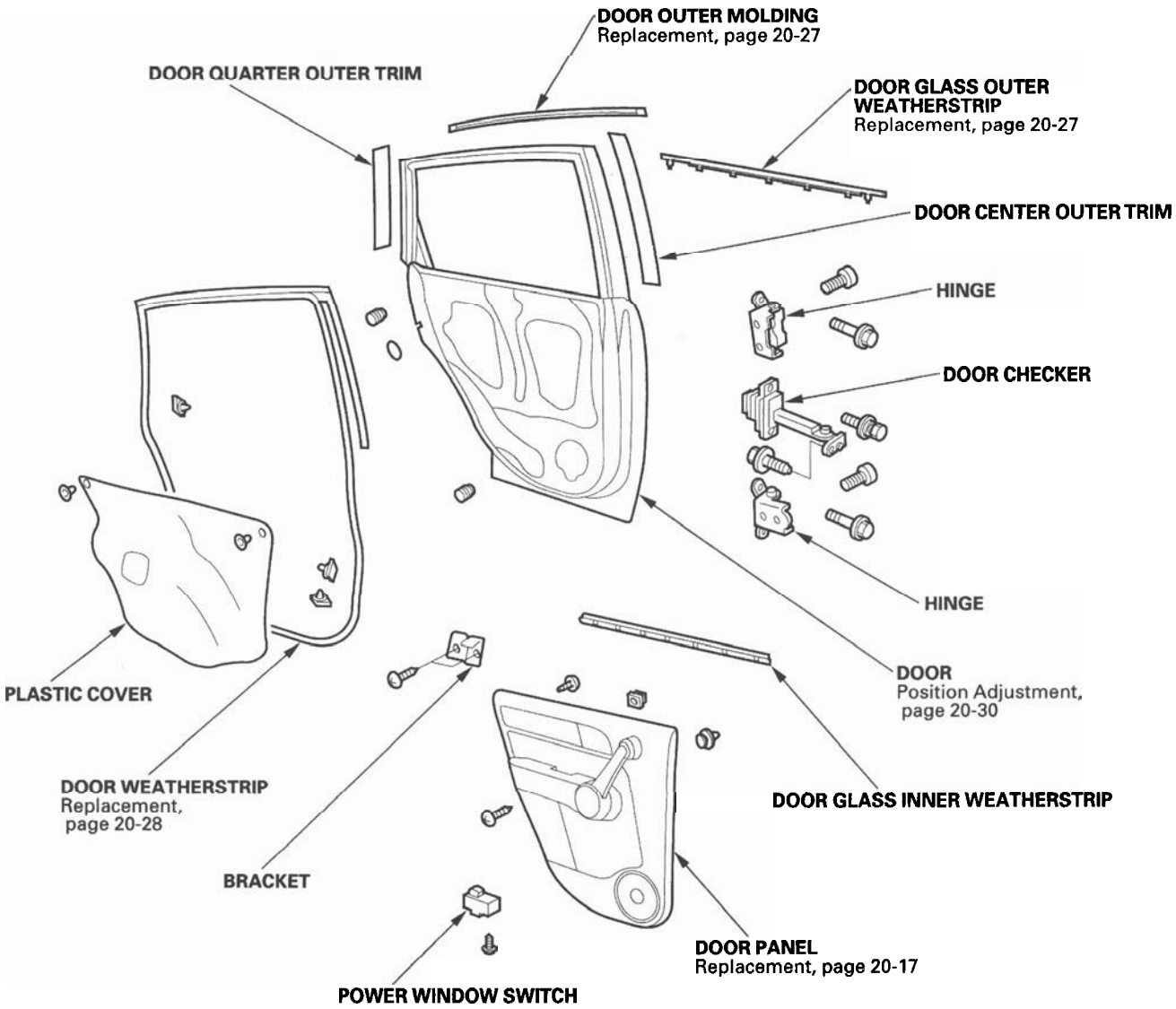

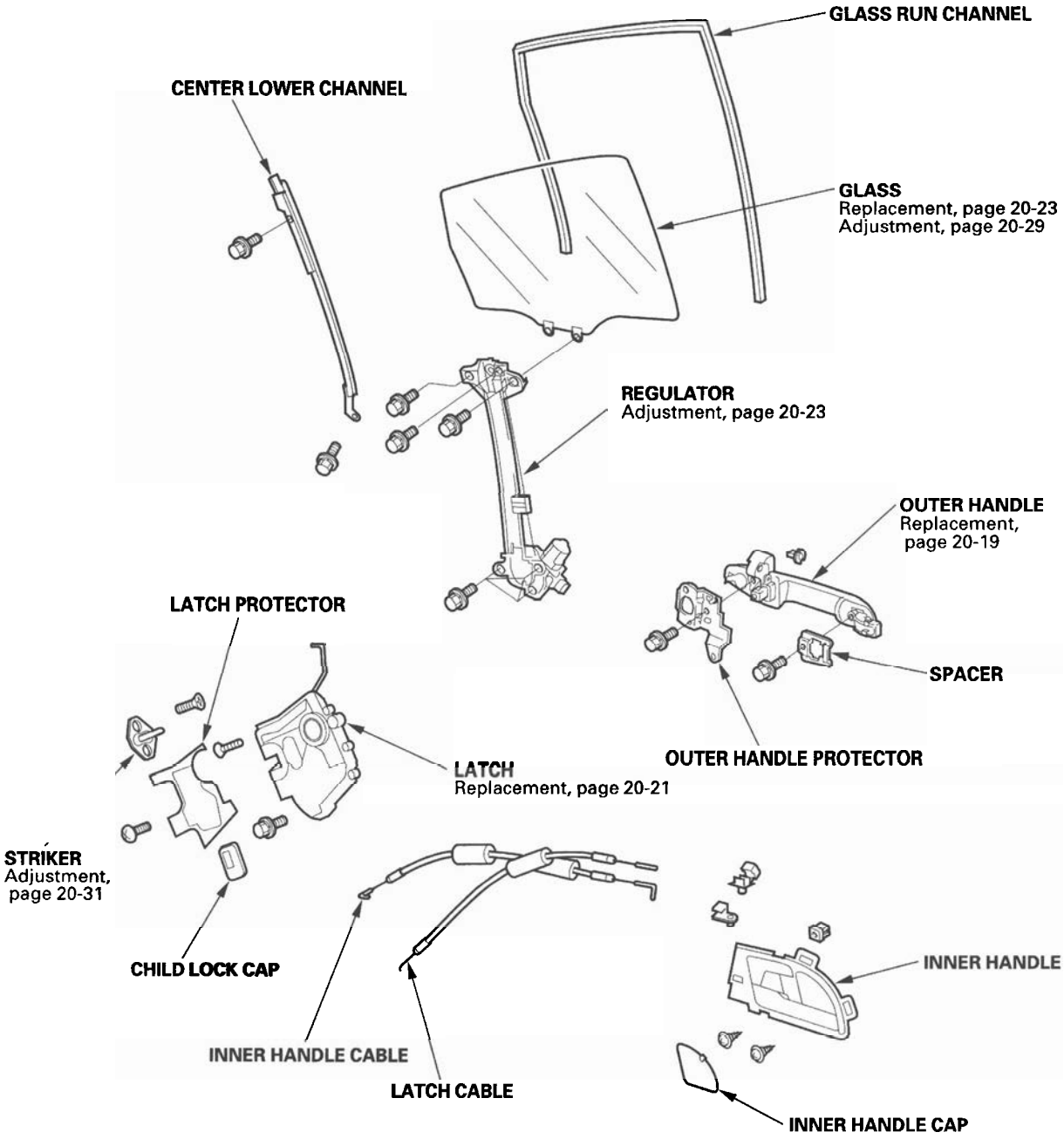
GLASS RUN CHANNEL
CENTER LOWER CHANNEL
GLASS
Replacement, page 20-23
Adjustment, page 20-29
REGULATOR
Adjustment, page 20-23
OUTER HANDLE
Replacement,
page 20-19
LATCH PROTECTOR
SPACER
OUTER HANDLE PROTECTOR
LATCH
Replacement, page 20-21
STRIKER
Adjustment,
page 20-31
CHILD LOCK CAP
INNER HANDLE
INNER HANDLE CABLE
LATCH CABLE
INNER HANDLE CAP

Front Door Panel Removal/Installation

Special Tools Required
- KTC trim tool set SOJATP2014 *
- Trim pad remover, Snap-on A 177A or equivalent, commercially available

* Available through the American Honda Tool and Equipment Program; call 888-424-6857

NOTE:
- Use the appropriate tool from the KTC trim tool set to avoid damage when prying components.
- Take care not to scratch the door and related parts.

1. Raise the glass fully.
2. Using the appropriate trim tool, pry out on the under portion of the inner handle cap (A) to release the hooks (B, C).

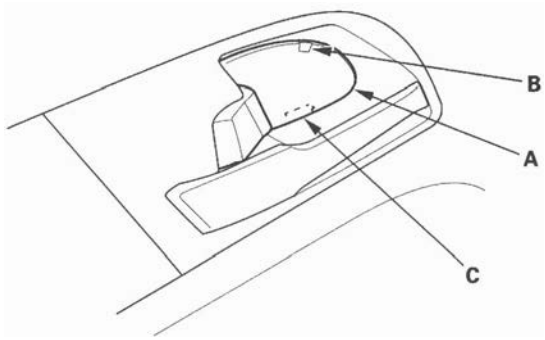

3. Remove the screws from the inner handle (A).

Fastener Locations
▶ : Screw, 2

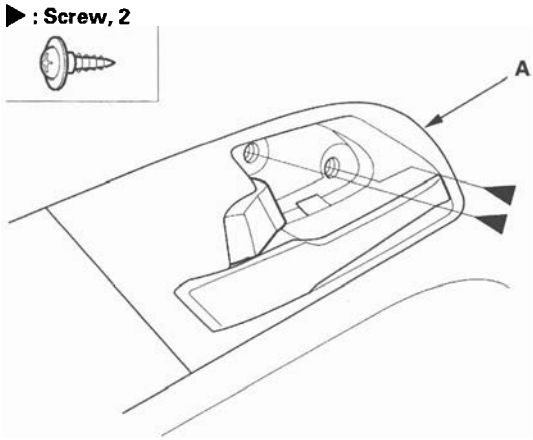

4. Using the appropriate trim tool, pry out on the upper cap (A) of the front door grip to release the hooks (B). Then remove the screw (C).

Fastener Locations
C ▶ : Screw, 1 F ▶ : Screw, 1

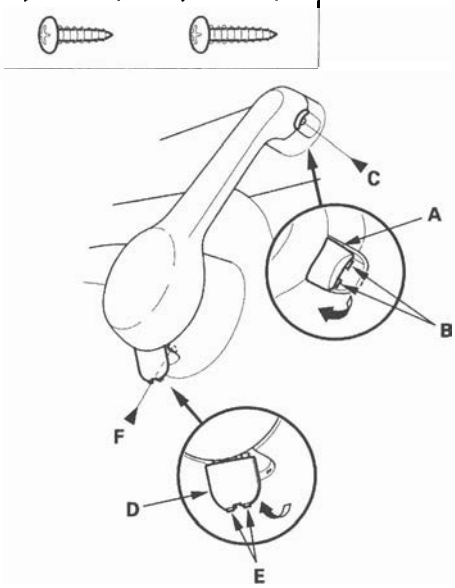

5. Using the appropriate trim tool, pry out on the lower cap (D) of the front door grip to release the hooks (E). Then remove the screw (F).
6. Using the appropriate trim tool, pry out on the cover (A) in the door pocket to release the hooks (B). Then remove the cover, and screw.

Fastener Location
▶ : Screw, 1

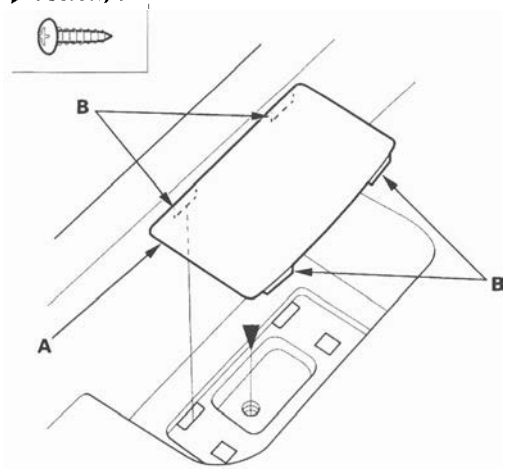

7. Remove the mirror mount cover (see step 2 on page 20-33).

8. Remove the door panel (A) with as little bending as possible to avoid creasing or breaking it.

   -1 Start at the bottom edge of the door panel, release the clips with a commercially available trim pad remover.
   -2 Detach the upper clips (B, C).
   -3 Starting at the rear, pull the door panel upward.

   NOTE: The inner handle cable and latch cable are connected to the inner handle (D). Do not pull the door panel up too far, or these cables will be damaged.

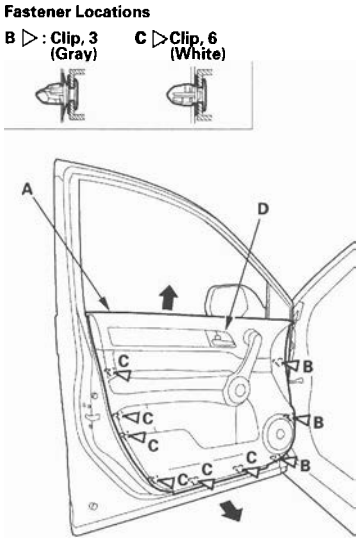

9. While holding the door panel (A) away from the door, remove the inner handle (B) from the door panel by detaching the clips (C). Remove the door panel.

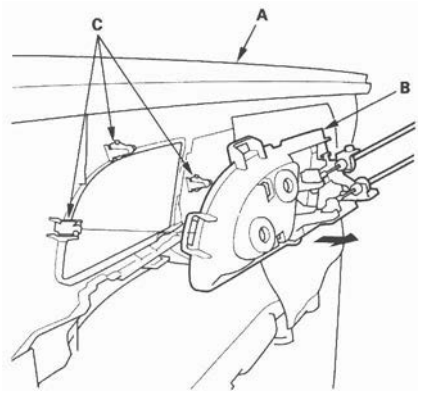

10. Disconnect the power window switch connector (A).

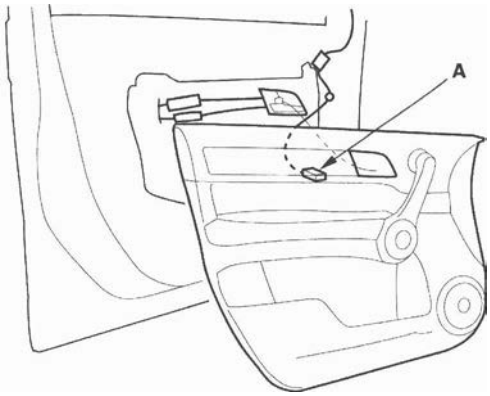

11. If necessary, disconnect the inner handle cable (A) and the latch cable (B) from the inner handle (C), then remove the handle.

   -1 Detach the inner handle cable fastener (D), then disconnect the inner handle cable from the cable fastener (E).
   -2 Detach the latch cable fastener (F) with a flat-tip screwdriver, then disconnect the latch cable from the cable fastener (G).

   NOTE: Check for damaged or stress-whitened cable fasteners.

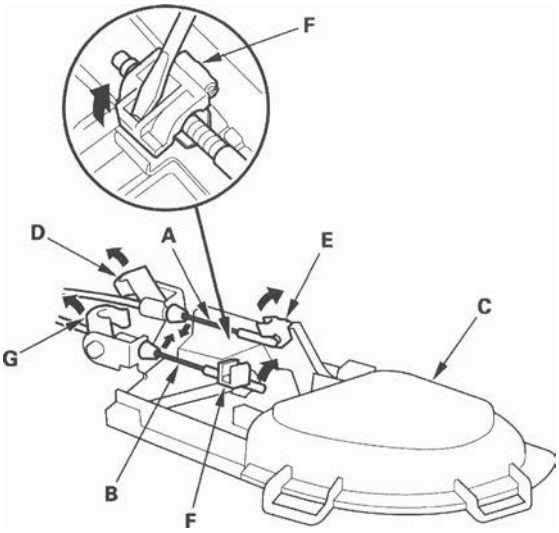

(cont'd)

Front Door Panel Removal/ Installation (cont'd)

12. Install the door panel in the reverse order of removal, and note these items:

- Check if the clips are damaged or stress-whitened, and if necessary, replace them with new ones.
- Replace any damaged cable fasteners with new ones.
- The latch cable (A) should be fixed to the cable fastener (B) with the latch in lock position as shown.
- Make sure the power window switch connector is plugged in properly, and the cable is connected securely.
- Make sure the window and power door lock operate properly.

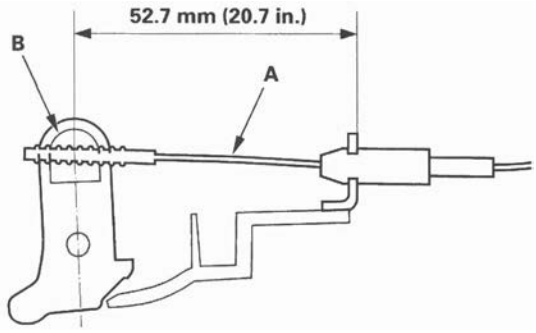

Front Door Outer Handle Replacement

NOTE: Put on gloves to protect your hands.

1. Raise the glass fully.
2. Remove the door panel (see page 20-6).
3. Remove the plastic cover (A).
   1. Remove the plug caps (B), and detach the harness clips (C).
   2. Disconnect the power door lock actuator connector (D), and pass the harness (E) and cables (F) through the holes (G) in the plastic cover.

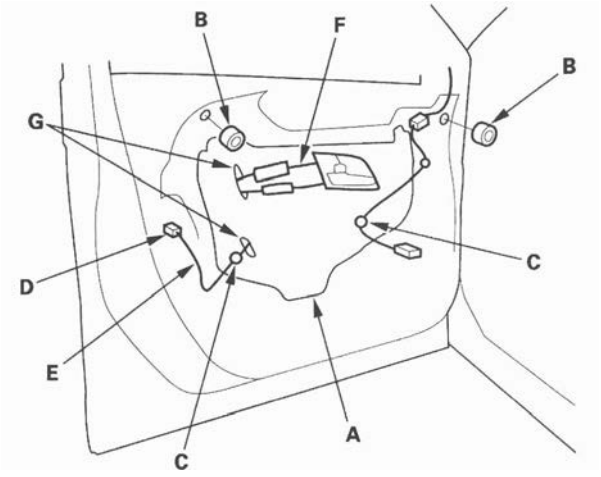

4. Detach the rod fastener (A).



5. Remove the maintenance cap (A). With a clip remover, disconnect the outer handle rod (B).

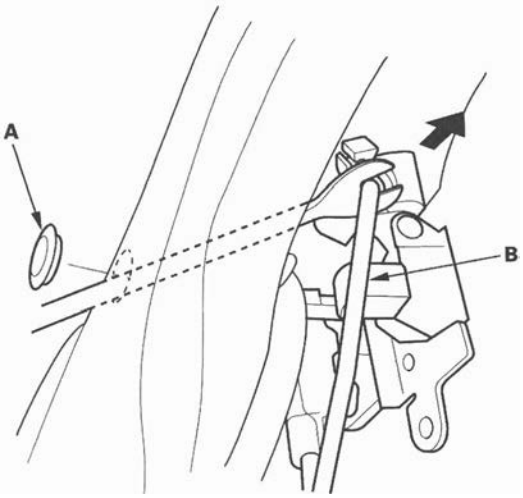

6. Pull both side flanges (A) of the retainer (B) outward, and pull the middle flange portion (C) of the outer casing cover (D) out, then disconnect the cylinder cable (E) from the latch (F).

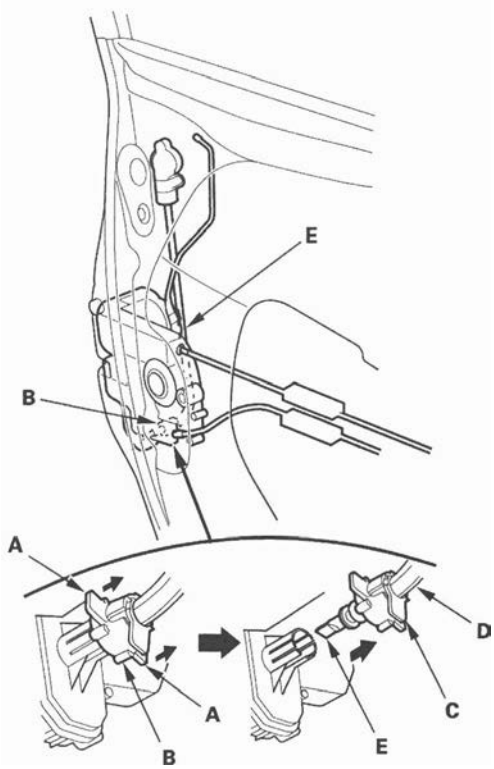

7. Remove the bolt, then remove the spacer (A).

Fastener Location

▶ : Bolt, 1

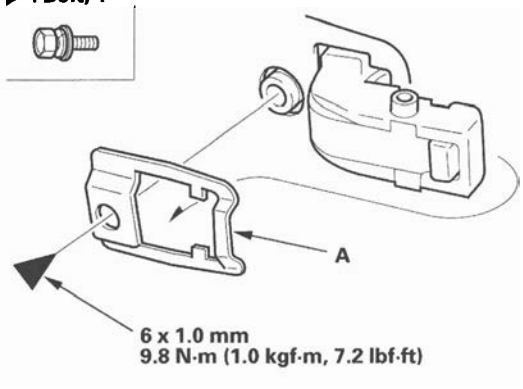

8. Remove the bolt securing the outer handle protector (A), then remove the protector by releasing the hook (B).

Fastener Location

▶ : Bolt, 1

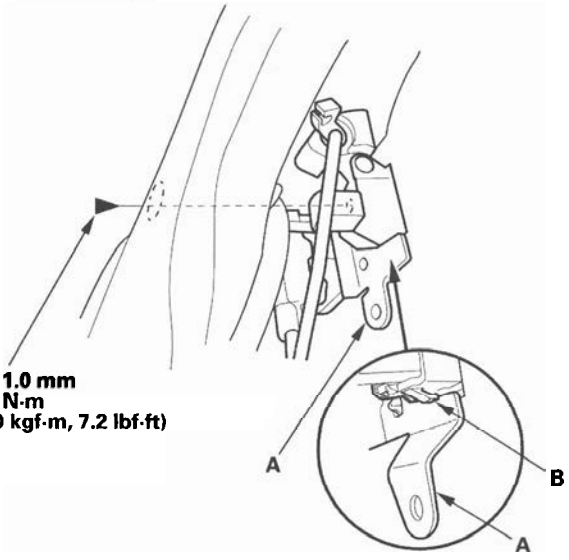

(cont'd)

Front Door Outer Handle Replacement (cont'd)

9. While pulling the outer handle (A), remove the handle from the holes in the door panel. Take care not to scratch the door.

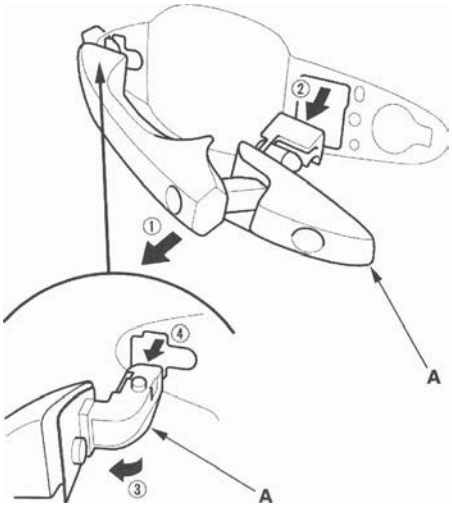

10. If necessary, remove the special screws, then separate the door cylinder (A) and outer handle protector (B). If the retainer (C) is damaged, release the hooks (D), and replace it.

    NOTE: If removed, the special screws must be replaced.

Fastener Locations

▶ : Screw, 2

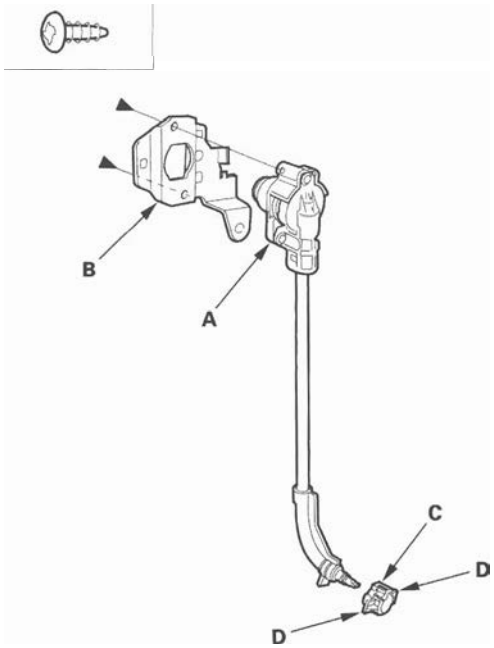

11. Remove the rod fastener (A) from the outer handle (B), then replace it with a new one.

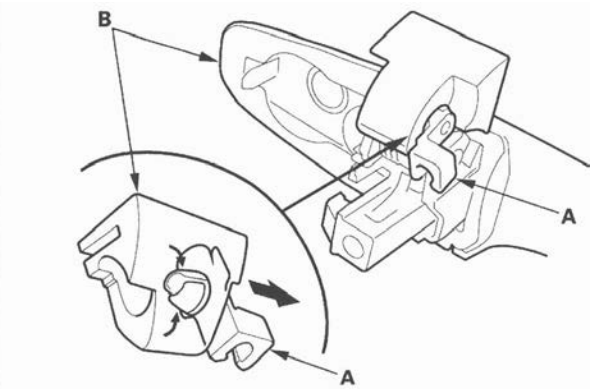

Front Door Latch Replacement

NOTE: Put on gloves to protect your hands.

1. Raise the glass fully.
2. Remove the door panel (see page 20-6).
3. Remove the inner handle (see step 2 on page 20-6).
4. Remove the plastic cover, as needed (see step 3 on page 20-8).
5. Detach the rod fastener (see step 4 on page 20-8).
6. Disconnect the outer handle rod from the outer handle (see step 5 on page 20-9).
7. Pull the glass run channel (A) away as needed, and remove the bolt, then remove the center lower channel (B) by pulling it downward.
   Take care not to bend, deform or damage the center lower channel.

Fastener Location

▶ : Bolt, 1

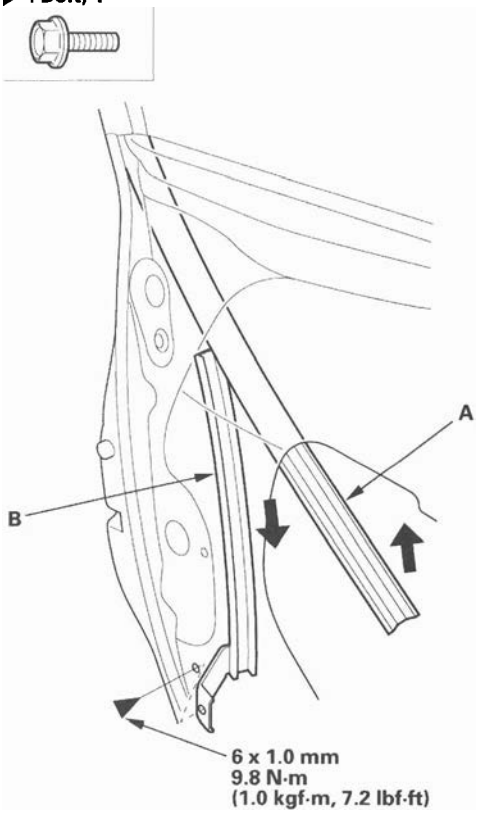

8. Disconnect the cylinder cable from the latch (see step 6 on page 20-9).
9. Remove the screws (A, B) securing the latch (C), then remove the latch through the hole in the door. Take care not to bend the outer handle rod (D), latch cable (E), and inner handle cable (F).

Fastener Locations

A ▶ : Screw, 3 B ▶ : Screw, 1

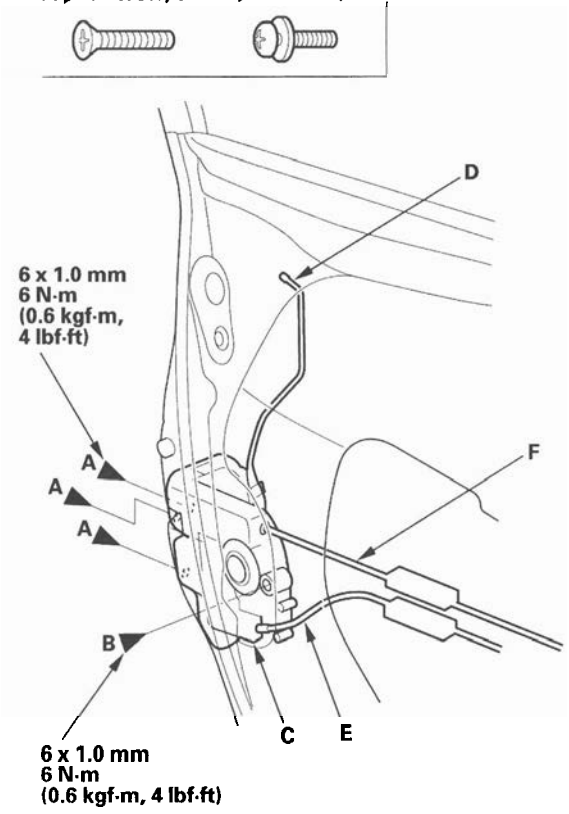

(cont'd)

Front Door Latch Replacement (cont'd)

10. Remove the screws, then remove the latch protector (A).

Fastener Locations

▶ : Screw, 2

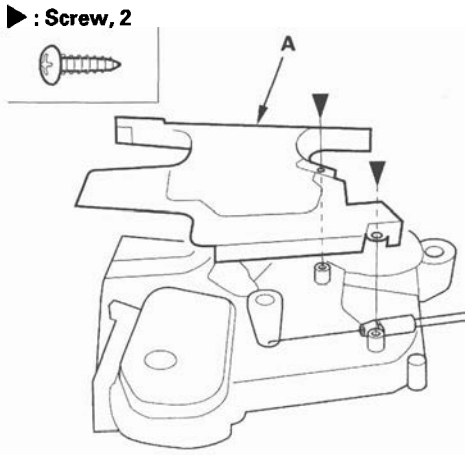

11. Detach the latch cable (A) from the latch (B).

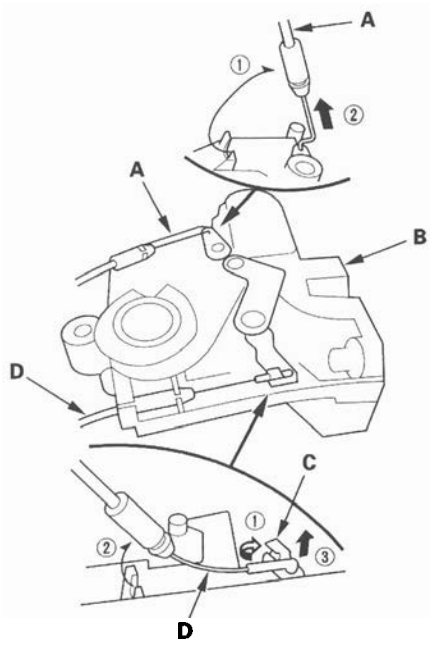

12. Detach the cable fastener (C), then disconnect the inner handle cable (D) from the cable fastener.

NOTE: Check for damaged or stress-whitened cable fasteners.

13. Install the latch in the reverse order of removal, and note these items:

- Make sure the actuator connector is plugged in properly and each rod is connected securely.
- Make sure the door locks and opens properly.
- When reinstalling the door panel, make sure the plastic cover is installed properly and sealed around its outside perimeter to seal out water.
- Check for water leaks.

Front Door Glass and Regulator Replacement

NOTE: Put on gloves to protect your hands.

1. Remove the door panel (see page 20-6).

2. Remove the plastic cover (A).

   -1 Remove the plug caps (B), and detach the harness clips (C).
   -2 Disconnect the power door lock actuator connector (D), and pass the harness (E) and cables (F) through the holes (G) in the plastic cover.

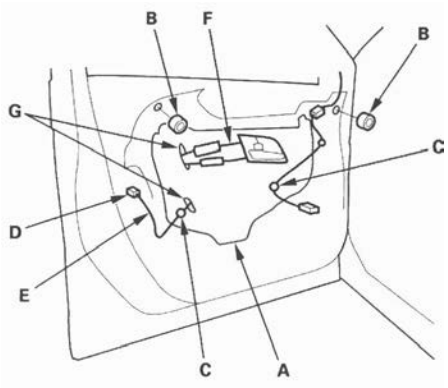

3. Carefully raise the glass (A) until you can see the bolts, then remove them. Carefully pull the glass out through the window slot. Take care not to drop the glass inside the door.

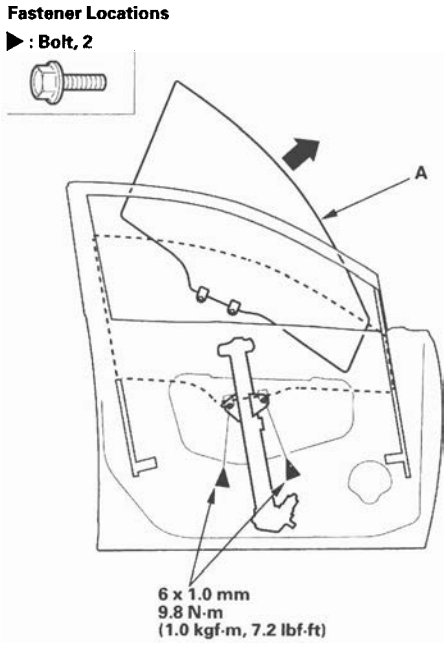

4. Disconnect the connector (A) from the regulator (B).

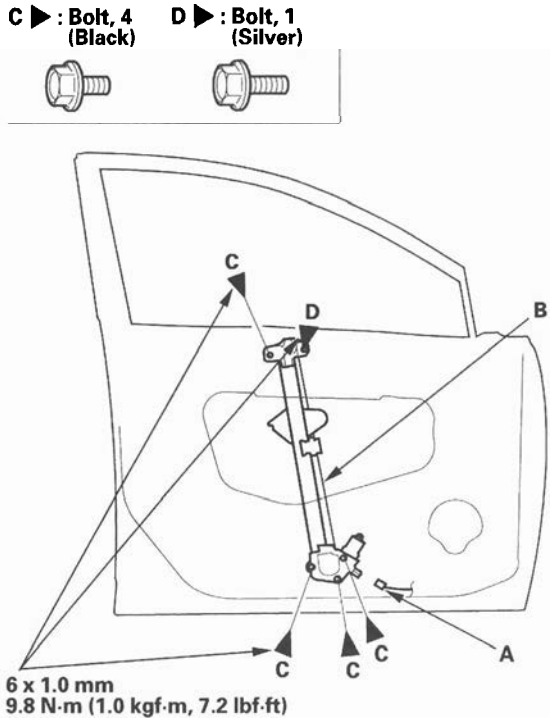

5. Remove the bolts (C), and loosen the bolt (D), then remove the regulator through the hole in the door.

6. Apply multipurpose grease to all the sliding surfaces of the regulator (A) where shown.

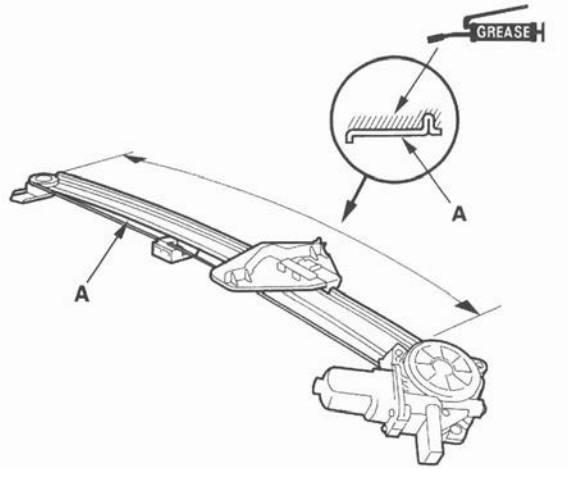

(cont'd)

Front Door Glass and Regulator Replacement (cont'd)

7. Install the glass and regulator in the reverse order of removal, and note these items:

   - Raise and lower the glass to see if it moves freely without binding.
   - Make sure that there is no clearance between the glass and glass run channel when the glass is closed.
   - Adjust the position of the glass as necessary (see page 20-29).
   - Reset the power window control unit (see page 22-189).
   - When reinstalling the door panel, make sure the plastic cover is installed properly and sealed around its outside perimeter to seal out water.
   - Make sure the power door locks, windows, and power mirror operate properly.
   - Test-drive and check for wind noise and rattles.
   - Check for water leaks (see step 7 on page 20-29).

Front Door Glass Outer Weatherstrip Replacement

NOTE:
- Put on gloves to protect your hands.
- Take care not to scratch the door.

1. Remove these items:

   Power mirror (see page 20-33)
   - Door panel (see page 20-6)
   - Plastic cover, as needed (see step 3 on page 20-8)

2. Slide the clips (A) to release the hooks (B) from the flanges (C) of the door panel.

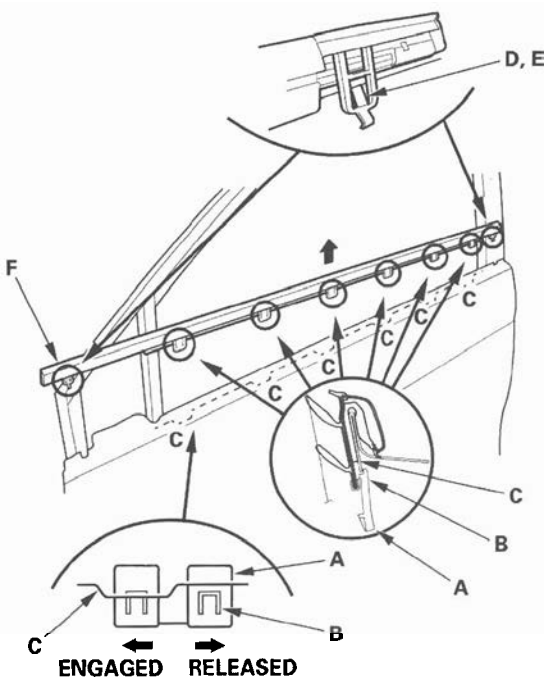

3. Release the front hook (D) and rear hook (E) from inside of the door, then remove the weatherstrip (F).

4. Install a new weatherstrip in the reverse order of removal, and note these items:

   - Check if the clips are damaged or stress-whitened, and if necessary, replace them with new ones.
   - The clips should be engaged with flanges (installation points) of the door panel.
   - Push the clips, front hook, and rear hook into place securely.

Front Door Outer Molding Replacement

Special Tools Required
KTC trim tool set SOJATP2014 *
* Available through the American Honda Tool and Equipment Program; call 888-424-6857

NOTE:
- Once you remove the door outer molding, replace it with a new one because it will bend during removal.
- Put on gloves to protect your hands.
- Take care not to scratch the door.
- Use the appropriate tool from the KTC trim tool set to avoid damage when prying components.

1. Remove the power mirror (see page 20-33). To prevent scratching the power mirror and door, wrap the power mirror with a shop towel. Disconnecting the power mirror connector is not required.

2. Remove the door outer molding (A).

   -1 Pry the rear clip with a trim tool.
   -2 While removing the upper edge of the door outer molding from the edge of the sash, cut the double-sided adhesive tapes (B) with a utility knife, then remove the molding.

Fastener Location
▷: Clip, 1

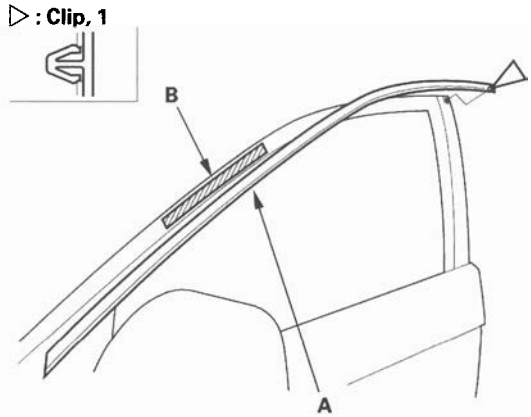

3. Scrape off the remaining double-sided adhesive tape from the sash, then clean the sash surface with a sponge dampened in isopropyl alcohol.

4. Install a new door outer molding in the reverse order of removal, and note these items:

   - Push the clip and the adhesive portions into place securely.
   - Make sure the upper and lower sides of the molding are catching the edge of the sash properly.

Front Door Weatherstrip Replacement

NOTE:
- Put on gloves to protect your hands.
- Take care not to scratch the door.
- Use a clip remover to remove the clips.

1. At the A-pillar, remove the door checker mounting bolt (A).

Fastener Locations

A ▶ : Bolt, 1 B ▷ : Clip, 2 C ▷ : Clip, 15



D ▷ : Clip, 1



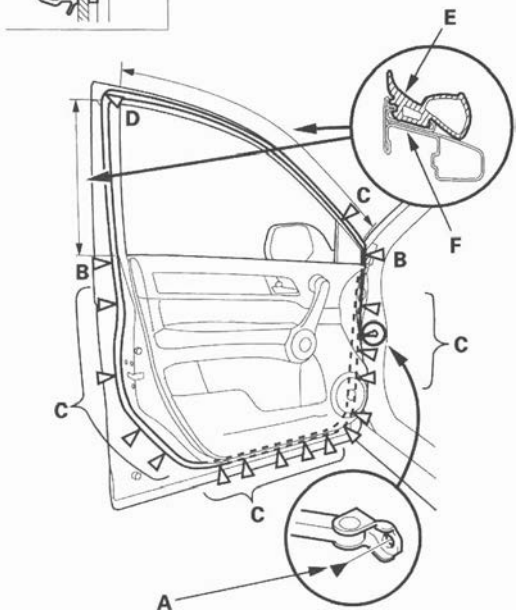

8 x 1.25 mm
29 N·m
(3.0 kgf·m, 22 lbf·ft)

2. Detach the clips (B, C, D), then remove the door weatherstrip (E).

3. Install the weatherstrip in the reverse order of removal, and note these items:

- Check if the clips are damaged or stress-whitened, and if necessary, replace them with new ones.
- Make sure the weatherstrip is installed in the holder (F) securely.
- Apply medium strength type liquid thread lock to door checker mounting bolt before installation.
- Check for water leaks.

Rear Door Panel Removal/Installation

Special Tools Required
- KTC trim tool set SOJATP2014 *
- Trim pad remover, Snap-on A 177A or equivalent, commercially available

* Available through the American Honda Tool and Equipment Program; call 888-424-6857

NOTE:
- Use the appropriate tool from the KTC trim tool set to avoid damage when prying components.
- Take care not to scratch the door and related parts.

1. Raise the glass fully.

2. Using the appropriate trim tool, pry out on the under portion of the inner handle cap (A) to release the hooks (B, C).

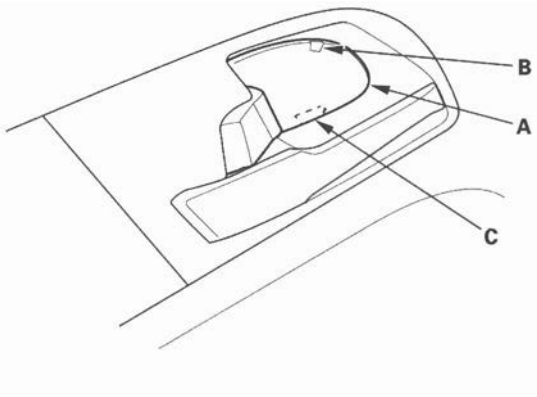

3. Remove the screws from the inner handle (A).

Fastener Locations
▶ : Screw, 2

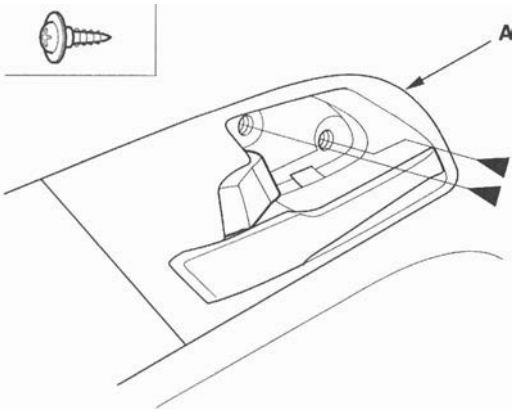

4. Using the appropriate trim tool, pry out on the upper cap (A) of the front door grip to release the hooks (B). Then remove the screw (C).

Fastener Locations
C, F ▶ : Screw, 2

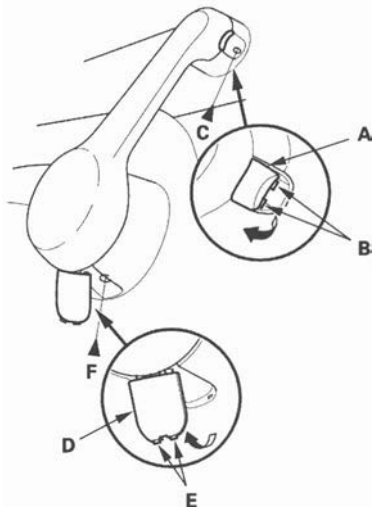

5. Using the appropriate trim tool, pry out on the lower cap (D) of the front door grip to release the hooks (E). Then remove the screw (F).

6. Using the appropriate trim tool, pry out on the cover (A) in the door pocket to release the hooks (B). Then remove the cover, and screw.

Fastener Location
▶ : Screw, 1

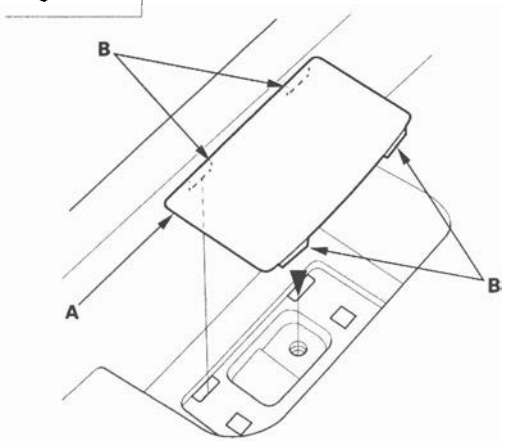

(cont'd)

Rear Door Panel Removal/Installation (cont'd)

7. Carefully pry out the rear edge of the quarter inner trim (A) to detach the clips, then remove it.

Fastener Locations
▷ : Clip, 2

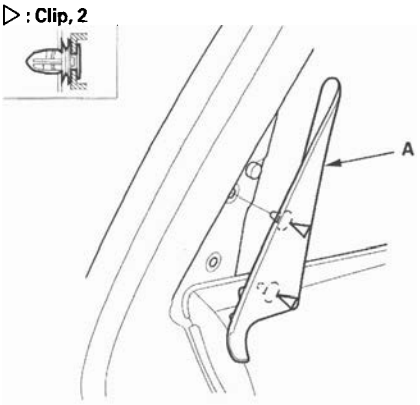

8. Remove the door panel (A) with as little bending as possible to avoid creasing or breaking it.

-1 Start at the bottom edge of the door panel, release the clips with a commercially available trim pad remover.
-2 Detach the upper clips (B, C).
-3 Starting at the rear, pull the door panel upward.

NOTE: The inner handle cable and latch cable are connected to the inner handle (D). Do not pull the door panel up too far, or these cables will be damaged.

Fastener Locations
B ▷ : Clip, 3 (Gray) C ▷ : Clip, 4 (White)

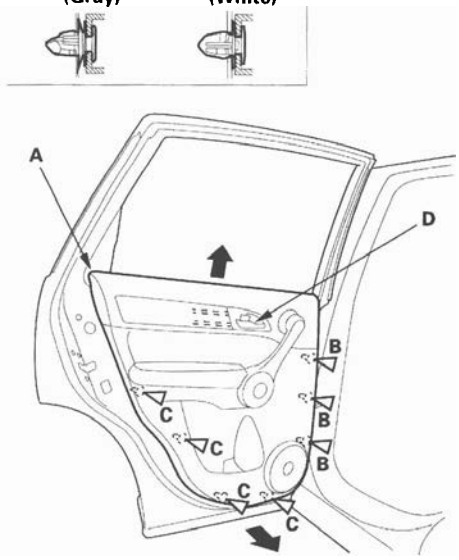

9. While holding the door panel (A) away from the door, remove the inner handle (B) from the door panel by detaching the hooks (C). Remove the door panel.

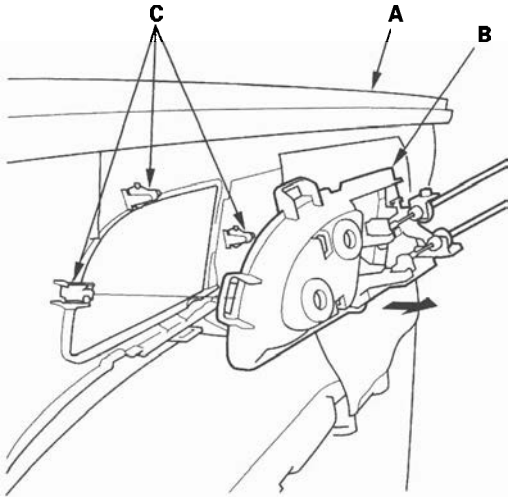

10. Disconnect the power window switch connector (A).

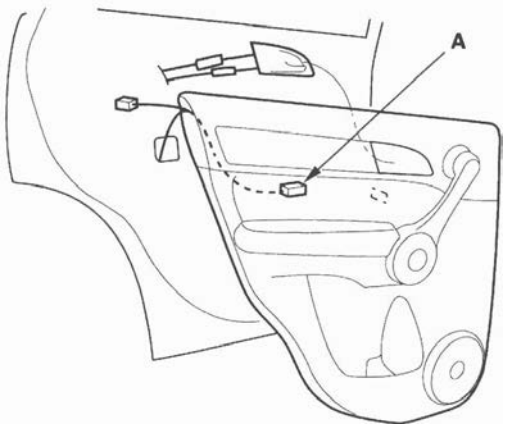

11. If necessary, disconnect the inner handle cable (A) and the latch cable (B) from the inner handle (C), then remove the handle.

-1 Detach the inner handle cable fastener (D), then disconnect the inner handle cable from the cable fastener (E).
-2 Detach the latch cable fastener (F) with a flat-tip screwdriver, then disconnect the latch cable from the cable fastener (G).

NOTE: Check for damaged or stress-whitened cable fasteners.

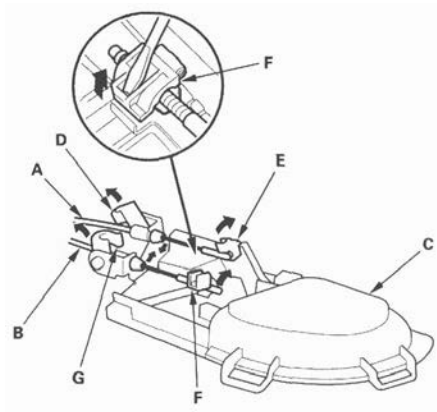

12. Install the door panel in the reverse order of removal, and note these items:

Check if the clips are damaged or stress-whitened, and if necessary, replace them with new ones.
- Replace any damaged cable fasteners with new ones.
- The latch cable (A) should be fixed to the cable fastener (B) with the latch in lock position as shown.
- Make sure the power window switch connector is plugged in properly, and the cable is connected securely.
- Make sure the window and power door lock operate properly.

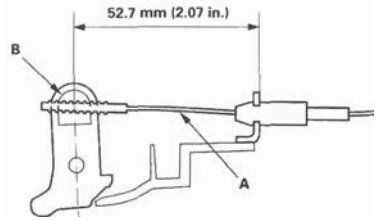

Rear Door Outer Handle Replacement

NOTE: Put on gloves to protect your hands.

1. Raise the glass fully.
2. Remove the door panel (see page 20-6).
3. Remove the plastic cover (A).

-1 Remove the screw and the door pull pocket bracket (B).
-2 Remove the plug caps (C), and detach the harness clip (D).
-3 Disconnect the power door lock actuator connector (E), and pass the harness (F) and cables (G) through the holes (H) in the plastic cover.

Fastener Location
▶ : Screw, 1

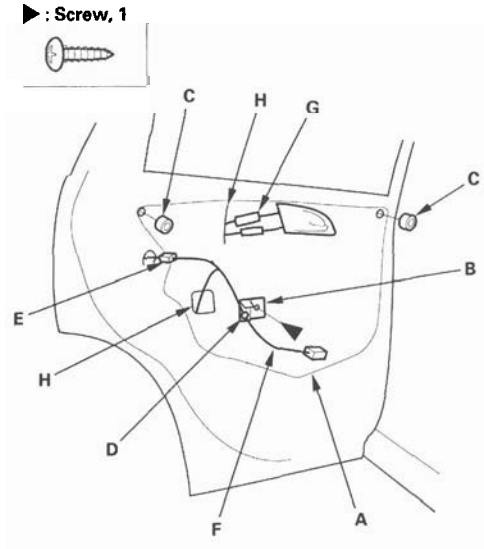

4. Detach the rod fastener (A).

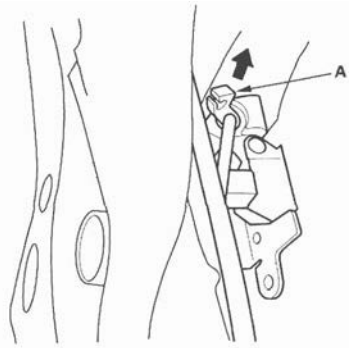

(cont'd)

Rear Door Outer Handle Replacement (cont'd)

5. Remove the maintenance seal (A). With a clip remover, disconnect the outer handle rod (B) from the outer handle (C).

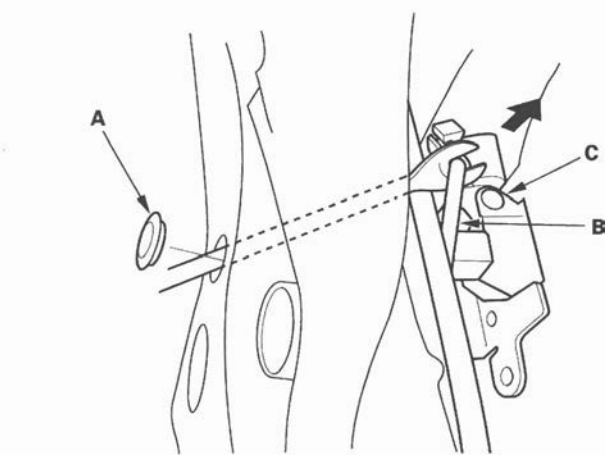

6. Remove the bolt, then remove the spacer (A).

Fastener Location
▶ : Bolt, 1

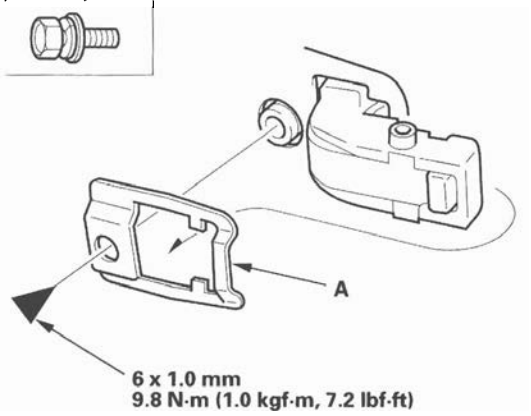

7. Remove the bolts securing the outer handle protector (A), then remove the protector by releasing the hook (B).

Fastener Location
▶ : Bolt, 1

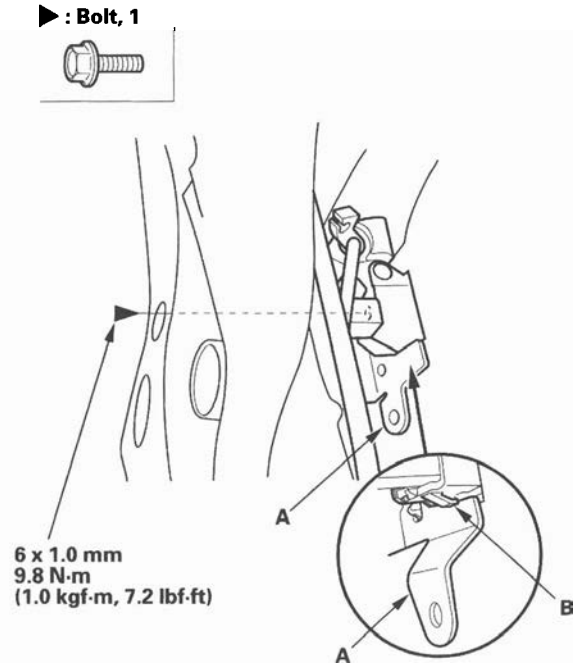

8. While pulling the outer handle (A), and remove the handle from the holes in the door panel. Take care not to scratch the door.

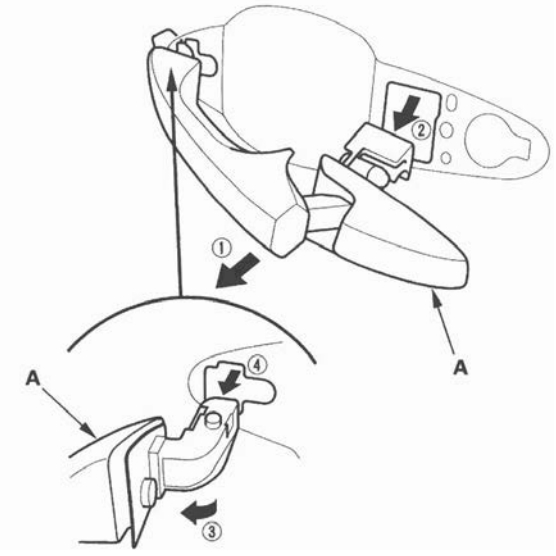

9. Remove the rod fastener (A) from the outer handle (B), then replace it with a new one.

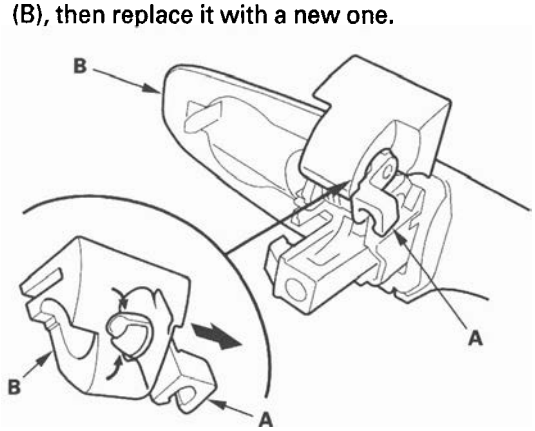

10. Install the handle in the reverse order of removal, and note these items:

- Make sure the outer handle rod is connected securely.
- Make sure the door handle works properly.
- Make sure the door locks and opens properly.
- When installing the door panel, make sure the plastic cover is installed properly and sealed around its outside perimeter to seal out water.
- Check for water leaks.

Rear Door Latch Replacement

NOTE: Put on gloves to protect your hands.

1. Raise the glass fully.
2. Remove the rear door panel (see page 20-17).
3. Remove the plastic cover, as needed (see step 3 on page 20-19).
4. Disconnect the outer handle rod from the outer handle (see step 5 on page 20-20).
5. Detach the rod fastener (see step 9 on page 20-21).
6. Remove the screws (A, B) securing the latch (C), then lower it.

Fastener Locations

A ▶ : Screw, 3 B ▶ : Screw, 1

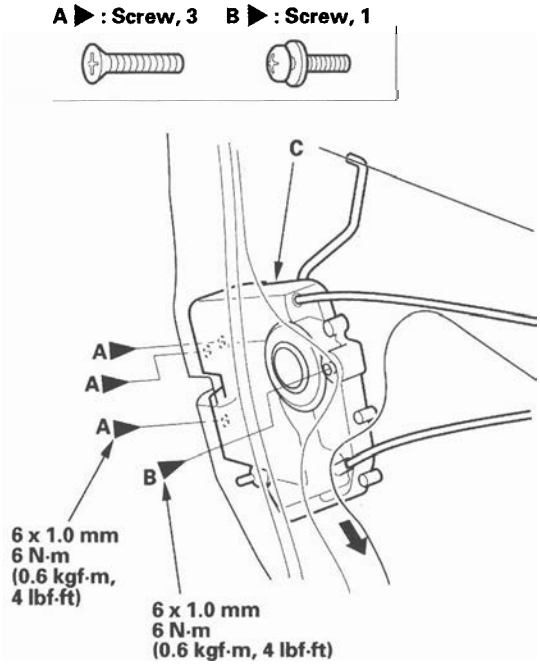

(cont'd)

Rear Door Latch Replacement (cont'd)

7. Remove the bolt from the lower end of the rear door lower channel (A).

Fastener Location

▶ : Bolt, 1

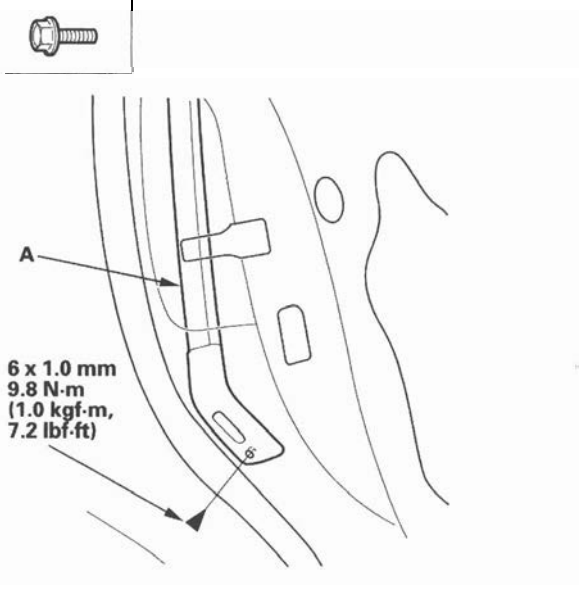

8. Slant the latch (A) while inside the door.

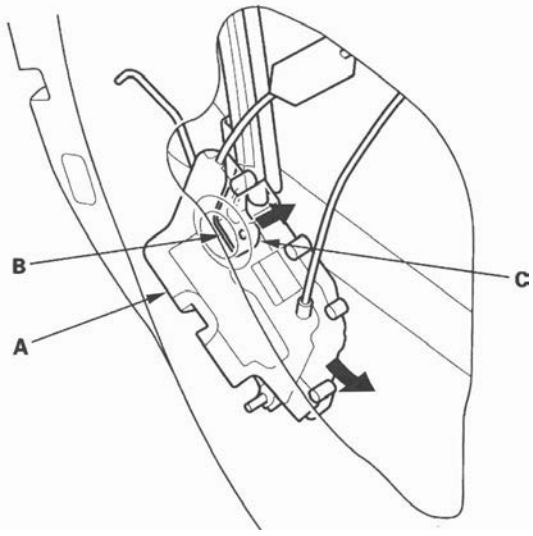

9. Pass the latch through under the rear door lower channel (B) while pulling up the end (C) of the rear door lower channel lightly, and remove it from the inside of the door.

10. Remove the screws, then remove the latch protector (A).

Fastener Locations

▶ : Screw, 2

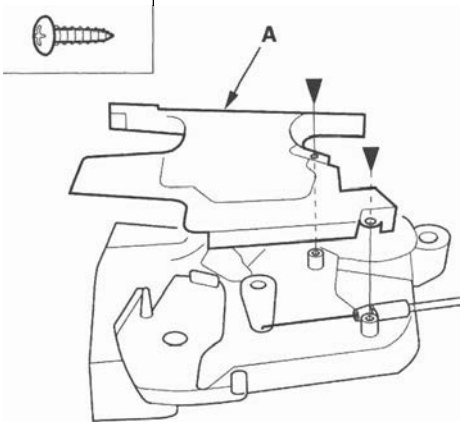

11. Detach the latch cable (A) from the latch (B).

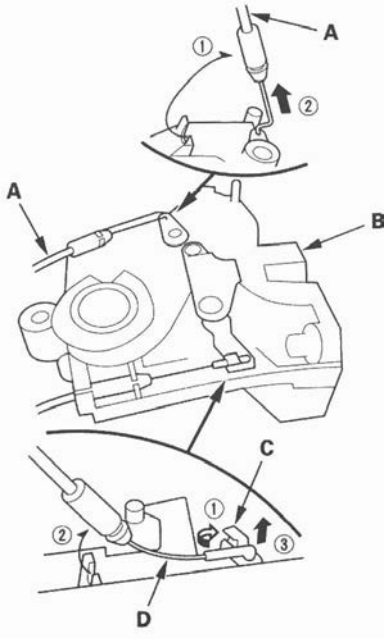

12. Detach the cable fastener (C), then disconnect the inner handle cable (D) from the cable fastener.

NOTE: Check for damaged or stress-whitened cable fasteners.

13. Install the latch in the reverse order of removal, and note these items:

- Make sure the actuator connector is plugged in properly and each rod is connected securely.
- Make sure the door locks and opens properly.
- When reinstalling the door panel, make sure the plastic cover is installed properly and sealed around its outside perimeter to seal out water.
- Check for water leaks.

Rear Door Glass and Regulator Replacement

NOTE: Put on gloves to protect your hands.

1. Remove the rear door panel (see page 20-17).

2. Remove the plastic cover (A).

-1 Remove the screw and the door pull pocket bracket (B).
-2 Remove the plug caps (C), and detach the harness clip (D).
-3 Disconnect the power door lock actuator connector (E), and pass the harness (F) and cables (G) through the holes (H) in the plastic cover.

Fastener Location

▶ : Screw, 1

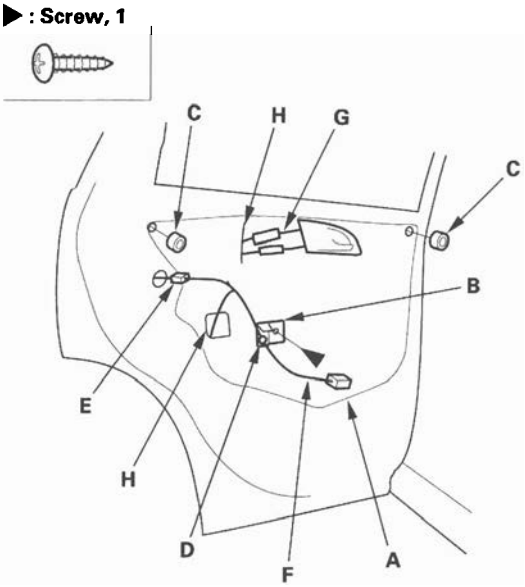

(cont'd)

Rear Door Glass and Regulator Replacement (cont'd)

3. Carefully move the glass (A) until you can see the bolts, then remove them. Carefully lower the glass into the door: Take care not to drop the glass inside the door.

Fastener Locations
▶ : Bolt, 2

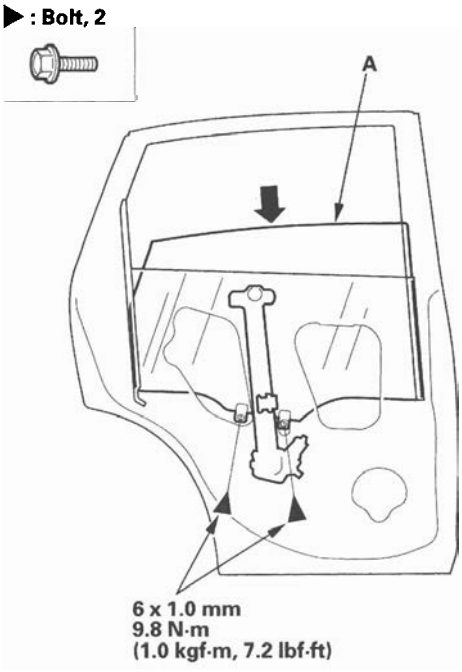

4. Remove the bolt from the lower end of the rear door lower channel (A).

Fastener Location
▶ : Bolt, 1

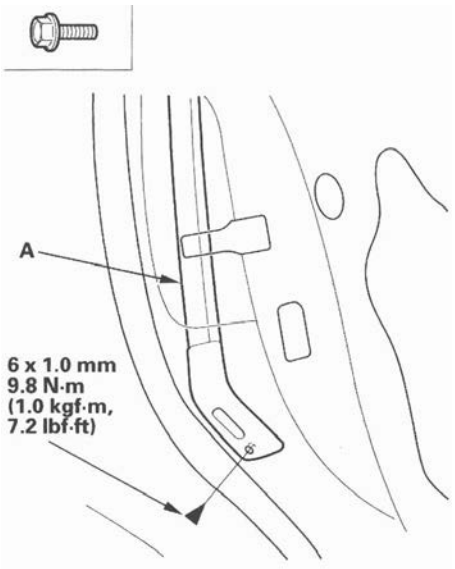

5. Remove the nut from the rear lower channel (A). Pull the glass run channel (B) away as needed. Pull the rear lower channel forward from the door.

Fastener Location
● : Nut, 1



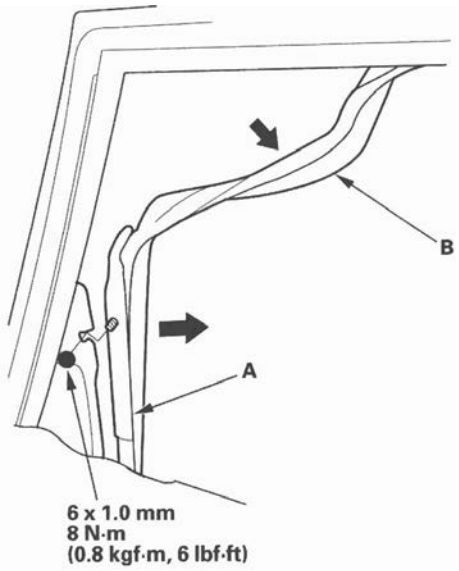

6. Release the rear lower channel (A) from the glass by pulling the channel up.

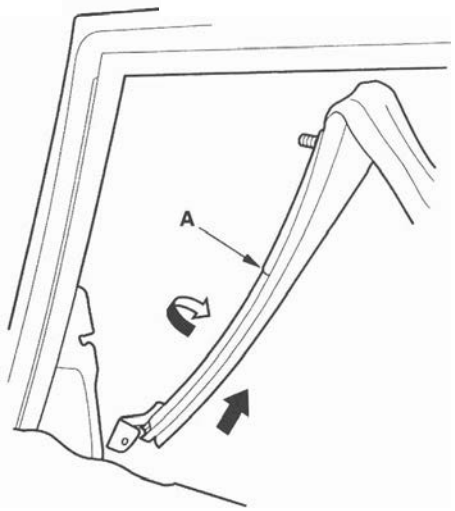

7. Twist the rear lower channel to pass it through the gap between the door panel and the rear sash, then pull the channel up to remove it.

8. Remove the rear lower channel (A) from the glass run channel (B).

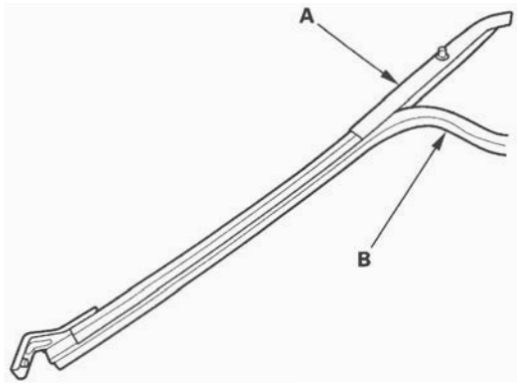

9. Carefully remove the glass (A) out through the window slot. Take care not to drop glass inside the door.

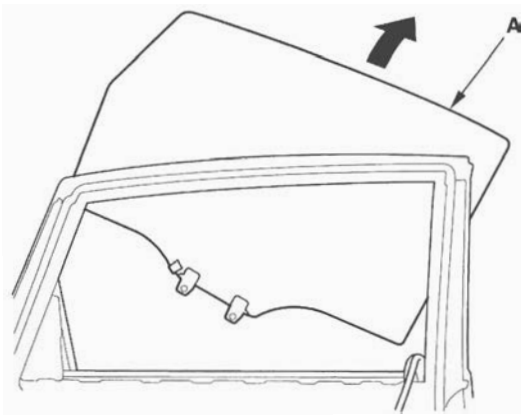

10. Disconnect the connector (A) from the regulator (B).

Fastener Locations

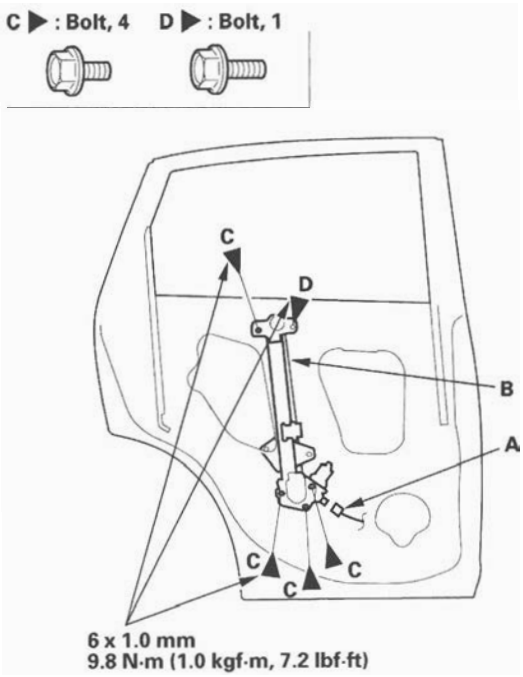

11. Remove the bolts (C), and loosen the bolt (D), then remove the regulator through the hole in the door.

12. Apply multipurpose grease to all the sliding surfaces of the regulator (A) where shown.

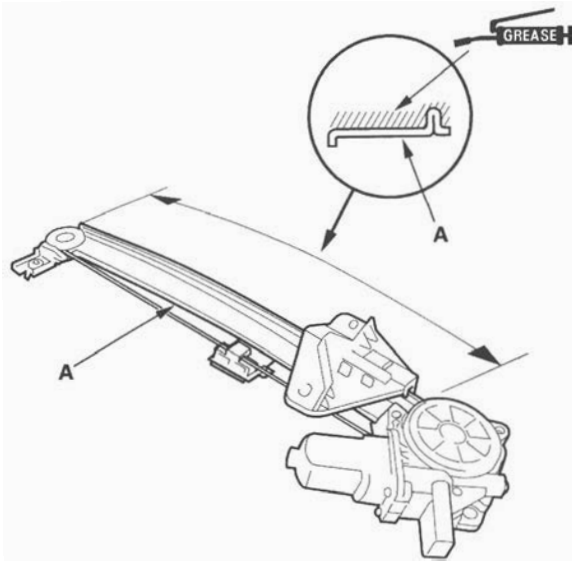

(cont'd)

Rear Door Glass and Regulator Replacement (cont'd)

13. Install the glass and regulator in the reverse order of removal, and note these items:

    - Roll the glass up and down to see if it moves freely without binding.
      Make sure that there is no clearance between the glass and glass run channel when the glass is closed.
    - Adjust the position of the glass as necessary (see page 20-29).
    - Check for water leaks.
    - When reinstalling the door panel, make sure the plastic cover is installed properly and sealed around its outside perimeter to seal out water.
    - Test-drive and check for wind noise and rattles.
    - Make sure the power door locks and windows operate properly.

Rear Door Rear Sash Trim Replacement

NOTE: Put on gloves to protect your hands.

1. Lower the glass fully.
2. Remove the quarter inner trim (see step 7 on page 20-18).
3. From inside the door, remove the screw (A).

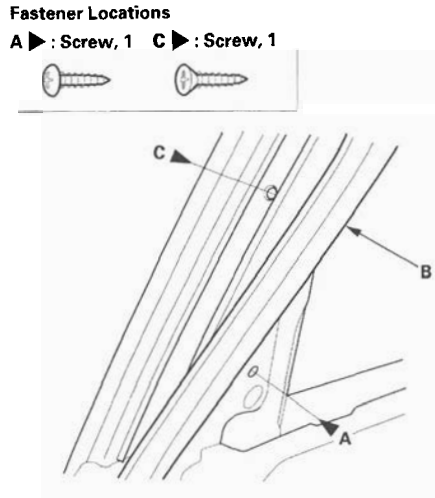

4. Pull up the rear of the door weatherstrip (B), and remove the screw (C) from the sash. Do not remove the weatherstrip at this time, and take care not to damage the weatherstrip.
5. Carefully push and pry out the front edges of the rear door quarter outer trim (A) to release the rear edges (B) by hand in the sequence shown.

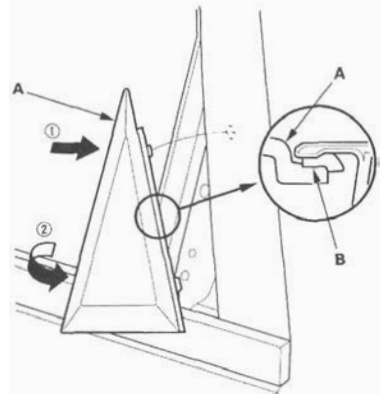

6. Install the quarter trim in the reverse order of removal.

Rear Door Glass Outer Weatherstrip Replacement

NOTE:
- Put on gloves to protect your hands.
- Take care not to scratch the door.

1. Remove these items:
   - Rear door panel (see page 20-17)
   - Plastic cover (see step 3 on page 20-19)
   - Rear door rear sash trim (see page 20-26)

2. Slide the clips (A) to release the hooks (B) from the flanges (C) of the door panel.

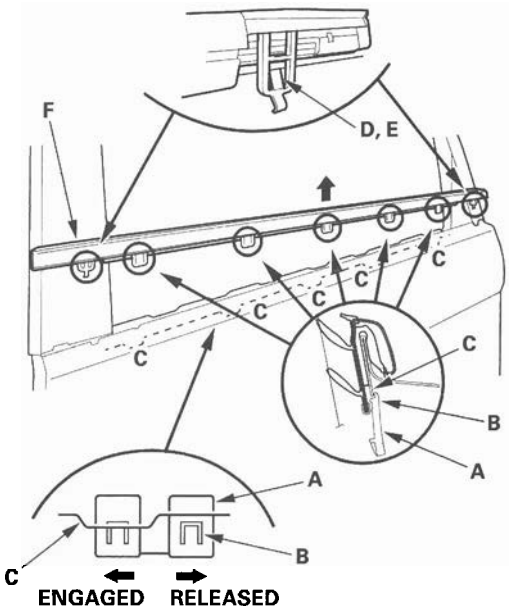

3. Release the front hook (D) and rear hook (E) from inside of the door, then remove the weatherstrip (F).

4. Install the weatherstrip in the reverse order of removal, and note these items:
   - Check if the clips are damaged or stress-whitened, and if necessary, replace them with new ones.
   - The clips should be engaged with flanges (installation points) of the door panel.
   - Push the clips, front hook, and rear hook into place securely.

Rear Door Outer Molding Replacement

Special Tools Required
KTC trim tool set SOJATP2014 *
* Available through the American Honda Tool and Equipment Program; call 888-424-6857

NOTE:
- Once you remove the door outer molding, replace it with a new one because it will bend during removal.
- Put on gloves to protect your hands.
- Take care not to scratch the door.
- Use the appropriate tool from the KTC trim tool set to avoid damage when prying components.

1. Pry the rear clip with a trim tool, then remove the door outer molding (A).

Fastener Locations
▷ : **Clip, 2**

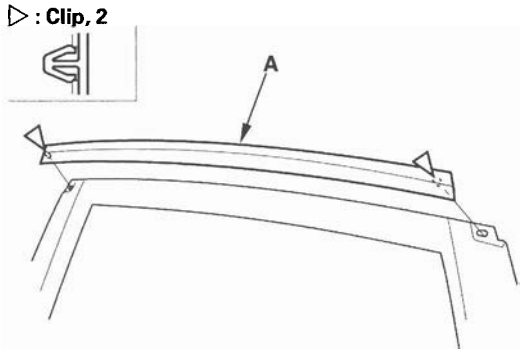

2. Install a new door outer molding in the reverse order of removal, and note these items:
   - Push the clip and the adhesive portions into place securely.
   - Make sure the upper and lower sides of the molding are catching the edges of the sash properly.

Rear Door Weatherstrip Replacement

NOTE:
- Put on gloves to protect your hands.
- Take care not to scratch the door.
- Use a clip remover to remove the clips.

1. At the B-pillar, remove the door checker mounting bolt (A).

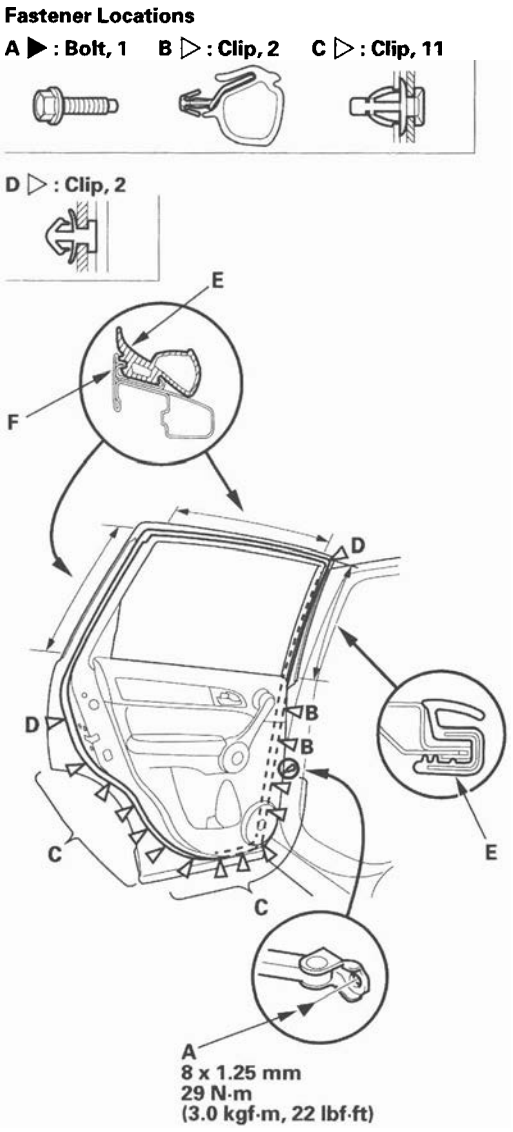

2. Detach the clips (B, C, D), then remove the door weatherstrip (E).

3. Install the weatherstrip in the reverse order of removal, and note these items:
   - Check if the clips are damaged or stress-whitened, and if necessary, replace them with new ones.
   - Make sure the weatherstrip is installed in the holder (F) securely.
   - Apply medium strength type liquid thread lock to door checker mounting bolt before installation.
   - Check for water leaks.

Front and Rear Door Glass Adjustment

NOTE: Check the weatherstrips and glass run channel for damage or deterioration, and replace them if necessary.

1. Place the vehicle on a firm, level surface.

2. Remove these items:

   - Door panel, front door (see page 20-6), rear door (see page 20-17)
     Plastic cover, front door (see step 3 on page 20-8), rear door (see step 3 on page 20-19)

3. Carefully move the glass (A) until you can see the glass mounting bolts (B), then loosen them.

Front door

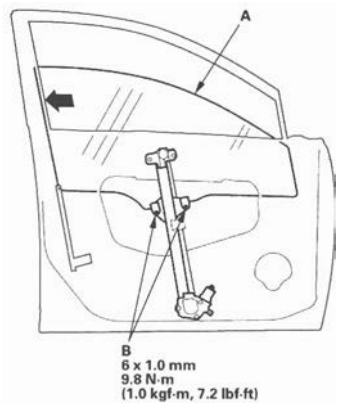

Rear door

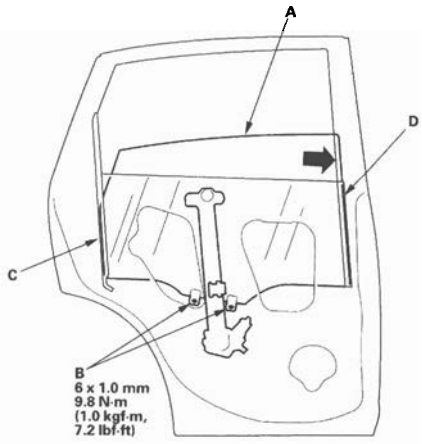

4. Front: Push the glass against the rear lower channel (C), then tighten the glass mounting bolts.

   Rear: Push the glass against the front lower channel (D), then tighten the glass mounting bolts.

5. Check that the glass moves smoothly.

6. Raise the glass fully, and check for gaps. Also check that the glass (A) contacts the glass run channel (B) evenly.

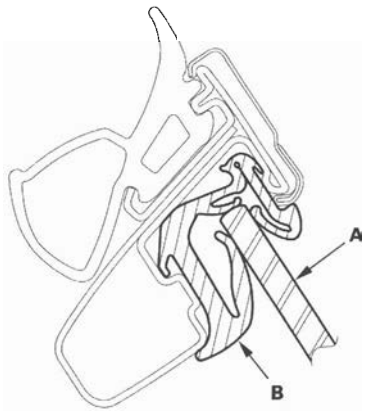

7. Check for water leaks. Run water over the roof and on the sealing area as shown, and note these items:

   - Use a 12 mm (1/2 in.) diameter hose (A).
   - Adjust the rate of water flow as shown (B).
   - Do not use a nozzle.
   - Hold the hose about 300 mm (12 in.) away from the door (C).

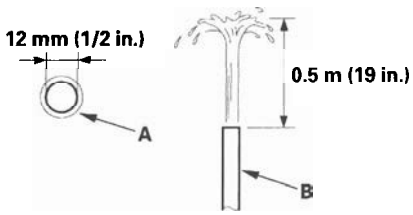

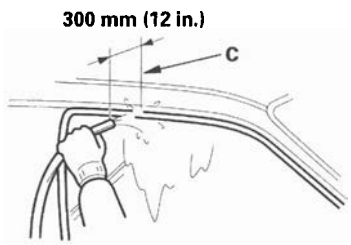

8. Attach the plastic cover making sure it is sealed around its outside perimeter to seal out water, then install the door panel:

   - Front door (see page 20-6)
   - Rear door (see page 20-17)

Front and Rear Door Position Adjustment

SRS components are located in the center pillar bottom area. Review the SRS component locations (see page 24-13) and the precautions and procedures (see page 24-15) before doing repairs or service.

NOTE: Check for a flush fit with the body, then check for equal gaps between the front, rear, and bottom door edges and the body. Check that the door and body edges are parallel. Before adjusting, replace the mounting bolts.

1. Place the vehicle on a firm, level surface when adjusting the doors.

2. Adjust at the hinges (A):

   - Pad a floor jack (B) with shop towels (C), then use the jack to support the door to prevent damage to the door while adjusting it. If necessary, remove the door lower trim (see page 20-168).
   - On the front door: Remove the front inner fender (see page 20-181). Loosen the hinge mounting bolts (D) slightly, and move the door backward or forward, up or down as necessary to equalize the gaps.
   - On the rear door: Remove the B-pillar lower trim (see page 20-72), and the plug seal from the body. Loosen the hinge mounting nuts (E) slightly, and move the door backward or forward, up or down as necessary to equalize the gaps.

Front door

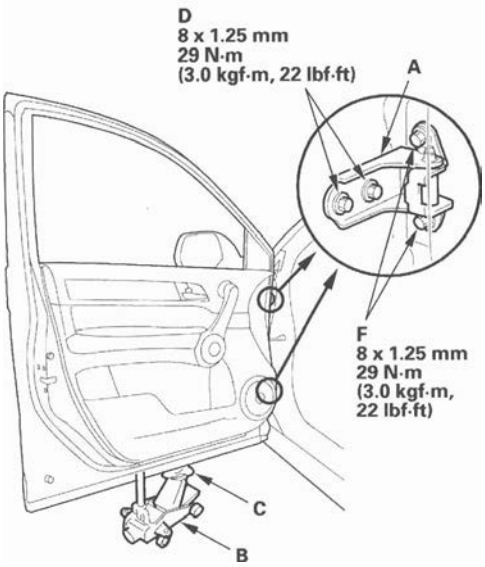

Rear door

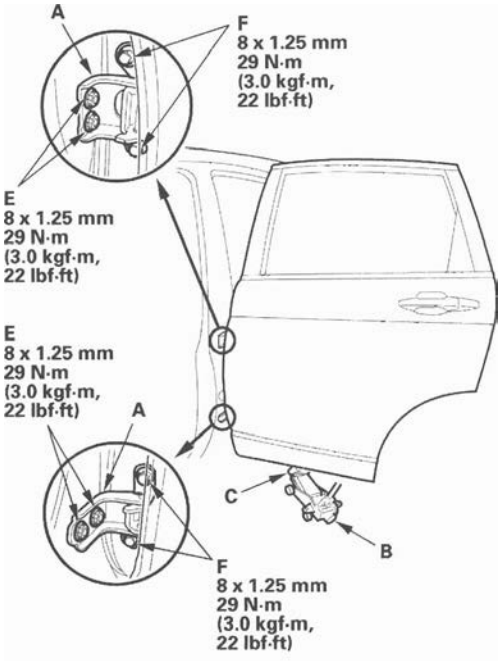

3. If necessary, replace the door mounting bolts with the adjusting bolts (P/N 90102-SFA-305) made specifically for door adjustment, then adjust at the door: Loosen the door mounting bolts (F) slightly, and move the door up or down as necessary to equalize the gaps, and move it in or out until it's flush with the body.

4. Check that the door and body edges are parallel. If necessary, adjust the door cushions (A) to make the rear of the doors flush with the body.

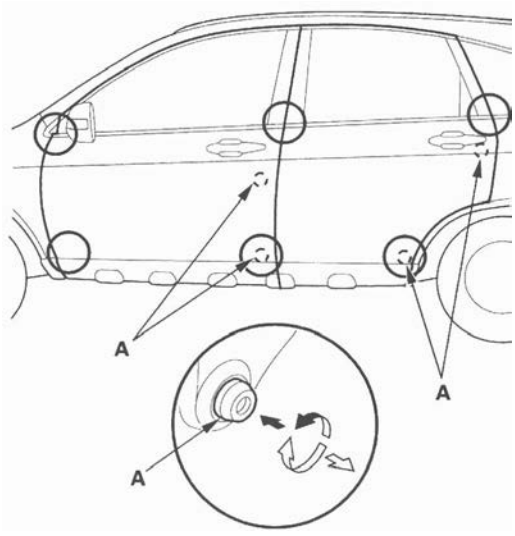

5. Apply touch-up paint to the hinge mounting bolts, and around the hinges.

6. Check for water leaks (see step 7 on page 20-29).

Front and Rear Door Striker Adjustment

Make sure the door latches securely without slamming it. If necessary, adjust the striker (A): The striker nuts are fixed, but the striker can be adjusted slightly up or down, and in or out.

1. Loosen the screws (B).

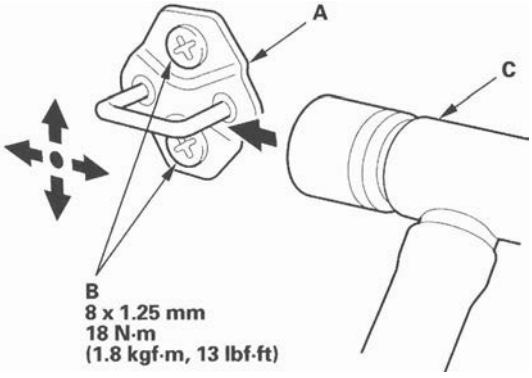

2. Wrap the striker with a shop towel, then adjust the striker by tapping it with a plastic hammer (C). Do not tap the striker too hard.

3. Lightly tighten the screws.

4. Hold the outer handle out, and push the door against the body to be sure the striker allows a flush fit. If the door latches properly, tighten the screws and recheck.

Component Location Index

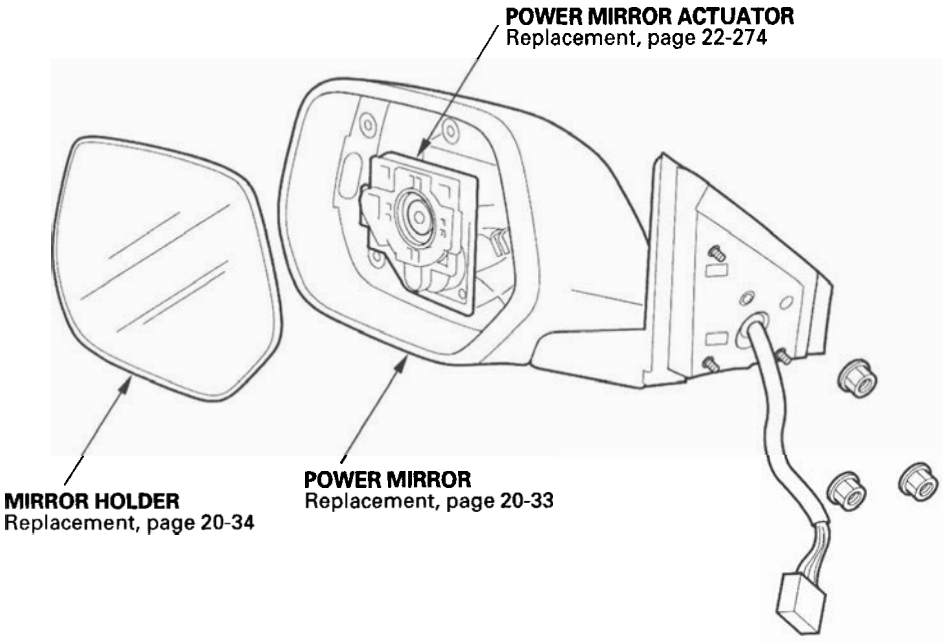

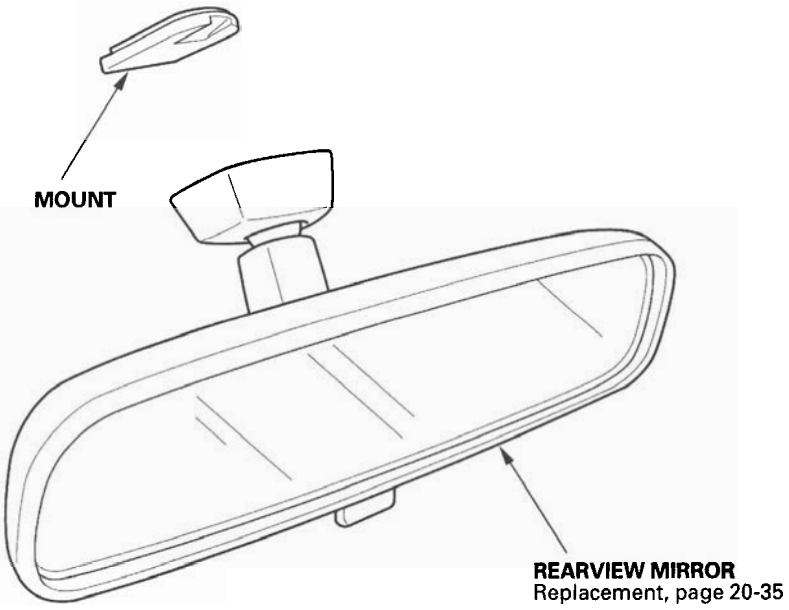

Power Mirror Replacement

Special Tools Required
KTC trim tool set SOJATP2014 *
* Available through the American Honda Tool and Equipment Program; call 888-424-6857

NOTE:
- Use the appropriate tool from the KTC trim tool set to avoid damage when prying components.
- Take care not to scratch the door and related parts.

1. Raise the door glass fully.

2. Pry up on the edge of the mirror mount cover (A) with a trim tool to detach the pin (B), and gently pull out the cover to detach the clips (C) from the door.

Fastener Locations
B ▷ : Pin, 1 C ▷ : Clip, 2

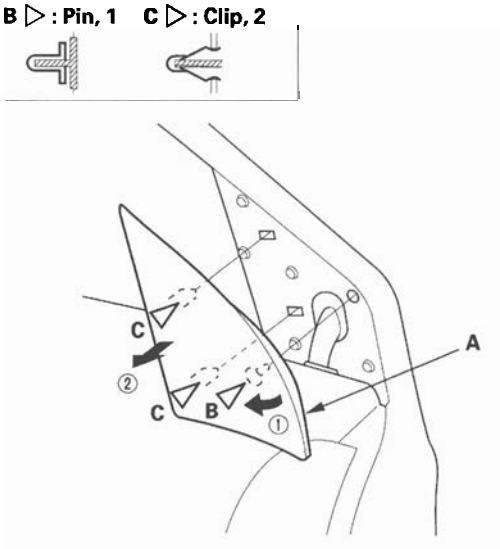

3. Remove the front door panel (see page 20-6).

4. Disconnect the connector (A).

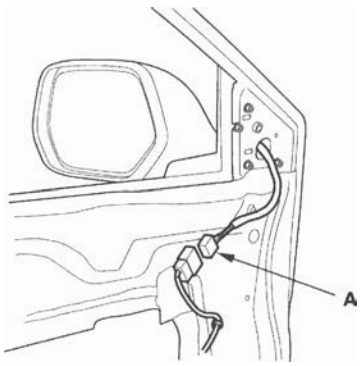

5. Remove the nuts.

Fastener Locations
● : Nut, 3

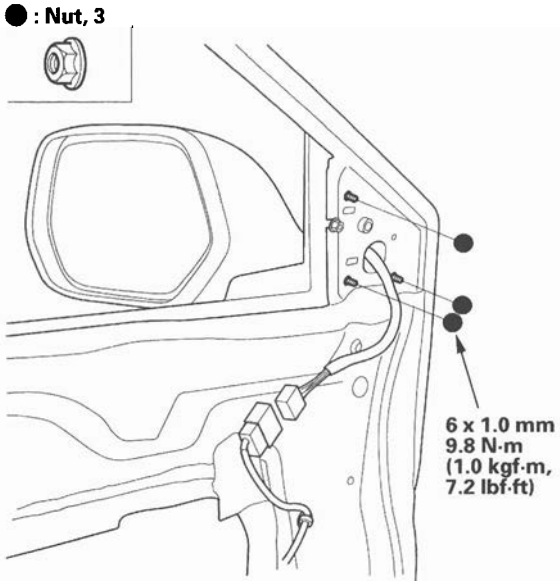

6. While holding the mirror (A), pull the harness (B) out through the hole in the door. Take care not to scratch the door.

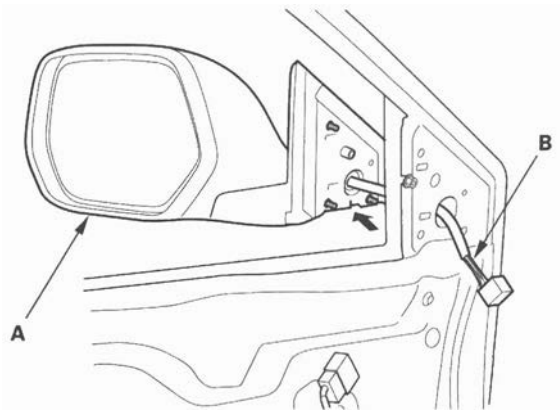

7. Install the mirror in the reverse order of removal, and note these items:

- Make sure the connector is plugged in properly.
- Check if the clips are damaged or stress-whitened, and if necessary, replace them with new ones.
- Push the clips and hooks into place securely.

Mirror Holder Replacement

NOTE: Put on gloves to protect your hands.

1. Carefully push on the top edge of the mirror holder (A) by hand.

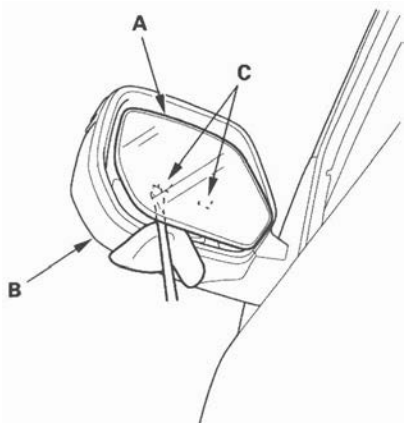

2. Put a shop towel in the opening between the lower edge of the mirror holder and the mirror housing (B) to prevent scratches, and detach the bottom clips (C) with a flat-tip screwdriver wrapped with protective tape.

3. Carefully pull out the bottom edge of the mirror holder (A) to separate the adhesive (B).

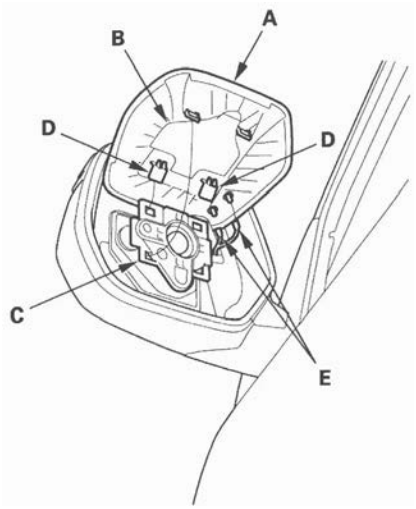

4. Separate the mirror holder from the actuator (C) by releasing the hooks (D). If equipped, disconnect the mirror defogger connectors (E).

5. Before reinstalling the mirror holder to the inner holder (A) of the actuator, check the actuator rods (B) and the actuator boots (C):

   - If a rod is out of the actuator hole, insert it securely.
   - Each rod should be covered with a boot. If not, adjust the boot into the proper position.

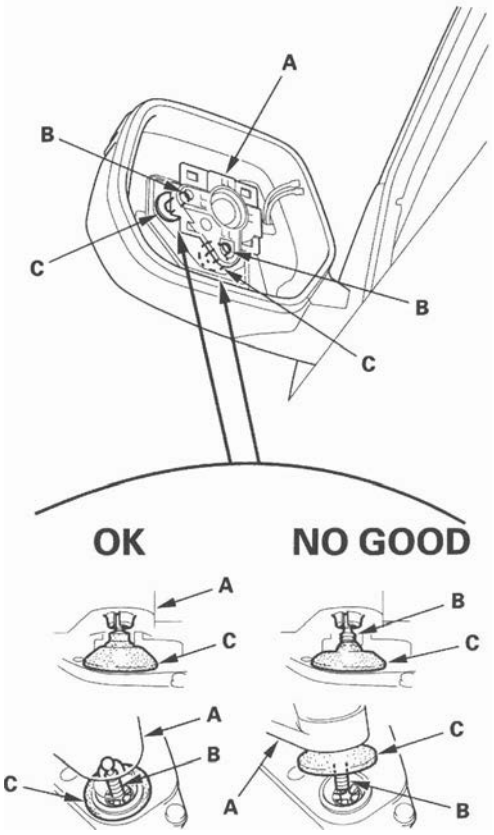

6. If equipped, reconnect the mirror defogger connectors.

7. Reattach the hooks of the mirror holder to the actuator, then position the mirror holder on the actuator. Carefully push on the clip portions of the mirror holder until the mirror holder locks into place.

8. Check the actuator operation.

Rearview Mirror Replacement

1. Release the hooks (A), then pull the mirror base cover (B) down.

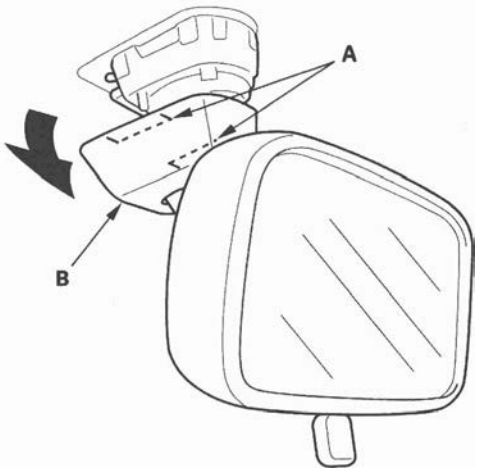

2. Pull the hook (A) down to release it from the mount (B), and slide the mirror base (C) rearward, then remove the rearview mirror (D).

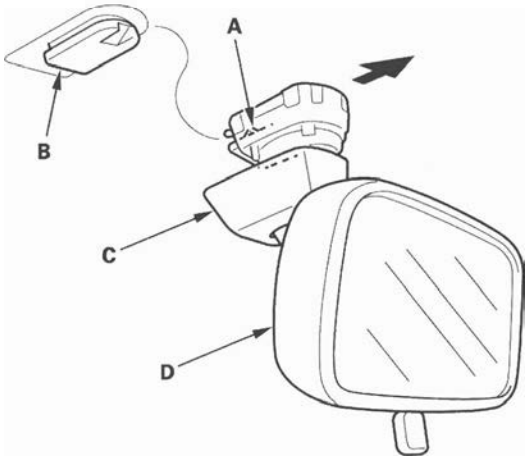

3. Install the mirror base cover on the mirror base securely.

4. Fit the mirror base (A) over the mount (B), and secure the rearview mirror with the spring (C) and hook (D).

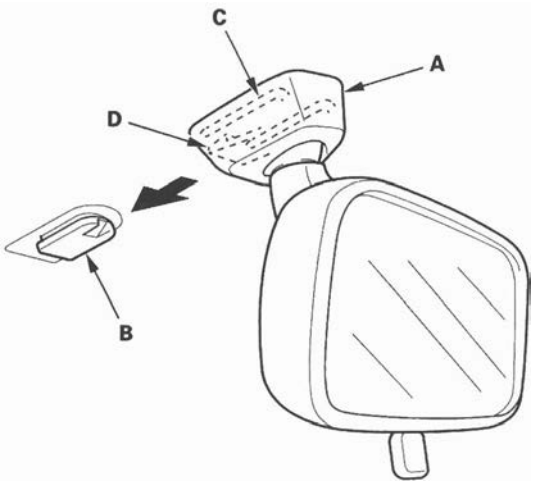

Component Location Index

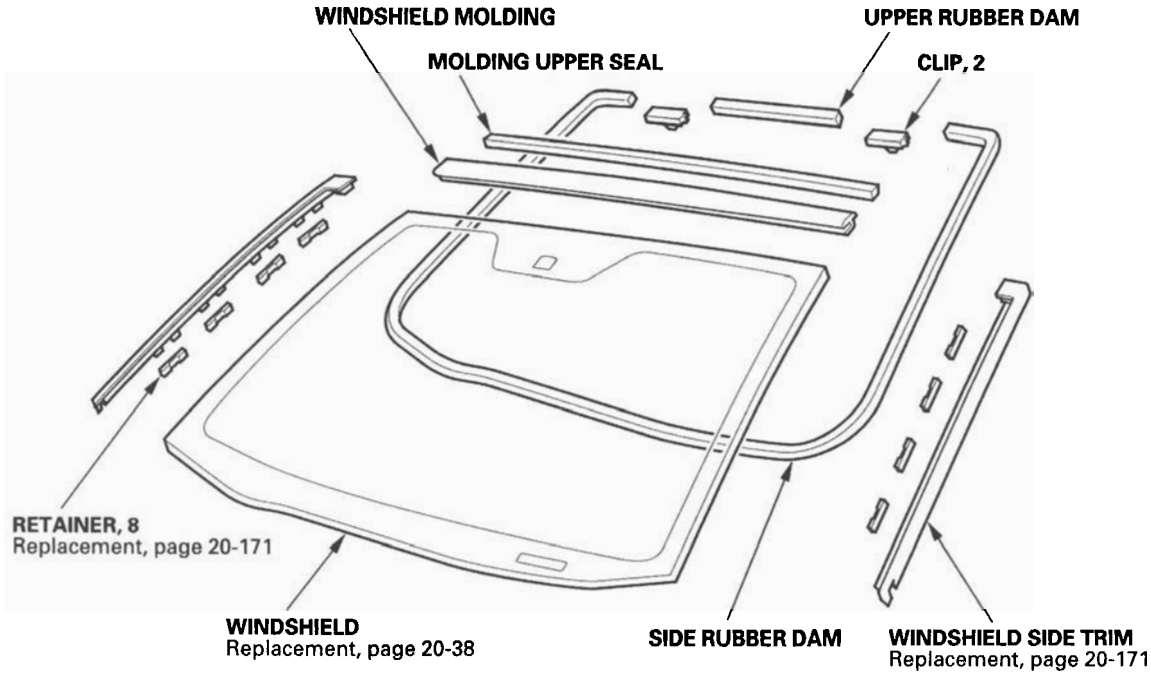

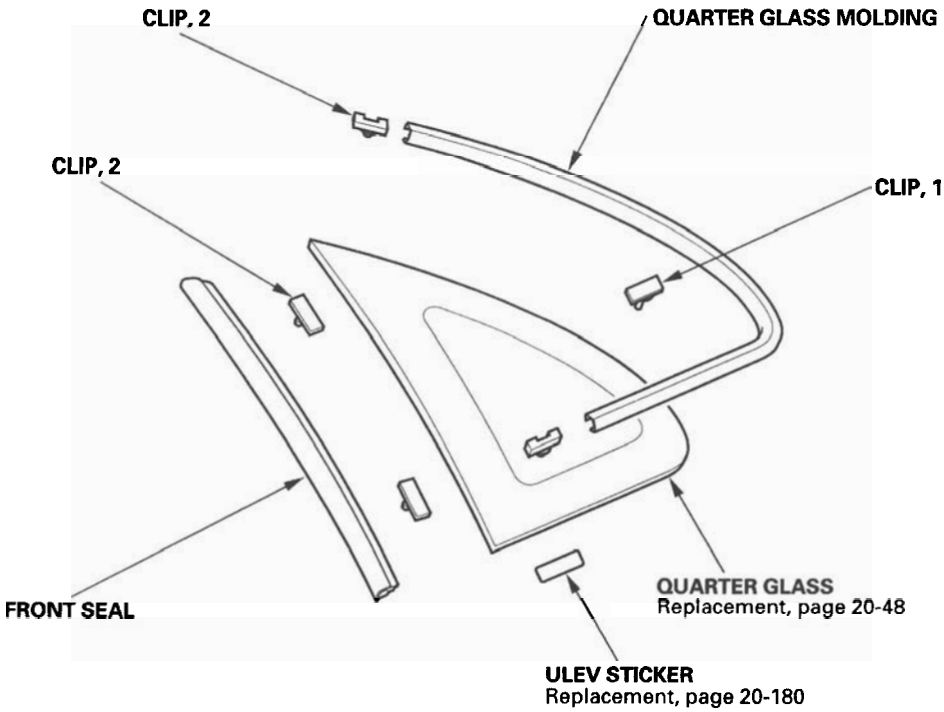

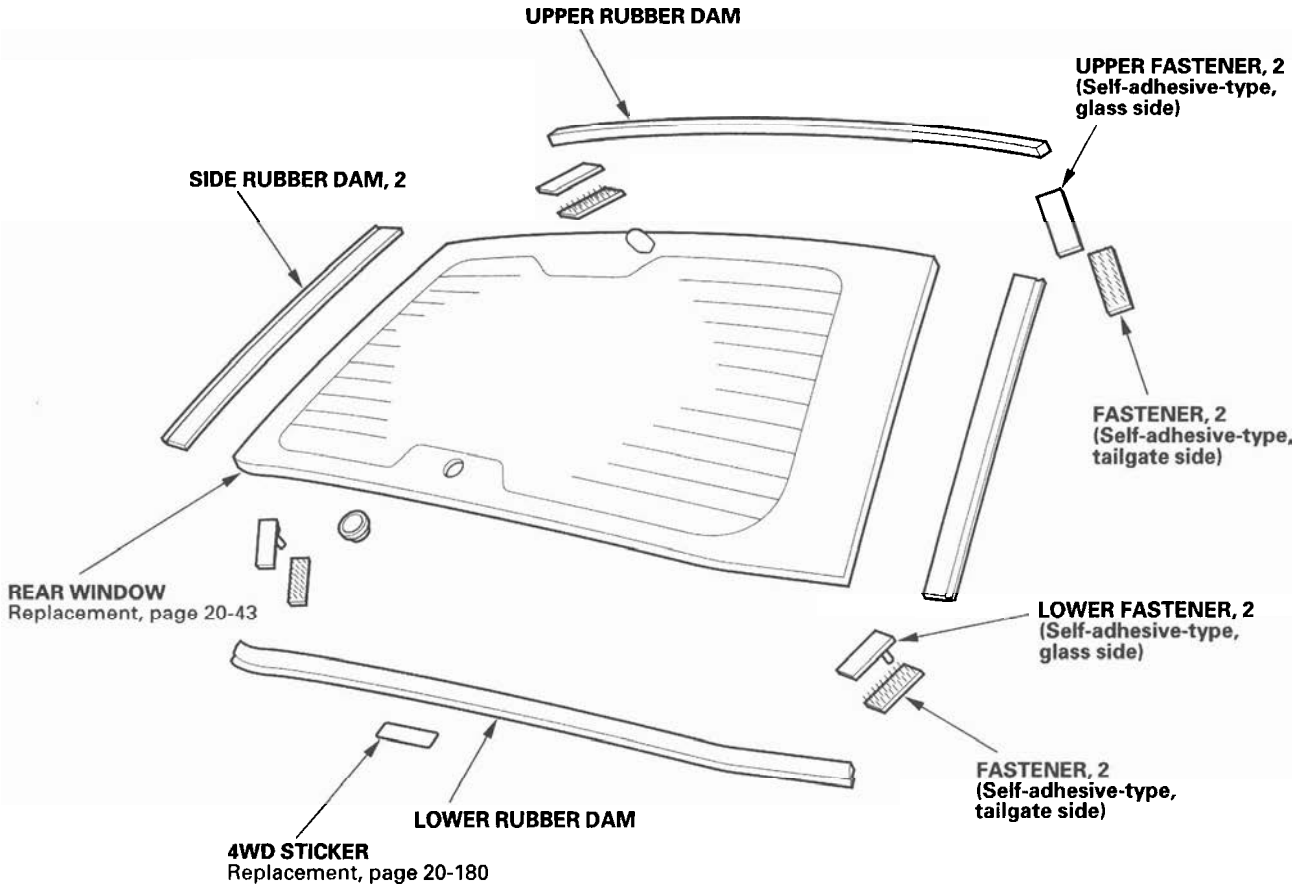
UPPER RUBBER DAM
UPPER FASTENER, 2
(Self-adhesive-type,
glass side)
SIDE RUBBER DAM, 2
FASTENER, 2
(Self-adhesive-type,
tailgate side)
REAR WINDOW
Replacement, page 20-43
LOWER FASTENER, 2
(Self-adhesive-type,
glass side)
FASTENER, 2
(Self-adhesive-type,
tailgate side)
LOWER RUBBER DAM
4WD STICKER
Replacement, page 20-180

Windshield Replacement

NOTE:
- Put on gloves to protect your hands.
- Wear eye protection when removing the glass with piano wire.
- Use seat covers to avoid damaging the seat.
- When replacing a broken windshield, a commercially available windshield cutter can be efficiently used for cutting the adhesive. Follow the equipment manufacturer's instructions.

1. Remove these items:
   - Rearview mirror (see page 20-35)
   - Windshield side trims (see page 20-171)
   - Windshield wiper arms (see page 22-219)
   - Cowl covers (see page 20-167)

2. Remove the molding (A) from the upper edge of the windshield (B). If necessary, cut the molding with a utility knife.

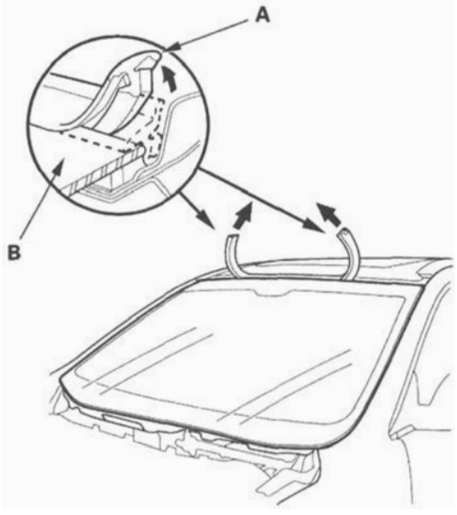

3. If the old windshield is to be reinstalled, make alignment marks (A) across the glass and body with a grease pencil.

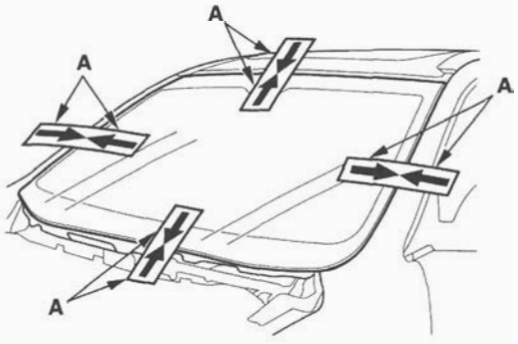

4. Pull down the front portion of the headliner (see page 20-83). Take care not to bend the headliner excessively, or you may crease or break it.

5. Apply protective tape along the edge of the dashboard and body. Using an awl, make a hole through the rubber dam, adhesive, and dashboard seal from inside the vehicle at the corner portion of the windshield. Push a piece of piano wire through the hole, and wrap each end around a piece of wood.

6. With a helper on the outside, pull the piano wire (A) back and forth in a sawing motion. Hold the piano wire as close to the windshield (B) as possible to prevent damage to the body and dashboard. Carefully cut through the rubber dam and adhesive (C) around the entire windshield.

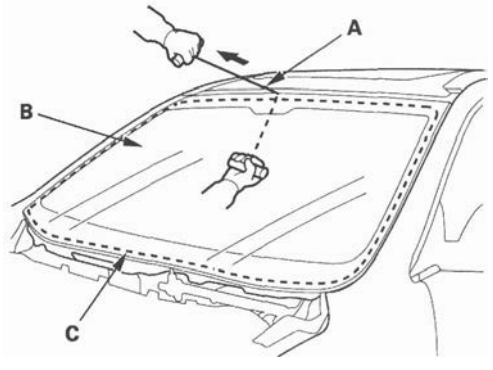

Cutting portions

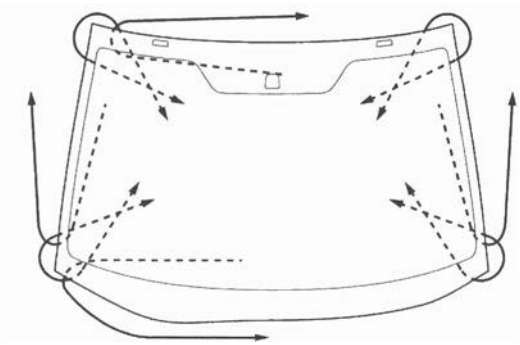

7. Carefully remove the windshield.

8. With a knife, scrape the old adhesive smooth to a thickness of about 2 mm (0.08 in.) on the bonding surface around the entire windshield opening flange:

   - Do not scrape down to the painted surface of the body; damaged paint will interfere with proper bonding.
   - Remove the rubber dam and fasteners from the body.

9. Clean the body bonding surface with a sponge dampened in isopropyl alcohol. After cleaning, keep oil, grease and water from getting on the clean surface.

10. If the old windshield is to be reinstalled, use a putty knife to scrape off all of the old adhesive, the fasteners and the rubber dam from the windshield. Clean the inside face and the edge of the windshield with isopropyl alcohol where new adhesive is to be applied. Make sure the bonding surface is kept free of water, oil, and grease.

11. Attach the side rubber dam (A), upper rubber dam (B), and clips (C) with adhesive tapes to the inside face of the windshield (D) as shown:

    - Be sure the rubber dams and clips line up with the alignment marks (E, F, G).
    - Be careful not to touch the windshield where adhesive will be applied.

    Rubber dams adhesive tape:
    Thickness 0.16 mm (0.006 in.)
    Width 3.5 mm (0.14 in.)
    Clips adhesive tape:
    Thickness 0.4 mm (0.02 in.)
    Width 13 mm (0.51 in.)

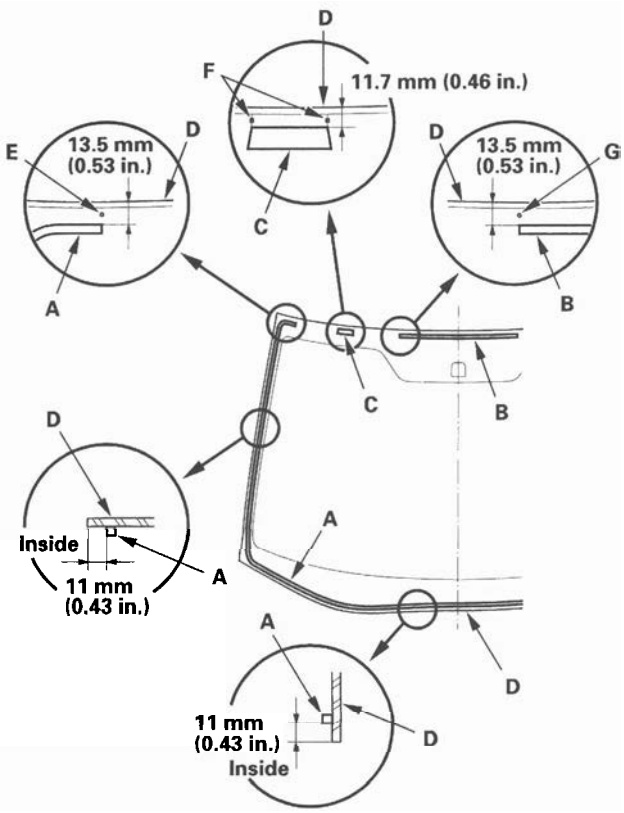

(cont'd)

Windshield Replacement (cont'd)

12. Attach the molding (A) with adhesive tape to the upper edge of the windshield (B). Be careful not to touch the windshield where adhesive will be applied.

Adhesive tape: Thickness 0.8 mm (0.03 in.)
Width 4 mm (0.16 in.)

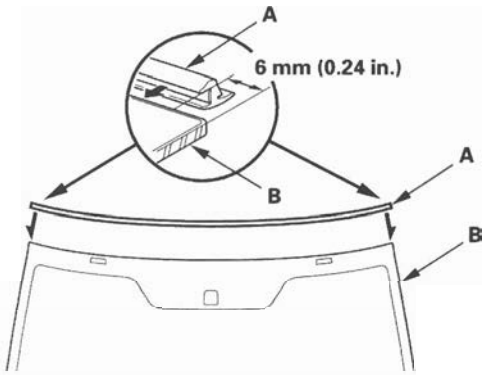

13. Attach the molding upper seal (A) with adhesive tape to the inside surface of the molding (B) as shown.

////// : **Apply primer here.**

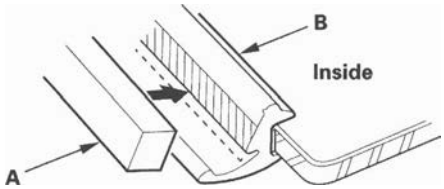

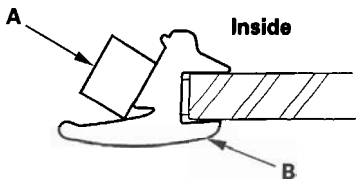

14. Set the windshield (A) in the opening, and center it. Make alignment marks (B) across the windshield and body with a grease pencil at the four points shown. Make sure both clips (C) contact with the edge of the body holes. Be careful not to touch the windshield where adhesive will be applied.

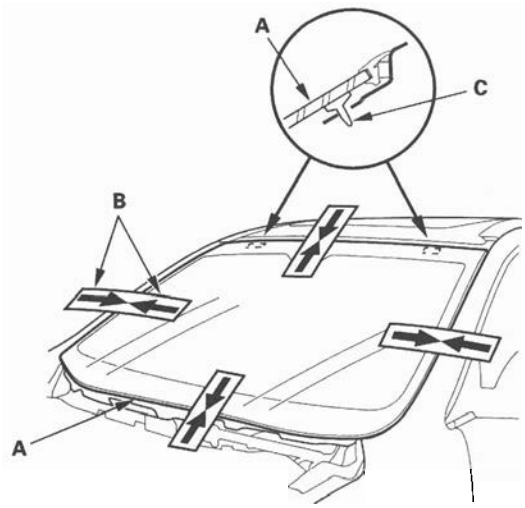

15. Remove the windshield.

16. With a sponge, apply a light coat of glass primer around the edge of the windshield (A) between the rubber dams (B, C) and molding (D) as shown, then lightly wipe it off with gauze or cheesecloth:

    - Apply glass primer to the molding.
    - Do not apply body primer to the windshield, and do not get body and glass primer sponges mixed up.
    - Never touch the primed surfaces with your hands. If you do, the adhesive may not bond to the windshield properly, causing a leak after the windshield is installed.
    - Keep water, dust, and abrasive materials away from the primed surfaces.

    ////// : **Apply glass primer here.**

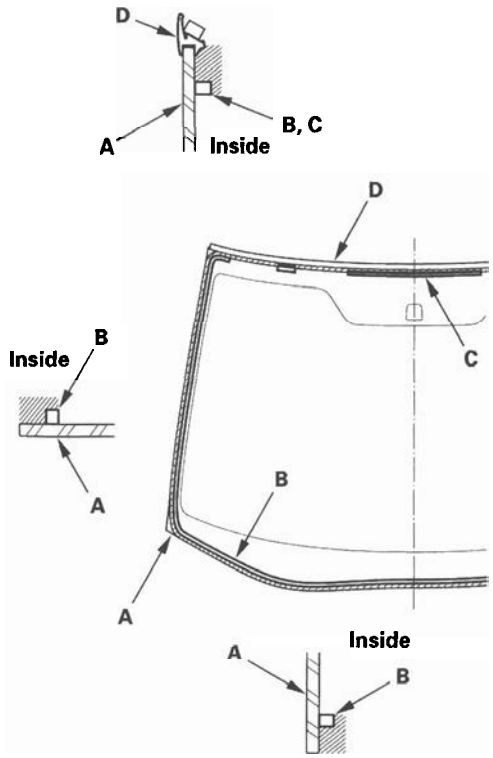

17. With a sponge, apply a light coat of body primer to the original adhesive remaining around the windshield opening flange. Let the body primer dry for at least 10 minutes:

    - Be careful not to mix up the body and glass primer sponges.
    - Never touch the primed surfaces with your hands.
    - Mask off the dashboard before painting the flange.

    ////// : **Apply body primer to any exposed paint as shown.**

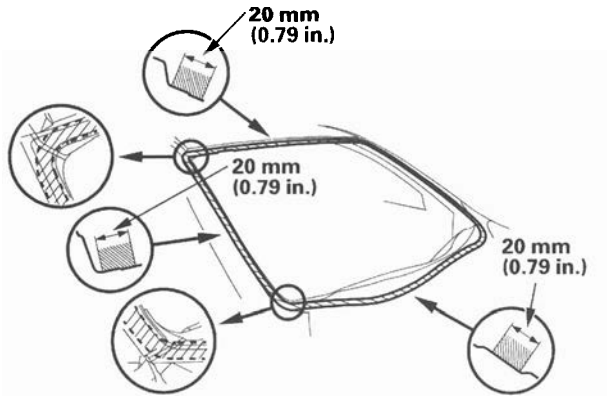

18. Cut a "V" in the end of the nozzle (A) on the adhesive cartridge as shown.

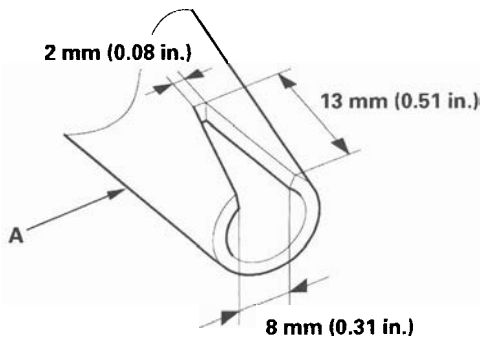

(cont'd)

Windshield Replacement (cont'd)

19. Put the cartridge in a caulking gun, and run a bead of adhesive (A) around the edge of the windshield (B) between the rubber dams (C) and molding (D) as shown. Apply the adhesive within 30 minutes after applying the glass primer. Make a slightly thicker bead at each corner.

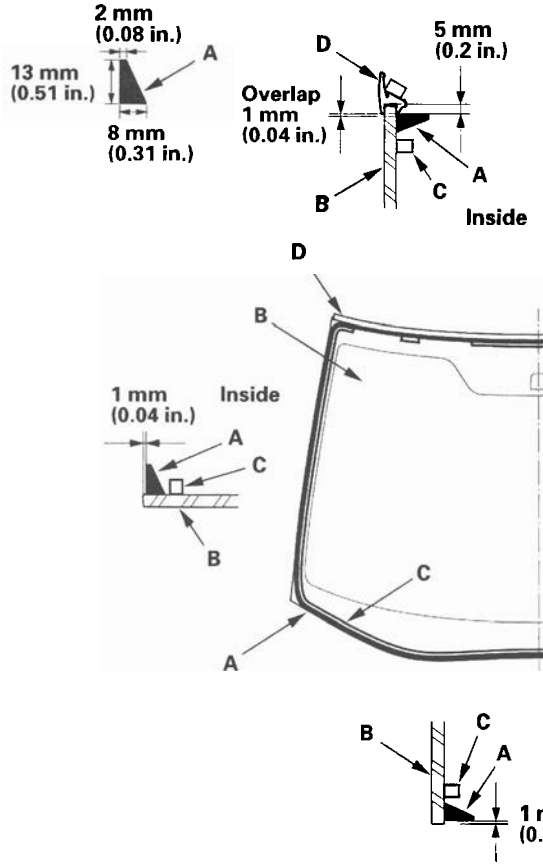

20. Use suction cups to hold the windshield over the opening, align it with the alignment marks made in step 14, and set it down on the adhesive. Lightly push on the windshield until its edges are fully seated on the adhesive all the way around.

    NOTE: Do not open or close the doors until the adhesive is dry.

21. Scrape or wipe the excess adhesive off with a putty knife or towel. To remove adhesive from a painted surface or the windshield, wipe with a soft shop towel dampened with isopropyl alcohol.

22. After the adhesive has dried, then spray water over the windshield and check for leaks. Mark leaking areas, and let the windshield dry, then seal with sealant:

    - Let the vehicle stand for at least 4 hours after windshield installation. If the vehicle has to be used within the first 4 hours, it must be driven slowly.
    - Keep the windshield dry for the first hour after installation.

23. Reinstall all remaining removed parts. Install the rearview mirror after the adhesive has dried thoroughly. Advise the customer not to do the following things for 2 to 3 days:
    - Slam the doors with all the windows rolled up.
    - Twist the body excessively (such as when going in and out of driveways at an angle or driving over rough, uneven roads).

Rear Window Replacement

NOTE:
- Put on gloves to protect your hands.
- Wear eye protection when removing the glass with piano wire.
- Use seat covers to avoid damaging any surfaces.
- Do not damage the rear window defogger grid lines and terminals.

1. Remove these items:
   - Tailgate lower trim panel (see page 20-78)
   - High mount brake light (see page 22-166)
   - Rear window washer nozzle (see page 22-224)
   - Rear window wiper arm (see page 22-221)

2. Remove the lower rubber dam (A) and side rubber dams (B) from the edges of the rear window (C). If necessary, cut the rubber dams with a utility knife.

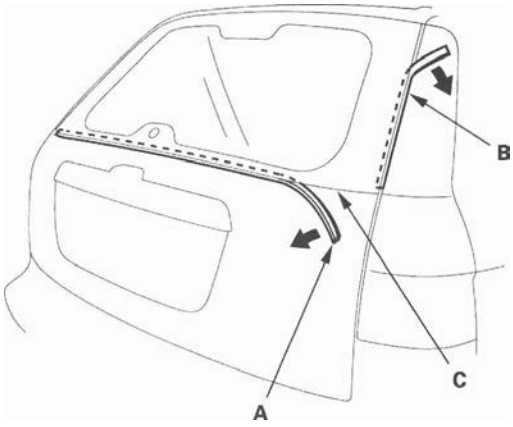

3. Disconnect the rear window defogger connectors (A).

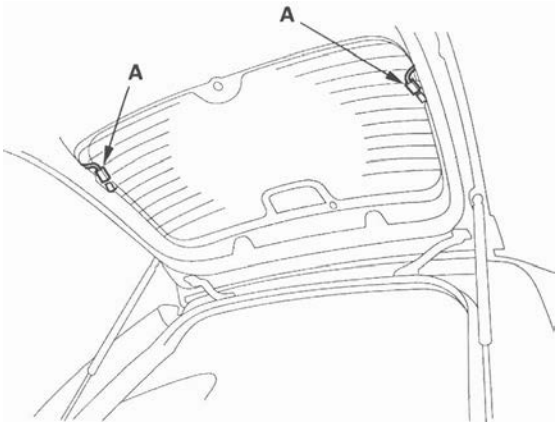

4. If the old rear window is to be reinstalled, make alignment marks (A) across the glass and body with a grease pencil.

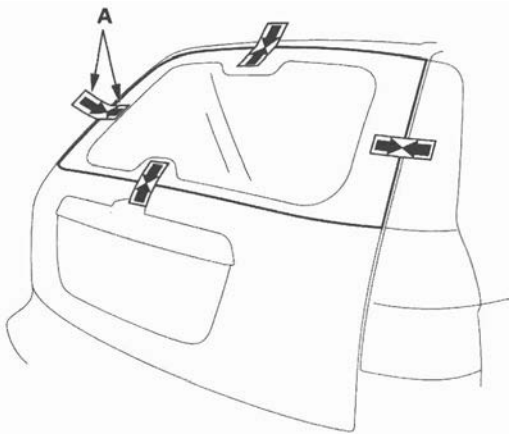

(cont'd)

Rear Window Replacement (cont'd)

5. Apply protective tape along the inside and outside edges of the tailgate. Using an awl, make a hole through the adhesive from inside the vehicle at the corner portion of the rear window. Push the piano wire through the hole, and wrap each end around a piece of wood.

6. With a helper on the outside, pull the piano wire (A) back and forth in a sawing motion. Hold the piano wire as close to the rear window (B) as possible to prevent damage to the tailgate, and carefully cut through the adhesive (C) around the entire rear window.

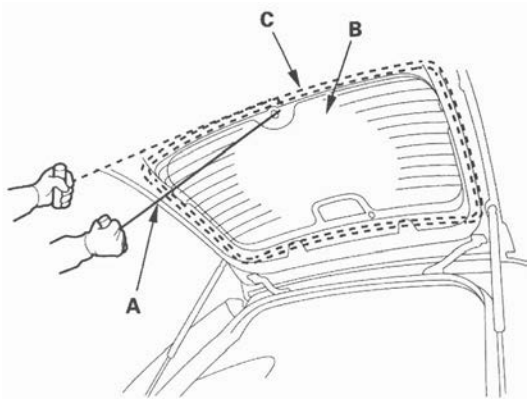

Cutting portions

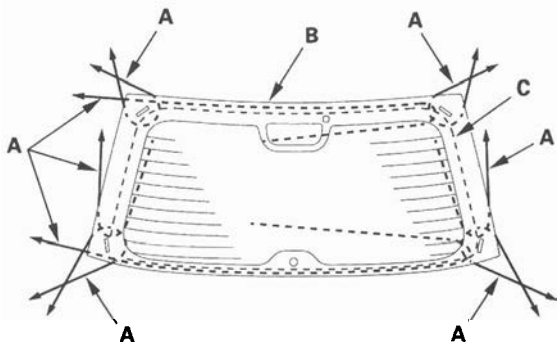

7. Carefully remove the rear window.

8. With a putty knife, scrape the old adhesive smooth to a thickness of about 2 mm (0.08 in.) on the bonding surface around the entire rear window opening flange:

   - Do not scrape down to the painted surface of the body; damaged paint will interfere with proper bonding.
   - Remove the fasteners from the tailgate.

9. Clean the tailgate bonding surface with a sponge dampened in isopropyl alcohol. After cleaning, keep oil, grease and water from getting on the surface.

10. If the old rear window is to be reinstalled, use a putty knife to scrape off all of the old adhesive, the fasteners and the rubber dams from the rear window. Clean the inside face and the edge of the rear window with isopropyl alcohol where new adhesive is to be applied. Make sure the bonding surface is kept free of water, oil, and grease.

11. Attach the fasteners (A), upper rubber dam (B), side rubber dams (C), and lower rubber dam (D) with adhesive tape to the inside face of the rear window (E) as shown. Before installing the side and lower rubber dams, apply primer to the inside face of the rear window.

    - Be sure the fasteners and upper rubber dam line up with alignment marks (F).
    - Be careful not to touch the rear window where adhesive will be applied.

    Fasteners adhesive tape:
    Thickness 0.6 mm (0.024 in.)
    Width 7.5 mm (0.30 in.)
    Upper rubber dam adhesive tape:
    Thickness 0.16 mm (0.006 in.)
    Width 3 mm (0.12 in.)
    Side rubber dams adhesive tape:
    Thickness 0.4 mm (0.016 in.)
    Width 19.5 mm (0.77 in.)
    Lower rubber dam adhesive tape:
    Thickness 0.16 mm (0.006 in.)
    Width 4.5 mm (0.18 in.)

    ////// : **Apply glass primer here.**

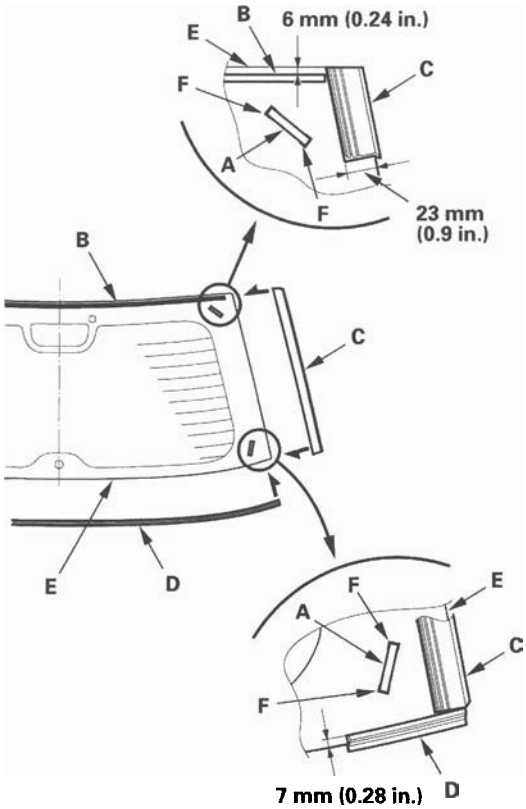

12. Cut the excess side rubber dam and lower rubber dam along both beveled edges of the rear window.

13. Attach the fasteners (A, B) with adhesive tape to the tailgate as shown.

    Fasteners adhesive tape:
    Thickness 0.6 mm (0.024 in.)
    Width 7.5 mm (0.30 in.)

    Fastener Locations
    A ▷: Fastener, 2 B ▷: Fastener, 2

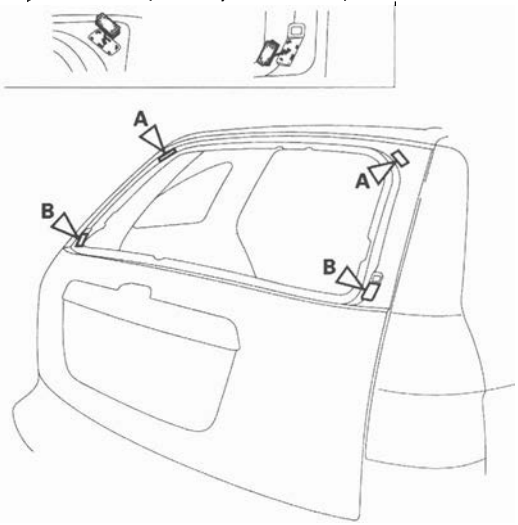

(cont'd)

Rear Window Replacement (cont'd)

14. Set the rear window (A) in the opening, and center it. Make alignment marks (B) across the rear window and body with a grease pencil at the four points shown. Make sure both clips (C) contact with the holes of the tailgate corner. Be careful not to touch the rear window where adhesive will be applied.

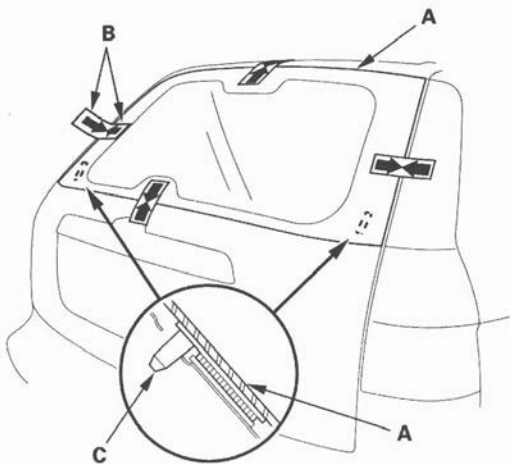

15. Remove the rear window.

16. With a sponge, apply a light coat of glass primer around the edge of the rear window (A) and along the rubber dams (B) as shown, then lightly wipe it off with gauze or cheesecloth:

- With the printed dots (C) on the rear window as a guide, apply the glass primer to both side portions of the rear window.
- Do not apply body primer to the rear window, and do not get tailgate and glass primer sponges mixed up.
- Never touch the primed surfaces with your hands. If you do, the adhesive may not bond to the rear window properly, causing a leak after the rear window is installed.
- Keep water, dust, and abrasive materials away from the primed surface.

: **Apply glass primer here.**

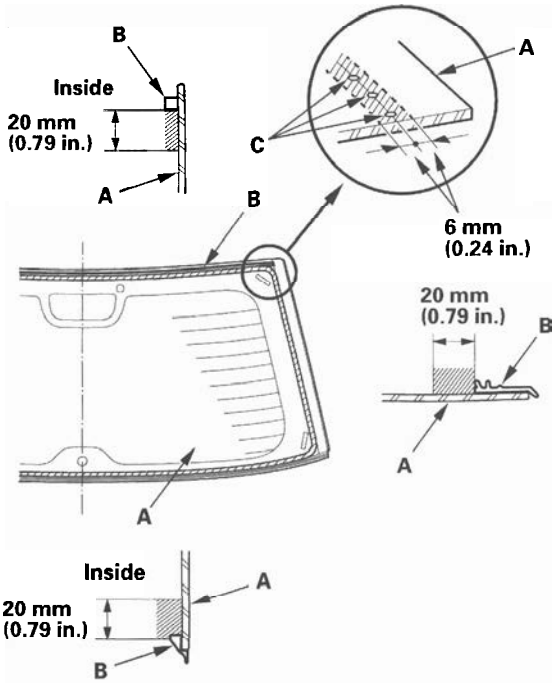

17. With a sponge, apply a light coat of body primer to the original adhesive remaining around the rear window opening flange. Let the body primer dry for at least 10 minutes:

    - Be careful not to mix up the body and glass primer sponges.
    - Never touch the primed surfaces with your hands.

    ////// : **Apply body primer here.**

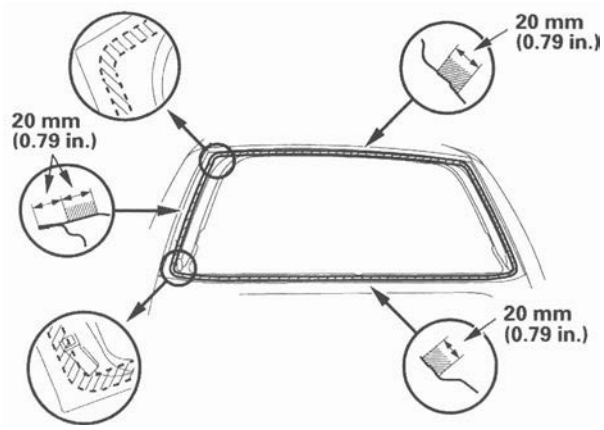

18. Cut a "V" in the end of the adhesive cartridge nozzle (A) as shown.

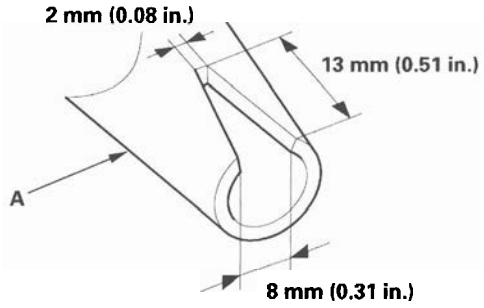

19. Put the cartridge in a caulking gun, and run a bead of adhesive (A) on the glass primer trace (B) around the edge of the rear window (C) and along the rubber dams (D) as shown.
    Apply the adhesive within 30 minutes after applying the glass primer. Make a slightly thicker bead at each corner.

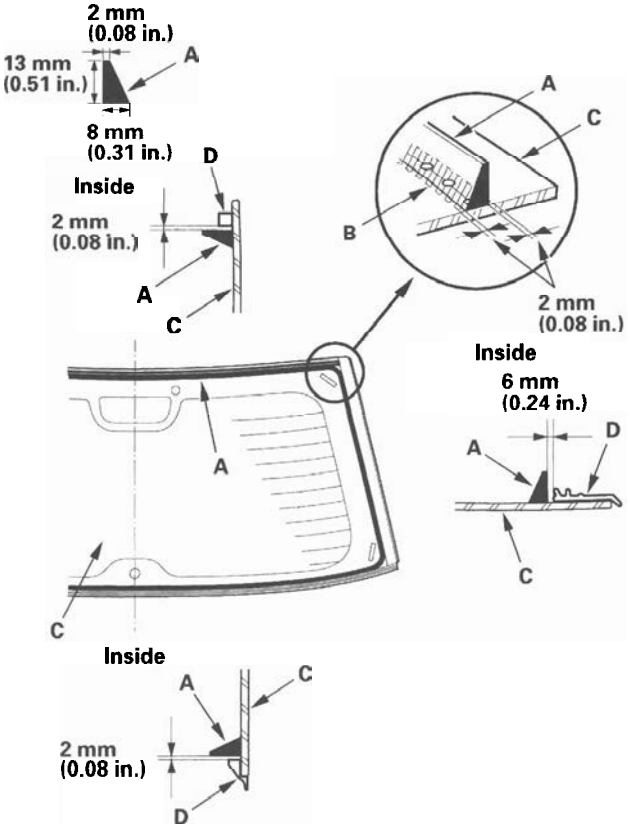

(cont'd)

Rear Window Replacement (cont'd)

20. Use suction cups to hold the rear window over the opening, align it with the alignment marks you made in step 14, and set it down on the adhesive. Lightly push on the rear window until its edges are fully seated on the adhesive all the way around.

    NOTE: Do not open or close any of the doors for about an hour until the adhesive is dry.

21. Scrape or wipe the excess adhesive off with a putty knife or towel. To remove adhesive from a painted surface or the rear window, use a soft shop towel dampened with isopropyl alcohol.

22. After the adhesive has dried, spray water over the rear window and check for leaks. Mark the leaking areas, let the rear window dry, then seal with sealant. Let the vehicle stand for at least 4 hours after rear window installation. If the vehicle has to be used within the first 4 hours, it must be driven slowly.

23. Reinstall all remaining removed parts.

    NOTE: Advise the customer not to do the following things for 2 to 3 days:
    - Slam the doors with all the windows rolled up.
    - Twist the body excessively (such as when going in and out of driveways at an angle or driving over rough, uneven roads).

Quarter Glass Replacement

NOTE:
- Put on gloves to protect your hands.
- Wear eye protection when removing the glass with piano wire.
- Use seat covers to avoid damaging any surfaces.
- The quarter glass molding will need replacement because it will be damage during glass removal.

1. Remove the quarter pillar glass trim (see page 20-74).

2. Remove the front seal (A) from the front edge of the quarter glass (B). If necessary, cut the seal with a utility knife.

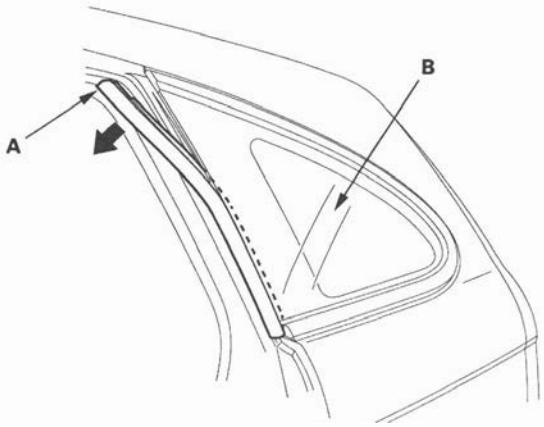

3. If the old quarter glass (A) is to be reinstalled, make alignment marks (B) across the glass and body with a grease pencil over the quarter glass molding (C).

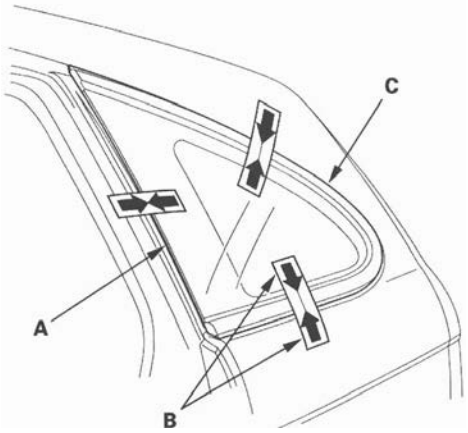

4. Apply protective tape along the inside and outside edges of the body. From pillar side the vehicle, use a knife (A) to cut the front clips (B) of the quarter glass molding (C).

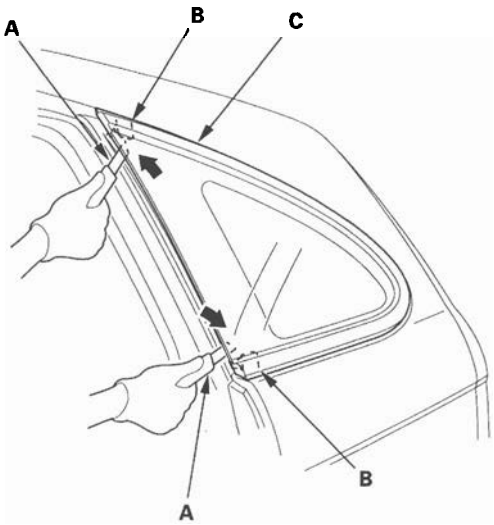

5. Using an awl, make a hole through the adhesive from inside the vehicle at the front corner portion of the quarter glass. Push a piece of piano wire through the hole, and wrap each end around a piece of wood.

6. With a helper on the outside, pull the piano wire (A) back and forth in a sawing motion. Hold the piano wire as close to the quarter glass (B) as possible to prevent damage to the body, and carefully cut through the adhesive (C) in the straight areas and front corner, but not the rear corner.

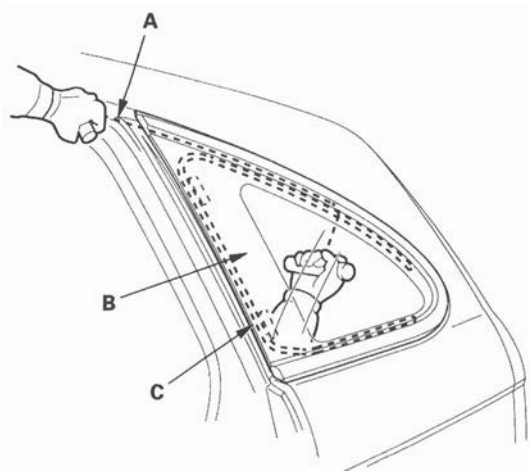

Cutting portions

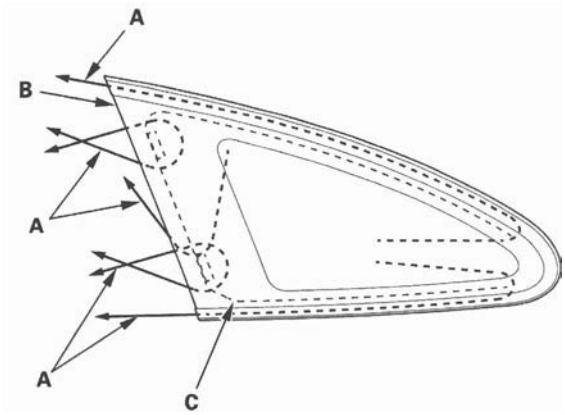

7. From inside the vehicle, use a knife (A) to cut rear clip (B) of the quarter glass molding, then cut through the adhesive (C) of quarter glass rear corner.

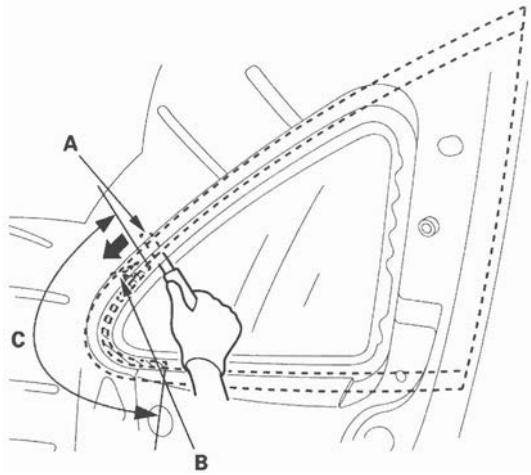

8. Carefully remove the quarter glass and quarter glass molding. Replace the molding with a new one.

(cont'd)

Quarter Glass Replacement (cont'd)

9. With a putty knife, scrape the old adhesive smooth to a thickness of about 2 mm (0.08 in.) on the bonding surface around the entire quarter glass opening flange:

   - Do not scrape down to the painted surface of the body; damaged paint will interfere with proper bonding.
   - Remove the molding from the quarter glass.

10. Clean the body bonding surface with a sponge dampened in isopropyl alcohol. After cleaning, keep oil, grease, and water from getting on the surface.

11. If the old quarter glass is to be reinstalled, use a putty knife to scrape off all of the old adhesive and clips from the quarter glass. Clean the inside face and the edge of the quarter glass with isopropyl alcohol where new adhesive is to be applied. Make sure the bonding surface is kept free of water, oil, and grease.

12. Attach the front seal (A), lower clip (B), and upper clip (C) with adhesive tapes to the inside face of the quarter glass (D) as shown. Before installing the front seal, apply primer to the inside face of the quarter glass.

    - Be careful not to touch the glass where adhesive will be applied.
    - Be sure installing the clips with its convex portions (E) downward.

    Clips adhesive tape:
    Thickness 1.2 mm (0.047 in.)
    Width 15 mm (0.59 in.)
    Front seal adhesive tape:
    Thickness 0.8 mm (0.03 in.)
    Width 6 mm (0.24 in.)

    : **Apply glass primer here.**

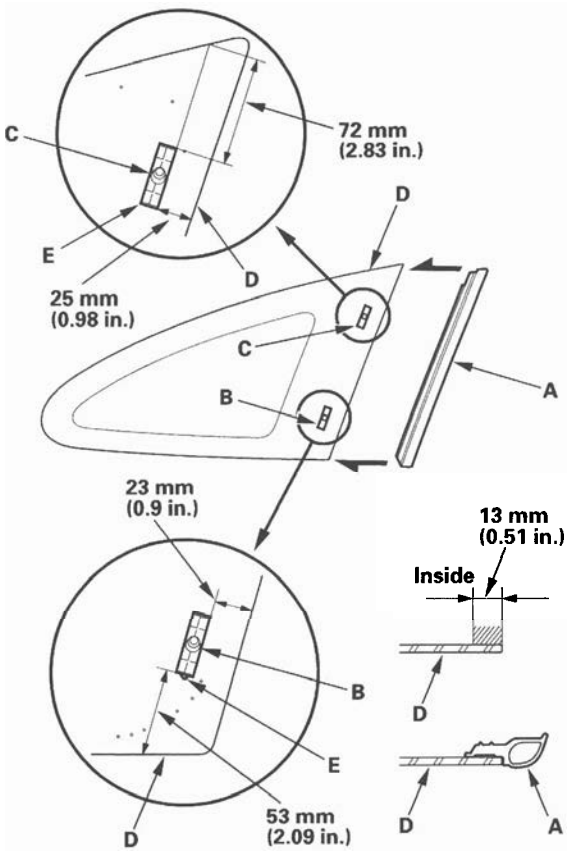

13. Set the quarter glass (A) in the opening, and make alignment marks (B) across the quarter glass and body with a grease pencil at the three points shown. Make sure both clips (C) contact with the edge of the body holes. Be careful not to touch the glass where adhesive will be applied.

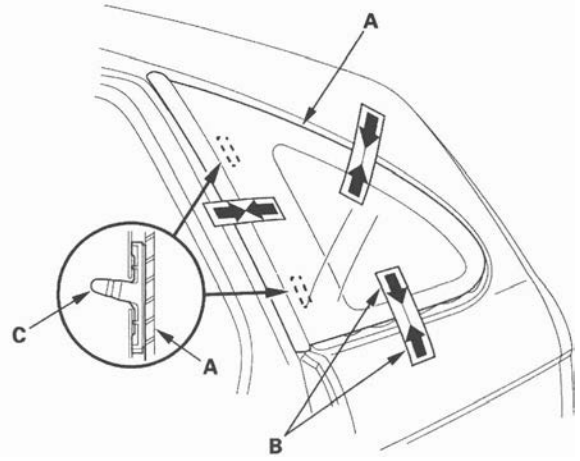

14. Remove the quarter glass.

15. Install the quarter glass molding (A).

-1 Hold the molding up on the glass, and fit the hooks (B) of the molding to the edge of the glass rear corner first.
-2 From the rear corner to the front, hook the lower clips (C) and upper clips (D) of the molding to along the edges of the glass.
-3 Push the molding into place securely.

NOTE:
- Take care not to bend or damage the molding.
- Be careful not to touch the glass where adhesive will be applied.
- Be sure the front seal contacts the upper and lower ends of the molding.

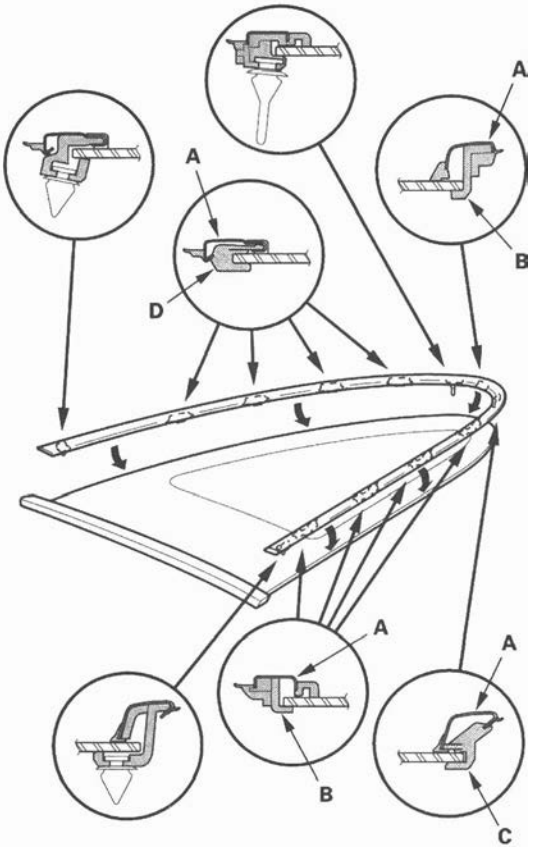

(cont'd)

Quarter Glass Replacement (cont'd)

16. With a sponge, apply a light coat of glass primer along the edge of the quarter glass (A) and front seal (B) as shown, then lightly wipe it off with gauze or cheesecloth:

    - With the printed dots (C) on the quarter glass as a guide, apply the glass primer to the rear corner, upper corner and lower corner portions of the quarter glass.
    - Do not apply body primer to the quarter glass, and do not get body and glass primer sponges mixed up.
    - Never touch the primed surfaces with your hands. If you do, the adhesive may not bond to the quarter glass properly, causing a leak after the quarter glass is installed.
    - Keep water, dust, and abrasive materials away from the primed surface.

    : **Apply glass primer here.**

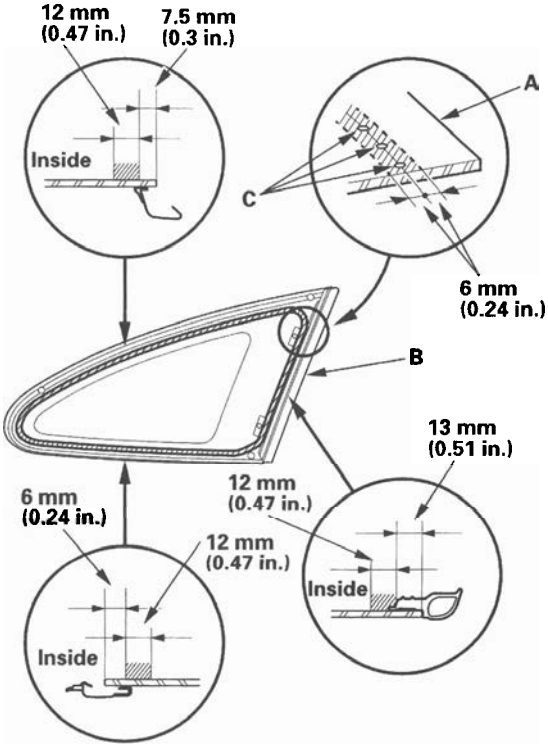

17. With a sponge, apply a light coat of body primer to the original adhesive remaining around the quarter glass opening flange. Let the body primer dry for at least 10 minutes:

    - Be careful not to mix up the body and glass primer sponges.
    - Never touch the primed surfaces with your hands.

    : **Apply glass primer here.**

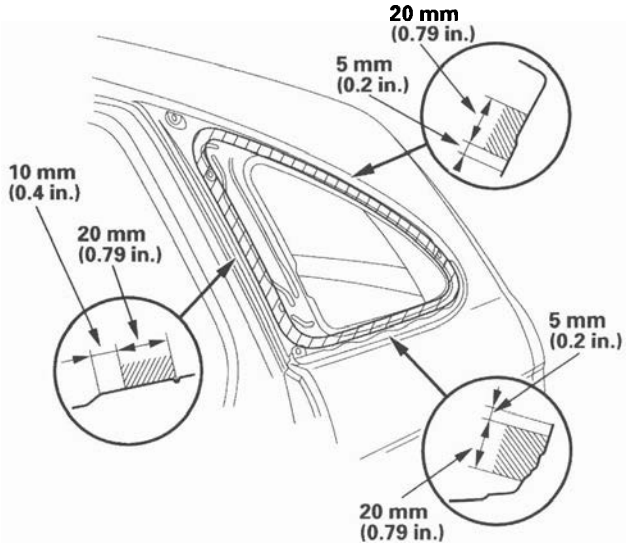

18. Cut a "V" in the end of the adhesive cartridge nozzle (A) as shown.

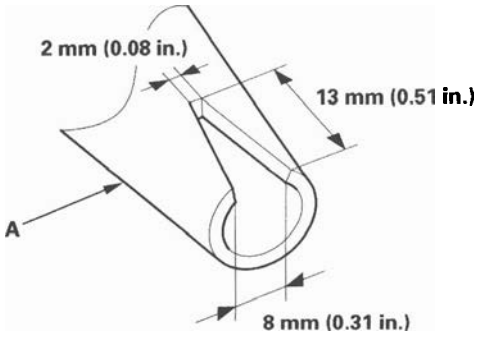

19. Put the cartridge in a caulking gun, and run a bead of adhesive (A) around the edge of the quarter glass (B) and along the front seal (C) as shown. With the printed dots on the quarter glass as a guide, apply the adhesive to the rear corner, upper corner and lower corner portions of the quarter glass. Apply the adhesive within 30 minutes after applying the glass primer. Make a slightly thicker bead at each corner.

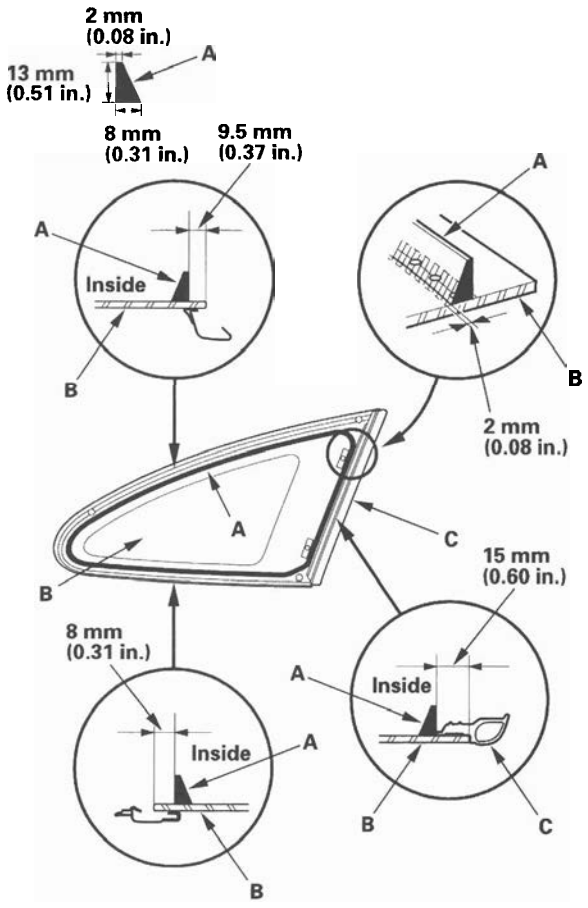

20. Use suction cups (A) to hold the quarter glass (B) over the opening, align it with the clips (C) and alignment marks (D) you made in step 13, and set it down on the adhesive. Lightly push on the quarter glass until its edges are fully seated on the adhesive all the way around.

    NOTE: Do not open or close any of the doors for about an hour until the adhesive is dry.

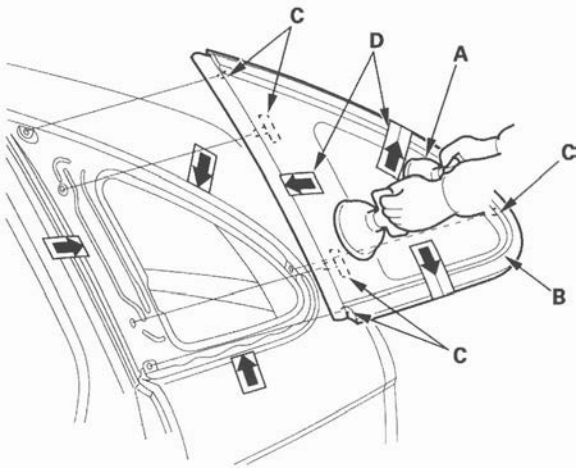

21. Scrape or wipe the excess adhesive off with a putty knife or towel. To remove adhesive from a painted surface or the quarter glass, use a soft shop towel dampened with isopropyl alcohol.

22. After the adhesive has dried, spray water over the quarter glass and check for leaks. Mark the leaking areas, let the quarter glass dry, then seal with sealant. Let the vehicle stand for at least 4 hours after quarter glass installation. If the vehicle has to be used within the first 4 hours, it must be driven slowly.

23. Reinstall all remaining removed parts.

    NOTE: Advise the customer not to do the following things for 2 to 3 days:
    - Slam the doors with all the windows rolled up.
    - Twist the body excessively (such as when going in and out of driveways at an angle or driving over rough, uneven roads).

Component Location Index

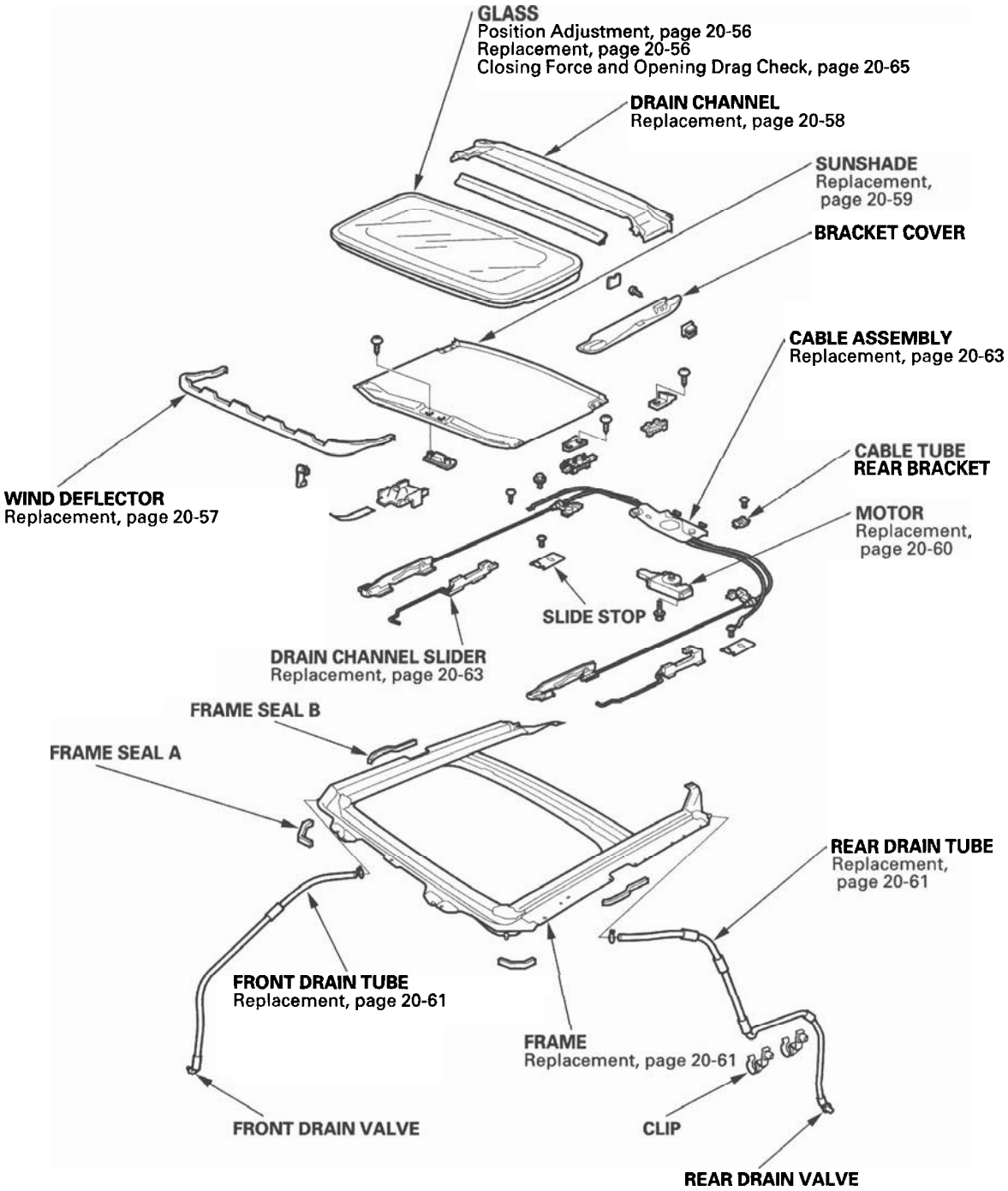

Symptom Troubleshooting Index

Symptom	Diagnostic procedure
Water leaks from moonroof	1. Check for a clogged drain tube. 2. Check for a gap between the glass weatherstrip and the roof panel. 3. Check for a defective or an improperly installed glass weatherstrip or drain channel. 4. Check for a gap between the drain seal and the roof panel. 5. Adjust the moonroof position.
Wind noise from moonroof	1. Check for excessive clearance between the glass weatherstrip and the roof panel. 2. Adjust the moonroof position.
Motor noise from moonroof	1. Check for a loose motor. 2. Check for a worn gear or bearing. 3. Check for a deformed cable assembly.
Moonroof glass does not move, but motor turns	1. Check for a defective gear or inner cable. 2. Check for foreign matter stuck between the guide rail and the slider. 3. Check for a loose inner cable. 4. Make sure the cable assembly is attached properly.
Moonroof glass does not move and motor does not turn (glass can be moved with moonroof wrench)	1. Check for a blown fuse. 2. Check for a faulty moonroof switch. 3. Check for a run down battery. 4. Check for a defective motor control unit.
Moonroof glass does not stop at proper flush closed position	1. Reset the moonroof control unit (see page 22-258). 2. Check glass position adjustment.
Moonroof glass moves in a jerking motion (moves 40 mm (1.57 in.), stops for 0.4 seconds, and repeats)	Reset the moonroof control unit (see page 22-258).
During auto close operation, moonroof glass reverses when no object is trapped	Check for dirt and debris in the track. Reset the moonroof control unit (see page 22-258).
Moonroof glass moves, but there is no AUTO function	Reset the moonroof control unit (see page 22-258).

Moonroof

Glass Position Adjustment

The roof panel (A) should be even with the glass weatherstrip (B), to within 0.4+0.6/−0.4 mm (0.01+0.02/−0.01 in.) all the way around, and should be to length of between the roof panel and glass, to within 13.5+1/−1 mm (0.55+0.04/−0.04 in). If not, make the following adjustment:

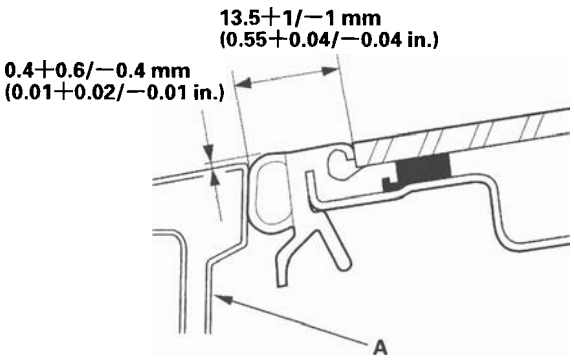

1. Remove the bracket cover.
2. Adjust the glass (A).
   -1 Using a T25 TORX bit, slightly loosen the bolts.
   -2 Move the glass up or down and forward or rearward.
   -3 Tighten all bolts securely.

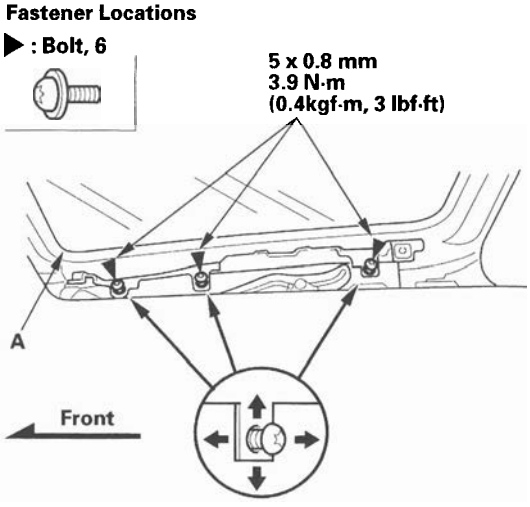

3. If necessary, repeat on the opposite side.

Glass Replacement

1. Close the glass fully.
2. Slide the sunshade all the way back.
3. Pry out the lid (A), remove the screws (B), and release the hooks (C), then remove both bracket covers (D). With a T25 TORX bit, remove the bolts (E) from both glass brackets (F).

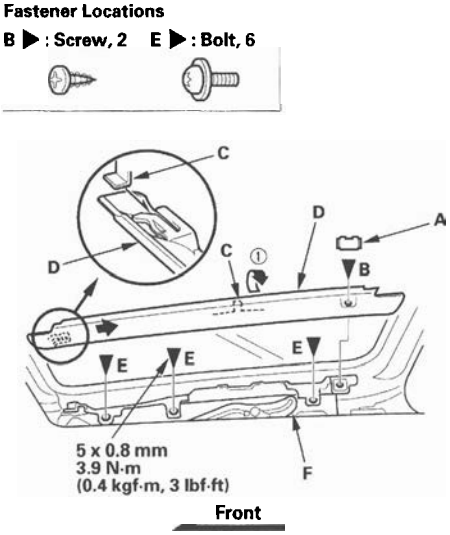

4. Remove the glass (A) by lifting it up. Do not damage the roof panel.

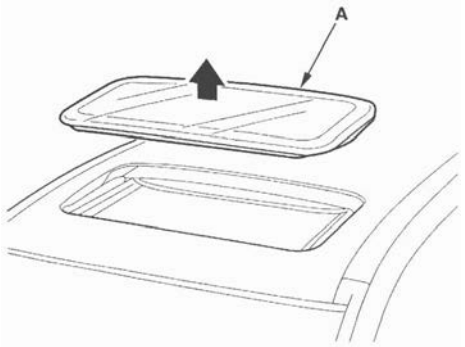

5. Install the glass in the reverse order of the removal, and adjust the glass position alignment.
6. Check for water leaks. Use free-flowing water from a hose without a nozzle. Do not use high-pressure water.

   NOTE: It is normal for some water to seep past the moonroof into the moonroof frame, and exit through the drains.

Wind Deflector Replacement

1. Open the glass fully.
2. Remove the links (A) from both sides.

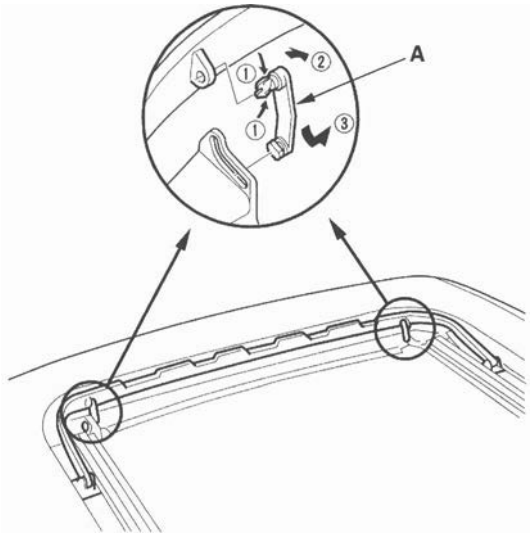

3. Remove the wind deflector (A).

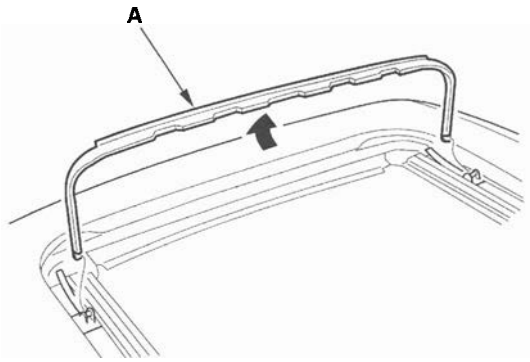

4. Pry up on the deflector bases (A) and release the hooks (B), then remove the bases with springs (C) from both sides.

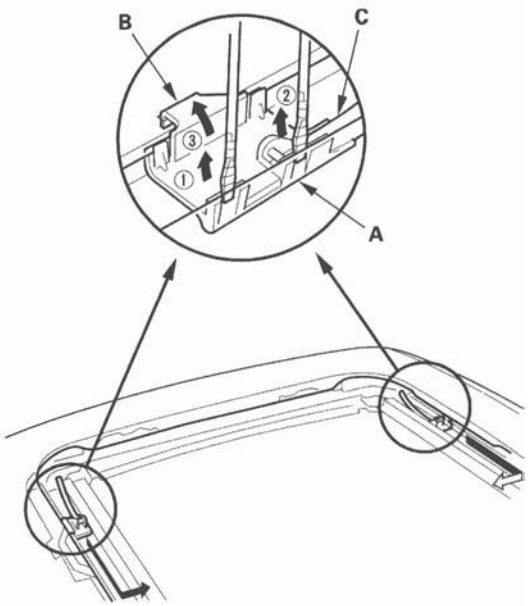

5. Install the deflector in the reverse order of removal.

Drain Channel Replacement

1. Remove the glass (see page 20-56).

2. Move both glass brackets (A) with the moonroof switch to the position where the moonroof normally tilts up, and disconnect the drain channel rods (B) on both sides.

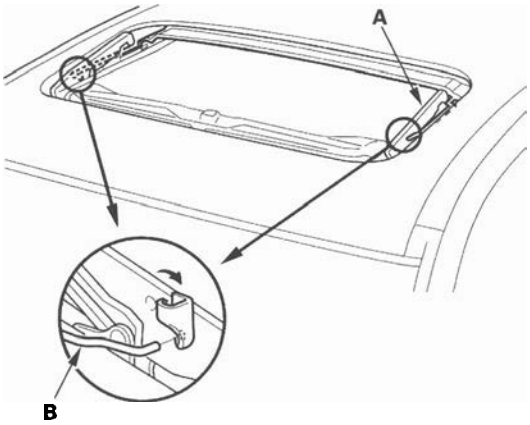

3. Slide the drain channel (A) forward.

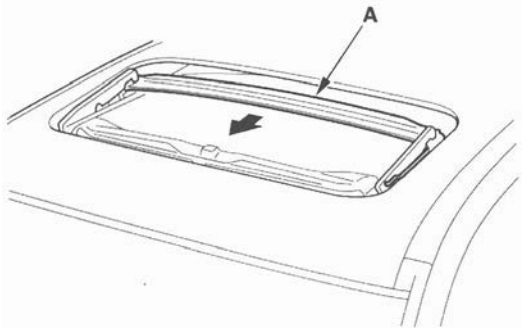

4. Pull the rear edge of the drain channel (A) up while pushing both clips (B), and release the channel from both hooks (C) of the drain channel slider by pulling it rearward.

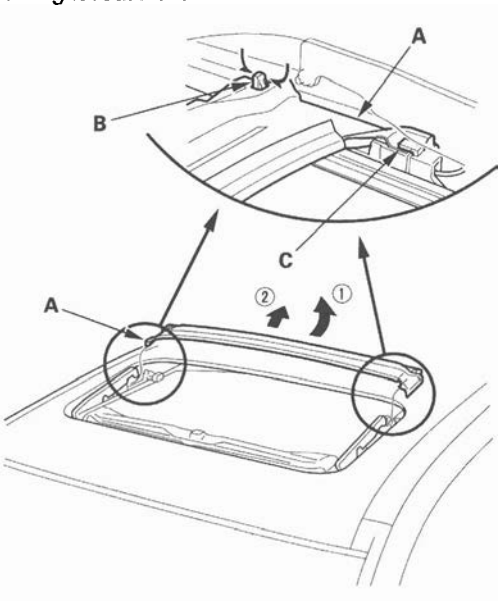

5. Remove the drain channel.

6. Install the channel in the reverse order of removal, and note these items:

   - Push the clip portions into place securely.
   - Check the glass position adjustment (see page 20-56).
   - If the moonroof glass was moved using the moonroof wrench, do the reset the moonroof control unit (see page 22-258).

7. Check for water leaks. Let the water run freely from a hose without a nozzle. Do not use a high-pressure spray.

Sunshade Replacement

1. Remove the drain channel (see page 20-58).
2. Slide the sunshade (A) until you can see both sunshade slider spacers (B).

Fastener Locations

▶ : Screw, 4

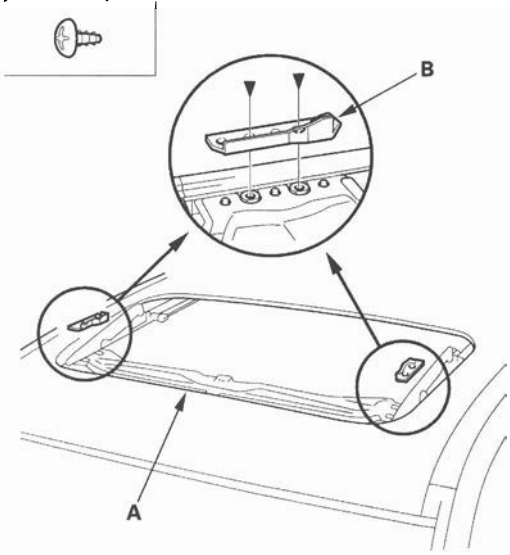

3. Remove the screws, then remove both spacers.
4. While lifting the front portion of the sunshade (A), move the sunshade forward until you can see both sunshade rear hooks (B). Do not damage the sunshade and hooks.

Fastener Locations

▶ : Screw, 4

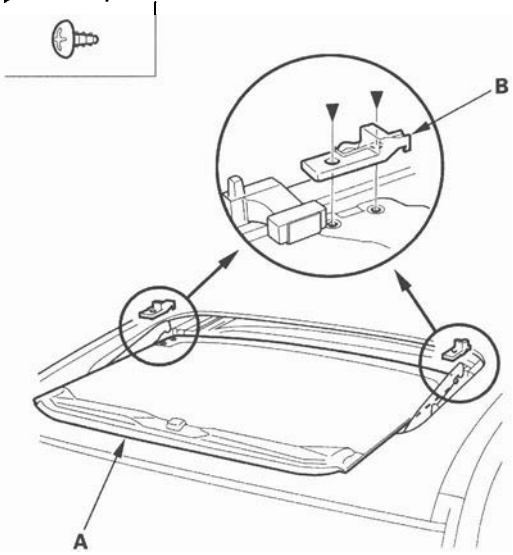

5. Remove the screws, then remove both hooks.

(cont'd)

Sunshade Replacement (cont'd)

6. Remove the sunshade (A).

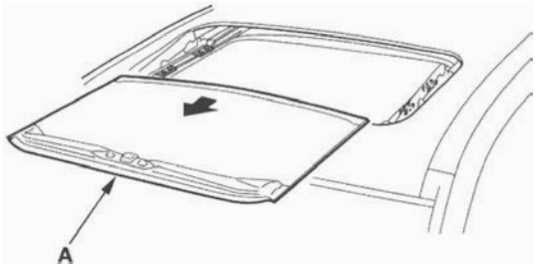

7. Remove both front sunshade base sliders (A) and both rear sunshade base sliders (B).

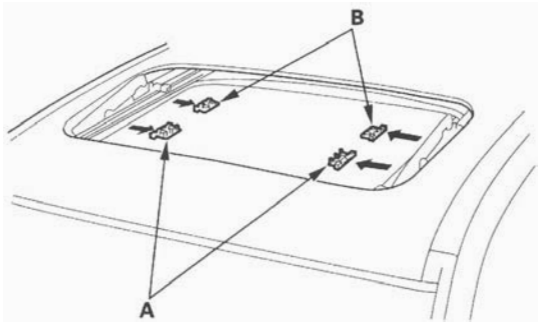

8. Install the sunshade in the reverse order of removal, and check the glass position adjustment (see page 20-56).

9. Check for water leaks. Let the water run freely from a hose without a nozzle. Do not use a high-pressure spray.

Motor Replacement

1. Remove the headliner (see page 20-83).

2. Put on gloves to protect your hands. Disconnect the connector (A), and remove the bolts, then remove the motor (B).

Fastener Locations

▶ : Bolt, 2

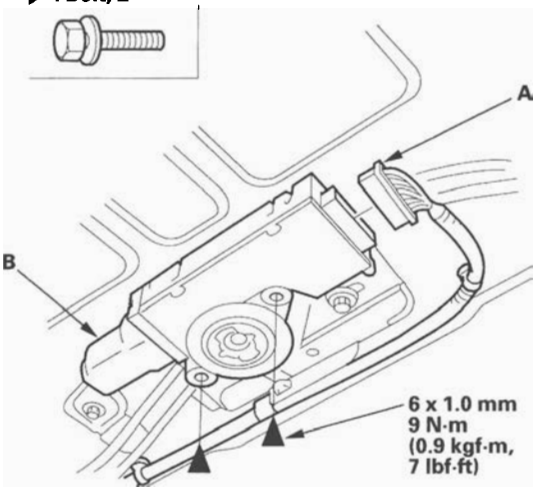

3. Install the motor in the reverse order of removal, and note these items:

- Make sure the connector is plugged in properly.
- Reset the moonroof control unit (see page 22-258).
- Check the motor operation.

Frame and Drain Tube Replacement

SRS components are located in this area. Review the SRS component locations (see page 24-13) and the precautions and procedures (see page 24-15) before doing repairs or service.

1. Remove these items:
   - Headliner (see page 20-83)
   - Moonroof glass (see page 20-56)

2. Put on gloves to protect your hands. Disconnect the motor connector (A).

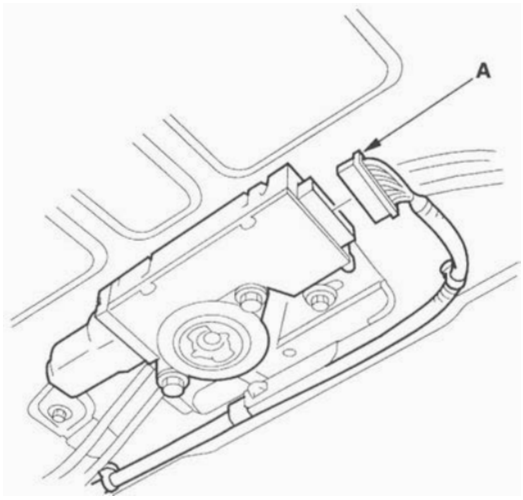

3. Disconnect the drain tubes (A).

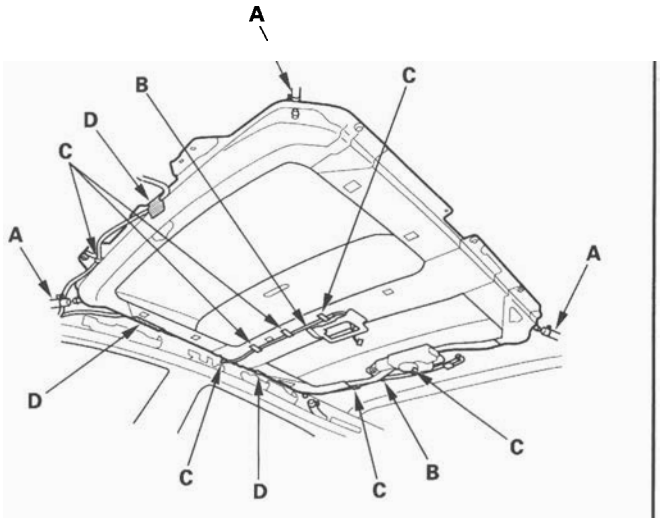

4. Remove the interior harness (B) by detaching the harness clips (C) and removing the cushion tapes (D).

5. With an assistant holding the frame (A), remove the bolts, starting at the rear, and release the rear hooks (B) by moving the frame forward.

Fastener Locations

▶ : Bolt, 9

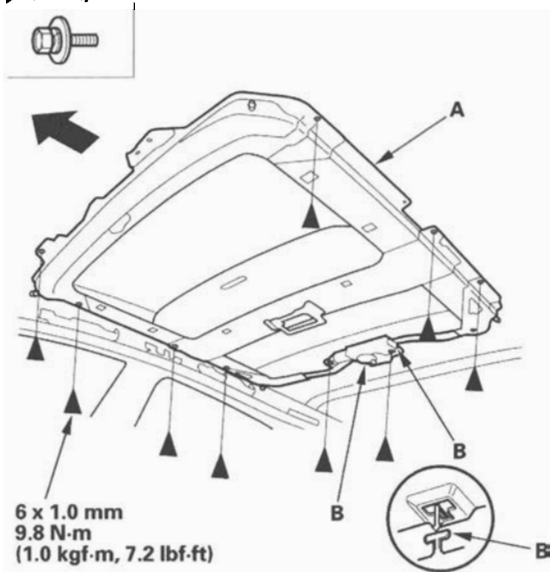

6. With the help of an assistant, carefully remove the frame through the front door opening. Take care not to scratch the interior trim and body, or tear the seat covers.

7. To remove a front drain valve (A) from the body, remove the kick panel, left or right (see page 20-67), and the driver's dashboard undercover (see page 20-100) then remove the front drain tube (B).

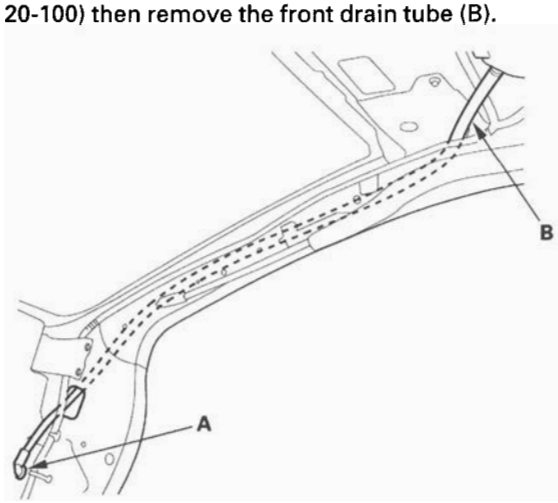

(cont'd)

Frame and Drain Tube Replacement (cont'd)

8. To remove a rear drain valve (A) from the cargo area, remove these parts:

   - Rear side trim panel (see page 20-75)
   - Quarter-pillar glass trim (see page 20-74)

   Using a clip remover, detach the clips (B), then remove the rear drain tube (C).

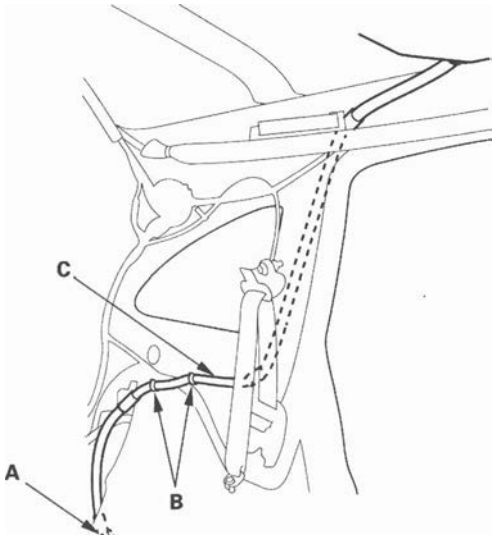

9. Install the frame and drain tube in the reverse order of removal, and note these items:

   - Before installing the frame, clear the drain tubes and drain valves using compressed air.
   - When installing, tie a string to the top end of the new drain tube and pull it up into the roof.
   - Check the frame seal.
   - Clean the surface of the frame.
   - When installing the frame, first attach the rear hooks into the body holes.
   - Make sure the connectors are plugged in properly.
   - When connecting the drain tube, slide it over the frame nozzle at least 10 mm (0.39 in.).
   - Install the tube clip (A) on the drain tube (B) as shown.

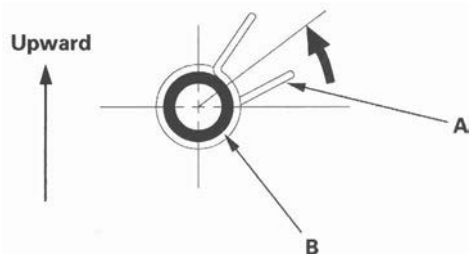

10. Check for water leaks. Let the water run freely from a hose without a nozzle. Do not use a high-pressure spray.

Drain Channel Slider and Cable Assembly Replacement

1. Remove the frame (see page 20-61).

2. Remove these parts from the frame:

   - Sunshade (see page 20-59)
   - Moonroof motor (see page 20-60)

3. Put on gloves to protect your hands. From both sides of the frame (A), remove the screws (B, C) securing the slide stops (D) and cable tube rear brackets (E), and remove the cable tube side bracket mounting bolts (F) and the cable tube mounting screws (G).

Fastener Locations

B ▶ : Screw, 2 C ▶ : Screw, 2 F ▶ : Bolt, 2



G ▶ : Bolt, 2

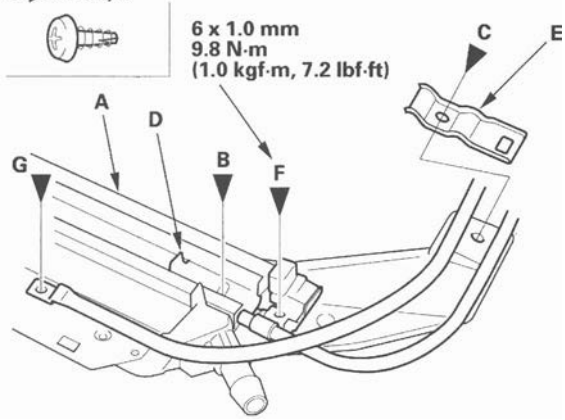

4. Turn both cable tube side brackets (A) up to release the hooks (B) from the holes in both sides of the frame.

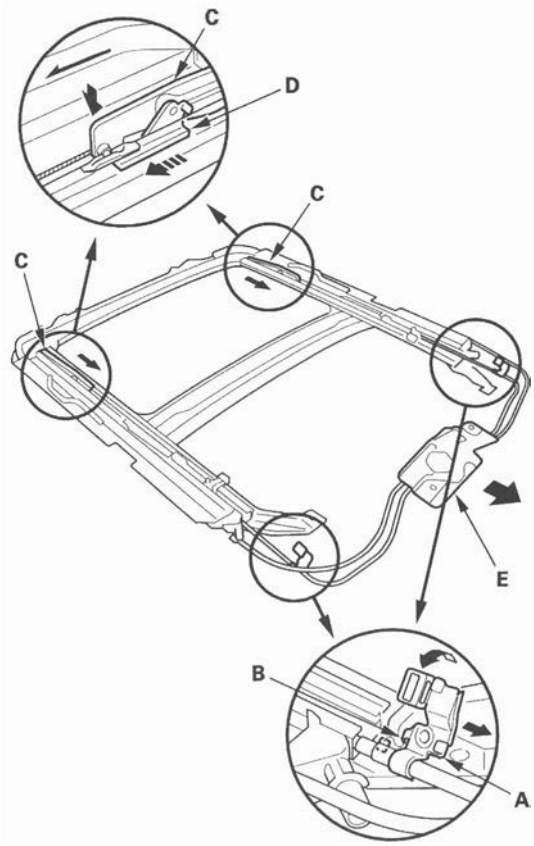

5. Pivot the glass brackets (C) down by sliding the link lifters (D) back, then slide both glass brackets back with the link lifters.

6. Slide the cable assembly (E) half-way.

(cont'd)

Drain Channel Slider and Cable Assembly Replacement (cont'd)

7. Remove the slide stops (A) and the drain channel sliders (B) from both sides.

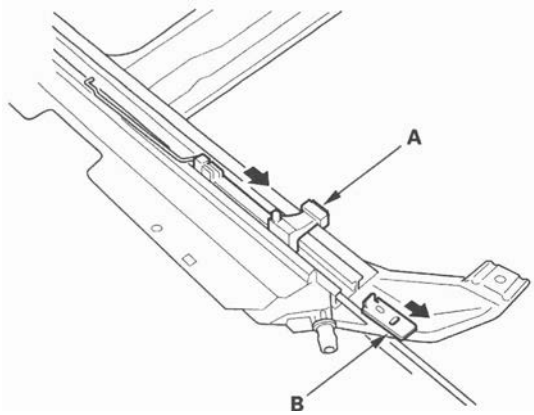

8. Slide the cable assembly (A) and both glass brackets (B) back, remove the deflector sliders (C) from both glass brackets, then remove them from the frame (D).

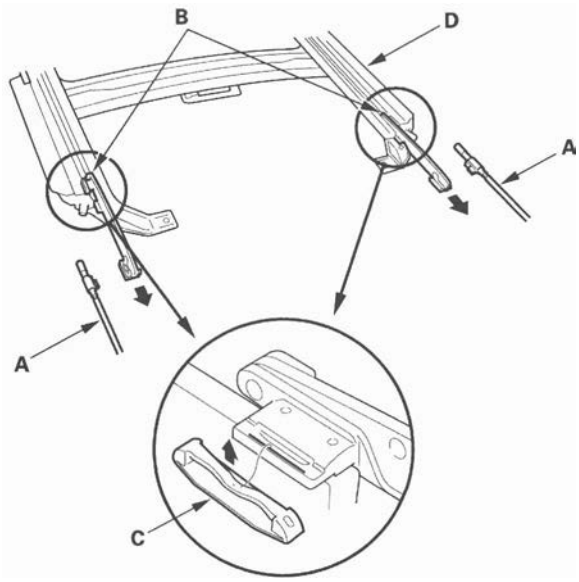

9. Install the slider and cable assembly in the reverse order of removal, and note these items:

- Damaged parts should be replaced.
- Apply multipurpose grease to the glass bracket (A) and guide rail portion of the frame (B) indicated by the arrows.
- Before reinstalling the motor, make sure both link lifters are parallel, and in the fully closed position.
- Before reinstalling the motor, install the frame and glass, then check the opening drag (see page 20-65).
- After reinstalling the motor, reset the moonroof control unit (see page 22-258).

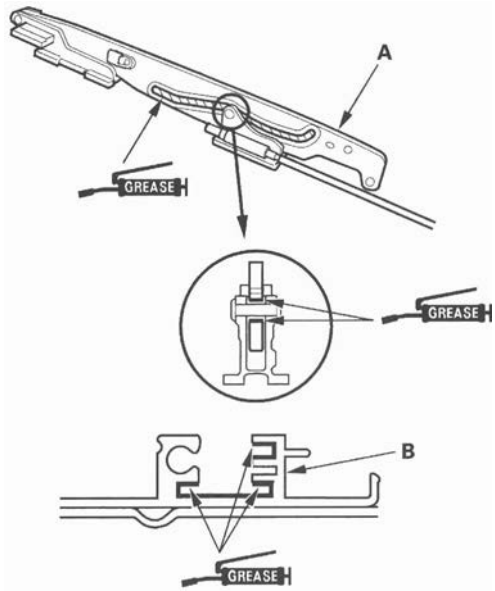

Closing Force and Opening Drag Check

1. Remove the headliner (see page 20-83).

2. Closing force check:

   - With a shop towel (A) on the leading edge of the glass (B), attach a spring scale (C) as shown.
   - Have an assistant hold the switch to close the glass while you measure the force required to stop it.
   - Read the force as soon as the glass stops moving, then immediately release the switch and spring scale.

   Closing force: 200—290 N (20—30 kgf, 44—66 lbf)

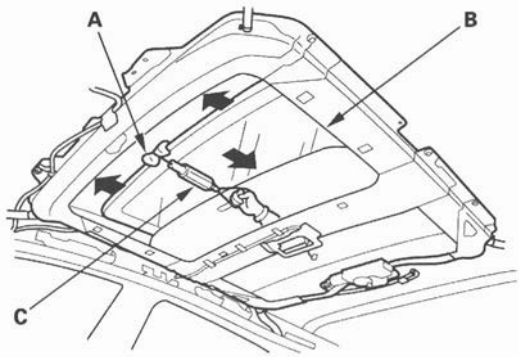

3. If the force in not within specification, remove the moonroof motor (see page 20-60), then check:

   - The gear portion and the inner cable for breakage and damage. If the gear portion is broken, replace the motor. If the inner cable is damaged, remove the frame (see page 20-61), and replace the cable (see page 20-63).
   - The moonroof motor (see page 22-260). If the motor fails to run or doesn't turn smoothly, replace it.
   - The opening drag. Go to step 4.

4. Opening drag check: Protect the leading edge of the glass with a shop towel (A). Measure the effort required to open the glass using a spring scale (B) as shown.

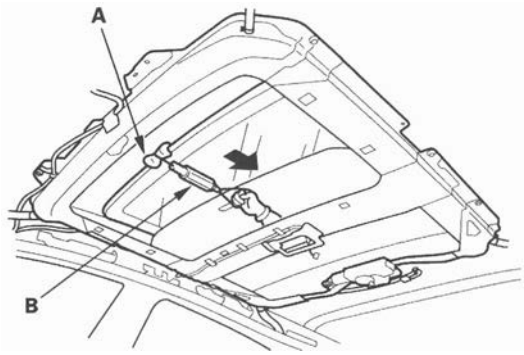

5. If the load is over 40 N (4 kgf, 9 lbf), check:

   - The side clearance and glass position adjustment (see page 20-56).
   - For broken or damaged sliding parts. If any sliding parts are damaged, replace them.
   - After reinstalling, reset the moonroof control unit (see page 22-258).

Component Location Index

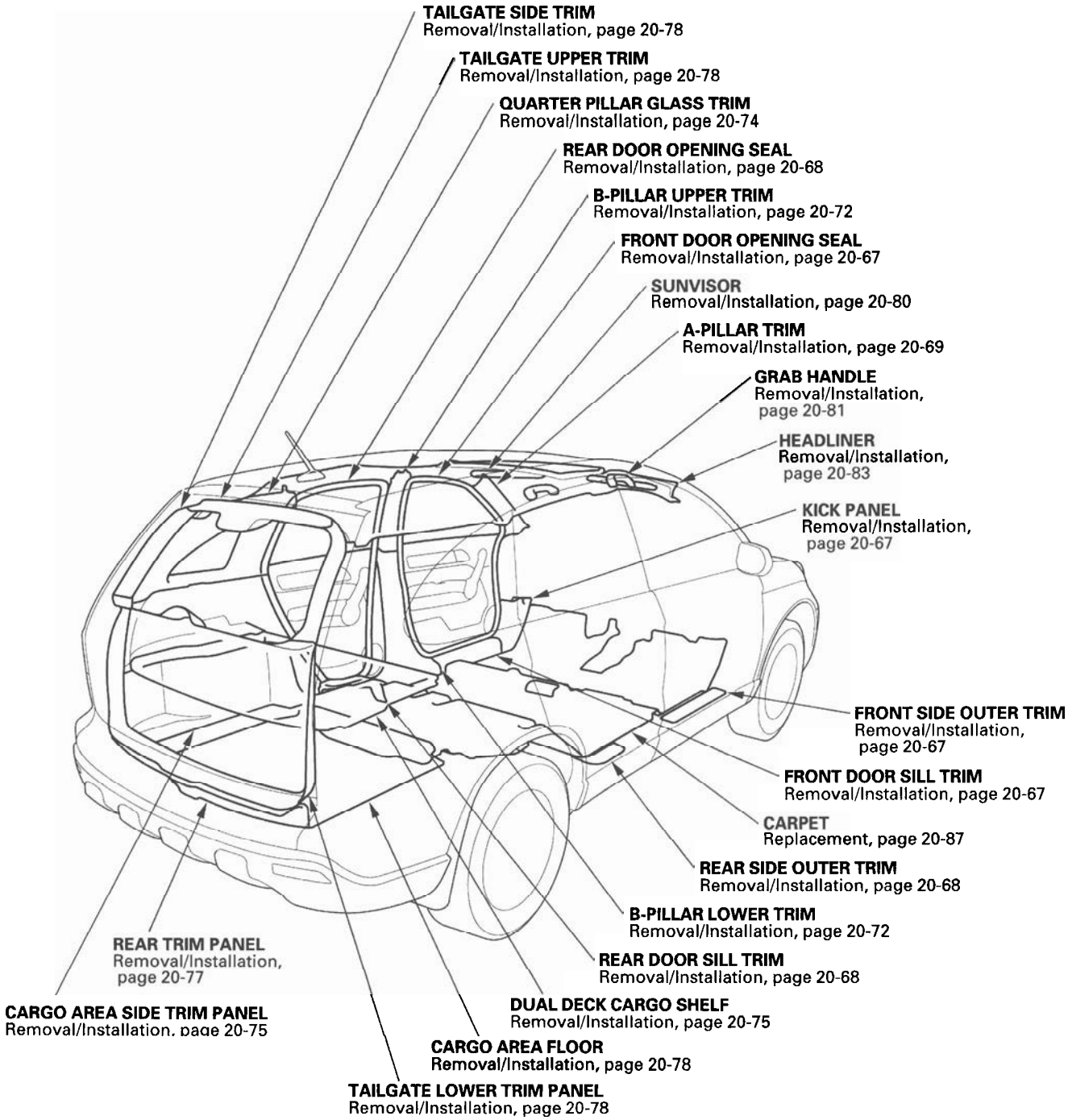

Trim Removal/Installation - Door Areas

Special Tools Required
KTC trim tool set SOJATP2014 *
* Available through the American Honda Tool and Equipment Program; call 888-424-6857

SRS components are located in this area. Review the SRS component locations (see page 24-13) and the precautions and procedures (see page 24-15) before doing repairs or service.

Front Door Sill Area

NOTE:
- Put on gloves to protect your hands.
- Use the appropriate tool from the KTC trim tool set to avoid damage when prying components.
- Take care not to bend or scratch the trim and panels.

1. Detach the hooks (A) and tabs (B) from the kick panel (C) and B-pillar lower trim (D), and pull the front door sill trim (E) up by hand to detach the clips (F).

Fastener Locations
F ▷ : Clip, 3 H ▷ : Clip, 4

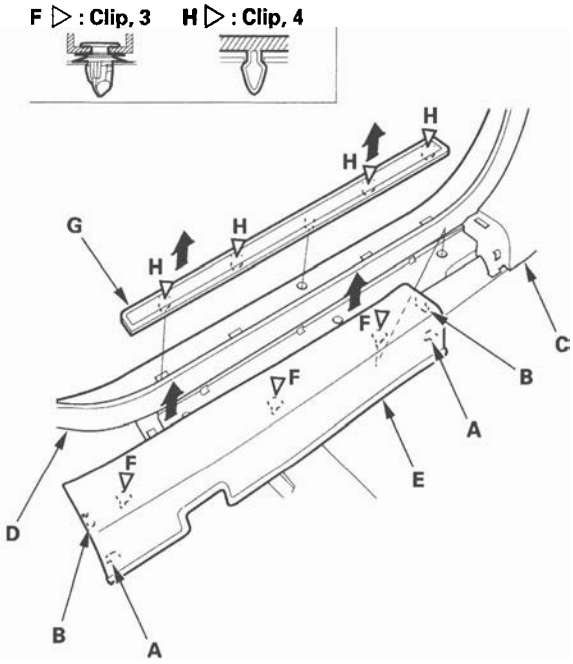

2. If necessary, pull the front side outer trim (G) up to detach the clips (H), then remove the trim.

3. Remove the driver's side kick panel (A) or the passenger's side kick panel (B).

-1 Pull out the door opening seal (C) as needed from the kick panel hooks (D) and the door opening flange.
-2 Pull the kick panel back by hand to detach the clips (E), then remove it.

Driver's side

Fastener Locations
▷ : Clip, 2

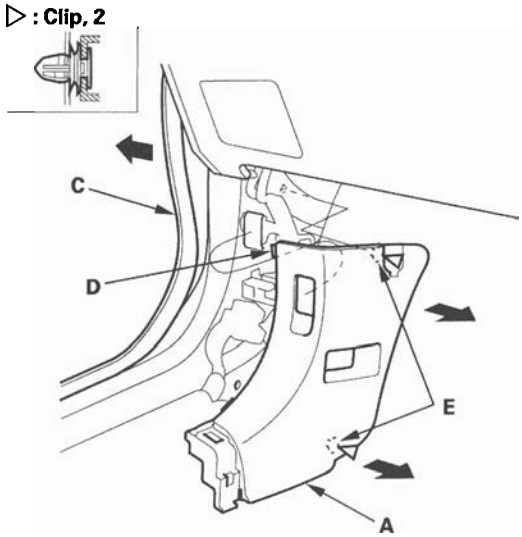

Passenger's side

Fastener Locations
▷ : Clip, 2

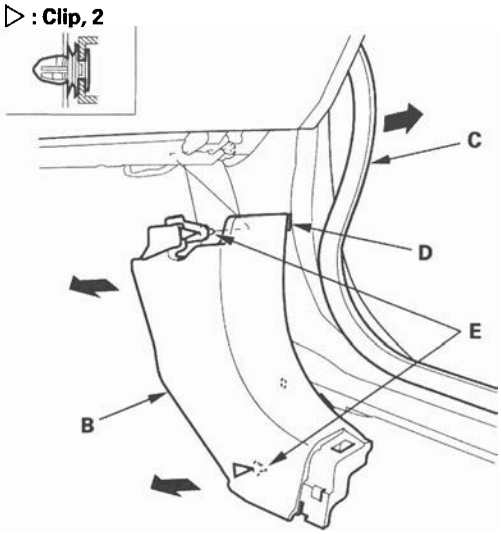

(cont'd)

Trim Removal/Installation - Door Areas (cont'd)

4. Pull out the front door opening seal (A) from the trim hooks (B) and around the front door opening flange, then remove the seal.

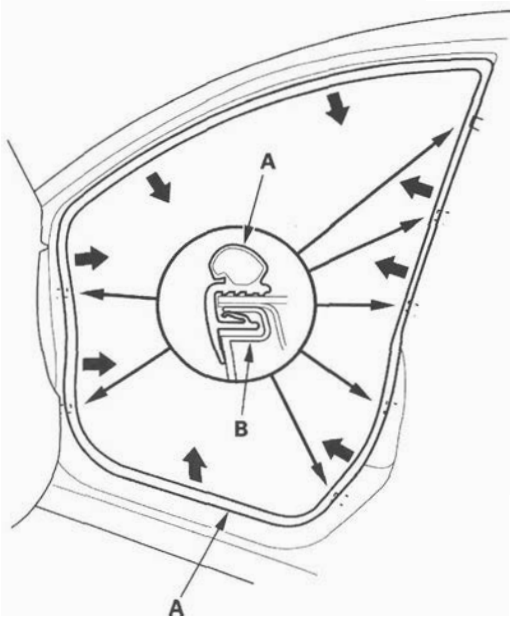

5. Install the trim in the reverse order of removal, and note these items:

   - Check if the clips are damaged or stress-whitened, and if necessary, replace them with new ones.
   - Push the clips and hooks into place securely.

Special Tools Required
KTC trim tool set SOJATP2014 *
* Available through the American Honda Tool and Equipment Program; call 888-424-6857

Rear Door Sill Area

NOTE:
- Put on gloves to protect your hands.
- Use the appropriate tool from the KTC trim tool set to avoid damage when prying components.
- Take care not to bend or scratch the trim and panels.

1. Fold up the rear seat.

2. Detach the hooks (A) from the cargo area side trim panel (B) and B-pillar lower trim (C), and pull the rear door sill trim (D) up by hand to detach the clips (E, F).

Fastener Locations
E ▷: Clip, 1 (White) F ▷: Clip, 2 (Green) H▷: Clip, 1 I ▷: Clip, 1

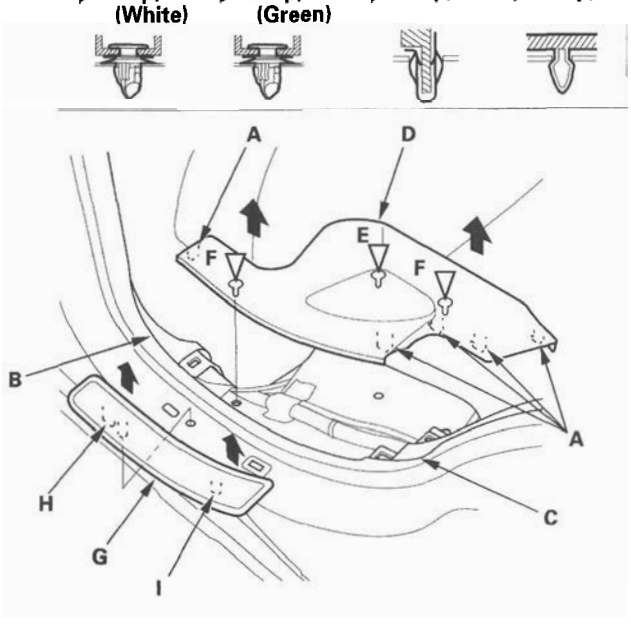

3. If necessary, pull the rear side outer trim (G) up to detach the clips (H, I), then remove the trim.

4. Pull out the rear door opening seal (A) from the trim hooks (B) and around the front door opening flange, then remove the seal.

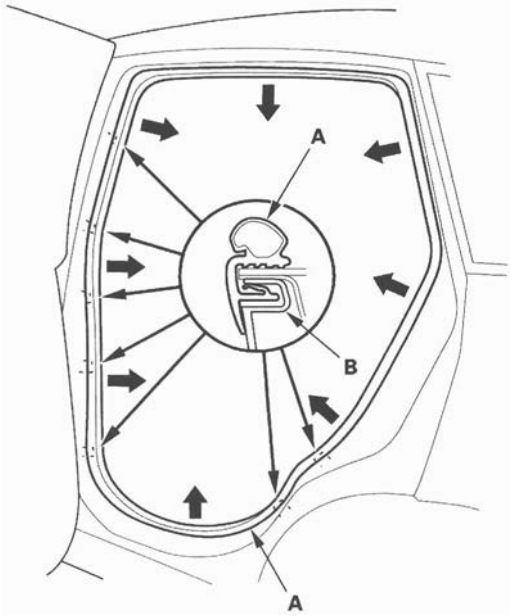

5. Install the trim in the reverse order of removal, and note these items:

   - Check if the clips are damaged or stress-whitened, and if necessary, replace them with new ones.
   - Push the clips and hooks into place securely.

Trim Removal/Installation - Pillar Areas

Special Tools Required

KTC trim tool set SOJATP2014 *

* Available through the American Honda Tool and Equipment Program; call 888-424-6857

A-pillar Trim

SRS components are located in this area. Review the SRS component locations (see page 24-13) and the precautions and procedures (see page 24-15) before doing repairs or service.

NOTE:

- Follow the A-pillar trim installation procedure carefully; improper installation could cause the side curtain airbags to deploy improperly and possibly cause injury.
- Put on gloves to protect your hands.
- Use the appropriate tool from the KTC trim tool set to avoid damage when prying components.
- Take care not to scratch the trim and panels.
- The upper clip in the A-pillar trim (A) consists of a resin grommet (B) and a metal pin (C). The groove (D) in the grommet secures it to the body panel (E). The shoulder (F) on the grommet is broken during removal, so the clip must be replaced with a new one when the trim is reinstalled.

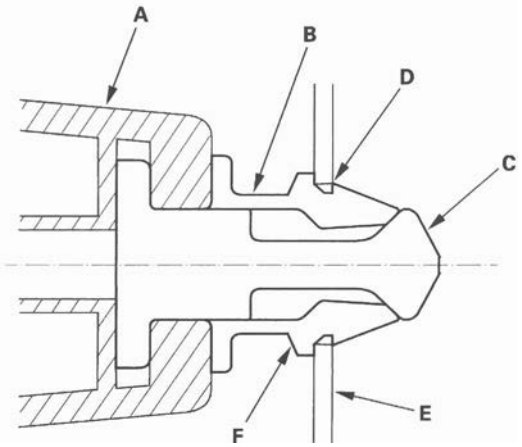

(cont'd)

Trim Removal/Installation - Pillar Areas (cont'd)

1. Pull the front door opening seal away from the A-pillar, as needed (see step 4 on page 20-68).

2. Hit the upper clip A-pillar trim (A) with a rubber mallet. The clip is under the "SIDE CURTAIN AIRBAG" mark (near the top of the A-pillar trim) (B). Hitting the clip breaks the shoulder (C) on the grommet (D) and pushes the pin (E) and grommet against the body (F).

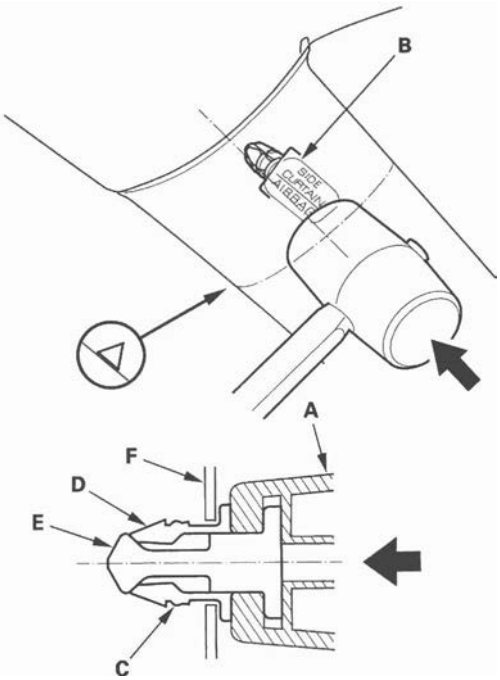

3. Pull the top of the A-pillar trim (A) back by hand to remove the pin (B) from the grommet (C) remaining in the body (D).

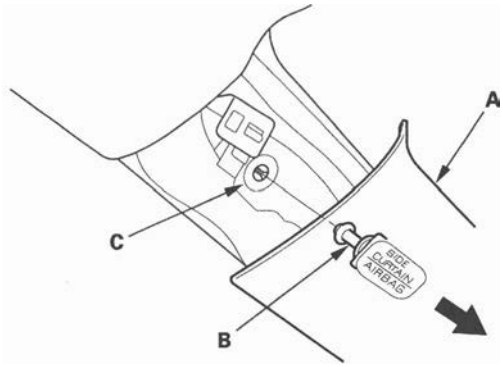

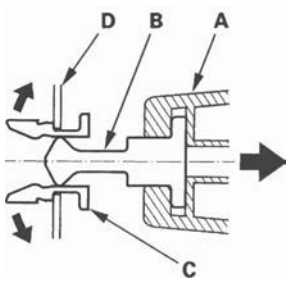

4. Remove the A-pillar trim (A) by hand to detach the remaining clips, then pull the trim up from the dashboard (B).

Fastener Locations

▷ : Clip, 2

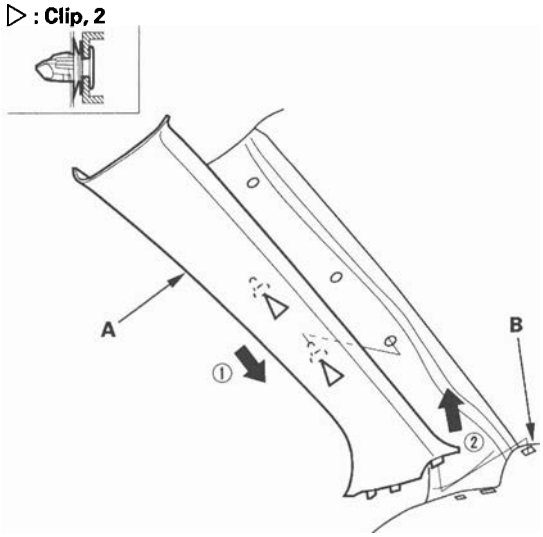

5. Remove the grommet from the body.

   NOTE: The upper clip must be replaced with a new one because the grommet is damaged during removal.

6. If the side curtain airbag has been deployed, replace the A-pillar trim with a new one.

7. If the side curtain airbag has not been deployed, check the A-pillar trim (A):

   - To prevent the side curtain airbags from deploying improperly and possibly causing injury, inspect the A-pillar trim and replace it if it has any of these types of damage:
     – Any cracks, deformation, or stress-whitening
     – Any cracks or stress-whitening in the clip and pin seating surfaces (B)
     – Damaged top of the upper clip pin (C)
   - Replace the upper clip with a new one because it was damaged during removal.
   - Check if the clips (D) are damaged or stress-whitened, and if necessary, replace them with new ones.

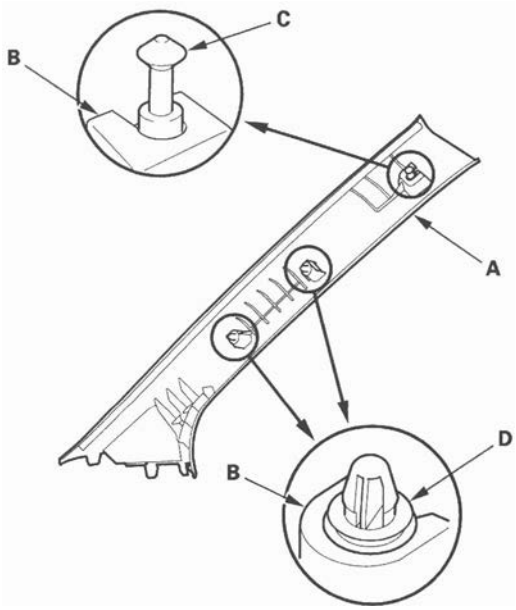

8. Before installing the A-pillar trim (A), carefully remove the grommet (B) from the pin (C) on the new upper clip.

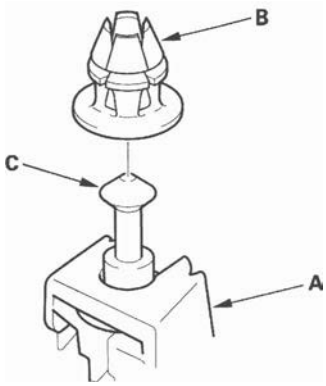

9. Check the overlap between the headliner and A-pillar trim, and if necessary, adjust it (see page 24-160).

10. Carefully reinstall the grommet (A) on the pin (B) and seat them on the A-pillar trim (C) as shown.

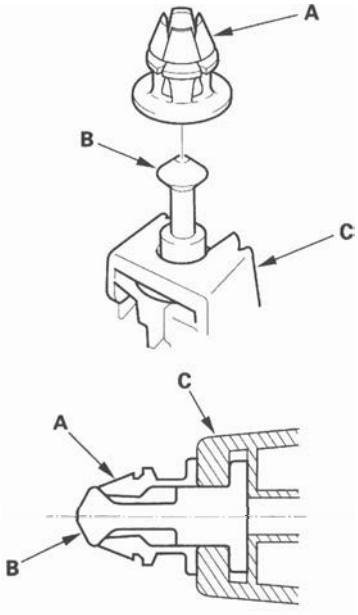

(cont'd)

Trim Removal/Installation - Pillar Areas (cont'd)

11. Reinstall the A-pillar trim (A).

    1 Insert the bottom of the trim into the dashboard (B).
    2 Place the trim over the A-pillar (C), and fit its upper clip (D) and the other clips (E) into holes (F) in the A-pillar, then lightly push the trim into place.

    NOTE:
    - Make sure the side curtain airbag isn't tucked down under the clips and ribs.
    - Push lightly on the upper clip. If you push too hard, the clip will be damaged, and it will not hold the trim properly.

Fastener Locations

E ▷: Clip, 2

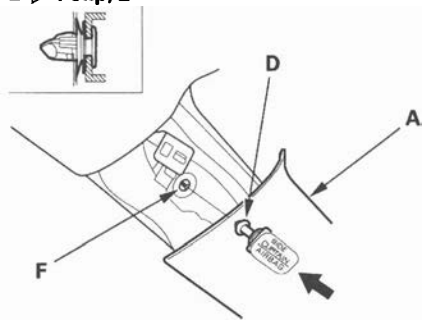

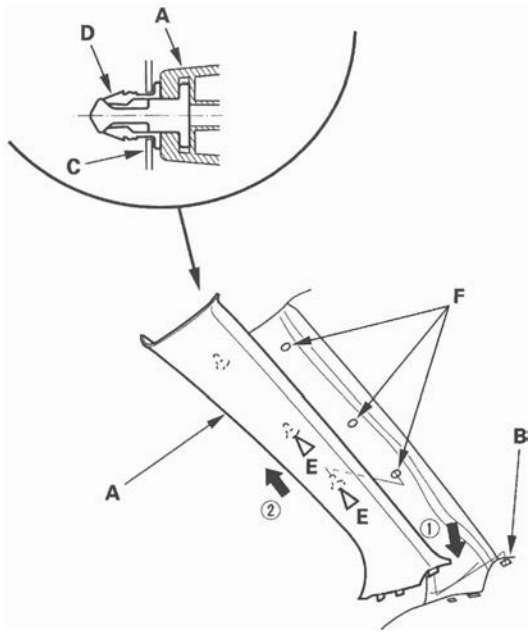

12. Reinstall the front door opening trim.

Special Tools Required

KTC trim tool set SOJATP2014 *

* Available through the American Honda Tool and Equipment Program; call 888-424-6857

B-pillar Upper/Lower Trim

SRS components are located in this area. Review the SRS component locations (see page 24-13) and the precautions and procedures (see page 24-15) before doing repairs or service.

NOTE:
- Put on gloves to protect your hands.
- Use the appropriate tool from the KTC trim tool set to avoid damage when prying components.
- Take care not to bent or scratch the trim and panels.

1. Remove these items:

    - Front door sill trim (see page 20-67)
    - Rear door sill trim (see page 20-68)
    - Front door opening seal, as needed (see step 4 on page 20-68)
    - Rear door opening seal, as needed (see step 4 on page 20-69)

2. Slide the front seat forward fully, and put the rear seat in the normal upright position.

3. Remove the B-pillar lower trim (A).

-1 Remove the rear seat strap anchor bolt (B).
-2 Pull the upper portion of the trim back to release the upper hooks (C).
-3 Detach the lower clips (D) by pulling the bottom of the trim back by hand.

Fastener Locations

B ▶ : Bolt, 1 D ▷ : Clip, 2



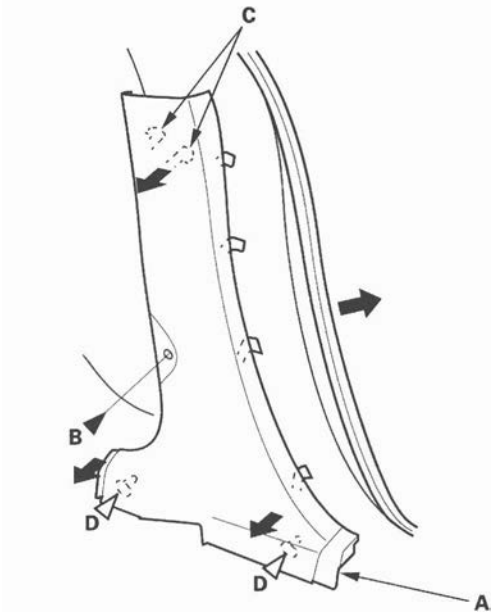

4. Remove the front seat belt upper anchor (see step 7 on page 24-4).

5. Pull the bottom of the B-pillar upper trim (A) back by hand to release the hooks (B).

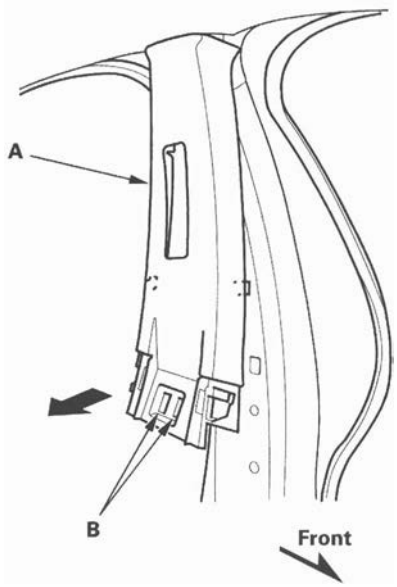

6. Release the upper pin (A) by pulling the top of the B-pillar upper trim (B). Pull the trim down to release the upper hooks (C) from the body holes (D).

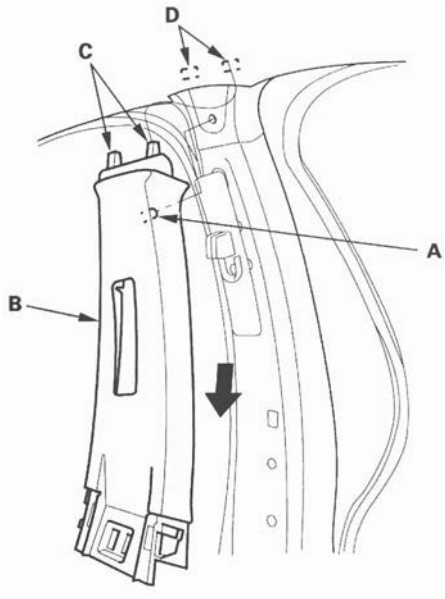

(cont'd)

Trim Removal/Installation - Pillar Areas (cont'd)

7. Install the trim in the reverse order of removal, and note these items:

   - Check if the clips (A) are damaged or stress-whited and if necessary, replace them with new ones.
   - If the side curtain airbag has deployed, replace the B-pillar upper and lower trim and all clips on the trim with new ones (see page 24-158).
   - To prevent the side curtain airbags from deploying improperly and possibly causing injury, inspect the trim and replace it if it has any of these types of damage:
     – Any cracks or deformation in the B-pillar upper trim (B) and the upper hooks (C), and any stress-whitened clips in the upper part of the trim
     – Any cracks or deformation in the B-pillar lower trim (D), and any breakage in the part (E) fitted with the B-pillar upper trim
     – Any cracks or stress-whitened clips in the seating surface (F)
   - Replace any damaged parts with new ones.
   - Make sure the top of the trim overlaps with the headliner correctly (see page 24-160).
   - Make sure the trim hook is installed into the side curtain airbag B-pillar bracket securely.
   - Push the clip and hooks into place securely.
   - Before installing the anchor bolt, make sure there are no twists or kinks in the seat belt.

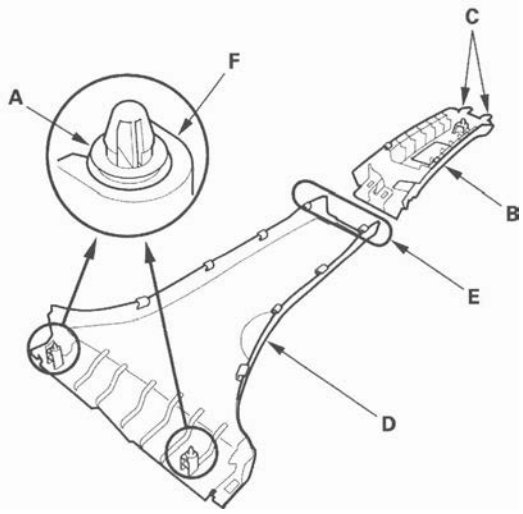

Special Tools Required
KTC trim tool set SOJATP2014 *
* Available through the American Honda Tool and Equipment Program; call 888-424-6857

Quarter Pillar Glass Trim

SRS components are located in this area. Review the SRS component locations (see page 24-13) and the precautions and procedures (see page 24-15) before doing repairs or service.

NOTE:
- Put on gloves to protect your hands.
- Use the appropriate tool from the KTC trim tool set to avoid damage when prying components.
- Take care not to bent or scratch the trim and panels.

1. Tip up the rear seat.

2. Remove these items:

   - Rear seat belt upper anchor (see step 4 on page 24-8)
   - Tailgate weatherstrip, as needed (see page 20-160)
   - Rear door opening seal, as needed (see step 4 on page 20-69)
   - Cargo area side trim panel, as needed (see page 20-75)

3. Remove the quarter pillar glass trim (A).

   1. Pull the bottom of the trim back by hand to detach the clips (B, C, D) and pin (E).
   2. Pull the trim down to release the upper hooks (F) from the body holes (G).

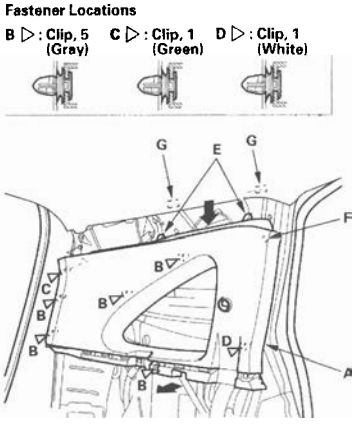

4. Install the trim in the reverse order of removal, and note these items:

   - Check if the clips (A) are damaged or stress-whitened, and if necessary, replace them with new ones.
   - If the side curtain airbag has deployed, replace the quarter pillar glass trim and all clips on the trim with new ones (see page 24-158).
   - To prevent the side curtain airbags from deploying improperly and possibly causing injury, inspect the trim and replace it if it has any of these types of damage:
     – Any cracks or deformation in the quarter pillar glass trim (B) and the upper hooks (C), and any stress-whitened areas in the upper part of the trim
     – Any cracks or stress-whitened areas in the clips seating surface (D)
   - Replace any damaged parts with new ones.
   - Make sure the top of the trim overlaps with the headliner correctly (see page 24-160).
   - Make sure the trim hook is installed into the body holes.
   - Push the clips and hooks into place securely.
   - Before installing the seat belt anchor bolt, make sure there are no twists or kinks in the seat belt.

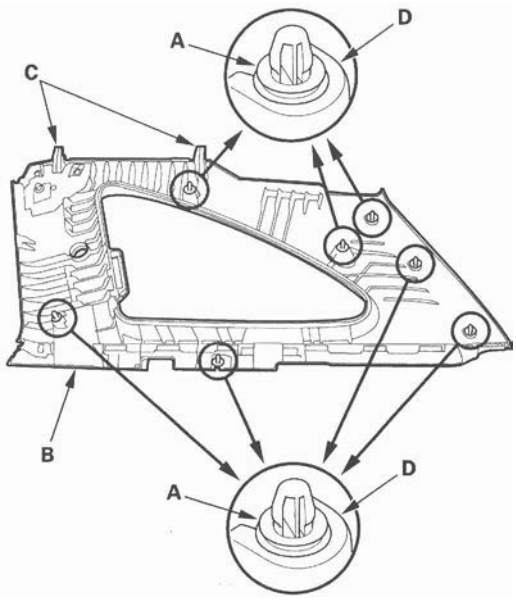

Trim Removal/Installation - Rear Side Area

Special Tools Required
KTC trim tool set SOJATP2014 *
* Available through the American Honda Tool and Equipment Program; call 888-424-6857

SRS components are located in this area. Review the SRS component locations (see page 24-13) and the precautions and procedures (see page 24-15) before doing repairs or service.

NOTE:
- Put on gloves to protect your hands.
- Use the appropriate tool from the KTC trim tool set to avoid damage when prying components.
- Take care not to bend or scratch the trim and panels.

1. Remove these items:

   - Tailgate weatherstrip, as needed (see page 20-160)
   - Rear door opening seal, as needed (see step 4 on page 20-69)
   - Rear door side sill (see page 20-68)
   - Rear trim panel (see page 20-77)
   - Cargo area floor (see page 20-78)

2. Remove the dual deck cargo shelf (A).

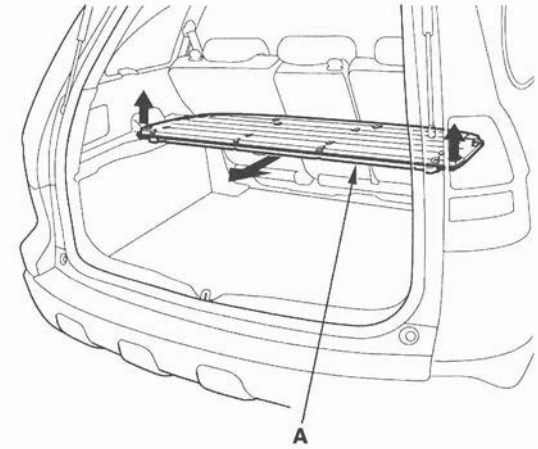

(cont'd)

Trim Removal/Installation - Rear Side Area (cont'd)

3. Using the appropriate trim tool, pry out on the upper portion of the lid (A) to release the hooks (B), then remove it. From the opening hole of the lid, remove the bolt.

Fastener Location

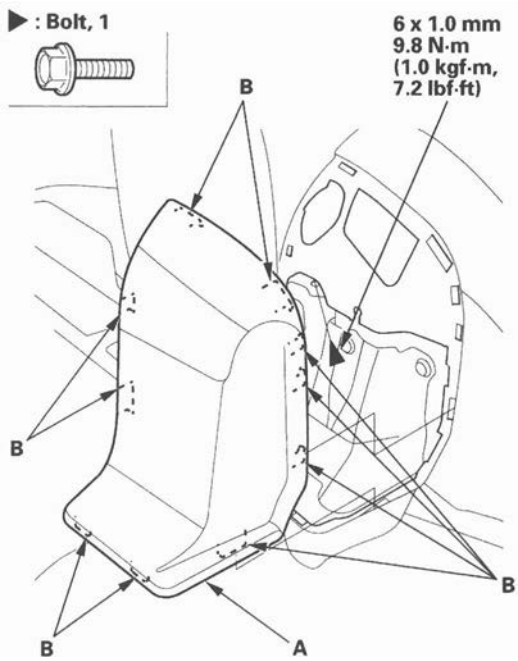

4. Remove the cargo area side trim panel (A).

-1 Remove the clips (B, C) from the lower portion of the trim panel.
-2 Pull the upper edge of the trim panel back to release the upper hooks (D) from the quarter pillar glass trim (E).
-3 Pull out the trim panel back by hand to detach the clips (F) to remove it.
-4 Driver's side: Disconnect the cargo area accessory power socket connector (G).

Fastener Locations

B ▷ : Clip, 1 C ▷ : Clip, 1 F ▷ : Clip, 7

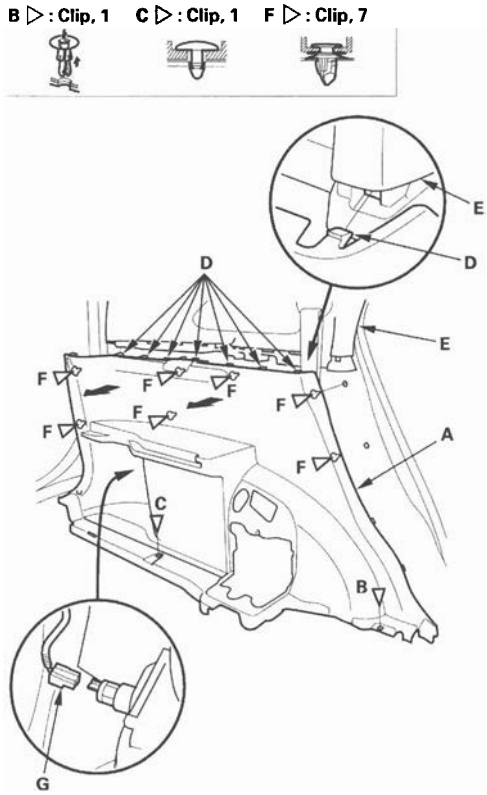

5. Install the panel in the reverse order of removal, and note these items:

- Check if the clips are damaged or stress-whitened, and if necessary, replace them with new ones.
- Make sure the cargo area accessory power socket connector is plugged in properly.
- When installing the panel, make sure there are no pinches in the seat belt.
- Push the clips into place securely.
- Before installing the seat belt anchor bolt, make sure there are no twists or kinks in the seat belt.

Trim Removal/Installation - Cargo Area

Special Tools Required
KTC trim tool set SOJATP2014 *
* Available through the American Honda Tool and Equipment Program; call 888-424-6857

NOTE:
- Put on gloves to protect your hands.
- Use the appropriate tool from the KTC trim tool set to avoid damage when prying components.
- Take care not to bend or scratch the trim and panels.

Rear Trim Panel

1. Remove the cargo area floor (see page 20-78).

2. Remove the tailgate weatherstrip, as needed (see page 20-160).

3. Remove the cargo hook (A) (two places).

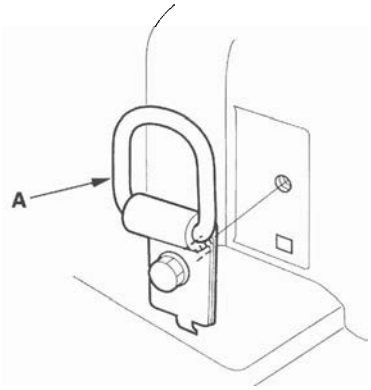

4. Detach the clips (A, B, C) by pulling the rear trim panel (D).

Fastener Locations
A ▷ : Clip, 2 B ▷ : Clip, 2 (Green) C ▷ : Clip, 2 (Gray)



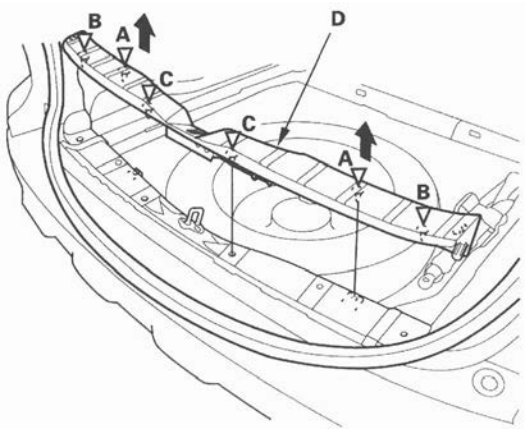

5. Install the trim in the reverse order of removal, and note these items:

   - Check if the clips are damaged or stress-whitened, and if necessary, replace them with new ones.
   - Push the clips into place securely.

(cont'd)

Trim Removal/Installation - Cargo Area (cont'd)

Cargo Area Floor

1. Remove the cargo area floor (A).

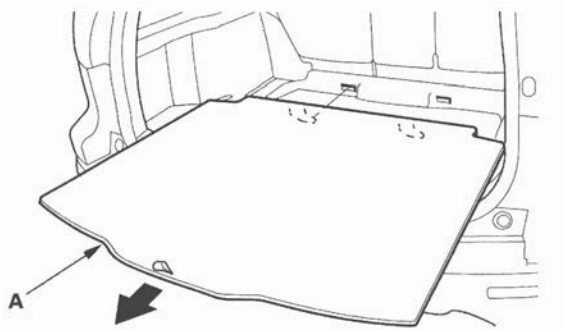

2. Install the lid in the reverse order of removal.

Trim Removal/Installation - Tailgate Area

Special Tools Required

KTC trim tool set SOJATP2014 *

* Available through the American Honda Tool and Equipment Program; call 888-424-6857

NOTE:

- Put on gloves to protect your hands.
- Use the appropriate tool from the KTC trim tool set to avoid damage when prying components.
- Take care not to bend or scratch the trim and panels.

1. Remove the tailgate upper trim panel (A).
   1. Disengage the hook (B) and tabs (C) from the left tailgate side trim (D) and right tailgate side trim (E).
   2. Pull the tailgate upper trim panel by hand to detach the clips (F, G, H), then remove it.

Fastener Locations

F ▷ : Clip, 2 G ▷ : Clip, 2 H ▷ : Clip, 2



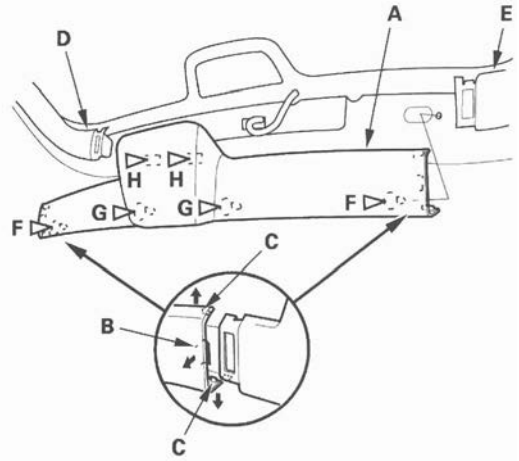

2. Remove the right tailgate side trim (A) and left tailgate side trim (B).

   -1 Disengage the hook (C) and tabs (D) from tailgate lower trim panel (E).
   -2 Pull the trim by hand to detach the clips, then remove them.

Fastener Locations

▷ : **Clip, 4**

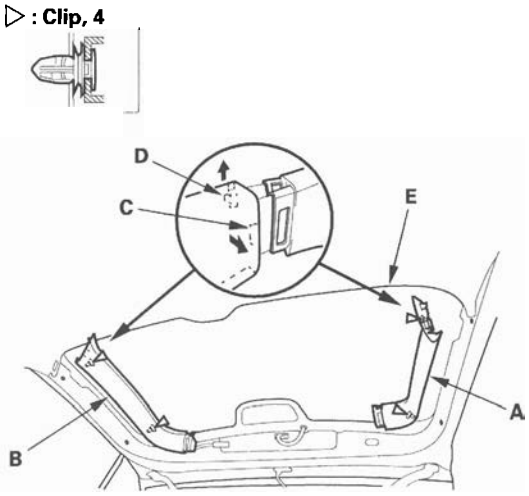

3. Remove the tailgate lower grip (A).

   -1 Using a trim tool to release the hooks (B) and tabs (C), pull and remove the tailgate lower grip caps (D) from the lower grip.
   -2 Remove the screws, and remove the tailgate lower grip from the tailgate lower trim panel (E).

Fastener Locations

▶ : **Screw, 2**

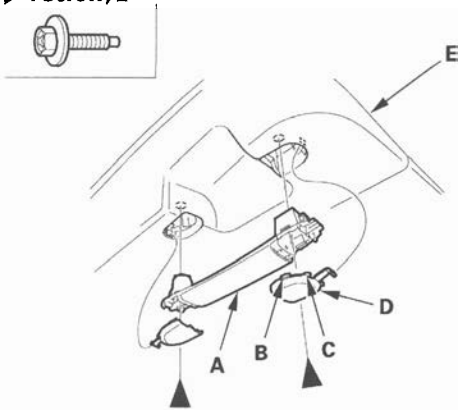

4. Pull the tailgate lower trim panel (A) back by hand, and detach the clips, then remove it.

Fastener Locations

▷ : **Clip, 12**

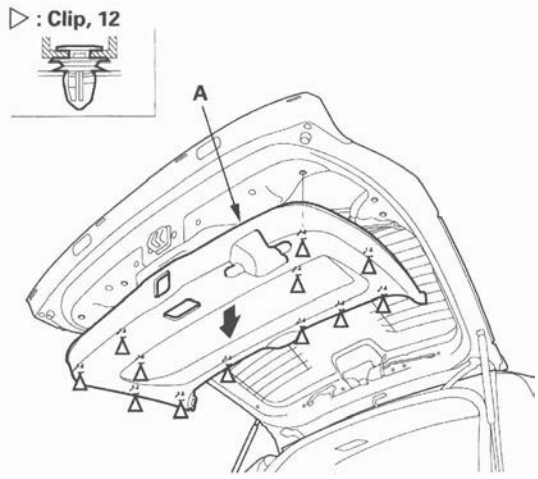

5. Install the trim in the reverse order of removal, and note these items:

   - Check if the clips are damaged or stress-whitened, and if necessary, replace them with new ones.
   - Push the clips into place securely.

Sunvisor Removal/Installation

Special Tools Required
KTC trim tool set SOJATP2014 *
* Available through the American Honda Tool and Equipment Program; call 888-424-6857

NOTE:
- Put on gloves to protect your hands.
- Use the appropriate tool from the KTC trim tool set to avoid damage when prying components.
- Take care not to scratch the headliner.

1. From both sides, using a trim tool, release the tabs (A) from the bracket (B).

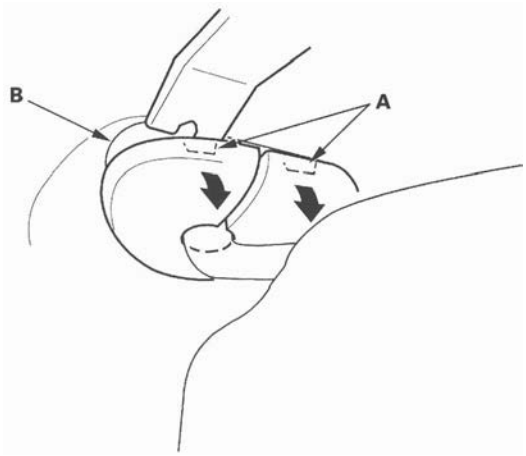

2. Remove the sunvisor cap (A) from the bracket (B). Turn the cap, and remove it.

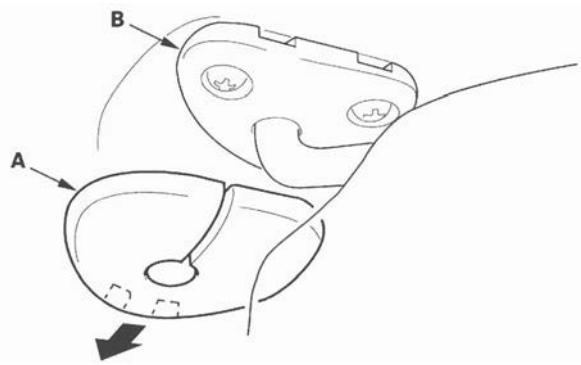

3. Remove the sunvisor (A).
   1. Using a T25 TORX bit, remove the screws.
   2. Remove the sunvisor from the body and holder (B).

Fastener Locations
▶ : Screw, 2

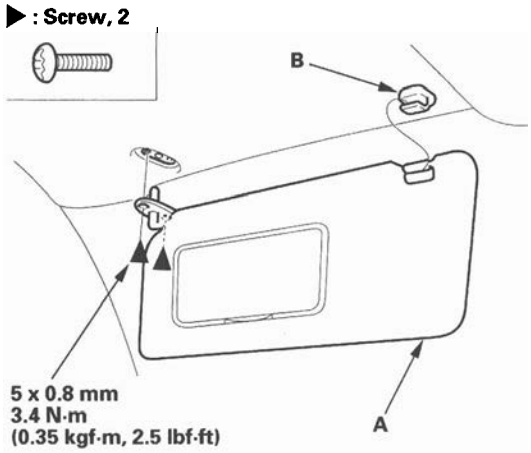

4. Using a flat-tip screwdriver, push the hook (A), and turn the holder (B) 90 °, then pull it out.

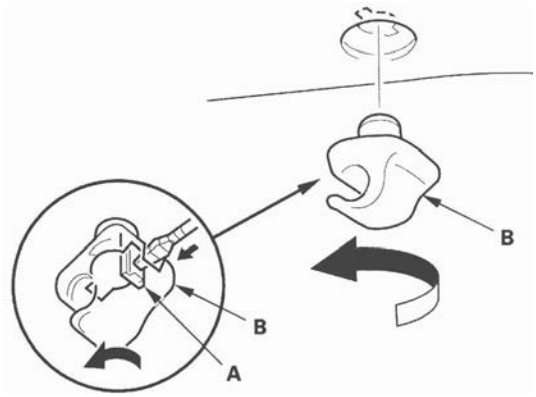

5. Install the sunvisor in the reverse order of removal, and note these items:

   - If the side curtain airbag has deployed, replace the sunvisor with a new one.
   - To prevent the side curtain airbags from deploying improperly and possibly causing injury, inspect removed pieces and replace them if they have any of these types of damage:
     - Any cracks in the sunvisor stay base (A)
     - Any bends or cracks in the sunvisor stay shaft (B)
     - Any cracks in the sunvisor base (C)
     - Any cracks or breakage in the vanity mirror base (D)

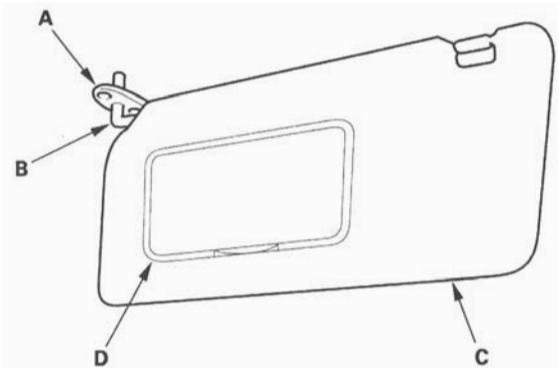

Grab Handle Removal/Installation

Special Tools Required
KTC trim tool set SOJATP2014 *
* Available through the American Honda Tool and Equipment Program; call 888-424-6857

NOTE: Use the appropriate tool from the KTC trim tool set to avoid damage when prying components.

1. Lower the grab handle (A), then pull out the covers (B).

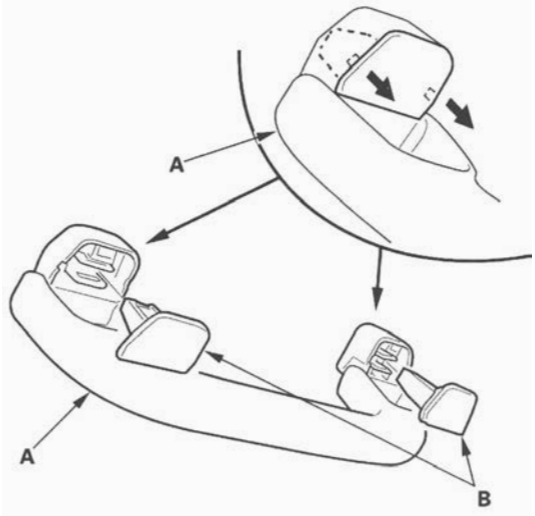

2. While pinching the clips (A), release the hooks (B), then remove the grab handle (C).

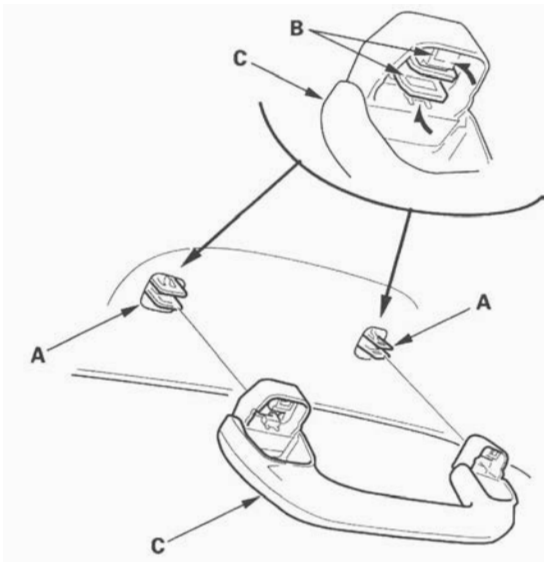

(cont'd)

Grab Handle Removal/Installation (cont'd)

3. Using a pair of pliers, remove all of the clips (A) by pinching its hooks.

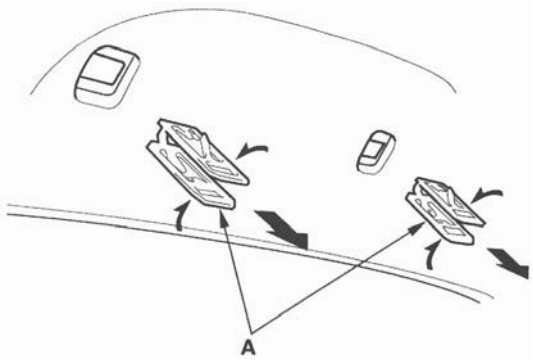

4. If the side curtain airbag has deployed, replace the grab handle with a new one.

5. If the side curtain airbag has not deployed, to prevent the side curtain airbags from deploying improperly and possibly causing injury, inspect removed pieces and replace them if they have any of these types of damage:

   - Any cracks or breakage in the grab handle (A).
   - Any cracked or stress-whitening in the covers (B).

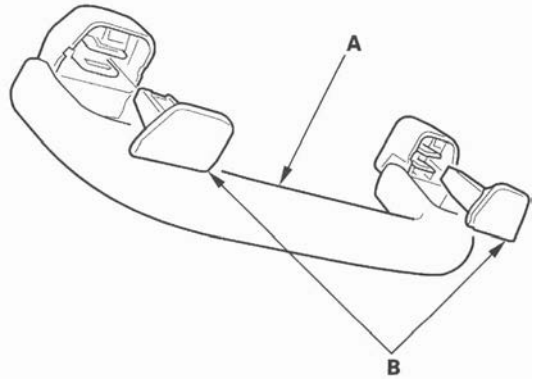

6. Install the clips (A) to the grab handle (B), then install the covers (C) fully into the clips.

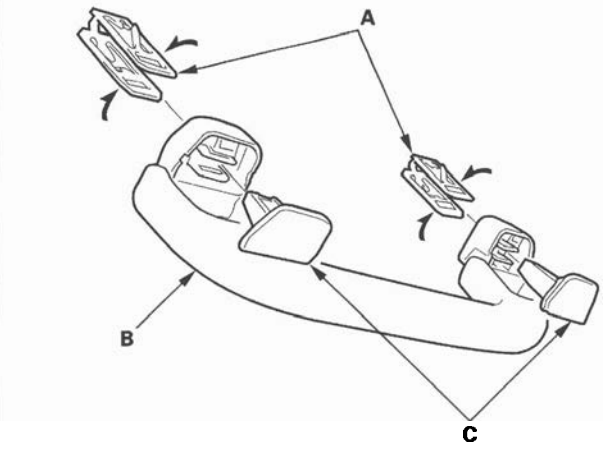

7. Position the grab handle (A) on the bracket (B), and push on the grab handle until the clips (C) snap into place securely.

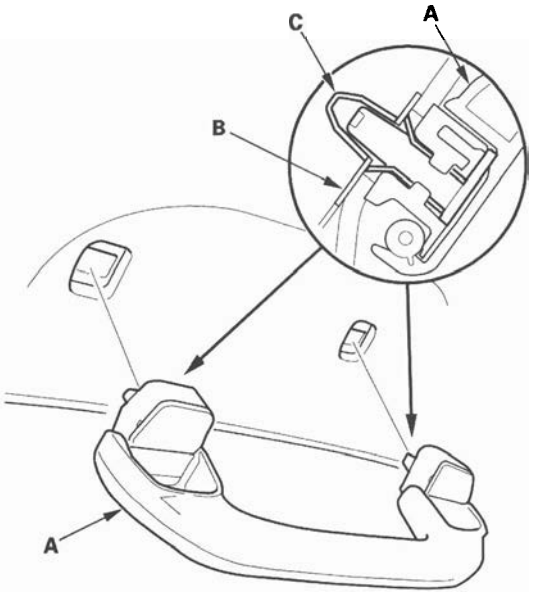

Headliner Removal/Installation

SRS components are located in this area. Review the SRS component locations (see page 24-13) and the precautions and procedures (see page 24-15) before doing repairs or service.

NOTE:
- Put on gloves to protect your hands.
- Use the appropriate tool from the KTC trim tool set to avoid damage when prying components.
- Take care not to bend or scratch the trim and panels.

1. Make sure you have the anti-theft codes for the audio and the navigation system, then write down the XM audio presets (if equipped).

2. Disconnect the negative cable from the battery, and a wait at least 3 minutes before beginning work.

3. Remove these items:

   - A-pillar trim, both sides (see page 20-69)
   - B-pillar upper trim, both sides (see page 20-72)
   - Quarter pillar glass trim, both sides (see page 20-74)
   - Ceiling light (see page 22-178)
   - Sunvisors, both sides (see page 20-80)
   - Grab handles, four places (see page 20-81)

4. Remove the roof console (A).

   1 Remove the lenses (B), and remove the bolts (C).
   2 Open the console, and remove the bolts (D).
   3 Lower the roof console, and disconnect the map light connector (E). If equipped, disconnect the moonroof switch connector (F) and navigation microphone connector (G).

Fastener Locations

C ▶ : Bolt, 2 **D ▶ : Bolt, 2 (Black)**

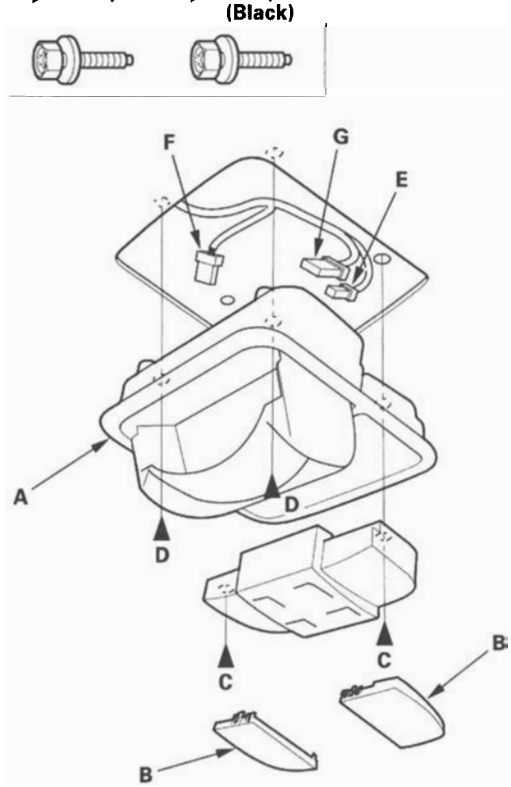

(cont'd)

Headliner Removal/Installation (cont'd)

5. Remove the cap (A) from the center seat belt retractor cover (B).

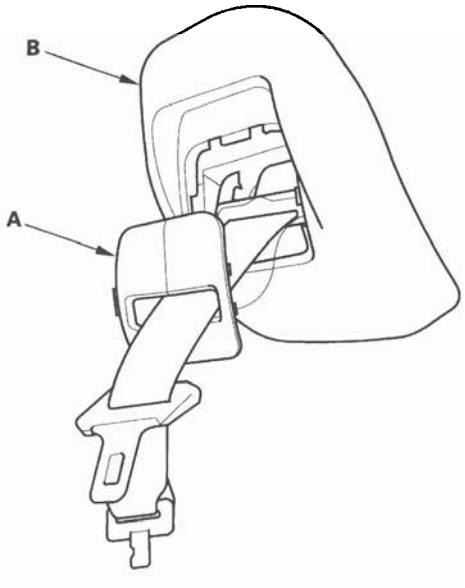

6. Lower the headliner (A).

-1 Remove the front door opening seals (B), rear door opening seals (C), and tailgate weatherstrip (D) from each roof portion.
-2 Release the clips (E) and Velcro fasteners (F) from the headliner by pulling down. Take care not to damage the headliner.
-3 Lower the headliner carefully.

Without moonroof

Fastener Locations

E ▷ : Clip, 2 F ▷ : Fastener, 2

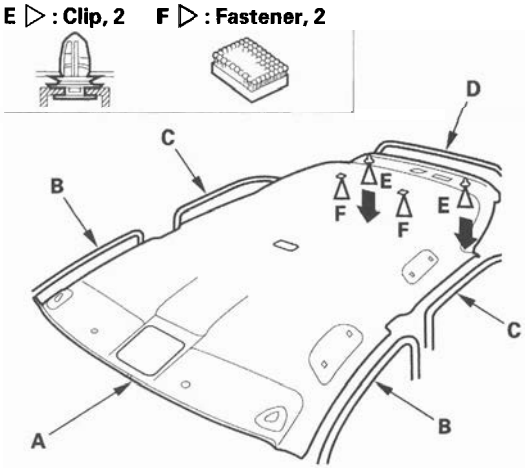

With moonroof

Fastener Locations

E ▷ : Clip, 5 F ▷ : Fastener, 8

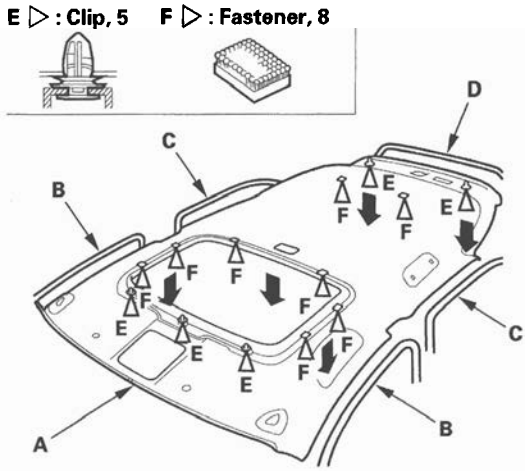

7. Remove the cushion tapes, then remove the interior wire harness (A) and antenna lead (AM/FM) (B) from the headliner.

Without moonroof

Fastener Locations

▷ : Cushion tape, 20

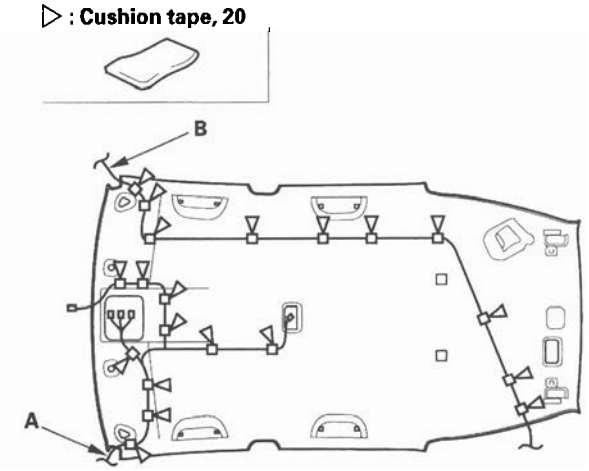

With moonroof

Fastener Locations

▷ : Cushion tape, 9

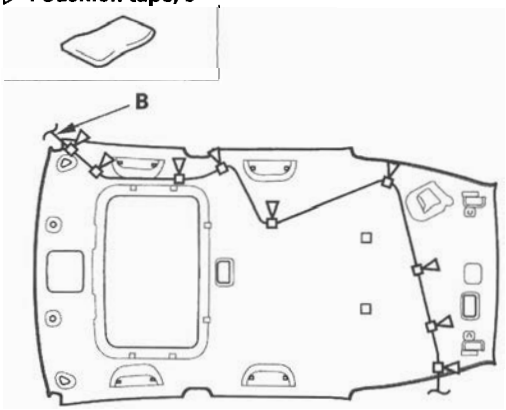

8. With the help of an assistant, pull the headliner (A) out through the tailgate opening. Do not bend the liner. Bending the liner will crease and damage it.

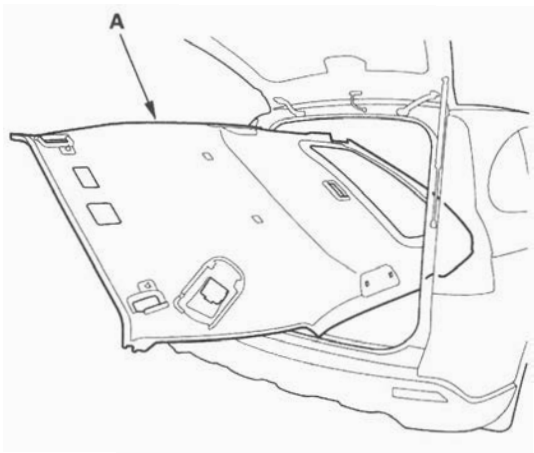

9. Remove the screws, and remove the retractor cover bracket (A) and retractor cover (B) from the headliner.

Fastener Locations

▶ : Screw, 6

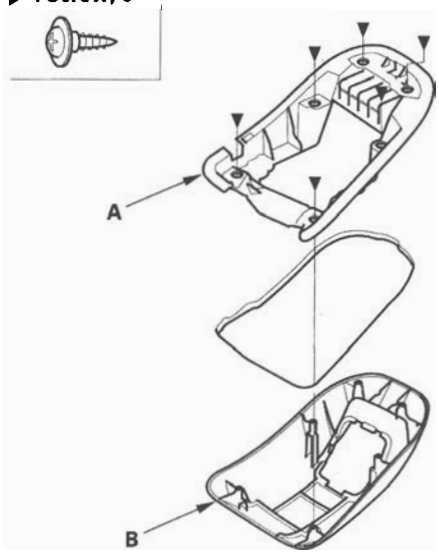

10. If necessary, remove the side curtain airbag mounting bolt (A) and grab handle bracket mounting bolts (B), then remove the grab handle bracket (C) from each side clips (D) by pulling the bracket. Check if clips (Japan-produced model) are damaged or stress-whitened, and if necessary, replace them with new ones.

Fastener Locations

A, B ▶ : Bolt, 3 D ▶ : Bolt, 6



5 x 0.8 mm
5 N·m
(0.5 kgf·m, 4 lbf·ft)

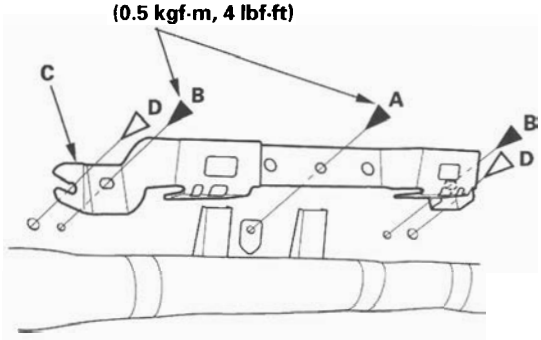

(cont'd)

Headliner Removal/Installation (cont'd)

11. Install the headliner in the reverse order of removal, and note these items:

- If the side curtain airbag has deployed, replace the headliner and removed trim pieces with new ones (see page 24-158).
- To prevent the side curtain airbags from deploying improperly and possibly causing injury, inspect removed pieces and replace them if they have any of these types of damage:
  - Any crease or tears in the headliner (A)
  - Any cracks or breakage in the grab handle (B)
  - Any damages around the grab handle holes (C) or sunvisor holes in the headliner
  - Any cracks in the sunvisor stay base (D)
  - Any bends or cracks in the sunvisor stay shaft (E)
  - Any cracks in the sunvisor base (F)
  - Any cracks or breakage in the vanity mirror base (G)
  - Any Velcro fasteners (H) and clip bases (I) which have come off the headliner
- When installing the grab handle, push on the handle against the bracket (J) until the clips (K) snap into place securely.
- Check if the clips are damaged or stress-whitened, and if necessary, replace them with new ones.
- Replace the removed cushion tape with new ones.
- Check that both sides of the headliner are securely attached to the trim.
- Make sure the headliner overlaps the trim pieces correctly (see page 24-160).
- When reinstalling the headliner through the tailgate opening, be careful not to fold or bend it. Also, be careful not to scratch the body.
- Reconnect the negative cable to the battery.
- Set the clock (without navigation system).
- Enter the anti-theft code for the audio and the navigation system (if equipped), then enter the XM audio presets (if equipped).
- Check for any DTCs that may have been set during repairs, and clear them.

Headliner

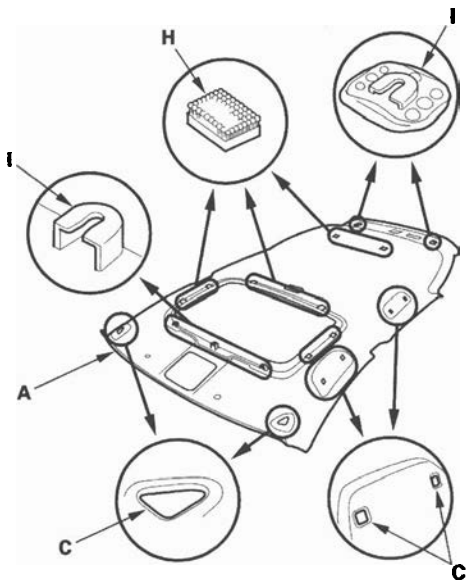

Grab handle

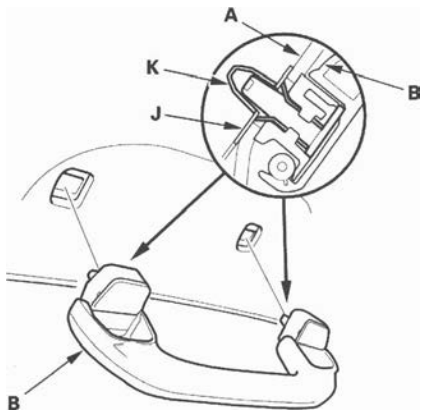

Sunvisor

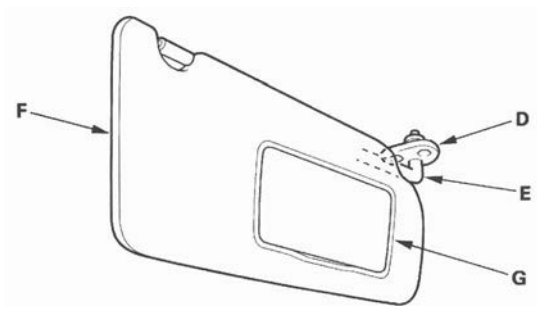

Carpet Replacement

Special Tools Required
KTC trim tool set SOJATP2014 *
* Available through the American Honda Tool and Equipment Program; call 888-424-6857

SRS components are located in this area. Review the SRS component locations (see page 24-13) and the precautions and procedures (see page 24-15) before doing repairs or service.

NOTE:
- Put on gloves to protect your hands.
- Use the appropriate tool from the KTC trim tool set to avoid damage when prying components.
- Take care not to damage, wrinkle, or twist the carpet.
- Be careful not to damage the dashboard or other interior trim pieces.

1. Remove these items:

   - Front seats, both sides (see page 20-118)
   - Rear seat, both sides (see page 20-135)
   - Front door sill trim, both sides (see step 1 on page 20-67)
   - Rear door sill trim, both sides (see step 2 on page 20-68)
   - Dashboard center lower cover (see step 3 on page 20-95)
   - Kick panels, both sides (see step 3 on page 20-67)
   - B-pillar lower trim (see step 3 on page 20-73)
   - Driver's dashboard undercover (see page 20-100)
   - Passenger's dashboard undercover (see page 20-105)
   - Center console (see page 20-89)
   - Steering joint cover (see page 17-32)

2. Detach the clips, then remove the footrest (A).

Fastener Locations
▷: Clip, 2

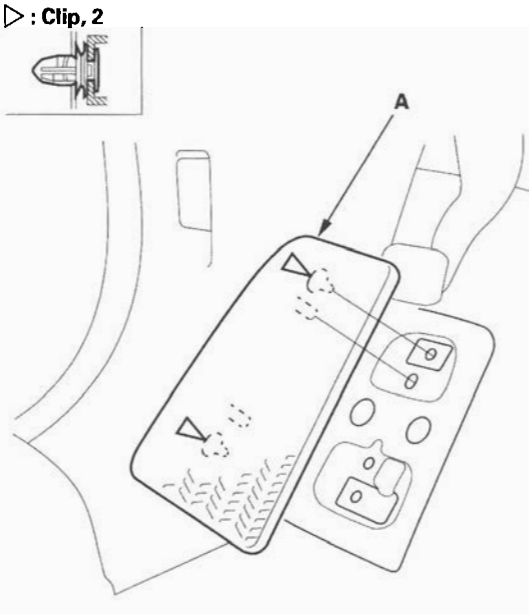

3. Remove the clips.

Fastener Locations
▷: Clip, 4

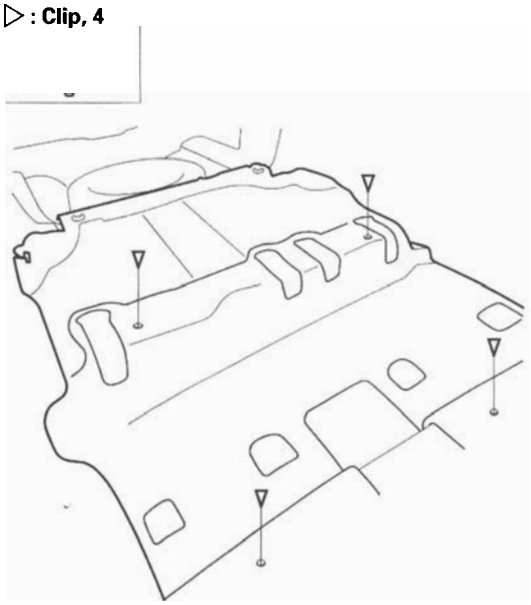

(cont'd)

Carpet Replacement (cont'd)

4. Release the fasteners (A), then pull back the carpet (B) from under the dashboard.

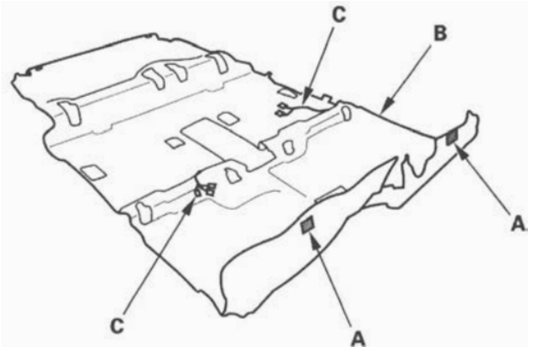

5. Pull the seat harnesses (C) out through the hole in the carpet, then remove the carpet.

6. From back of the front carpet: Release the hooks (A) of the base (B) with a flat-tip screwdriver, and push up the projections of the holder from the base to remove the floor mat holder (C).

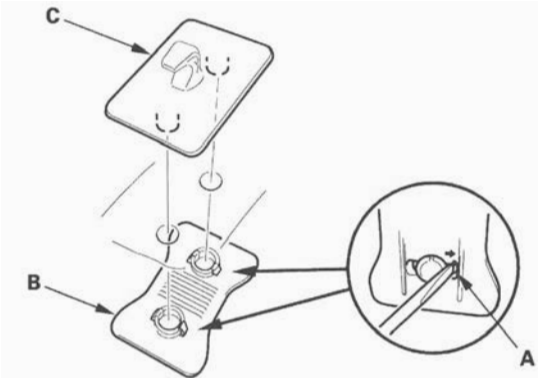

7. Install the carpet in the reverse order of removal, and note these items:

   - Take care not to damage, wrinkle, or twist the carpet.
   - Make sure the seat harnesses and routed correctly.
   - Check if the clips are damaged or stress-whitened, and if necessary, replace them with new ones.
   - Push the fasteners and clips into place securely.

Center Console Removal/Installation

Special Tools Required
KTC trim tool set SOJATP2014 *
* Available through the American Honda Tool and Equipment Program; call 888-424-6857

SRS components are located in this area. Review the SRS component locations (see page 24-13) and the precautions and procedures (see page 24-15) before doing repairs or service.

NOTE:
- Put on gloves to protect your hands.
- Use the appropriate tool from the KTC trim tool set to avoid damage when prying components.
- Take care not to scratch the front seat, dashboard, and related parts.

1. Slide the seat fully to the rear to access the front console trim.

2. From the front portion of the center console, detach the clips (A) by pulling out the front console trim (B) with a trim tool.

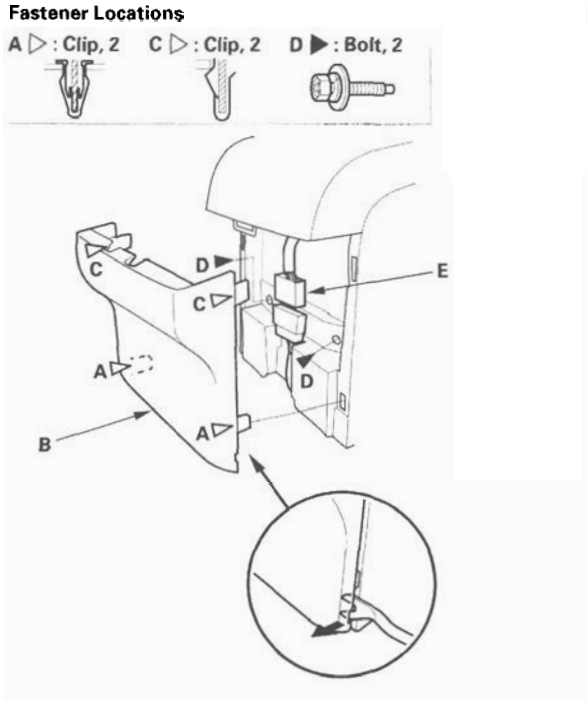

3. Detach the clips (C), then remove the front console trim. From the front portion of the center console, remove the bolts (D) and disconnect the subharness connector (E), and detach the harness clip.

4. Open the shutter (A), then remove the console box mat (B) and bolts. Lift up the center console (C) and remove it.

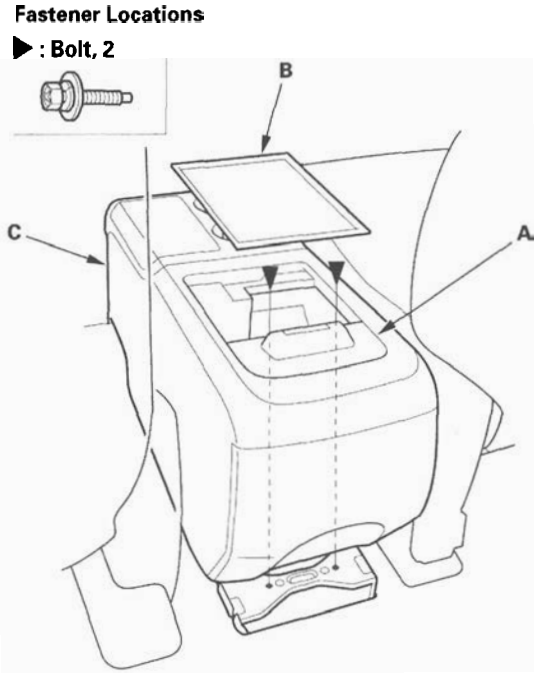

5. Install the center console in the reverse order of removal, and note these items:

- Make sure the connector is plugged in properly.
- Push the clips and hooks into place securely.
- Check if the clips are damaged or stress-whitened, and if necessary, replace them with new ones.

Center Console Disassembly/Reassembly

Special Tools Required
KTC trim tool set SOJATP2014 *
* Available through the American Honda Tool and Equipment Program; call 888-424-6857

NOTE:
- Put on gloves to protect your hands.
- Use the appropriate tool from the KTC trim tool set to avoid damage when prying components.
- Take care not to scratch the front seat, dashboard, and related parts.

1. Remove the center console (see page 20-89).

2. Remove the center console upper panel (A).

   -1 Disconnect the console accessory power socket connector (B) and the auxiliary jack assembly connector (C).
   -2 Gently pull the front portion of the center console upper panel up, and remove the clips (D).
   -3 Pull the rear portion of the center console upper panel up, remove the clips (E), and release the hooks (F).

Fastener Locations
D ▷ : Clip, 4 **E ▷ : Clip, 2**

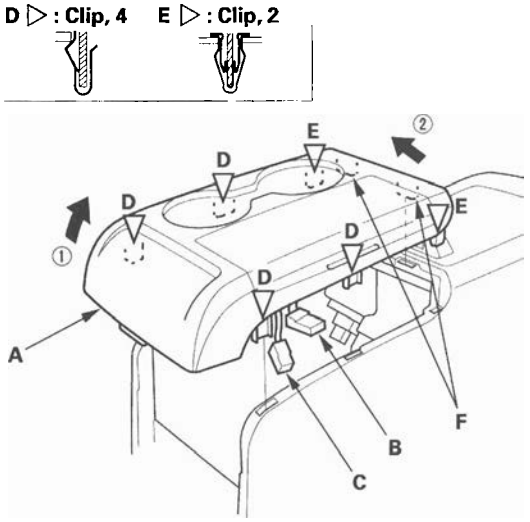

3. From the center console upper panel, remove the screws, then remove the CD box (A) and inner lid (B) or pocket.

Fastener Locations
▶ : Screw, 6

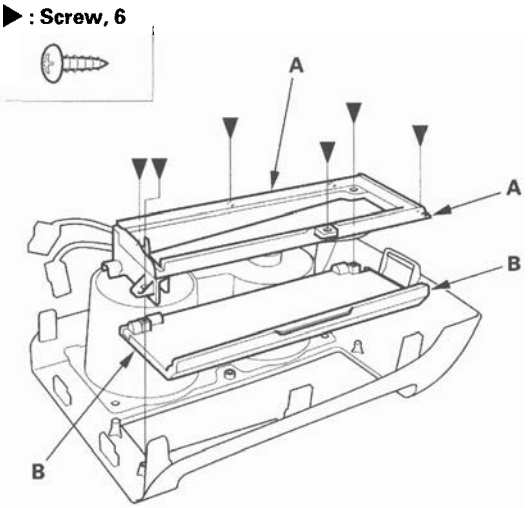

4. Remove the screws, then remove the cup holder (A). Detach the harness clips (B), and remove the console subharness (C) from the cup holder.

Fastener Locations
▶ : Screw, 4

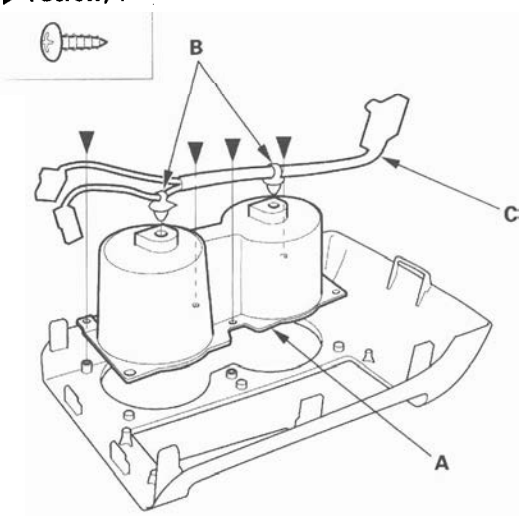

5. From the bottom of the center console (A), remove the screws.

Fastener Locations

▶ : Screw, 2

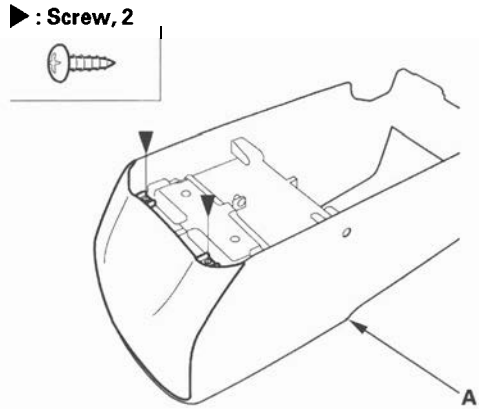

6. Gently pull out the center console rear cover (A) to detach the clips.

Fastener Locations

▷ : Clip, 2

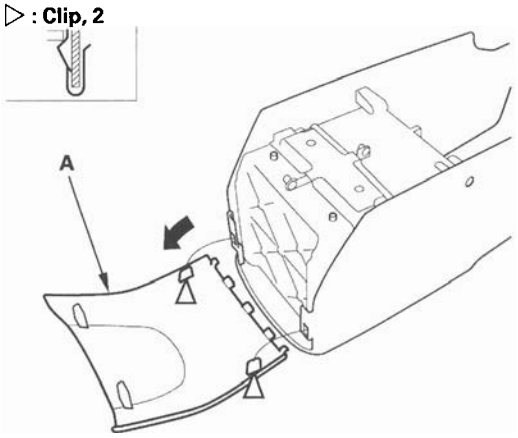

7. Remove the screws (A) and clips (B), then remove the console box (C).

Fastener Locations

A ▶ : Screw, 5 B ▷ : Clip, 2

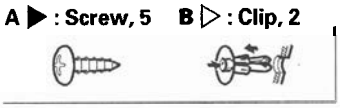

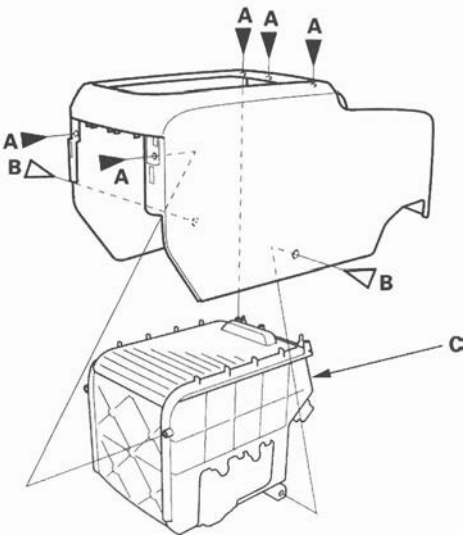

(cont'd)

Center Console Disassembly/Reassembly (cont'd)

8. Remove the screws (A, B), then remove the bracket (C) and jack panel (D).

Fastener Locations

A ▶ : Screw, 4 B ▶ : Screw, 3

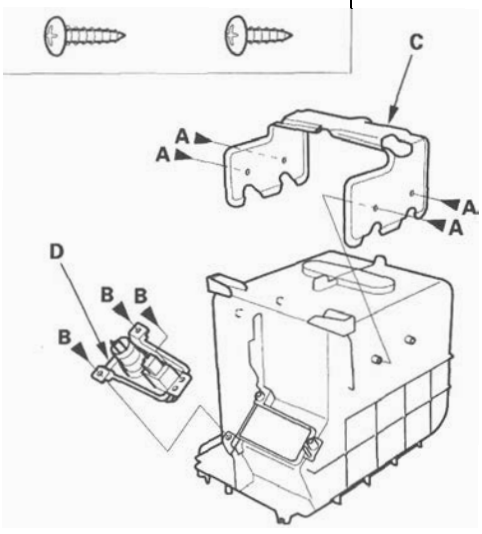

9. Reassembly the center console in the reverse order of disassembly, and note these items:

- Make sure all connectors are plugged in properly.
- Push the clips and hooks into place securely.
- Check if the clips are damaged or stress-whitened, and if necessary, replace them with new ones.

Center Upper Dashboard Panel Removal/Installation

Special Tools Required
KTC trim tool set SOJATP2014 *
* Available through the American Honda Tool and Equipment Program; call 888-424-6857

NOTE:
- Put on gloves to protect your hands.
- Use the appropriate tool from the KTC trim tool set to avoid damage when prying components.
- Take care not to scratch the dashboard and related parts.

1. Remove the center upper dashboard panel (A).

   -1 Apply protective tape (B) on the dashboard panel next to the center upper dashboard panel. Pry the middle edge of the panel up with a flat-tip screwdriver (C) wrapped with protective tape.
   -2 While carefully lifting the panel with a flat-tip screwdriver, insert the trim tool (D) into the gap between the dashboard and the panel. Use the trim tool to gently pry the panel up partially to release the hooks (E) and clips (F), then pull the panel up to release the clips (G).

Fastener Locations
F, G ▷ : Clip, 4

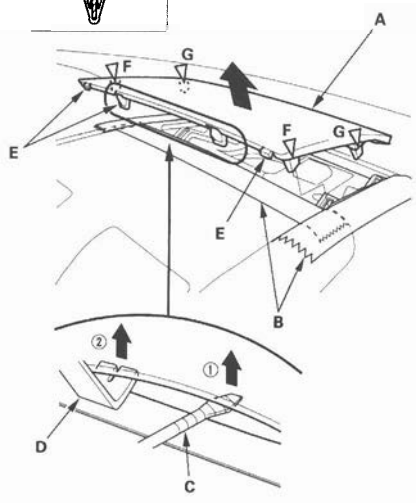

2. Install the panel in the reverse order of removal, and note these items:

   - Check if the clips are damaged or stress-whitened, and if necessary, replace them with new ones.
   - Push the clips into place securely.

Dashboard Center Vent Removal/Installation

Special Tools Required
KTC trim tool set SOJATP2014 *
* Available through the American Honda Tool and Equipment Program; call 888-424-6857

NOTE:
- Put on gloves to protect your hands.
- Use the appropriate tool from the KTC trim tool set to avoid damage when prying components.
- Take care not to scratch the dashboard and related parts.

1. Remove the center upper dashboard panel (see page 20-93).

2. From the center upper dashboard panel opening, pull the edges of the dashboard center vent (A) slightly toward you to release the clips.

   NOTE: If the vent is pulled upward, the audio panel (B) will be damaged.

Fastener Locations
▷ : Clip, 3

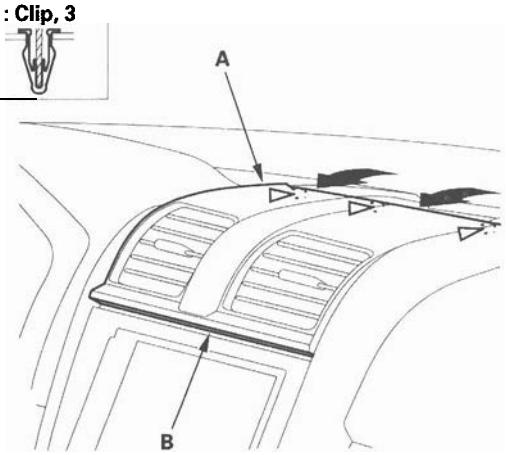

(cont'd)

Dashboard Center Vent Removal/Installation (cont'd)

3. Detach the lower clips, and release the hooks (A) by pulling the dashboard center vent (B) back.

Fastener Locations

▷ : Clip, 2

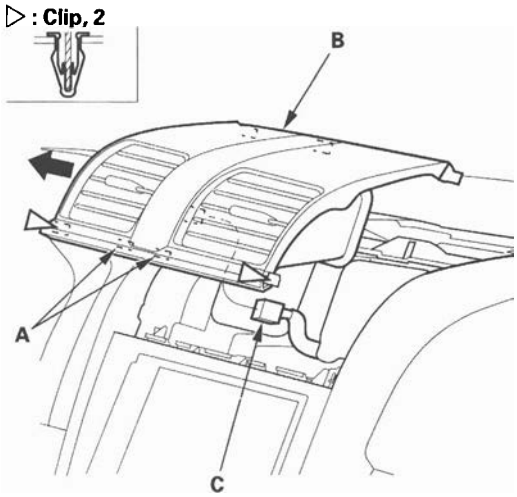

4. Disconnect the hazard warning switch connector (C), and remove the center vent.

5. If necessary, remove the screws, then remove the center vent (A) from the vent panel (B).

Fastener Locations

▶ : Screw, 6

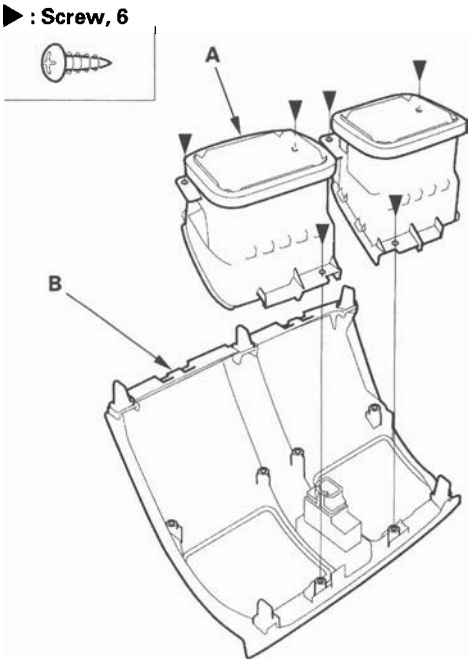

6. Install the center vent in the reverse order of removal, and note these items:

- Check if the clips are damaged or stress-whitened, and if necessary, replace them with new ones.
- Push the clips into place securely.
- Make sure the connector is plugged in properly.

Shift Lever Panel Removal/ Installation

Special Tools Required
KTC trim tool set SOJATP2014 *
* Available through the American Honda Tool and Equipment Program; call 888-424-6857

NOTE:
- Put on gloves to protect your hands.
- Use the appropriate tool from the KTC trim tool set to avoid damage when prying components.
- Take care not to scratch the dashboard and related parts.

1. Remove the HVAC control unit (see page 21-53).

2. From the heater control panel opening, detach the clips and hooks (A) by pulling the shift center panel (B) up. Disconnect the seat heater switch connectors (C) if equipped.

Fastener Locations
▷ : **Clip, 4**

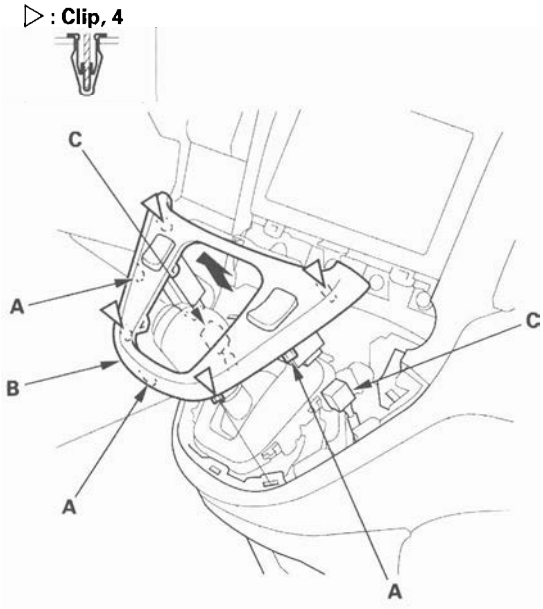

3. Install the panel in the reverse order of removal, and note these items:

- Check if the clips are damaged or stress-whitened, and if necessary, replace them with new ones.
- Push the clips into place securely.
- Make sure the connectors are plugged in properly.

Dashboard Center Lower Cover Removal/Installation

Special Tools Required
KTC trim tool set SOJATP2014 *
* Available through the American Honda Tool and Equipment Program; call 888-424-6857

NOTE:
- Put on gloves to protect your hands.
- Use the appropriate tool from the KTC trim tool set to avoid damage when prying components.
- Take care not to scratch the dashboard and related parts.

1. Remove the front console cover, both sides (see page 20-102).

2. Remove the screw.

3. Gently pull out upper of the dashboard center lower cover (A) to release the clips, then remove the cover.

Fastener Locations
▶ : **Screw, 1** ▷ : **Clip, 4**

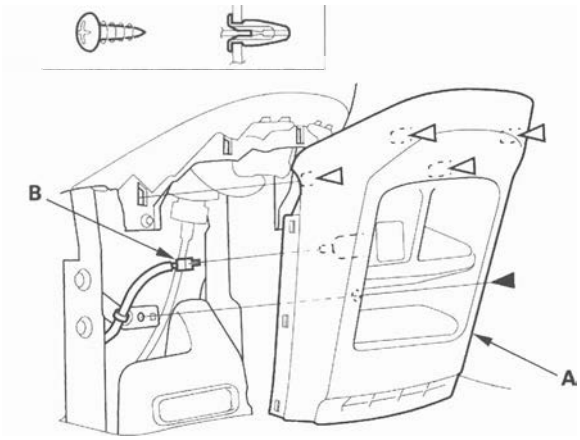

4. Disconnect the front accessory power socket connector (B).

5. Install the panel in the reverse order of removal, and note these items:

- Check if the clips are damaged or stress-whitened, and if necessary, replace them with new ones.
- Push the clips into place securely.
- Make sure the connector is plugged in properly.

Dashboard Center Trim Removal/ Installation

Special Tools Required
KTC trim tool set SOJATP2014 *
* Available through the American Honda Tool and Equipment Program; call 888-424-6857

NOTE:
- Put on gloves to protect your hands.
- Use the appropriate tool from the KTC trim tool set to avoid damage when prying components.
- Take care not to scratch the dashboard and related parts.

1. Remove these items:
   - Center upper dashboard panel (see page 20-93)
   - Dashboard center vent (see page 20-93)
   - HVAC control unit (see page 21-53)
   - Driver's vent panel (see page 20-98)
   - Passenger's vent panel (see page 20-104)
   - Shift lever panel (see page 20-95)
   - Instrument panel (see page 20-97)
   - Front passenger's airbag (see page 24-162)
   - Navigation display unit, with navigation system (see page 23-140)
   - Audio unit (see page 23-76)
2. Remove the screws.
3. Gently pull out the dashboard center trim (A) to release the clips, then remove the trim.

Fastener Locations
▶: Screw, 2 ▷: Clip, 6

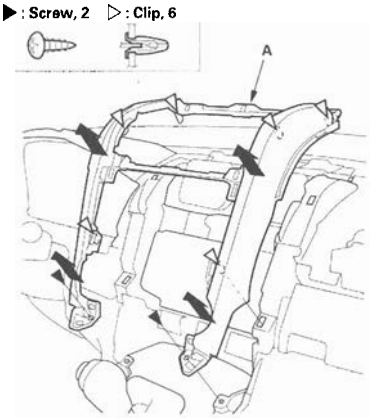

4. Install the trim in the reverse order of removal, and note these items:
   - Check if the clips are damaged or stress-whitened, and if necessary, replace them with new ones.
   - Push the clips into place securely.

Instrument Upper Visor Removal/ Installation

Special Tools Required
KTC trim tool set SOJATP2014 *
* Available through the American Honda Tool and Equipment Program; call 888-424-6857

NOTE:
- Use the appropriate tool from the KTC trim tool set to avoid damage when prying components.
- Take care not to scratch the dashboard and related parts.

1. Release the tilt/telescopic lock lever, tilt the steering wheel fully down, and pull it full out.
2. Gently pull out on the upper edge of the instrument upper visor (A) to detach the upper clips.

Fastener Locations
▷: Clip, 2

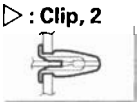

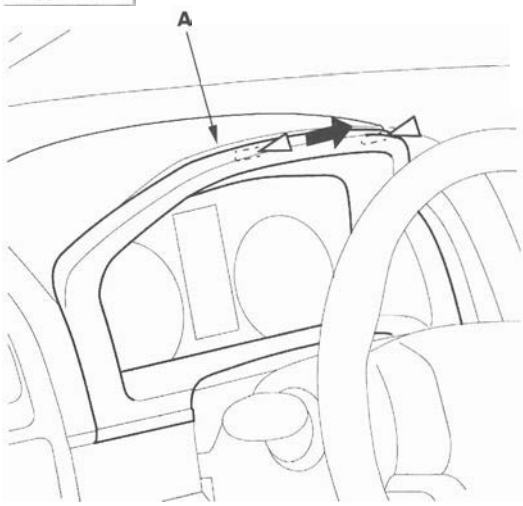

3. Detach the lower clips, and release the hooks (A) by pulling the instrument upper visor (B) back.

Fastener Locations

▷ : **Clip, 6**

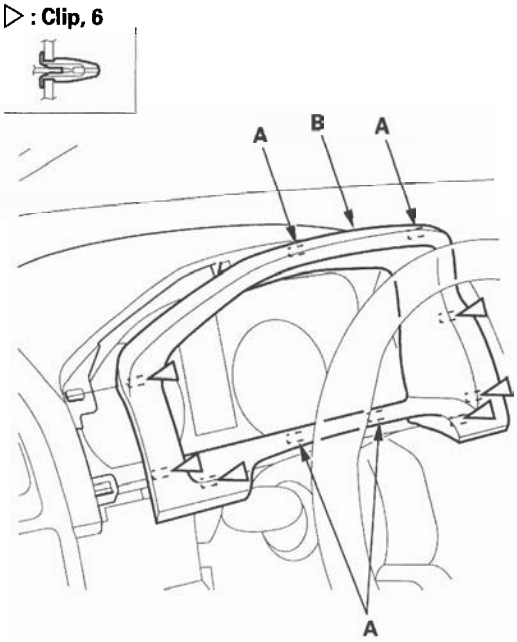

4. Install the visor in the reverse order of removal, and note these items:

   - Check if the clips are damaged or stress-whitened, and if necessary, replace them with new ones.
   - Push the clips into place securely.

Instrument Panel Removal/ Installation

Special Tools Required

KTC trim tool set SOJATP2014 *

* Available through the American Honda Tool and Equipment Program; call 888-424-6857

NOTE:

- Put on gloves to protect your hands.
- Use the appropriate tool from the KTC trim tool set to avoid damage when prying components.
- Take care not to scratch the dashboard and related parts.

1. Remove these items:

   - Driver's vent panel (see page 20-98)
   - Center upper dashboard panel (see page 20-93)
   - Instrument upper visor (see page 20-96)

2. Gently pull up the instrument panel (A) by hand from the driver's vent panel and center upper panel openings to release the clips.

Fastener Locations

▷ : **Clip, 11**

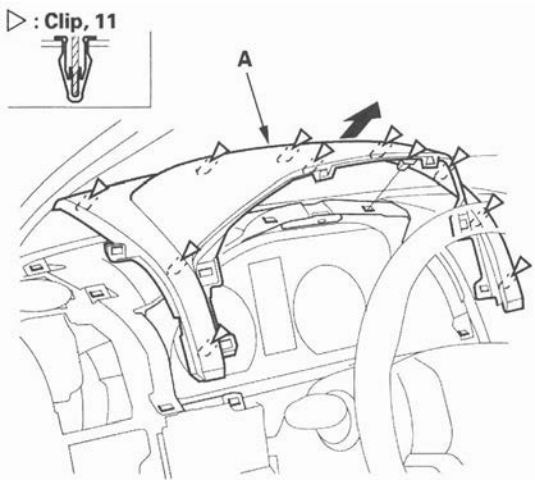

3. Install the panel in the reverse order of removal, and note these items:

   - Check if the clips are damaged or stress-whitened, and if necessary, replace them with new ones.
   - Push the clips into place securely.

Driver's Vent Panel Removal/Installation

Special Tools Required
KTC trim tool set SOJATP2014 *
* Available through the American Honda Tool and Equipment Program; call 888-424-6857

NOTE:
- Put on gloves to protect your hands.
- Use the appropriate tool from the KTC trim tool set to avoid damage when prying components.
- Take care not to scratch the dashboard and related parts.

1. Remove the driver's vent panel (A).
   -1 Apply protective tape (B) to the dashboard side panel (C) next to the driver's vent panel. Use the trim tool to pry the front left side of the panel partially out.
   -2 Pry the front bottom of the panel slightly toward you.

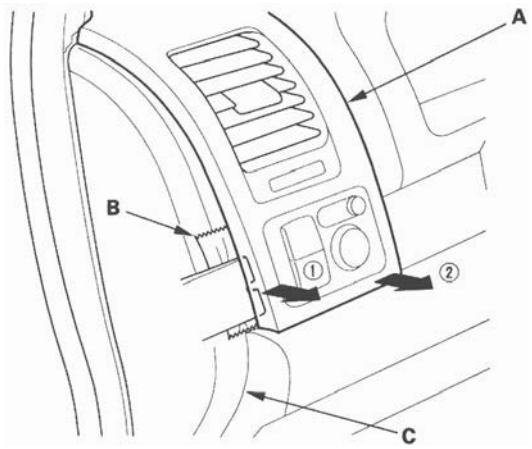

2. Pull the lower portion of the driver's vent panel (A) slightly toward you to release the clips (B). Detach the clips (C) by pulling the middle and upper portions of the panel toward you by hand.

Fastener Locations
B, C▷: Clip, 6



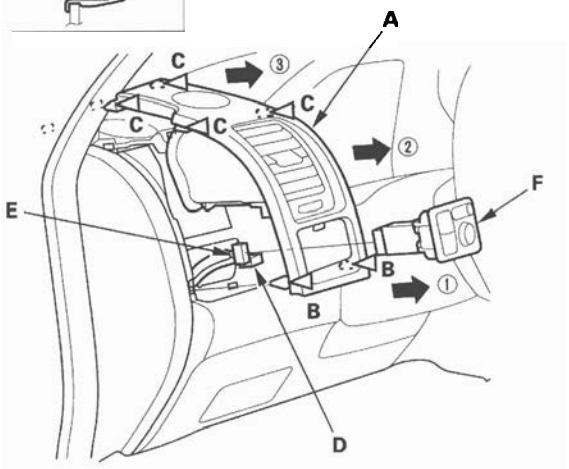

3. Disconnect the power mirror switch connector (D) and VSA OFF switch connector (E), then if necessary remove the switch (F) from the panel.

4. If necessary, remove the screws, then remove the driver's vent (A) from the driver's vent panel (B).

Fastener Locations

▶ : Screw, 4

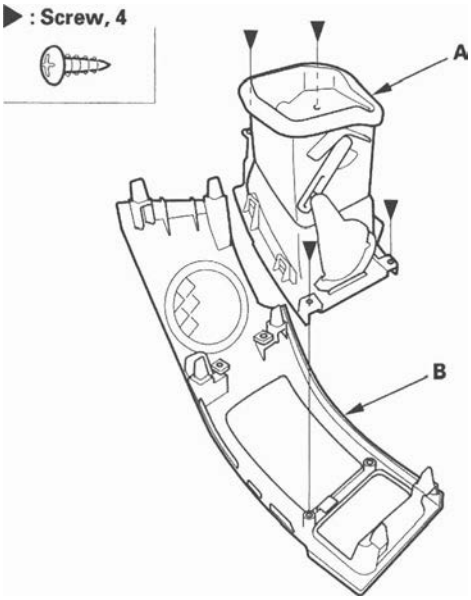

5. Install the panel in the reverse order of removal, and note these items:

   - Check if the clips are damaged or stress-whitened, and if necessary, replace them with new ones.
   - Push the clips into place securely.
   - Make sure the connectors are plugged in properly.

Driver's Inner Dashboard Trim Removal/Installation

Special Tools Required

KTC trim tool set SOJATP2014 *

* Available through the American Honda Tool and Equipment Program; call 888-424-6857

NOTE:

- Put on gloves to protect your hands.
- Use the appropriate tool from the KTC trim tool set to avoid damage when prying components. Take care not to scratch the dashboard and related parts.

1. Remove the instrument upper visor (see page 20-96).

2. Gently pull out along the driver's inside dashboard trim (A) to release the clips and hooks (B), then remove the trim.

Fastener Locations

▷ : Clip, 2

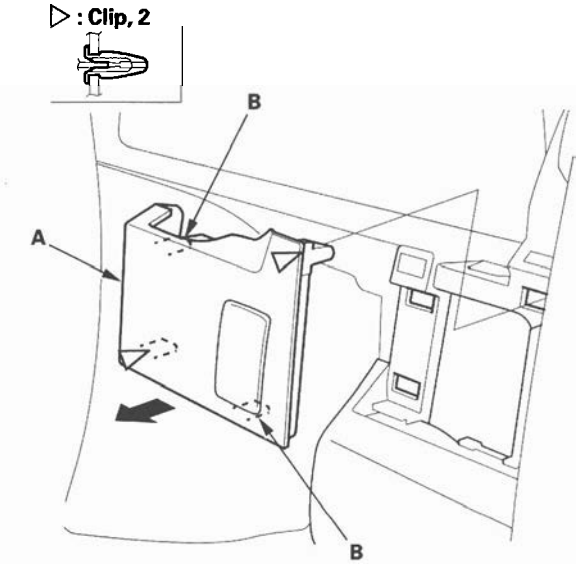

3. Install the trim in the reverse order of removal, and note these items:

   - Check if the clips are damaged or stress-whitened, and if necessary, replace them with new ones.
   - Push the clips and hooks into place securely.

Driver's Outer Dashboard Trim Removal/Installation

Special Tools Required
KTC trim tool set SOJATP2014 *
* Available through the American Honda Tool and Equipment Program; call 888-424-6857

NOTE:
- Put on gloves to protect your hands.
- Use the appropriate tool from the KTC trim tool set to avoid damage when prying components.
- Take care not to scratch the dashboard and related parts.

1. Remove the instrument upper visor (see page 20-96).

2. Pull out the upper edge of the driver's outer dashboard trim (A) by releasing the hooks (B) with a trim tool, then remove the trim.

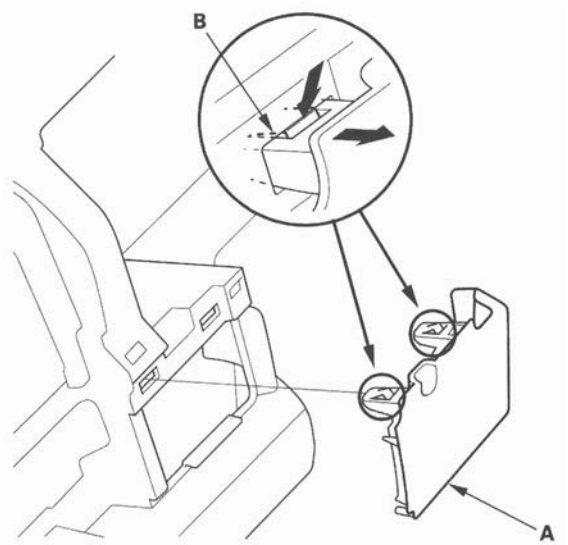

3. Install the panel in the reverse order of removal, and note these items:

   - Check if the clips are damaged or stress-whitened, and if necessary, replace them with new ones.
   - Push the hooks into place securely.

Driver's Dashboard Undercover Removal/Installation

NOTE: Take care not to scratch the dashboard and related parts.

1. Remove the driver's dashboard undercover (A).

   -1 Turn the lock knob (B) 90 °.
   -2 Gently pull down the rear edge to detach the clip.
   -3 Pull the cover away to release the pin (C) from the holder (D).

Fastener Location
▷: **Clip, 1**

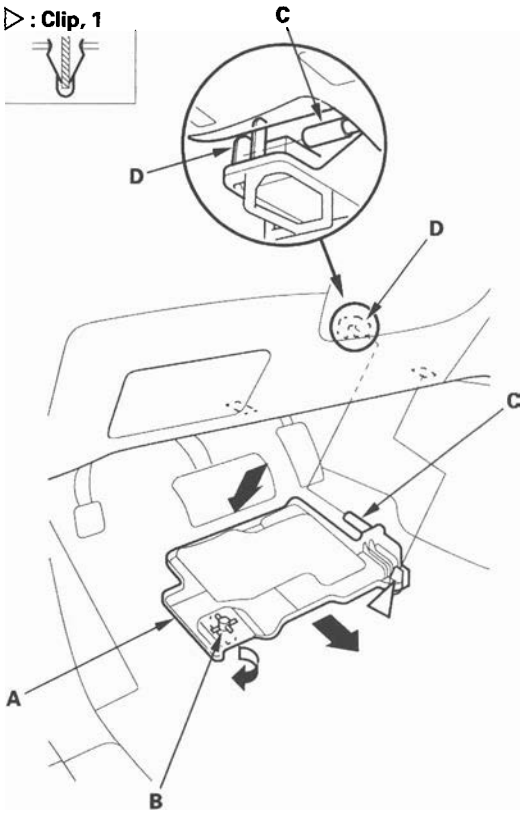

2. Install the undercover in the reverse order of removal, and note these items:

   - Check if the clip is damaged or stress-whitened, and if necessary, replace it with a new one.
   - Push the clip into place securely.

Driver's Dashboard Lower Cover Removal/Installation

Special Tools Required
KTC trim tool set SOJATP2014 *
* Available through the American Honda Tool and Equipment Program; call 888-424-6857

NOTE:
- Put on gloves to protect your hands.
- Use the appropriate tool from the KTC trim tool set to avoid damage when prying components.
- Take care not to scratch the dashboard and related parts.

1. Adjust the steering column upward.

2. Remove the driver's dashboard undercover (see page 20-100).

3. Gently pull out on the lower edge of the dashboard lower cover (A) to detach the lower clips.

Fastener Locations
▷ : **Clip, 3**

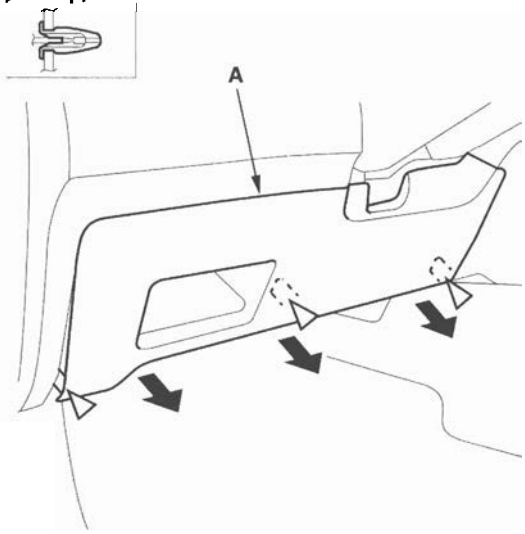

4. Detach the clips, and release the hooks (A) by pulling the driver's dashboard lower cover (B) back.

Fastener Locations
▷ : **Clip, 4**

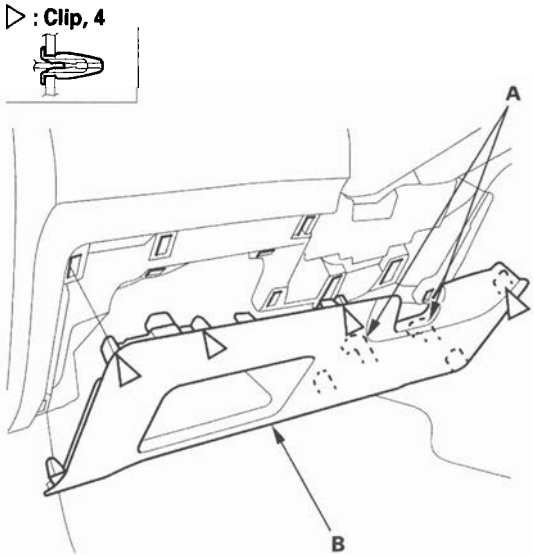

5. If necessary, remove the screws, then remove the driver's lower pocket (A).

Fastener Locations
▶ : **Screw, 3**

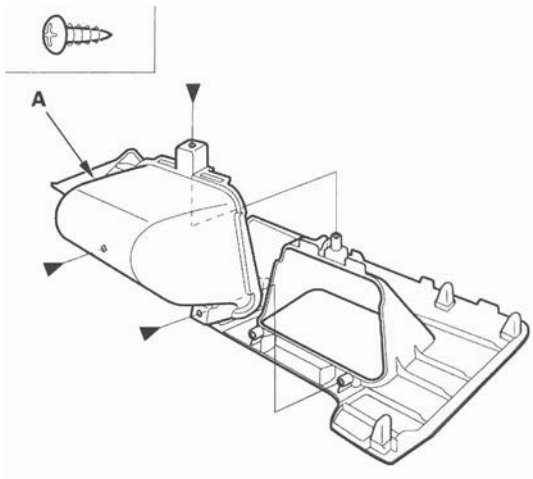

6. Install the cover in the reverse order of removal, and note these items:

   - Check if the clips are damaged or stress-whitened, and if necessary, replace them with new ones.
   - Push the clips and hooks into place securely.

Front Console Cover Removal/ Installation

NOTE: Take care not to scratch the dashboard and related parts.

1. Remove the console cover (A).
   1. Remove the clips (B, C).
   2. Gently pull out the cover to detach the clips (D).
   3. Driver's side: Pull the cover away to release the pin (E) from the holder (F).
      Passenger's side: Pull the cover to release the hook (G).

Driver's side

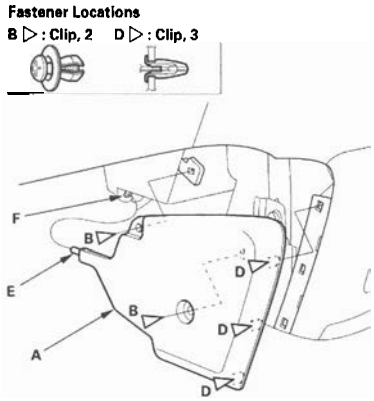

Passenger's side

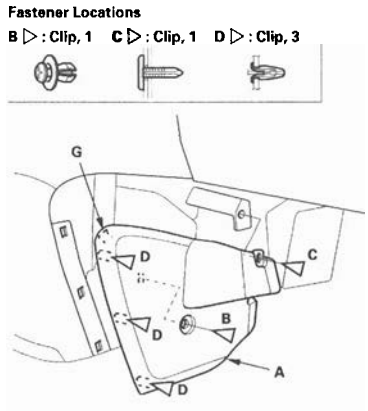

2. Install the cover in the reverse order of removal, and note these items:
   - Check if the clips are damaged or stress-whitened, and if necessary, replace them with new ones.
   - Push the clips and hook into place securely.

Passenger's Tray Removal/ Installation

Special Tools Required
KTC trim tool set SOJATP2014 *
* Available through the American Honda Tool and Equipment Program; call 888-424-6857

SRS components are located in this area. Review the SRS component locations (see page 24-13) and the precautions and procedures (see page 24-15) before doing repairs or service.

NOTE:
- Use the appropriate tool from the KTC trim tool set to avoid damage when prying components.
- Take care not to scratch the dashboard and related parts.

1. Remove the passenger's vent panel (see page 20-104).
2. Open the lid.
3. Detach the hook of the glove box damper and release the glove box stop on each side from the dashboard by pushing them inside (see step 1 on page 20-105).
4. Lift up the mat. Pull out the side edge of the side lid (A) by hand to release the hooks (B), then remove the side lid.

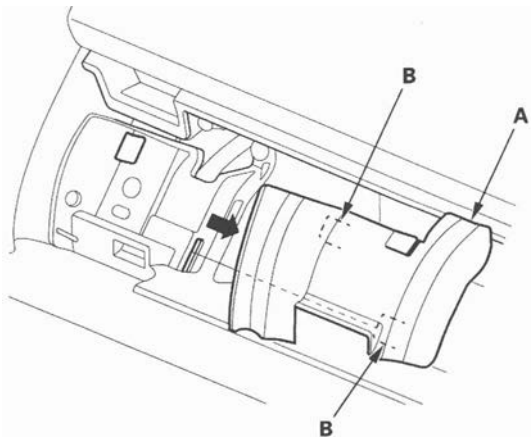

5. Remove the access panel (A), then remove the screws from the tray (B).

Fastener Locations

▶ : Screw, 3

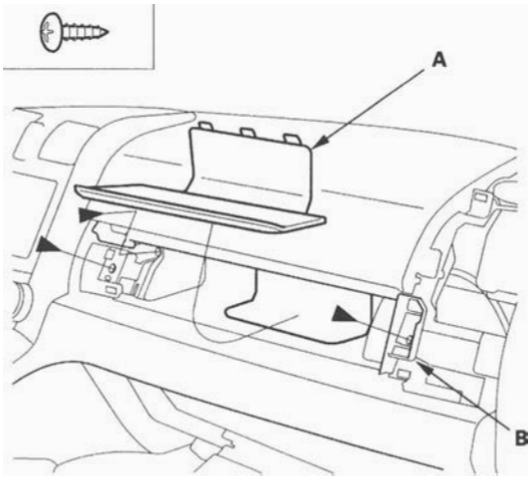

6. Remove the screws from the access panel opening (A).

Fastener Locations

▶ : Screw, 3

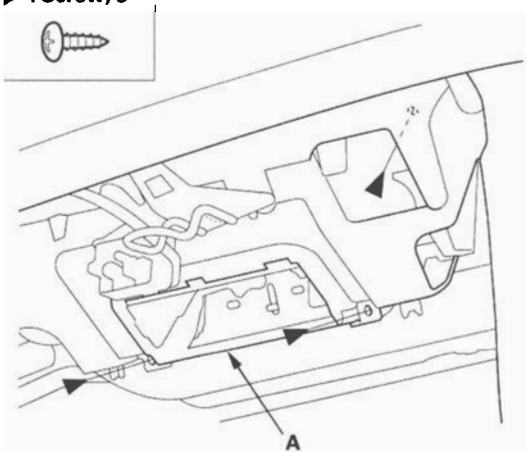

7. Pull out the right portion of the tray (A) to release the hooks (B).

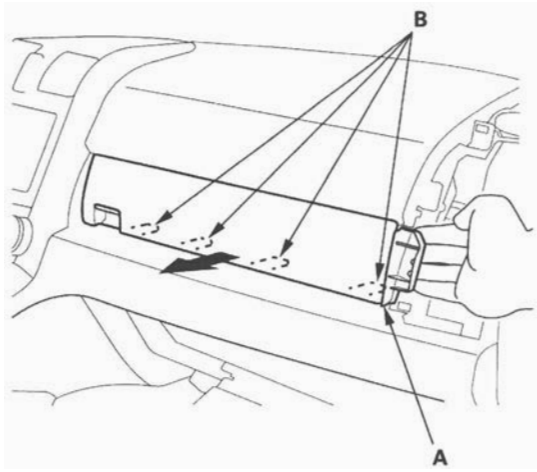

8. Slide the tray (A) toward the right, then pull out the right end of the tray and remove it from the dashboard.

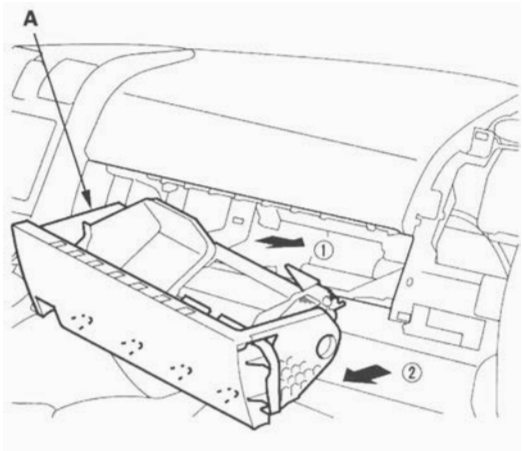

9. Install the tray in the reverse order of removal.

Passenger's Vent Panel Removal/Installation

Special Tools Required
KTC trim tool set SOJATP2014 *
* Available through the American Honda Tool and Equipment Program; call 888-424-6857

NOTE:
- Put on gloves to protect your hands.
- Use the appropriate tool from the KTC trim tool set to avoid damage when prying components.
- Take care not to scratch the dashboard and related parts.

1. Open the passenger's tray lid.
2. Remove the passenger's vent panel (A).
   -1 From the tray lid opening, pull the left side edge of the panel out by hand.
   -2 Pry the front bottom of the panel slightly you to detach the lower clips.

Fastener Locations
▷ : Clip, 2

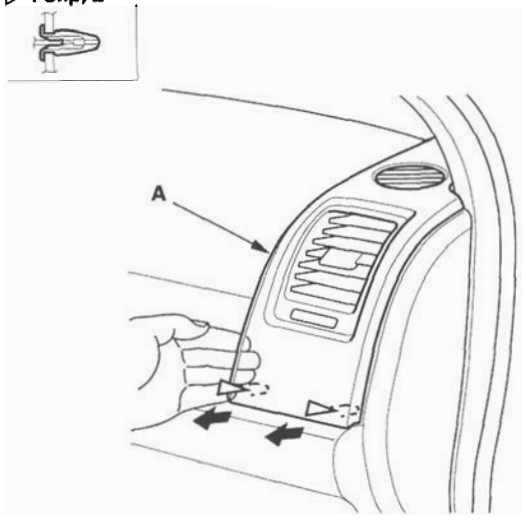

3. Pull the lower portion of the passenger's vent panel (A) partially out by hand. Detach the upper clips by pulling the middle and upper portions of the panel toward you.

Fastener Locations
▷ : Clip, 4

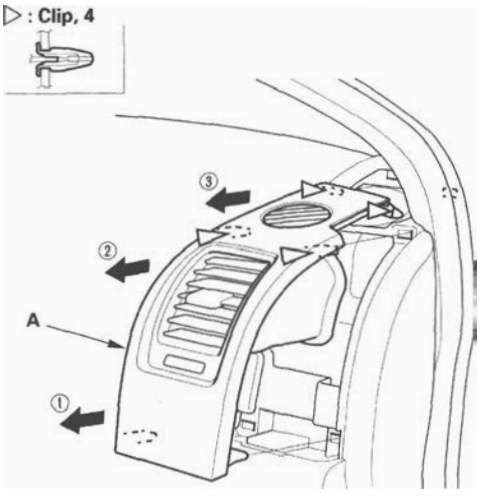

4. If necessary, remove the screws, then remove the passenger's vent (A) from the passenger's vent panel (B).

Fastener Locations
▶ : Screw, 4

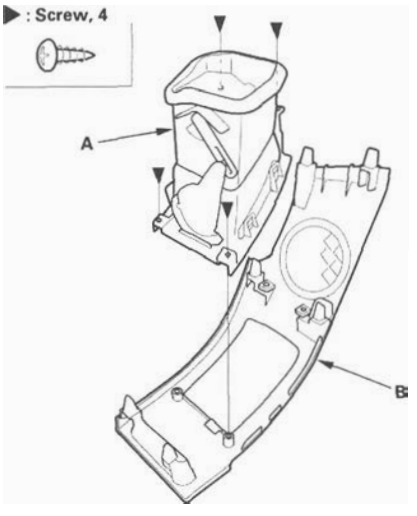

5. Install the panel in the reverse order of removal, and note these items:
   - Check if the clips are damaged or stress-whitened, and if necessary, replace them with new ones.
   - Push the clips into place securely.

Passenger's Dashboard Undercover Removal/Installation

NOTE: Take care not to scratch the dashboard and related parts.

1. Remove the passenger's dashboard undercover (A).
   -1 Gently pull down the front edge to detach the clips.
   -2 Pull the cover away to release the pins (B) of the cover.

Fastener Locations

▷: Clip, 3

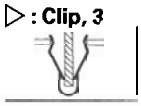

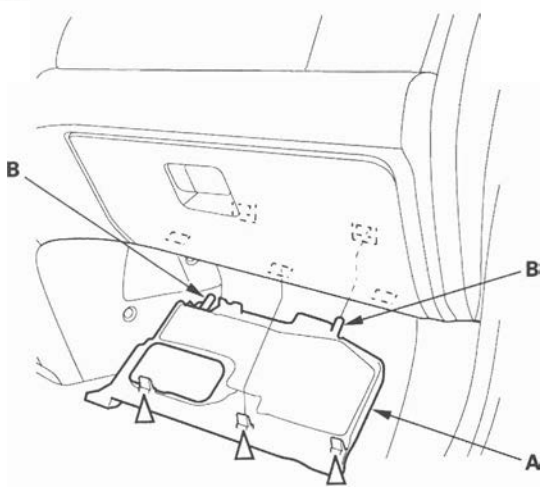

2. Install the cover in the reverse order of removal, and push the clips into place securely.

Glove Box Removal/Installation

NOTE: Take care not to scratch the dashboard and related parts.

1. Open the glove box (A), and detach the hook (B) of the glove box damper. While holding the glove box, release the glove box stop (C) on each side from the dashboard by pushing them in.

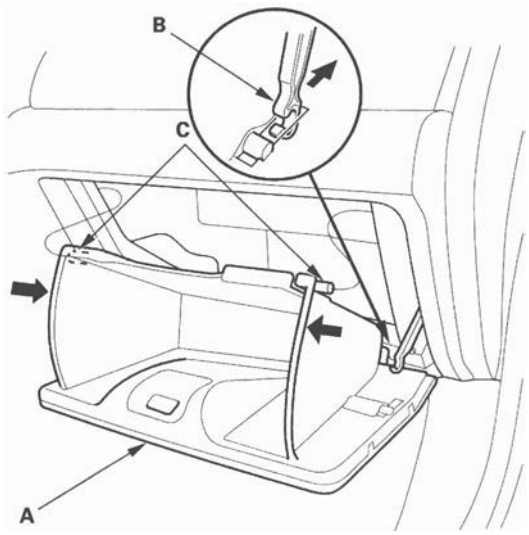

2. Close the glove box (A), then remove the bolts and remove the glove box.

Fastener Locations

▶: Screw, 2



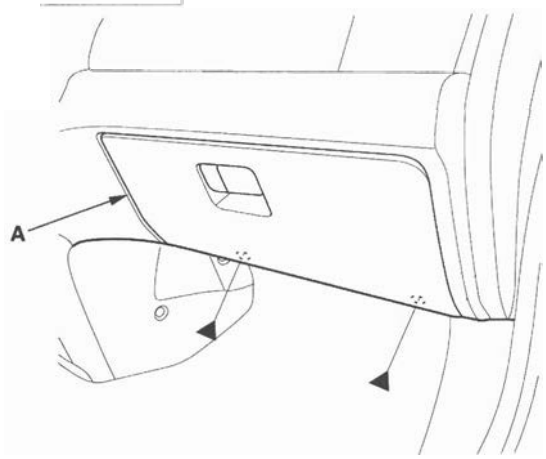

3. Install the glove box in the reverse order of removal.

Glove Box Damper Replacement

NOTE:
- Put on gloves to protect your hands.
- Take care not to scratch the dashboard and related parts.

1. Remove the these items:
   - Glove box (see page 20-105)
   - Dashboard side cover, passenger's side
2. Detach the clip of the glove box damper (A) by pinching it to release from inside the dashboard, then remove the damper.

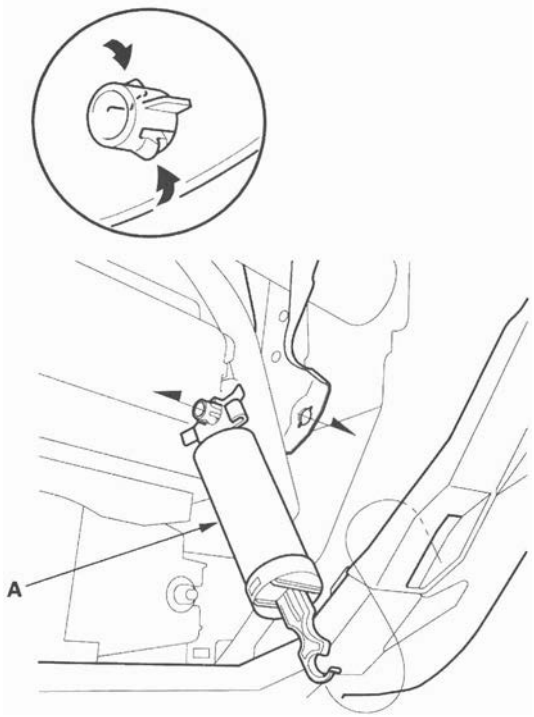

3. Install the damper in the reverse order of removal.

Glove Box Striker Replacement

NOTE: Take care not to scratch the dashboard and related parts.

1. For some models: Remove the glove box light (A).

Fastener Locations

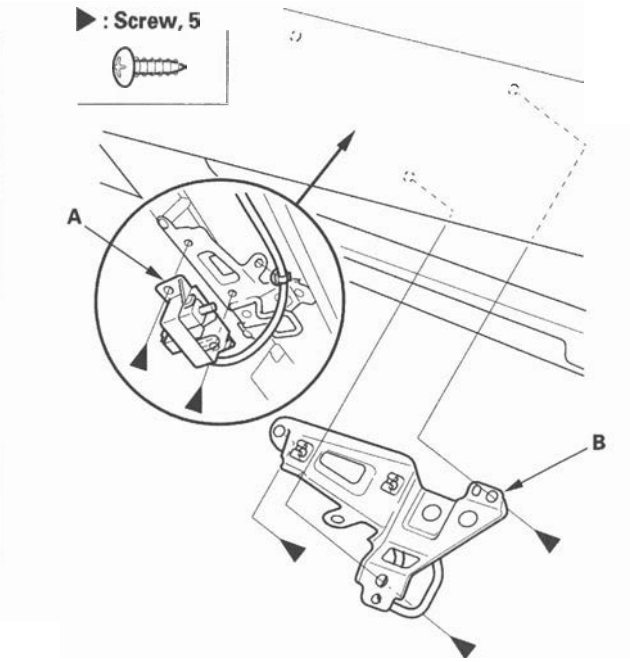

2. Detach the hook of the glove box damper and release the glove box stop on each side from the dashboard by pushing them inside (see step 1 on page 20-105).
3. Remove the screws, then remove the glove box striker (B).
4. Install the striker in the reverse order of removal.

Dashboard Glove Box Cover Removal/Installation

NOTE: Take care not to scratch the dashboard and related parts.

1. Remove the dashboard/steering hanger beam (see page 20-109).
2. Remove the steering/steering hanger beam from the dashboard (see page 20-114).
3. Remove the screws, then remove the dashboard glove box center cover (A) or the dashboard glove box outer cover (B).

Center

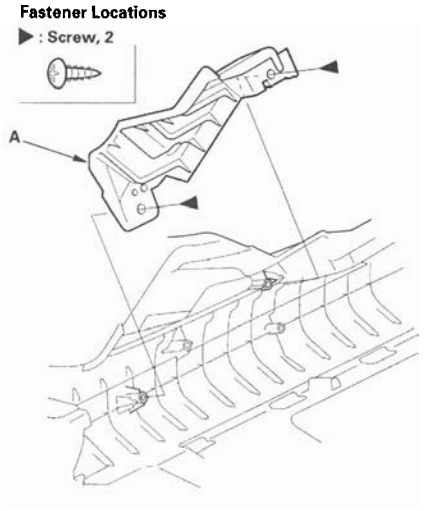

Outer

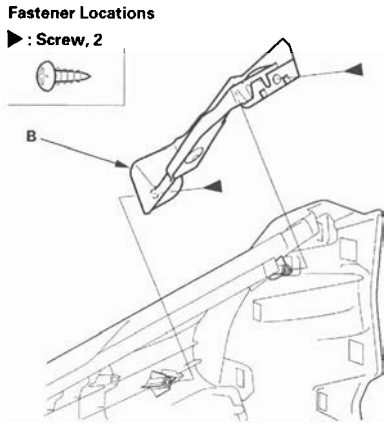

4. Install the cover in the reverse order of removal.

Column Cover Removal/Installation

SRS components are located in this area. Review the SRS component locations (see page 24-13) and the precautions and procedures (see page 24-15) before doing repairs or service.

NOTE: Take care not to scratch the dashboard and related parts.

1. Release the tilt/telescopic lock lever, tilt the steering wheel to fully down, and pull it fully out.
2. Insert a suitable sized screwdriver or equivalent tool (A) along the guide rib (B) into the lever hole in the lower column cover (C).

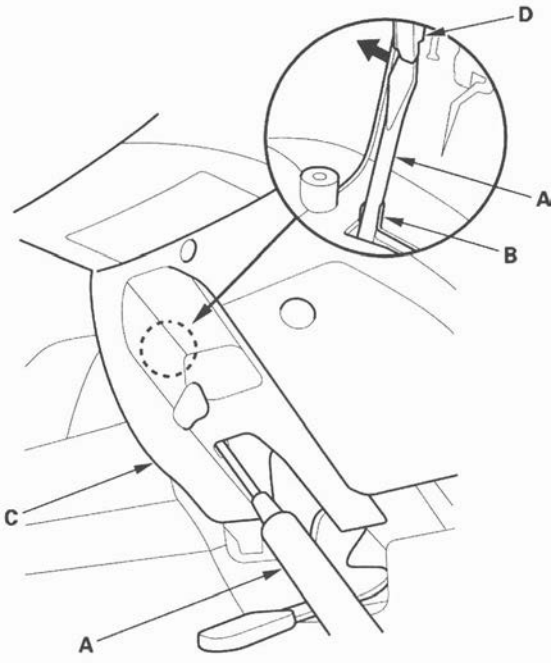

3. Release the hook (D) located on the left side of the upper column cover. The right side hook on the upper column cover can't be released from the inside.

(cont'd)

Column Cover Removal/Installation (cont'd)

4. Turn the steering wheel to left. Release the pawl (A) of the upper column cover (B) while pushing the lower column cover from the front side. Carefully release the hooks, noting the hooks (C) may break if upper column cover is pulled up too hard.

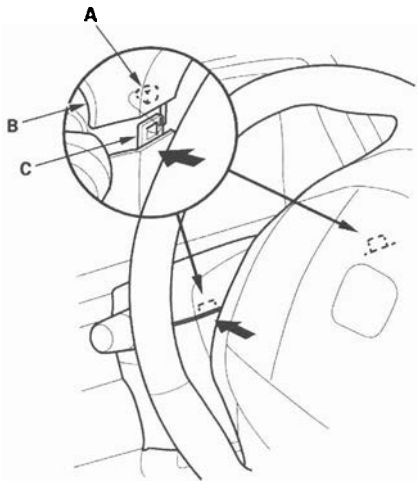

5. Turn the steering wheel to right. Release the pawl on the upper column cover the same as the step 4.

6. Separate the upper column cover (A) from the lower column cover (B) by pulling up it lightly. Release the pins (C) of the cover to remove it.

Fastener Locations

D ▶ : Screw, 2 E ▶ : Screw, 1

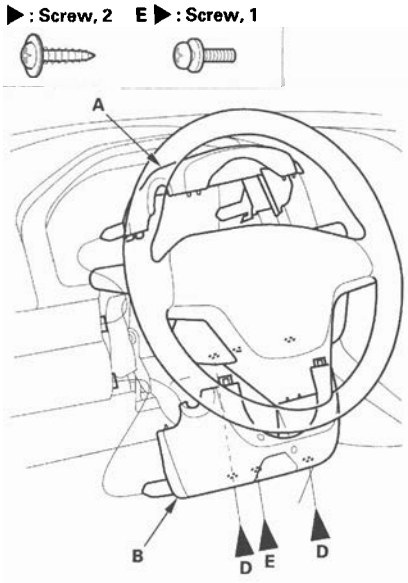

7. Remove the screws (D, E), then remove the column lower cover.

8. If necessary, remove these items, then remove the clips and release the Velclo fastener (A), then pull out the column cover seal (B) from dashboard.

   - Instrument upper visor (see page 20-96)
   - Dashboard driver's lower cover (see page 20-101)

Fastener Locations

▷ : Clip, 4

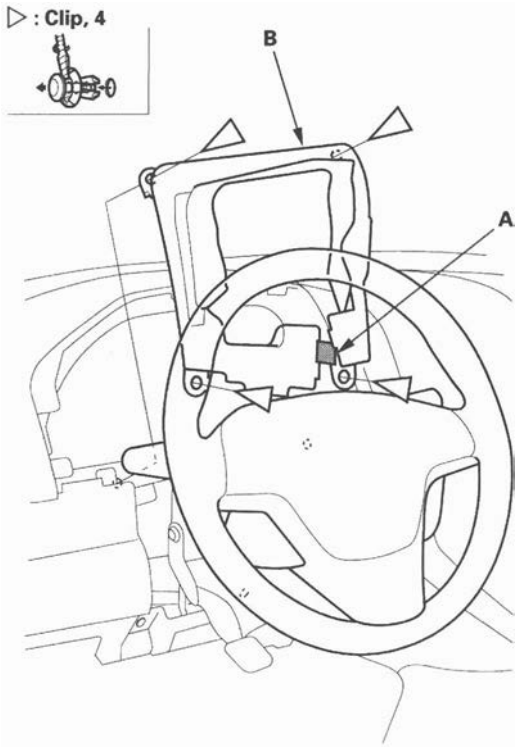

9. Install the cover in the reverse order of removal, and note these items:

   - Check if the clips are damaged or stress-whitened, and if necessary, replace them with new ones.
   - Push the clips into place securely.

Dashboard/Steering Hanger Beam Removal/Installation

Special Tools Required
KTC trim tool set SOJATP2014 *
* Available through the American Honda Tool and Equipment Program; call 888-424-6857

SRS components are located in this area. Review the SRS component locations (see page 24-13) and the precautions and procedures (see page 24-15) before doing repairs or service.

NOTE:
- Have an assistant help you when removing and installing the dashboard.
- Put on gloves to protect your hands.
- Use the appropriate tool from the KTC trim tool set to avoid damage when prying components.
- Take care not to scratch the dashboard and related parts.

1. Make sure you have the anti-theft codes for the audio and the navigation system (if equipped), then write down the XM audio presets (if equipped).

2. Disconnect the negative cable from the battery, and wait at least 3 minutes before beginning work.

3. Remove these items:

   - Front seats, both sides (see page 20-118)
     Center console (see page 20-89)
   - Driver's dashboard undercover (see page 20-100)
   - Passenger's dashboard undercover (see page 20-105)
   - Steering column (see page 17-25)
   - Glove box (see page 20-105)
   - A-pillar trim, both sides (see page 20-69)
   - Kick panel, both sides (see page 20-67)
   - Front console cover, both sides (see page 20-102)
   - Dashboard center lower cover (see page 20-95)
   - Shift lever (see page 14-272)

Driver's side

4. From under dash, disconnect the left side wire harness connectors (A), engine compartment wire harness connectors (B), interior wire harness connector (C), and driver's door wire harness connectors (D).

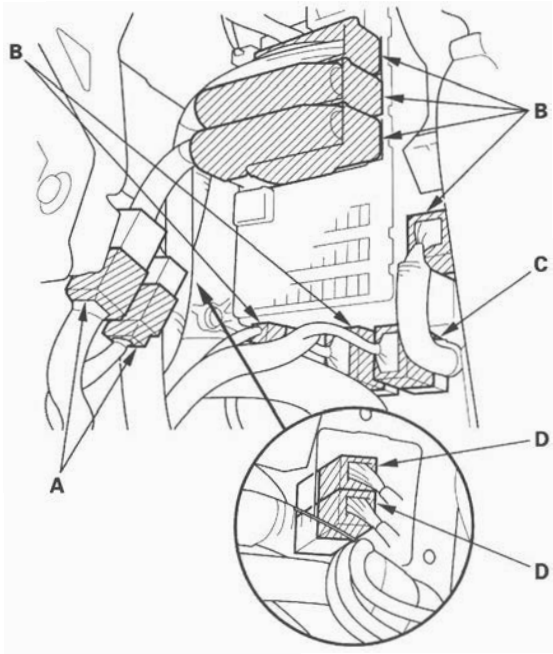

Center

5. Remove the rear heater joint (A).

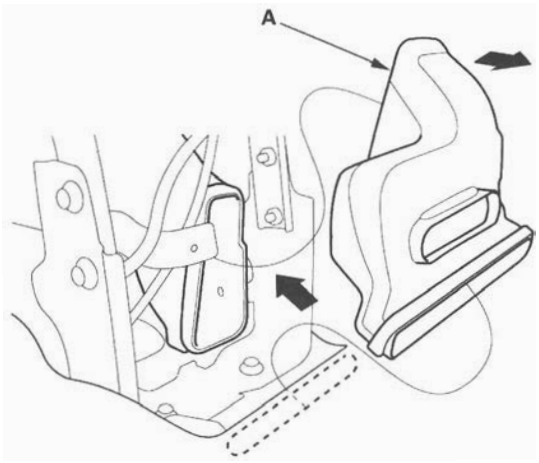

(cont'd)

Dashboard/Steering Hanger Beam Removal/Installation (cont'd)

6. From under dash, disconnect SRS control unit connector (A), floor harness connectors (B), and A/C subharness connector (C). Using a T30 TORX bit, remove the ground bolt (D), and release the wire harness clips (E).

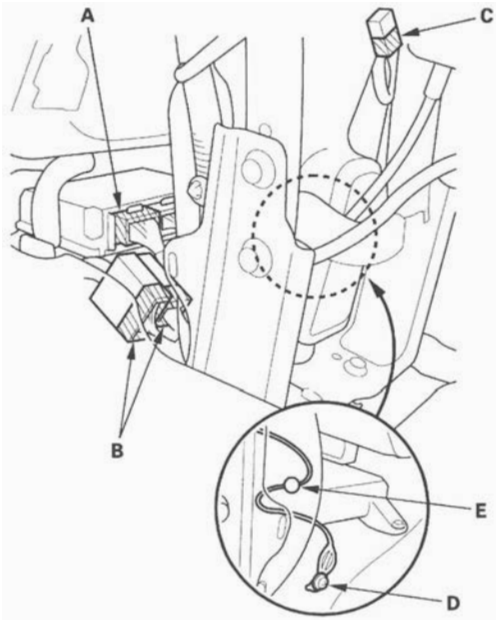

Passenger's side

7. From under the dash, disconnect the radio tuner connectors (A), antenna connector (B), and right side wire harness connectors (C).

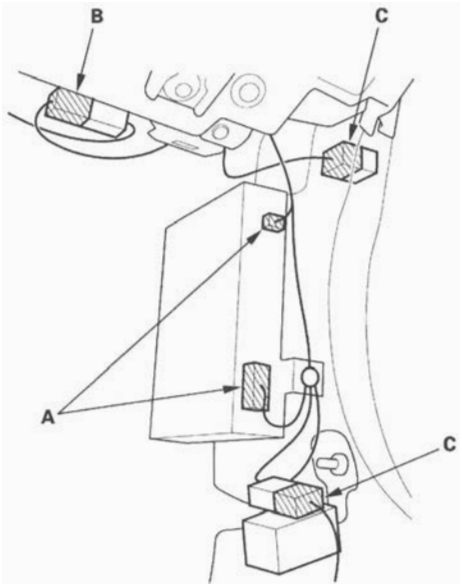

8. Remove the bolts, and remove the center bracket (A) from the dashboard center frame (B).

Fastener Locations

▶ : Bolt, 4

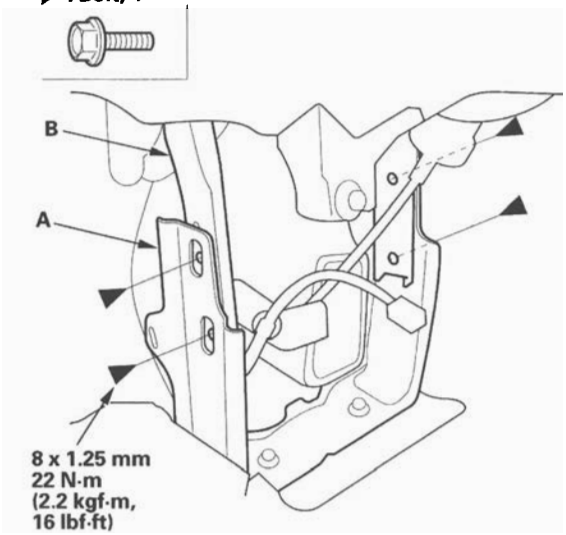

9. From the driver's side: Remove the bolt from brake pedal bracket, and remove the nut from the body.

Fastener Locations

● : Nut, 1 ▶ : Bolt, 1

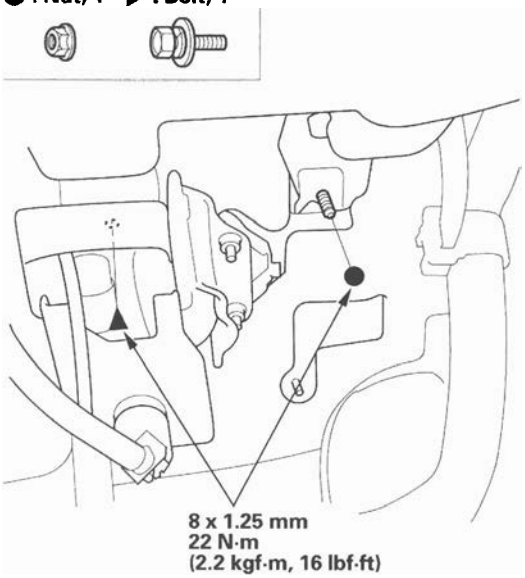

10. Remove the special bolts (A) from outside the passenger's door.

-1 Loosen the special bolt until its threads have come off the side bracket (B) of the steering hanger beam. The bolt will be screwed into the inside threads of the collar bolt (C) by loosening the bolt. Because of the thread locks on the thread of the bolt, the bolt and collar bolt will be fixed.

-2 Loosen the bolt again to screw the collar bolt in to the fixed space adjuster (D) until it is stopped by the stopper (E). This will provide a gap (F) between the collar bolt and body.

-3 Remove the bolt.

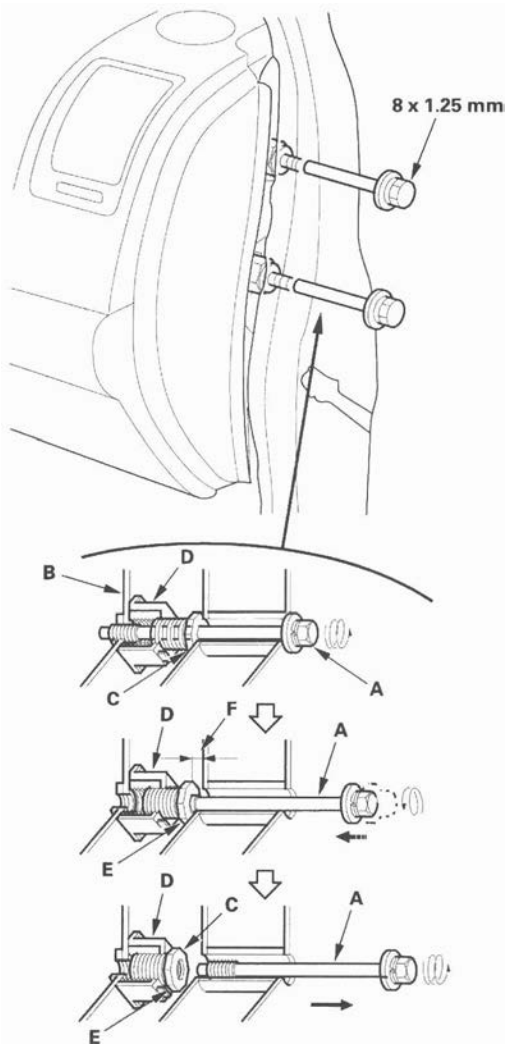

(cont'd)

Dashboard/Steering Hanger Beam Removal/Installation (cont'd)

11. If necessary, remove the dashboard side cover (A).

    -1 Using a KTC trim tool, pry up on the front edge of the dashboard side cover to release the clips and hooks (B).
    -2 Pull out the cover to release the hooks (C), then remove the cover. Repeat on the other side of the dashboard.

Fastener Locations
▷ : Clip, 3

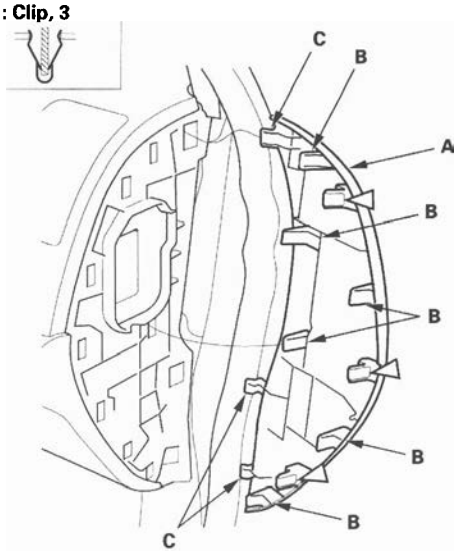

12. If the adjusting nuts (A) are not screwed fully into the sleeve when removing the special bolts, screw externally threaded nuts into the sleeve with a 21 mm open-end wrench. In this case, the special bolt should be replaced with a new one because its thread locks were worn out.

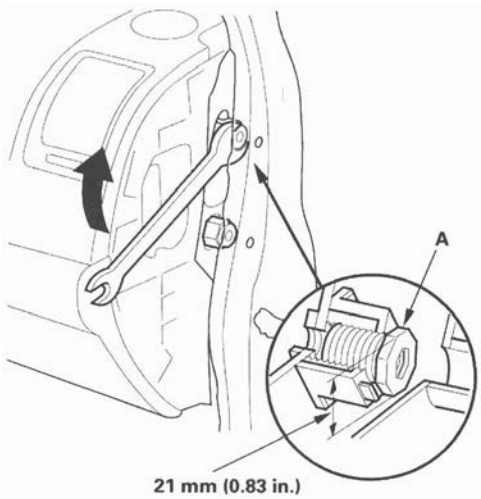

13. Remove the bolts (A, B) from outside the driver's door.

Fastener Locations
A ▶ : Bolt, 1 B ▶ : Bolt, 2



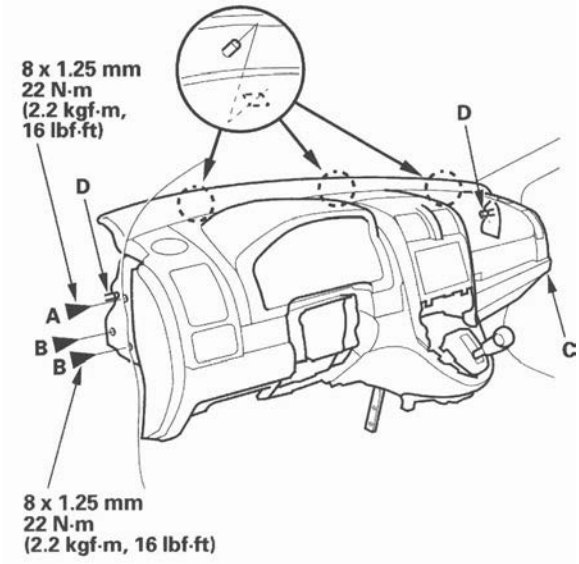

14. Lift up on the dashboard (C) to release it from the guide pins (D).

15. Have an assistant hold the dashboard away from the body, open the driver's door fully. Carefully remove the dashboard through the driver's door opening. Take care not to scratch the body with the collar bolt.

    NOTE:
    - Do not rest the dashboard on its lower center console opening, or it may be damaged. Lay it on its front or back.
    - Push the forward bolt on the passenger's side into the body to prevent the bolt and/or the passenger's door from getting damaged.

16. Install the dashboard in the reverse order of removal, and note these items:

- Before tightening the bolts, make sure the wire harnesses are not pinched.
- Make sure the connectors are plugged in properly, and the antenna lead and each cable are connected properly.
- Before reinstalling the dashboard, be sure the collar bolt (A) on passenger's side can be screwed/unscrewed lightly by hand, and then screw all of them into the fixed space adjuster (B) until they contact the stoppers (C) by hand. Do not tighten them fully with any tools.
- Before reinstalling the dashboard, try to screw the special bolt (D) into the loosened collar bolt. If the collar bolt is not unscrewed by screwing the special bolt, replace this special bolt with a new one.
- After setting the dashboard on the body, reinstall all of the mounting bolts to the dashboard, tighten the driver's side bracket to the specified torque, then torque the special bolt (A) on the passenger's side.
  First screw the special bolt into the collar bolt nut (B), they will be fixed because of the thread lock on the bolt. Go on tightening the bolt with the collar bolt, they are loosened from the fixed space adjuster (C) until the coolar bolt contacts the inside face of the body. Then tighten the bolts again to the specified torque.
- Apply medium strength type liquid thread lock to the bolts securing the center bracket and the dashboard before reinstallation.
- Reconnect the negative cable to the battery.
- Enter the anti-theft code for the audio and the navigation system (if equipped), then enter the XM audio presets (if equipped).
- Set the clock (without navigation system).
- Check for any DTCs that may have been set during repairs, and clear them.

Special bolt tightening on passenger's side

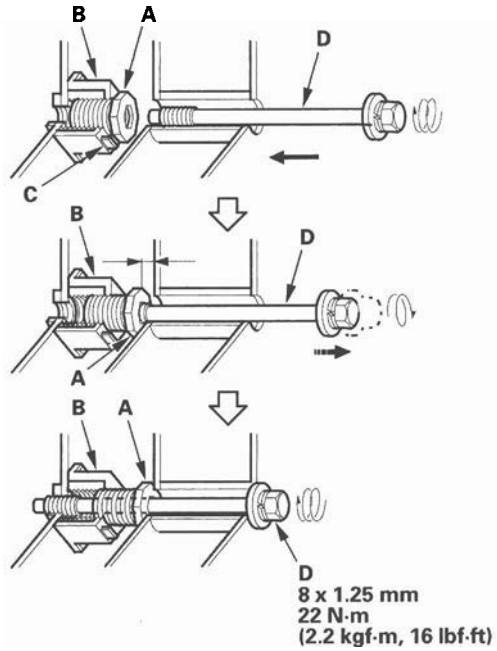

Dashboard Replacement

Special Tools Required
KTC trim tool set SOJATP2014 *
* Available through the American Honda Tool and Equipment Program; call 888-424-6857

NOTE:
- Have an assistant help you when removing and installing the dashboard.
- Put on gloves to protect your hands.
- Use the appropriate tool from the KTC trim tool set to avoid damage when prying components.
- Take care not to scratch the dashboard and related parts.

1. Remove these items:

   - Center upper dashboard panel (see page 20-93)
   - Driver's vent panel (see page 20-98)
   - Dashboard center vent (see page 20-93)
   - Passenger's vent panel (see page 20-104)
   - Passenger's airbag (see page 24-162)
   - Glove box (see page 20-105)
   - Instrument panel (see page 20-97)
   - Gauge control module (see page 22-248)
   - Navigation unit, with navigation system (see page 23-140)
   - Audio unit, without navigation system (see page 23-76)

Driver's side

2. Remove the screws, then remove the GPS antenna (A), then pull the antenna out through the hole in the dashboard.

Fastener Locations
▶ : Screw, 2

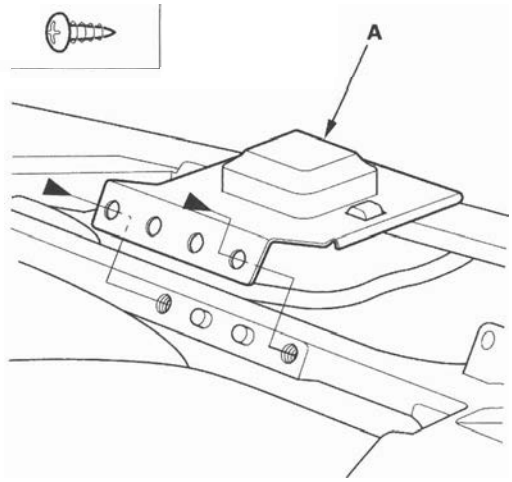

Center

3. Detach the wire harness clips (A) from the shift lever panel opening.

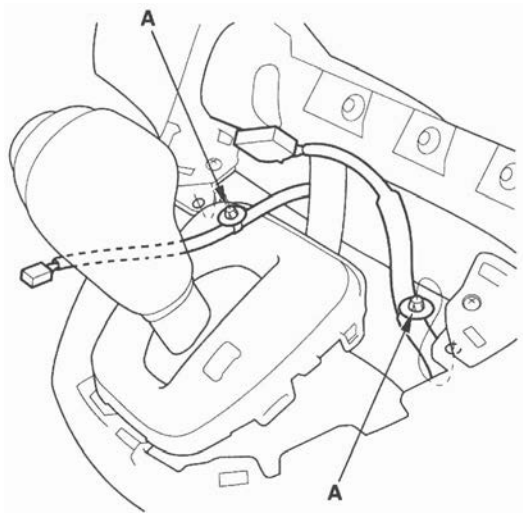

4. From the back of the dashboard, disconnect the tweeter connectors (A), then detach the wire harness clips (B).

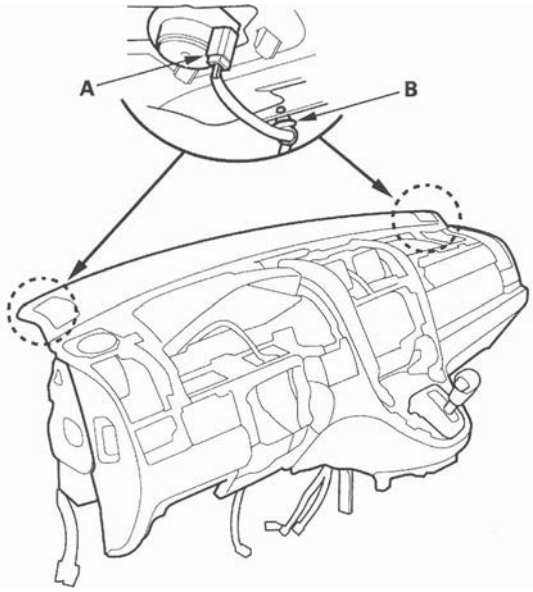

Passenger's side

5. Carefully pry the glove box light (A) from the inside of the dashboard, and detach the wire harness clips (B).

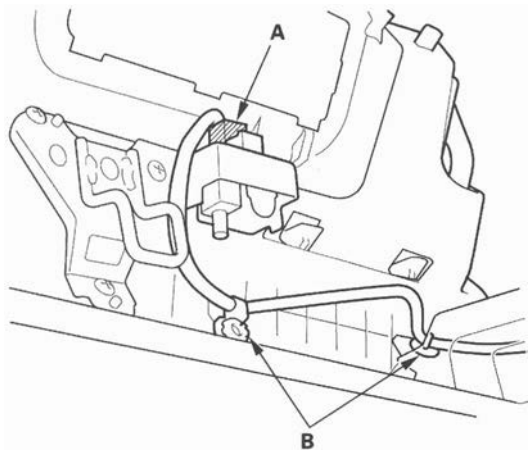

6. From the back of the dashboard, remove the screws, and center joint duct (A).

Fastener Locations
▶ : Screw, 3

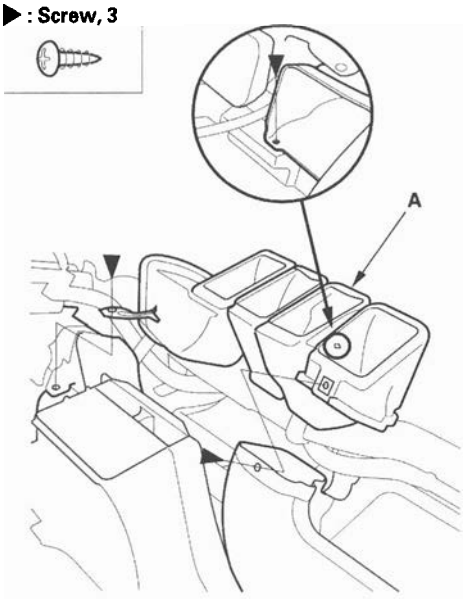

7. From the front of the dashboard (A), remove the screws.

Fastener Locations
▶ : Screw, 14

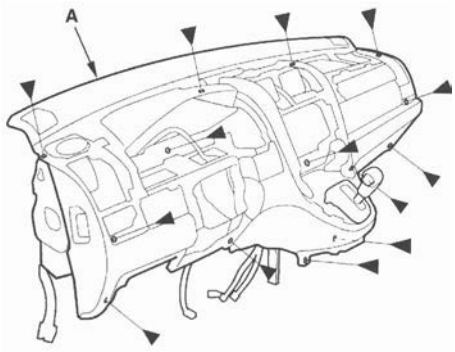

8. Assemble the dashboard and steering hanger beam in the reverse order of removal, and note these items:

NOTE:
- Make sure the dashboard wire harness is not pinched.
- Make sure the connectors are plugged in properly.

Component Location Index

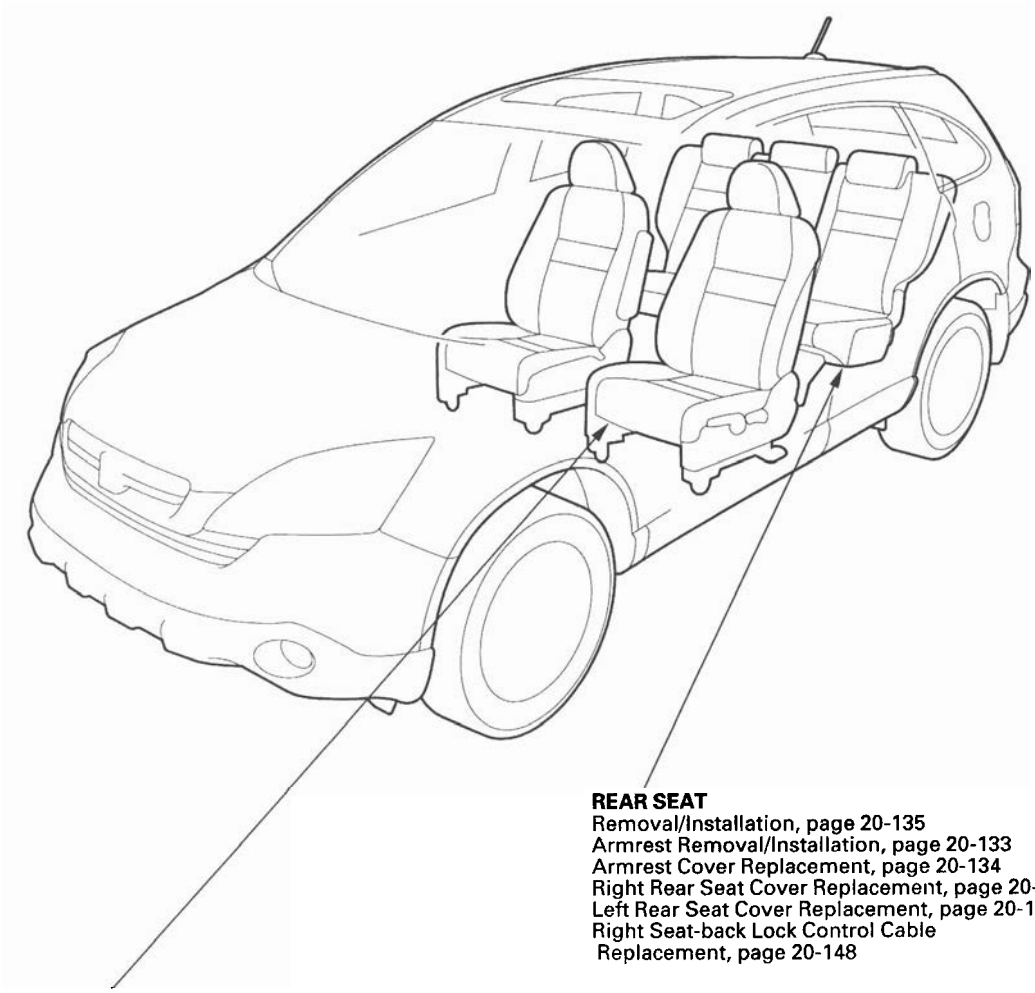

REAR SEAT
Removal/Installation, page 20-135
Armrest Removal/Installation, page 20-133
Armrest Cover Replacement, page 20-134
Right Rear Seat Cover Replacement, page 20-136
Left Rear Seat Cover Replacement, page 20-143
Right Seat-back Lock Control Cable Replacement, page 20-148

FRONT SEAT
Front Seat Active Head Restraint Inspection, page 20-117
Removal/Installation, page 20-118
Seat Frame Replacement, page 20-122
Recline Cover Removal/Installation, page 20-129
Seat-back Cover/Pad Replacement, page 20-125
Seat Cushion Cover/Pad Replacement, page 20-130
Center Table Replacement, page 20-120
Armrest Removal/Installation, page 20-121
Under Tray Replacement, page 20-128

Front Seat Active Head Restraint Inspection

NOTE: If the vehicle has been in a collision, always inspect the active head restraints, even if they appear reusable, by doing the following procedure.

Resetting Head Restraint Position

1. Push the head restraint (A) forward fully from the locked position to return the inside inertia lock (B).

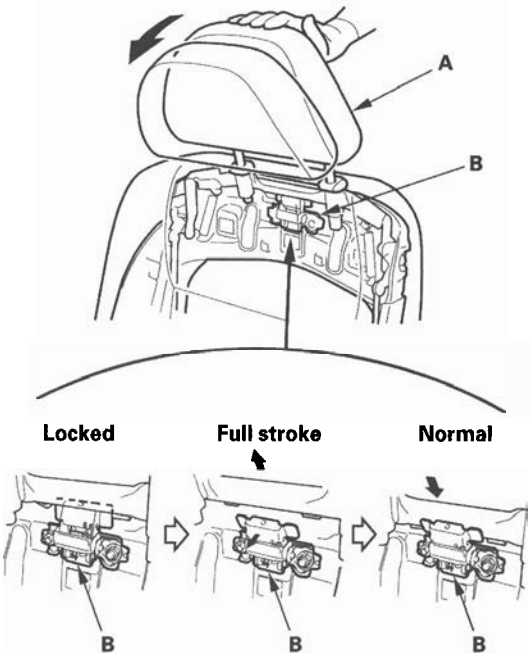

2. Slowly raise the head restraint into the normal position.

Inspection

3. Fold the seat-back forward, then recline the seat-back to the first lock position, and adjust the head restraint to the head restraint position.

4. Apply masking tape on the top of the head restraint.

5. Make marks (A) on both sides at 250 mm (9.84 in.) upward from the posts of the head restraint frame (B) along the back of the head restraint (C) surface. Make a center of these points as a datum point (D).

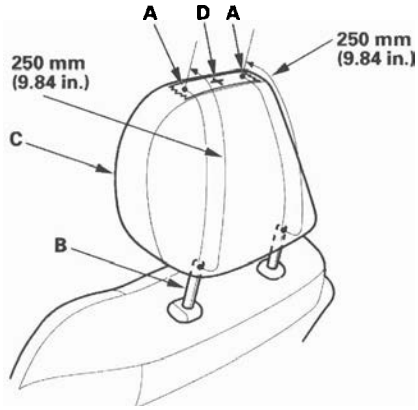

6. Push the head restraint (A) forward, and check: With a ruler, measure the level amount of the head restraint movement. The head restraint should move more than 50 mm (2.0 in.) without resistance. If it is less than 50 mm (2.0 in.), or the head restraint doesn't move smoothly, replace the seat-back frame assembly:

   - Passenger's seat (see page 20-122)
   - Driver's seat (see page 20-124)

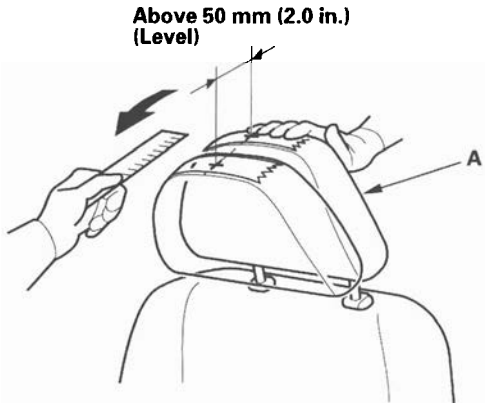

Front Seat Removal/Installation

Special Tools Required
KTC trim tool set SOJATP2014 *
* Available through the American Honda Tool and Equipment Program; call 888-424-6857

SRS components are located in this area. Review the SRS component locations (see page 24-13) and the precautions and procedures (see page 24-15) before doing repairs or service.

NOTE:
- Put on gloves to protect your hands.
- When prying with a flat-tip screwdriver, wrap it with protective tape to prevent damage.
- Take care not to scratch the body or tear the seat covers.
- Use the appropriate tool from the KTC trim tool set to avoid damage when prying components.

1. Make sure you have the anti-theft code for the audio and the navigation system (if equipped), then write down the XM audio presets (if equipped).

2. Disconnect the negative cable from the battery, and wait at least 3 minutes before beginning work.

3. Passenger's seat: Remove the front seat under tray (for some models) (see page 20-128).

4. Tilt the steering wheel all the way up, and telescope it all the way in.

5. Slide the front seat forward fully, carefully pry up on the bottom edge of the anchor cover (A) to release the hooks, and remove the cover.

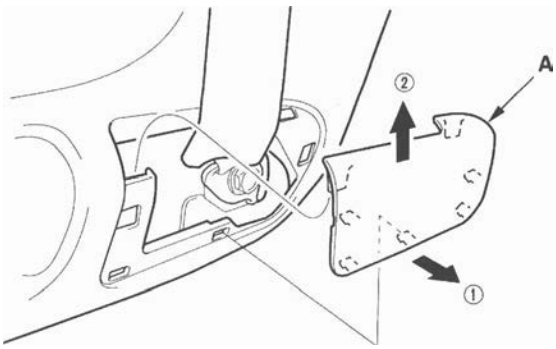

6. Remove the lower anchor bolt (A).

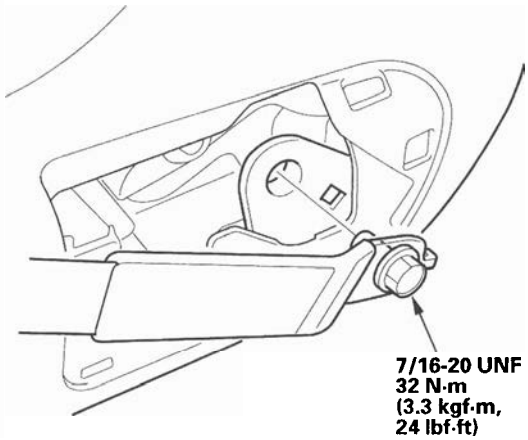

7. Remove the rear inner seat track end covers (A) and rear outer seat track end covers (B) from the rear of both seat tracks.

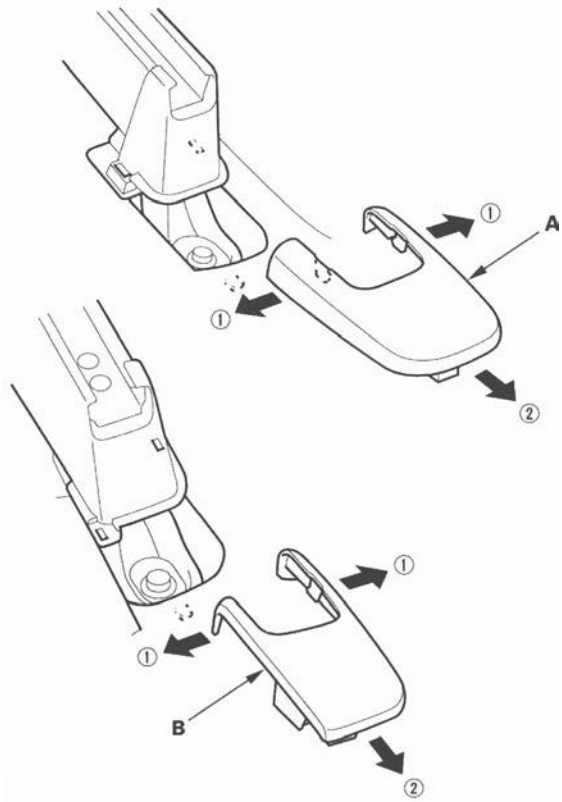

8. Remove the bolts.

Fastener Locations

▶ : Bolt, 2



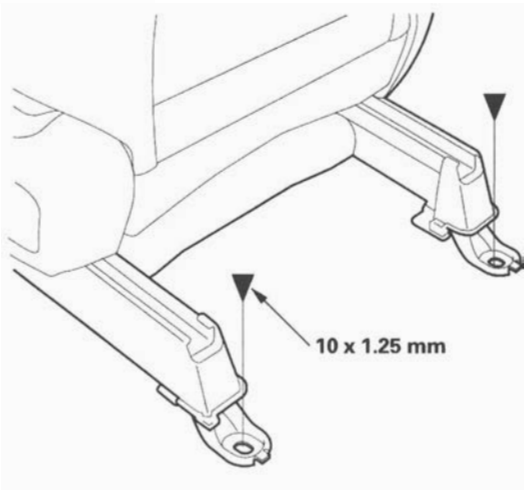

9. Slide the front seat rearward fully, and remove the bolts.

Fastener Locations

▶ : Bolt, 2

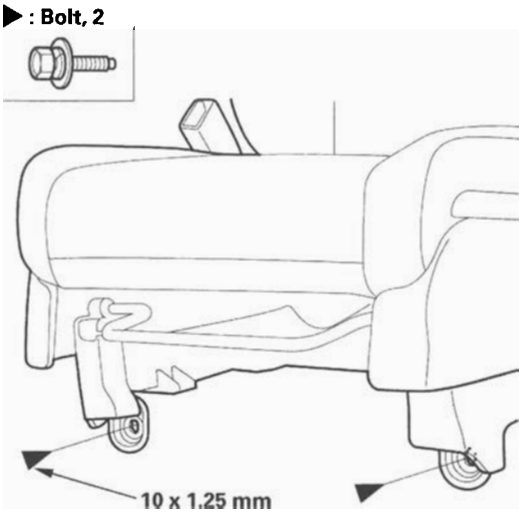

10. Lift up the front seat, then detach the harness clips, and disconnect the side airbag connector (A), seat belt switch connector (B), seat belt buckle tensioner connector (C), and seat subharness connector (D) on the driver's seat.
On passenger's seat, disconnect the woofer connector (E) (for some models).

Passenger's seat

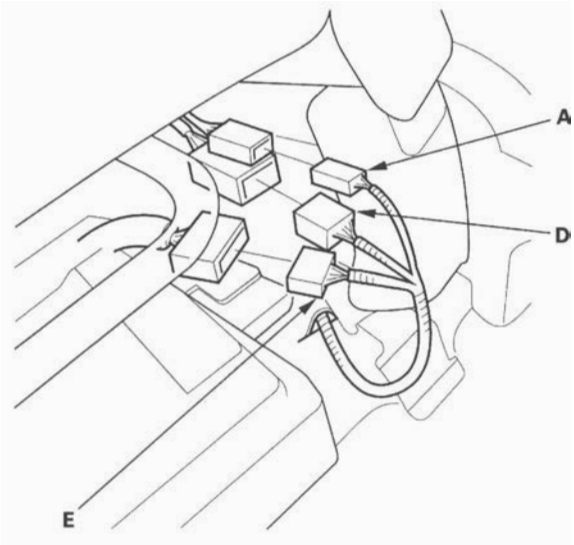

Driver's seat

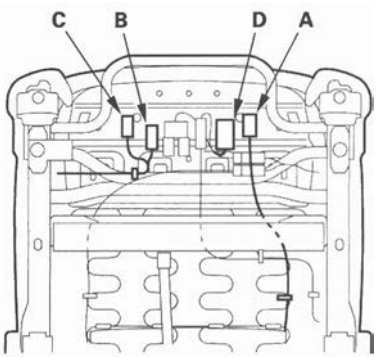

(cont'd)

Front Seat Removal/Installation (cont'd)

11. With the help of an assistant, carefully remove the front seat through the front door opening.

12. Install the seat in the reverse order of removal, and note these items:

- Apply medium strength type liquid thread lock to the seat mounting bolts before reinstallation.
- Tighten the seat mounting bolts to the specified torque in the sequence shown. Slide the seat all the way back and tighten ① and ②, then slide it forward and tighten ③ and ④. The driver's seat is shown the passenger's seat is similar.
- Tighten the bolts by hand first, then tighten them to specification with a torque wrench.
- Make sure each connector is plugged in properly.
- Reconnect the negative cable to the battery.
- Before installing the anchor bolts, make sure there are no twists or kinks in the seat belt.
- Enter the anti-theft code for the audio and the navigation system (if equipped), then enter the XM audio presets (if equipped).
- Set the clock (without navigation system).
- Check for any DTCs that may have been set during repairs, and clear them.

Fastener Locations

▶ : Bolt, 4

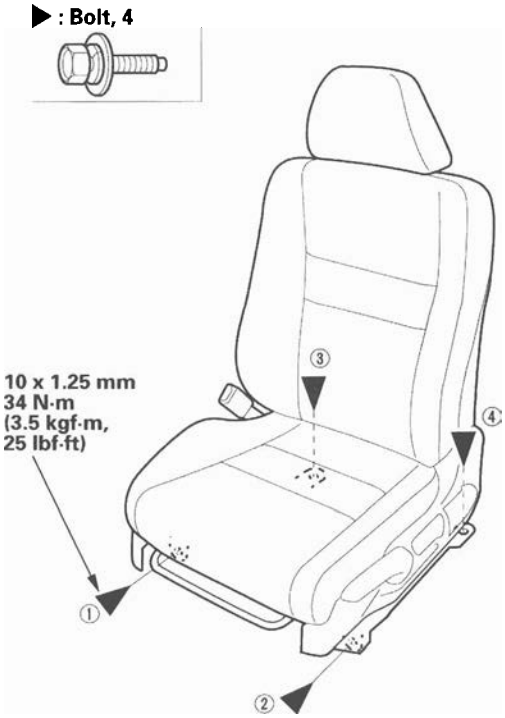

Front Seat Center Table Replacement

Special Tools Required

KTC trim tool set SOJATP2014 *

* Available through the American Honda Tool and Equipment Program; call 888-424-6857

NOTE:

- Put on gloves to protect your hands.
- When prying with a flat-tip screwdriver, wrap it with protective tape to prevent damage.
- Take care not to scratch the body or tear the seat covers.
- Use the appropriate tool from the KTC trim tool set to avoid damage when prying components.

1. Set up the table.

2. Remove the clip and pull the outer cover (A) back to detach the hook (B), then remove it.

Fastener Location

▷ : Clip, 1

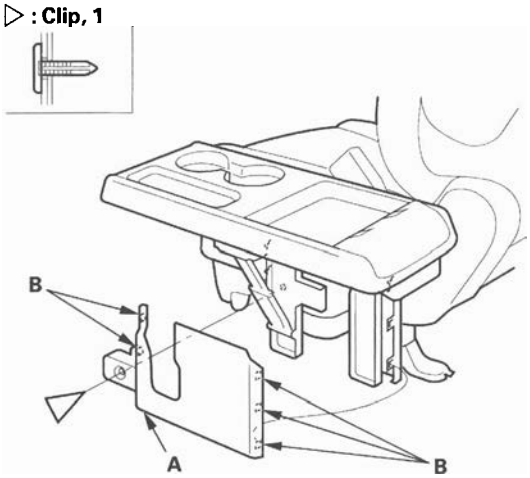

3. For some models: Disconnect the center table cord connector (A), and release the harness clip (B) from the passenger's seat. Remove the nuts, then remove the center table (C).

Fastener Locations

● : Nut, 2

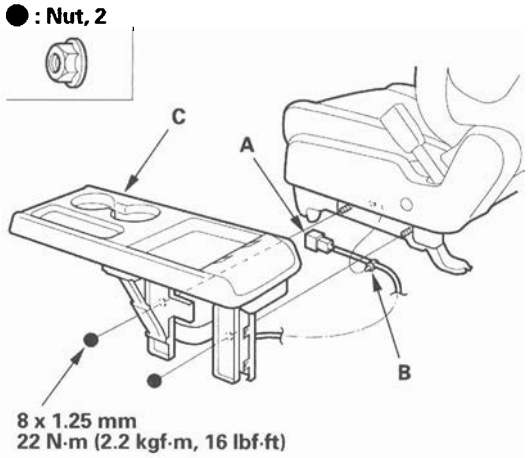

4. Install the table in the reverse order of removal, and note these items:

   - Check if the clip is damaged or stress-whitened, and if necessary, replace it with a new one.
   - Push the clip and hooks into place securely.
   - Make sure the center table cord connector is plugged in properly, if equipped.

Front Seat Armrest Replacement

Special Tools Required

KTC trim tool set SOJATP2014 *

* Available through the American Honda Tool and Equipment Program; call 888-424-6857

NOTE:

- Take care not to scratch the body or tear the seat covers.
- Use the appropriate tool from the KTC trim tool set to avoid damage when prying components.

1. Using a trim tool, remove the cap (A).

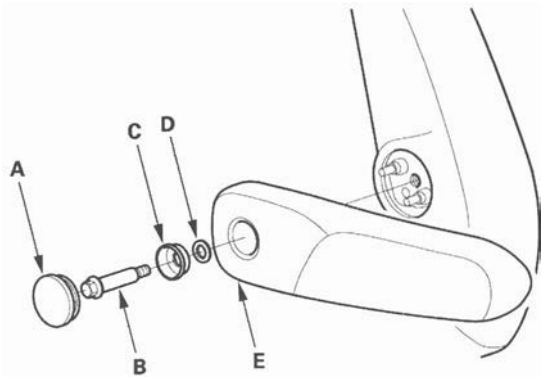

2. Remove the center pin (B), bushing (C), and washer (D), then remove the armrest (E).

3. If necessary, remove the pins (A) from the seatback.

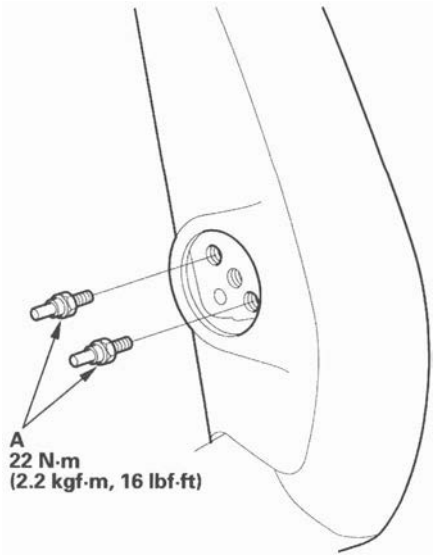

Front Seat Frame Replacement

Passenger's Seat

Calibrate the ODS unit after any of the these actions (see page 24-29):

- Front passenger's seat replacement (including any seat components)
- Replacement of the seat weight sensors
- After a vehicle collision

NOTE:
- Put on gloves to protect your hands.
- Apply oil to the pivot portions of the slide locks.
- Apply multipurpose grease to the sliding portions of the seat tracks.
- If the side airbag has deployed, replace the seat frame and related parts with new ones.

1. Remove the front seat (see page 20-118).

2. Remove these items:

   - Front seat-back cover/pad (see page 20-125)
   - Front seat cushion cover/pad (see page 20-130)
   - ODS unit (see page 24-181)

3. Gently pull out the outer riser cover (A) and inner riser cover (B) by releasing the clips.

Fastener Locations

▷ : **Clip, 4**

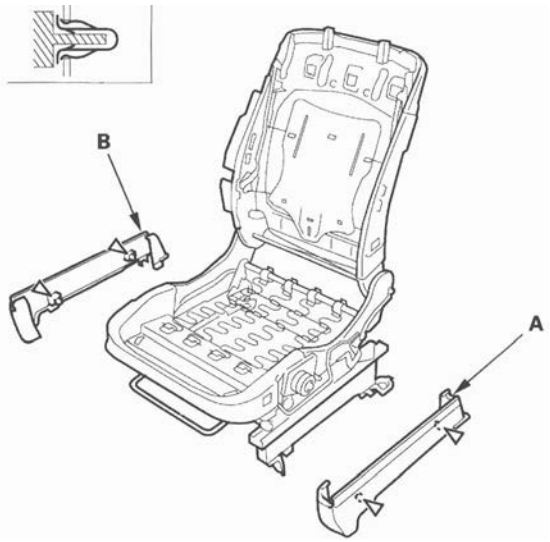

4. Remove the clips, then remove the recline inner covers (A) from the seat frame (B), and remove the module holder (C).

Fastener Locations

▷ : **Clip, 4**

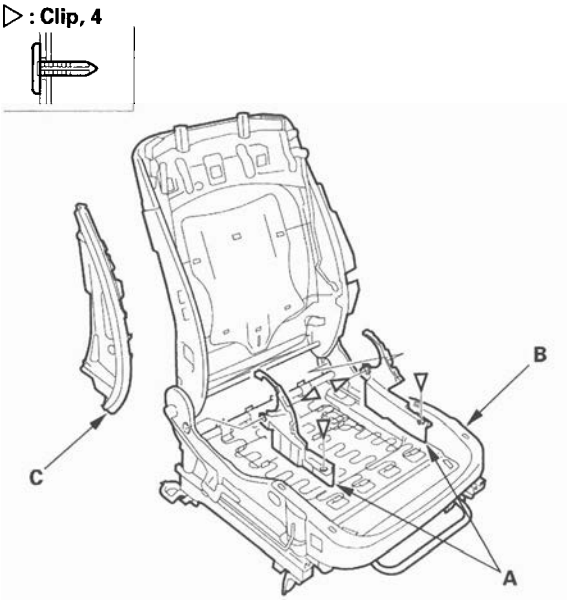

5. Detach the harness clips (A), and remove the seat subharness (B) from the seat cushion frame (C).

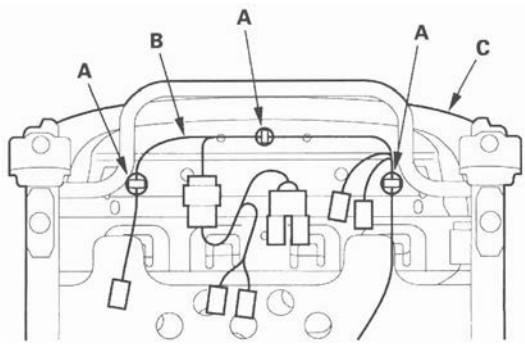

6. Remove the bolts, and release the seat cushion springs (A) from the hooks (B), then remove the seat cushion frame (C).

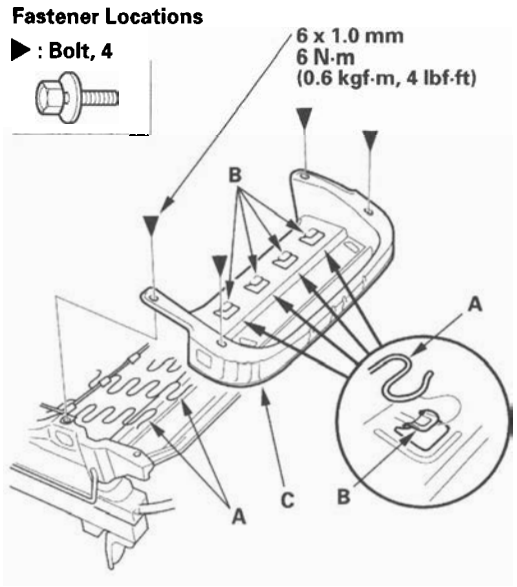

7. Remove the seat weight sensor (see page 24-179).

8. If necessary, remove the bushings (A, B) from the seat cushion frame (C).

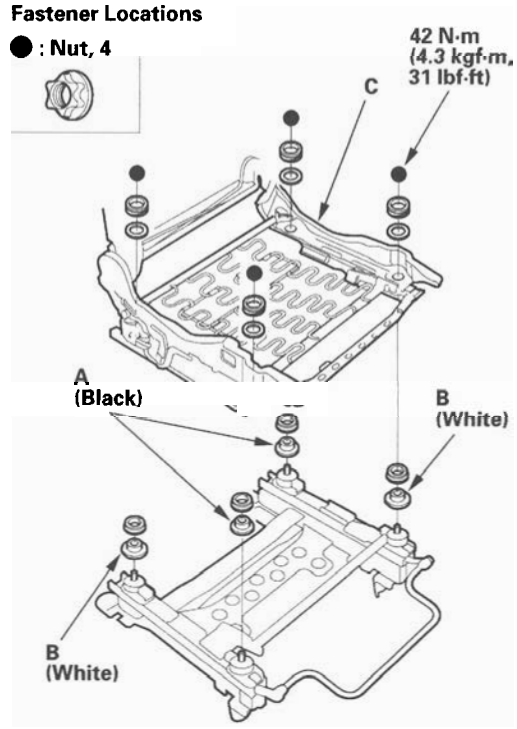

9. If necessary, remove the member cover (A) from the front cushion rear member (B).

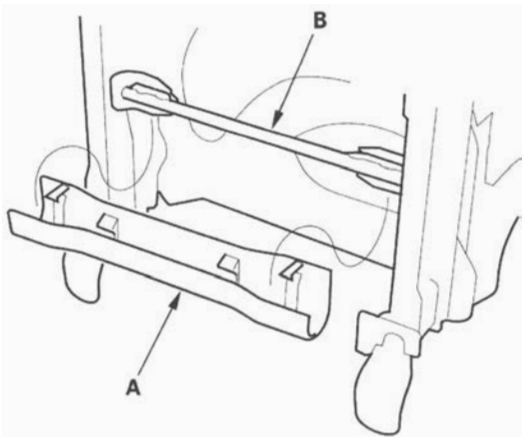

10. Install the new seat frame in the reverse order of removal, and note these items:

- Make sure the ODS unit connector is plugged in properly.
- Check if the clips are damaged or stress-whitened, and if necessary, replace them with new ones.
- Push the clips into place securely.

Front Seat Frame Replacement (cont'd)

Driver's Seat

Calibrate the ODS unit after any of the these actions (see page 24-29):

- Front driver's seat replacement (including any seat components)
- After a vehicle collision

NOTE:
- Put on gloves to protect your hands.
- Apply oil to the pivot portions of the slide locks.
- Apply multipurpose grease to the sliding portions of the seat tracks.
- If the side airbag has deployed, replace the seat frame and related parts with new ones.

1. Remove the front seat (see page 20-118).

2. Remove these items:

   - Front seat-back cover/pad (see page 20-125)
   - Front seat cushion cover/pad (see page 20-130)
   - Seat position sensor (see page 24-183)

3. Remove the clips, then remove the recline inner covers (A), outer upper rail cover (B), inner upper rail cover (C), and the module holder (D) from the seat frame (E).

Fastener Locations

▷ : Clip, 3

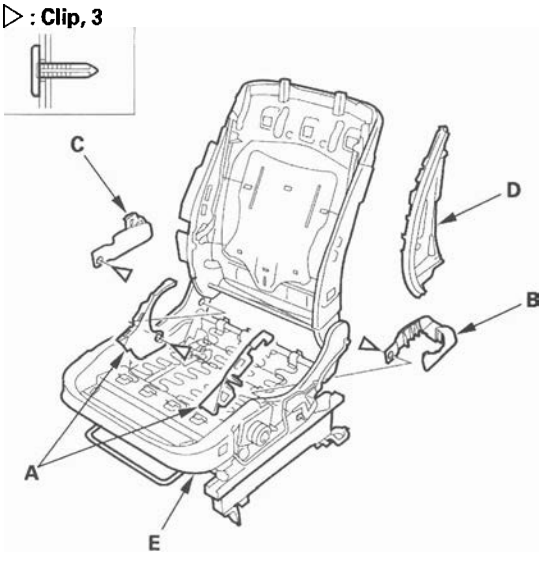

4. Install the new seat frame in the reverse order of removal, and note these items:

   - Make sure the ODS unit connector is plugged in properly.
   - Check if the clips are damaged or stress-whitened, and if necessary, replace them with new ones.
   - Push the clips into place securely.

Front Seat-back Cover/Pad Replacement

SRS components are located in this area. Review the SRS component locations (see page 24-13) and the precautions and procedures (see page 24-15) before doing repairs or service.

- Check the operation of the driver's seat position sensor after any of these actions (see page 24-31):
  - Driver's seat position sensor replacement
  - Cover plate (front side of driver's seat slide rail) replacement
- Calibrate the ODS unit after any of the these actions (see page 24-29):
  - Front passenger's seat replacement (including any seat components)
  - Replacement of the seat weight sensors
  - After a vehicle collision

NOTE:
- Take care not to tear the seams or damage the seat covers.
- On the passenger's seat, do not touch the ODS sensor in the seat-back pad, and keep it away from oil. Oil can corrode the sensor causing it to fail.
- Put on gloves to protect your hands.

1. Remove the front seat (see page 20-118).

2. Passenger's seat: Remove the front seat under tray (see page 20-128).

3. Remove the armrest (see page 20-121).

4. Remove the head restraint.

5. From under the seat cushion, detach the side airbag connector clip (A) and seat heater connector clip (driver's seat) (B), then remove the wire harness ties (C).

Passenger's seat

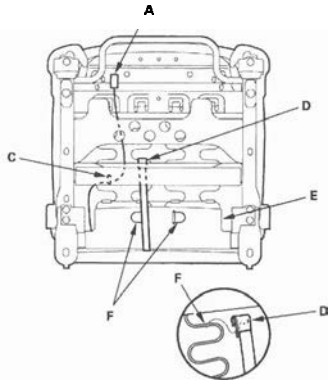

Driver's seat

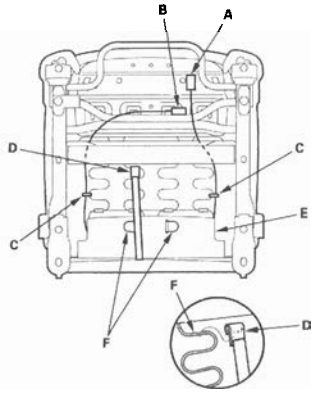

6. Release the hook (D) and the slit in the seat cushion cover (E) from the seat cushion frame spring (F), then pull the cover back.

7. Using the appropriate trim tool, pry out the clips (A) to release the lower portion of the back cover.

Fastener Locations

A ▷: Clip, 2

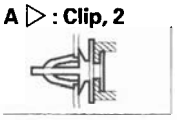

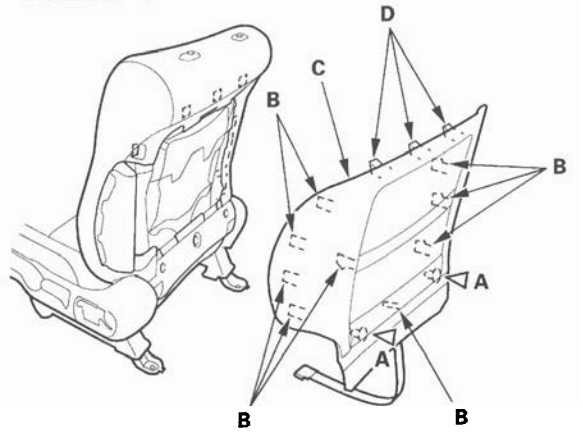

8. Detach the clips and hooks (B) by pulling the bottom of the back cover (C) back, then gently pull down the cover to release the hooks (D) from the seat frame, and remove the panel.

(cont'd)

Front Seat-back Cover/Pad Replacement (cont'd)

9. Release the Velcro fasteners (A, B, C), and release the hooks (D), then pull the seat-back cover (E) back.

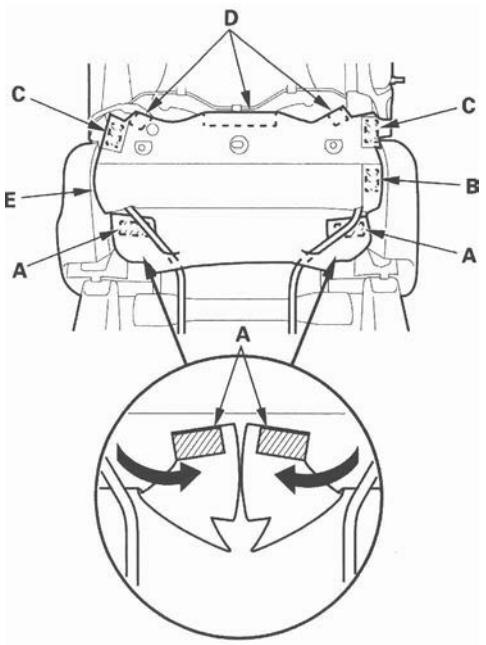

10. Pull the side airbag harness (A) out through the harness hole (B) in the seat-back cover and seat frame. Driver's seat is shown; passenger's seat is similar.

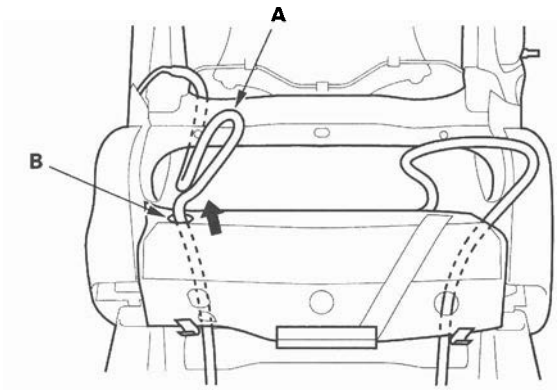

11. Remove the side airbag (see page 24-164).

12. Release the hook strips (A), then loosen the seat-back cover (B). Driver's seat is shown; passenger's seat is similar.

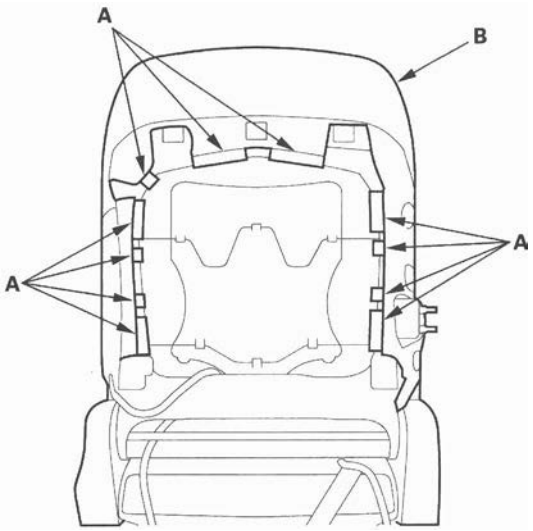

13. Turn over the reinforcing cloth (A), then release the hooks (B) from the module holder (C).

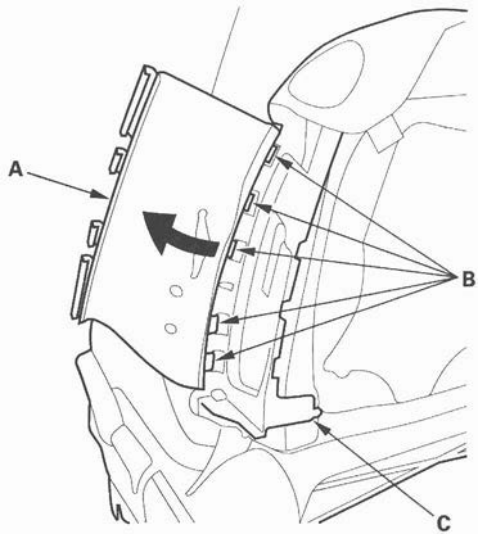

14. Passenger's seat: Disconnect the ODS sensor connectors (A) and ODS subharness connector (B) from the ODS unit (C), and pull them in through the hole in the seat frame. Detach the harness clips (D), and remove the wire tie (E).

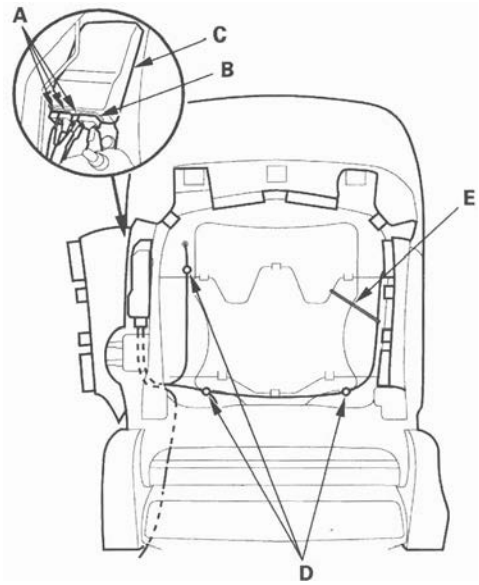

15. Pinch the tabs on the ends of the head restraint guides (A), and remove them from the seat-back.

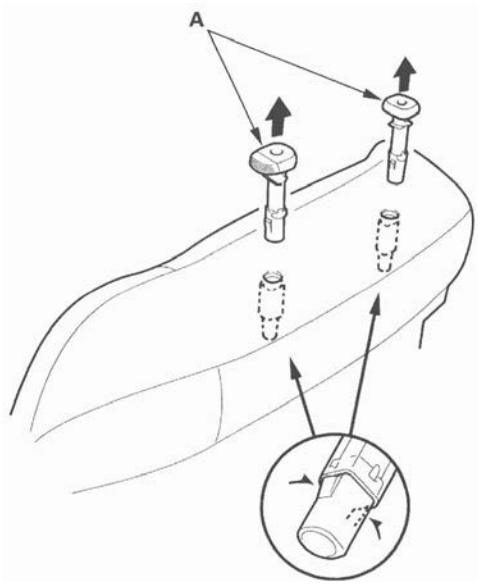

16. Remove the seat-back cover/pad (A) from the seat (B).

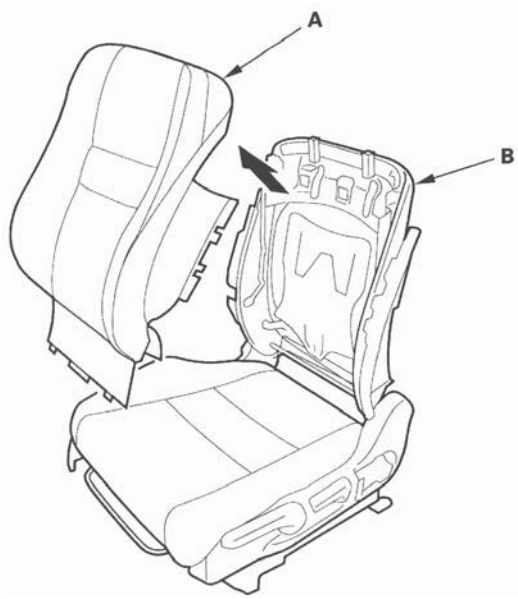

17. Pull back the edge of the seat-back cover all the way around, and release the clips (A), then remove the seat-back cover.

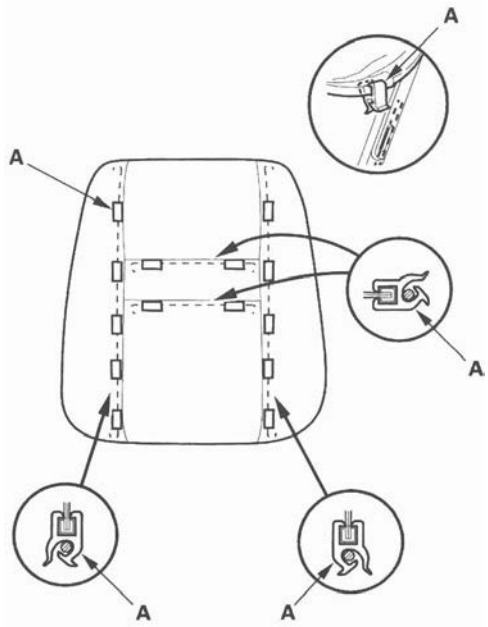

(cont'd)

Front Seat-back Cover/Pad Replacement (cont'd)

18. Install the cover in the reverse order of removal, and note these items:

    - Reinitialize the ODS unit (see page 24-28).
    - To prevent wrinkles when installing a seat-back cover, make sure the material is stretched evenly over the pad before securing the clips, hooks, and hook strips.
    - Replace any clips (A) you removed with new ones.
    - Before installing the side airbag (B), make sure the reinforcing cloth (C) is fixed on the seat-back frame (D) securely.
    - Make sure the side airbag harness and ODS subharness (passenger's seat) are routed properly.

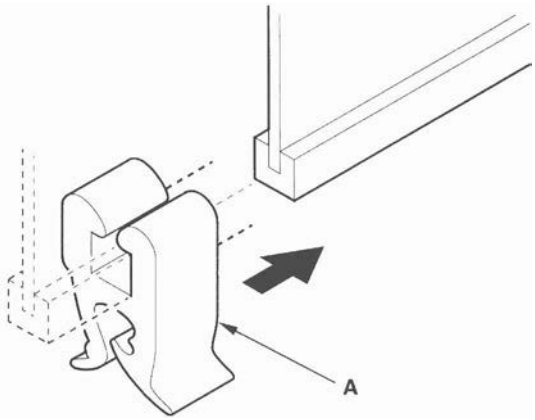

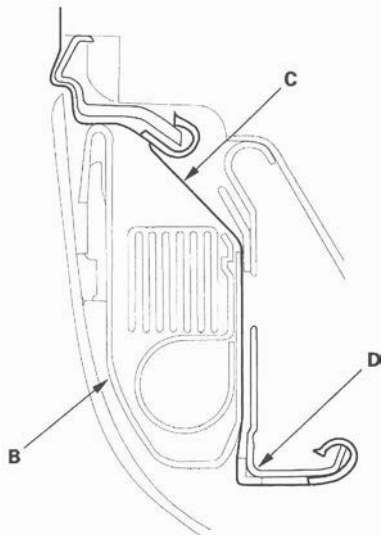

Front Seat Under Tray Replacement

1. Open the under tray (A).

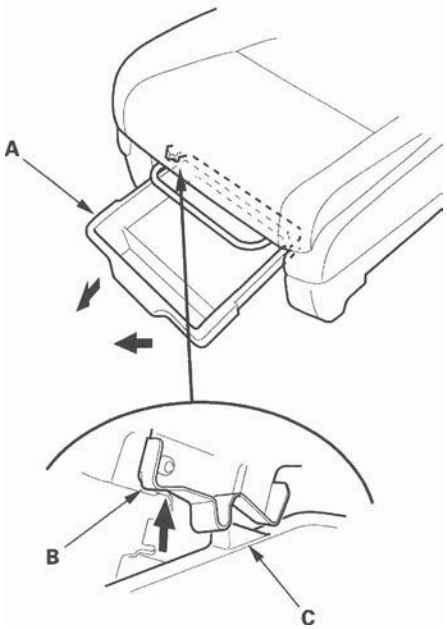

2. While pushing up on one of springs (B) on both guide rails, pull the under tray out until the stop (C) passes under the spring to remove one side of the tray from the guide rail.

3. Tilt the removed side of the under tray down, then pull another side of it off the guide rail.

4. Install the under tray by pushing it on to both guide rails until the springs snap into places.

Front Seat Recline Cover Removal/Installation

Special Tools Required
KTC trim tool set SOJATP2014 *
* Available through the American Honda Tool and Equipment Program; call 888-424-6857

SRS components are located in this area. Review the SRS component locations (see page 24-13) and the precautions and procedures (see page 24-15) before doing repairs or service.

NOTE:
- Use the appropriate tool from the KTC trim tool set to avoid damage when prying components.
- Take care not to tear the seams of damage the seat covers.
- Put on gloves to protect your hands.

1. Remove the front seat (see page 20-118).

2. Passenger's seat: Remove these items:

   - Woofer (for some models) (see page 23-80)
   - Front seat belt buckle (see page 24-6)

3. Pull back the cap (A) to release the hooks (B), and remove the screws, then remove the height adjuster handle (C).

Fastener Locations
▶ : Screw, 2

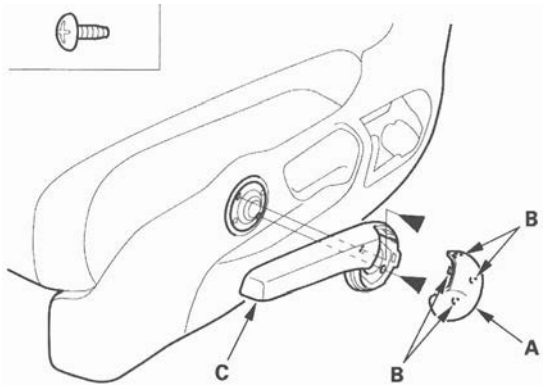

4. Remove the recline outer cover (A).

   1. Remove the recline knob (B), and remove the screw.
   2. Fold back the seat to fully.
   3. Detach the clip by pulling the outer cover back by hand.
   4. Using a trim tool, and release the hooks (C) along the upper edge of the outer cover.
   5. Gently pull out the outer cover, and remove it to the back.

Fastener Locations
▶ : Screw, 1 ▷ : Clip, 1



Passenger's seat

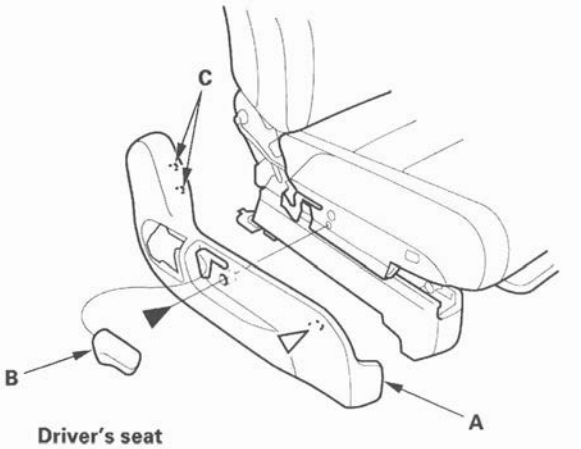

Driver's seat

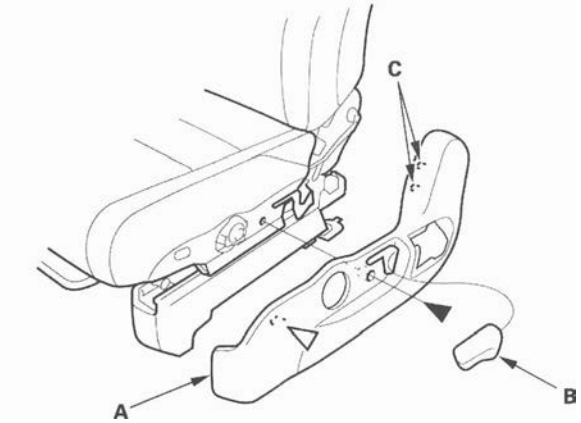

(cont'd)

Front Seat Recline Cover Removal/ Installation (cont'd)

5. Remove the recline inner cover (A).

   -1 Carefully pry up the cap (B), and remove the screw.
   -2 Fold back the seat to fully.
   -3 Detach the clips by pulling the inner cover back by hand.
   -4 Using a trim tool, release the hooks (C) along the upper edge of the inner cover.
   -5 Gently pull out the inner cover, and remove it to the back.

Fastener Locations

▶: Screw, 1 ▷: Clip, 2

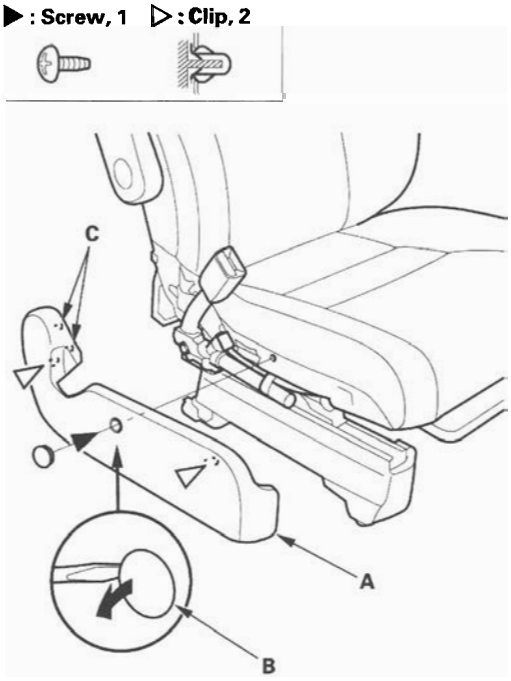

6. Install the recline covers in the reverse order of removal.

Front Seat Cushion Cover/Pad Replacement

Special Tools Required

KTC trim tool set SOJATP2014 *

* Available through the American Honda Tool and Equipment Program; call 888-424-6857

SRS components are located in this area. Review the SRS component locations (see page 24-13) and the precautions and procedures (see page 24-15) before doing repairs or service.

- Check the operation of the driver's seat position sensor after any of these actions (see page 24-31):
  – Driver's seat position sensor replacement
  – Cover plate (front side of driver's seat slide rail) replacement
- Calibrate the ODS unit after any of the these actions (see page 24-29):
  – Front passenger's seat replacement (including any seat components)
  – Replacement of the seat weight sensors
  – After a vehicle collision

NOTE:
- Use the appropriate tool from the KTC trim tool set to avoid damage when prying components.
- Take care not to tear the seams of damage the seat covers.
- Put on gloves to protect your hands.

1. Remove the front seat (see page 20-118).

2. Passenger's seat: Remove these items:

   - Front seat under tray (for some models) (see page 20-128)
   - Woofer (for some models) (see page 23-80)
   - Center table (for some models) (see page 20-120)
   - Front seat recline cover, both side (see page 20-129)
   - Front seat belt buckle (see page 24-6)

3. Detach the seat subharness clip (A), and remove the wire tie (B), then disconnect seat heater connector (C) on the front seat. Release the hook (D) from the seat cushion frame springs (E), then turn over the seat-back cover.

Passenger's seat

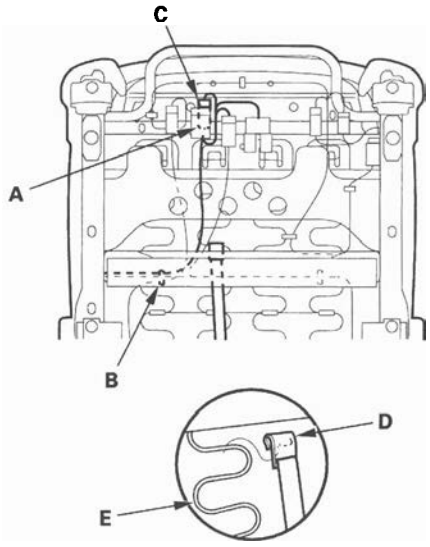

Driver's seat

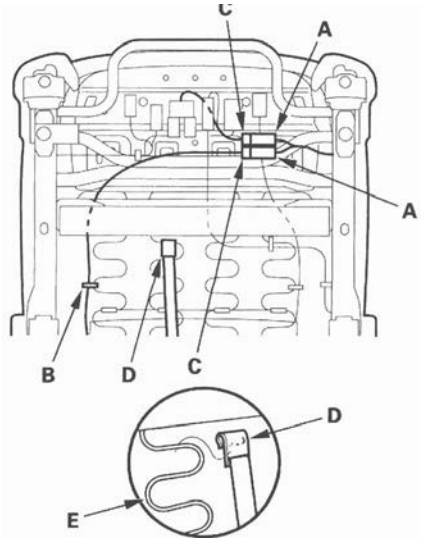

4. Release the seat cushion cover (A) from the seat cushion frame springs (B), then release the hook strips (C) from the seat frame (D).

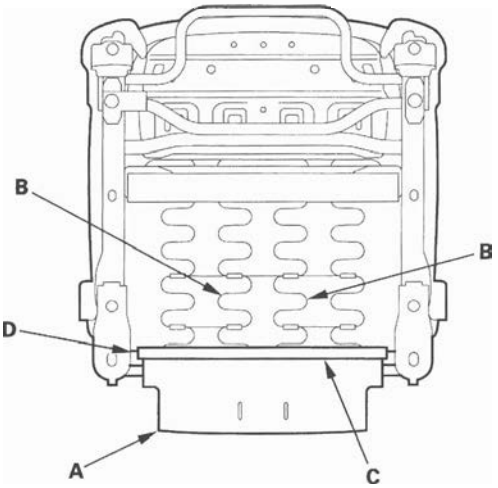

5. Remove the clip, then release the hook strips (A, B) from the seat frame (C).

Fastener Location

▷ : **Clip, 1**

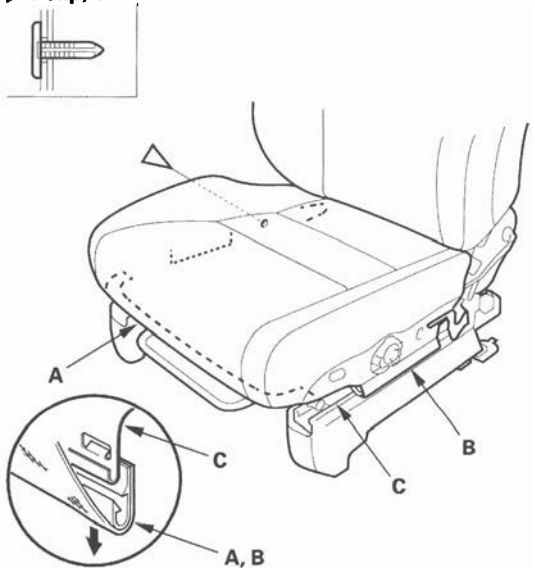

(cont'd)

Front Seat Cushion Cover/Pad Replacement (cont'd)

6. Remove the seat cushion/pad (A) from the seat frame (B).

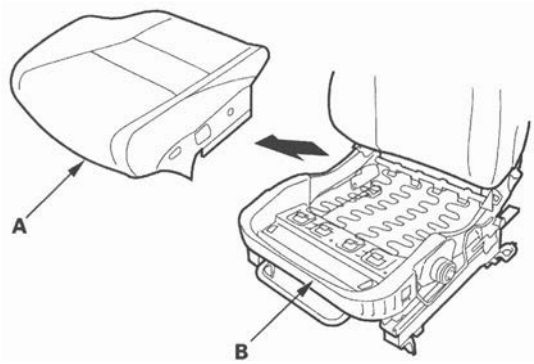

7. Release the hooks (A) from under the seat cushion (B).

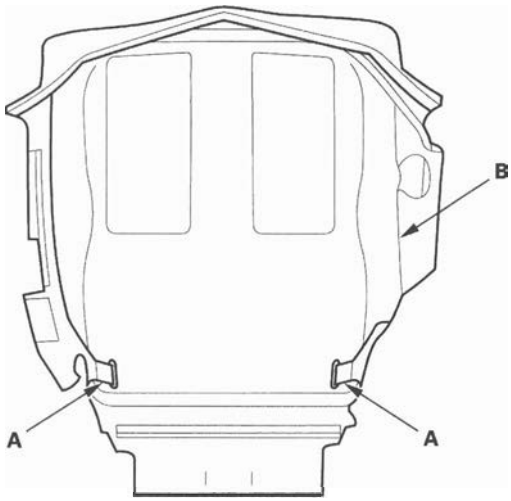

8. Pull back the edge of the seat cushion cover all the way around, and release the clips (A), then remove the seat cushion cover.

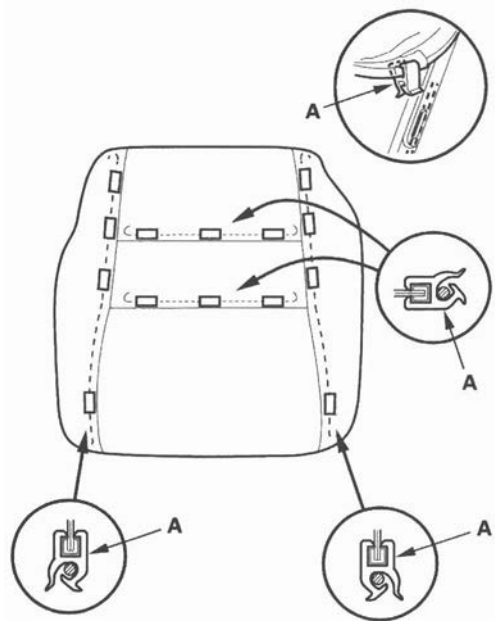

9. Install the cover in the reverse order of removal, and note these items:

   - To prevent wrinkles when installing a seat-back cover, make sure the material is stretched evenly over the pad before securing the clips, hooks, and hook strips.
   - Replace any clips (A) you removed with new ones.

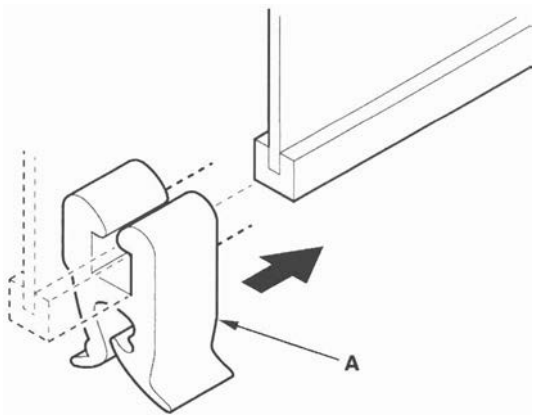

Rear Seat Armrest Removal/Installation

NOTE: Take care not to tear the sames or damage the seat covers.

1. Remove the E-ring (A) from the right side portion on the armrest pivot.

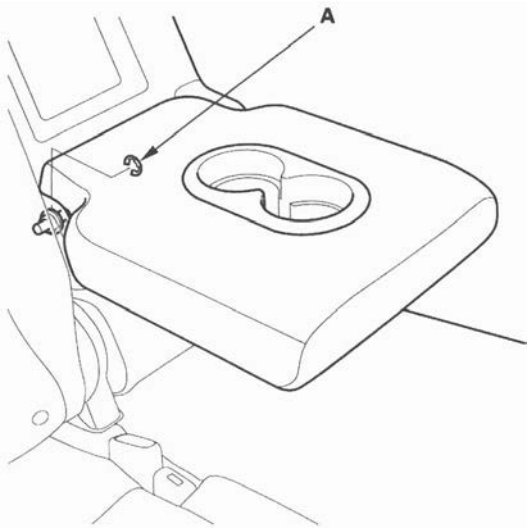

2. Slide the armrest (A) toward the right side, then release the left pivot shaft (B) from the bushing (C).

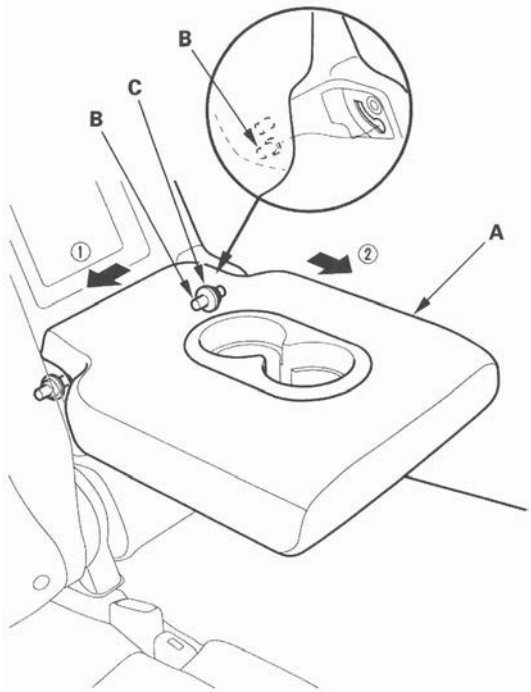

3. Release the right pivot shaft (A) from the bushing (B) by pulling the armrest back, and remove the armrest (C).

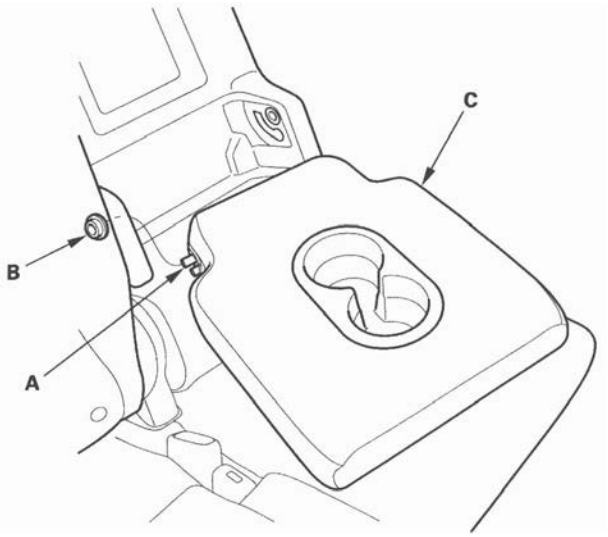

4. If necessary, remove the bushings from the frame both sides.

5. Install the armrest in the reverse order of removal.

Rear Seat Armrest Cover Replacement

Special Tools Required
KTC trim tool set SOJATP2014 *
* Available through the American Honda Tool and Equipment Program; call 888-424-6857

NOTE:
- Use the appropriate tool from the KTC trim tool set to avoid damage when prying components.
- Take care not to tear the seams or damage the seat covers.

1. Remove the armrest (see page 20-133).

2. Remove the beverage holder (A).

   -1 Using a trim tool, push on the bottom ribs (B) of the left side hooks (C) to pull up the holder, then release the hooks from the wire (D).
   -2 Release the right side hooks (E) from the wire, then remove the holder.

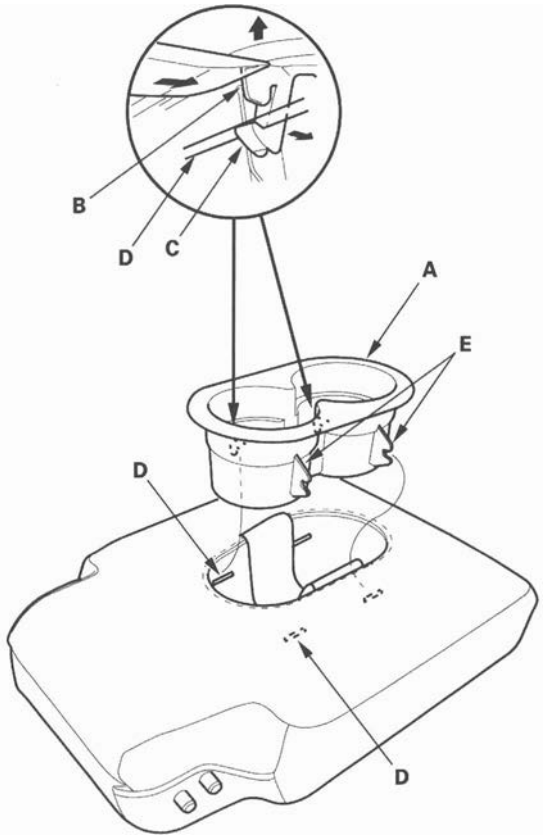

3. Release the hook (A), and pull back the edge of the armrest cover (B) all the way around, and remove it.

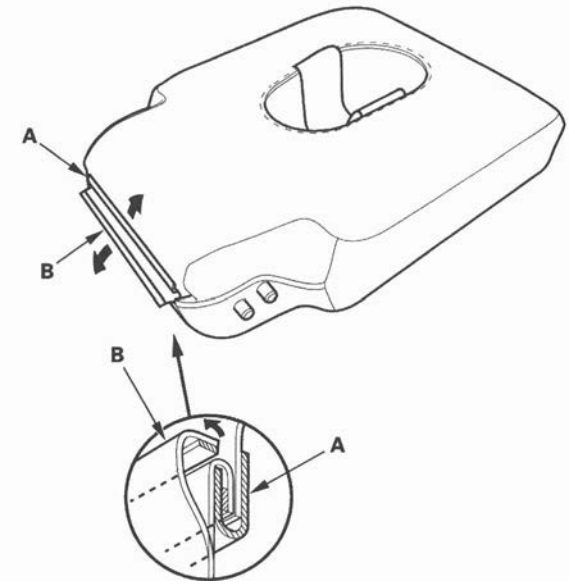

4. Install the cover in the reverse order of removal, and note these items:

   - To prevent wrinkles, make sure the material is stretched evenly over the armrest before securing the hooks.
   - Make sure the right side hooks are installed securely to the wire, then push down on the beverage holder and install the left side hooks into the wire securely.

Rear Seat Removal/Installation

NOTE:
- Put on gloves to protect your hands. Take care not to tear the seams or damage the seat covers.
- Have an assistant help you when removing and installing the rear seat.
- Right rear seat is shown, and left rear seat is similar.

1. Remove the head restraints.

2. Fold the seat-back forward, and slide the rear seat backward fully.

3. Remove the front seat track end covers (A) from the front of both seat tracks.

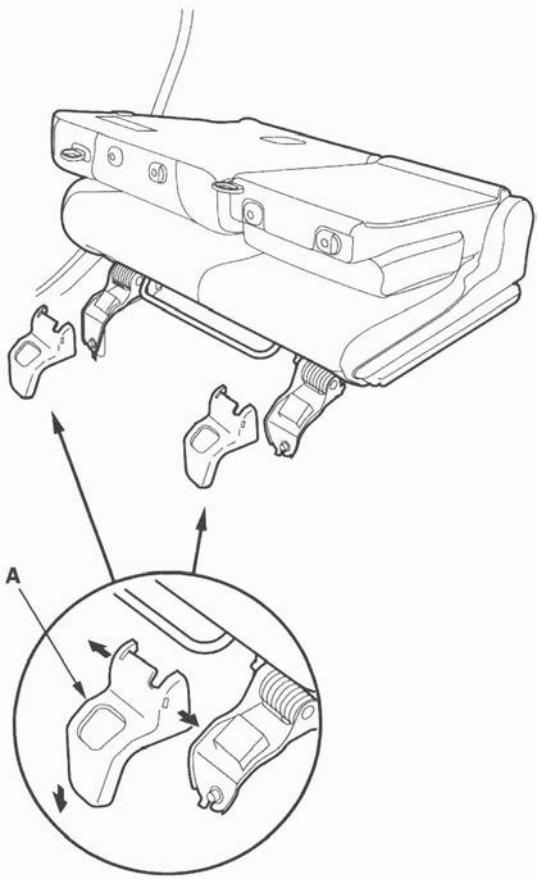

4. Unlock the rear seat and tip it up, then remove the rear seat track end covers (A) from the back of both seat tracks.

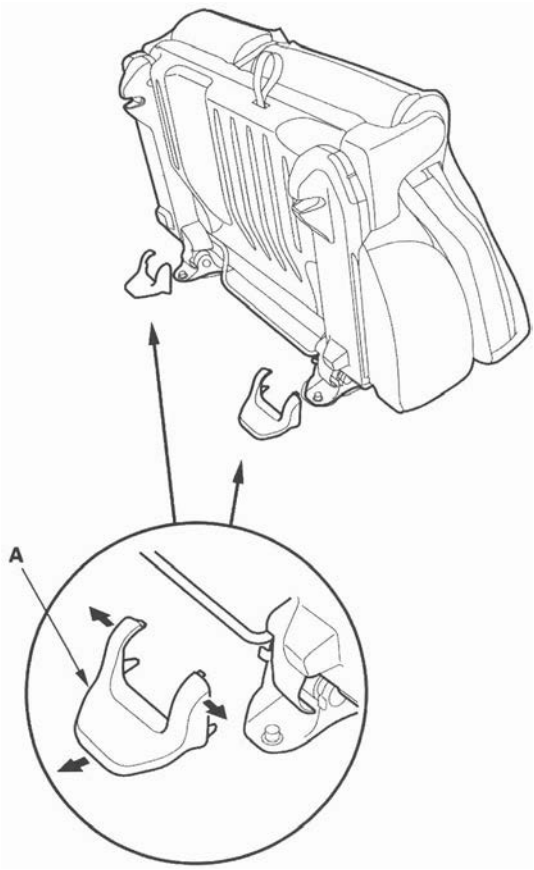

(cont'd)

Rear Seat Removal/Installation (cont'd)

5. While holding the rear seat (A) up, remove the mounting bolts.

Fastener Locations
▶ : Bolt, 4

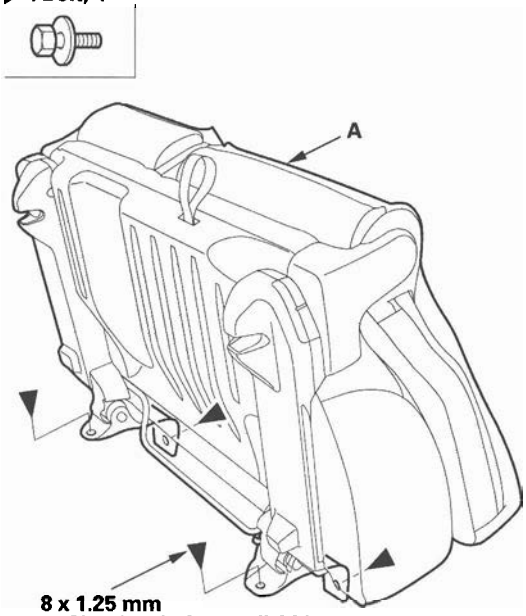

6. With the help of an assistant, remove the rear seat through the door opening.

7. Install the rear seat in the reverse order of removal.

Right Rear Seat Cover Replacement

NOTE:
- Take care not to tear the seams or damage the seat covers.
- Put on gloves to protect your hands.

Seat-back Cover

1. Remove the right rear seat (see page 20-135).

2. Remove the rear seat armrest (see page 20-133).

3. Release the hooks (A), then remove the tether anchor cover (B).

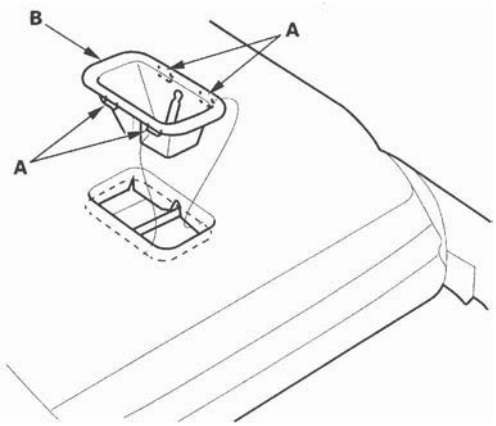

4. Release the bottom hook (A), unzip the seat-back cover (B), then fold back the cover. Pull the strap (C) secured on the seat-back frame inside the seat-back cover through the slot (D).

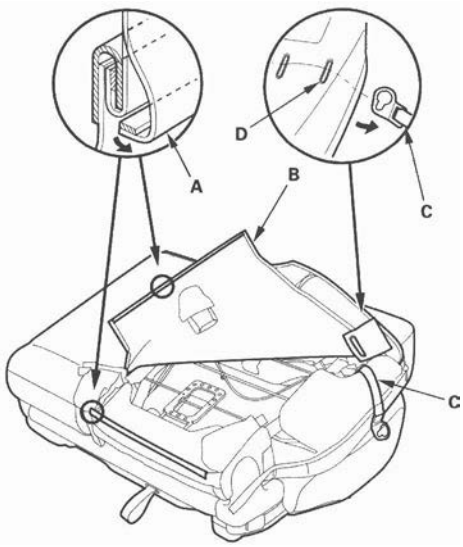

5. Pull back the edge of the rear center seat-back cover (A) all the way around, and release the hooks (B, C, D), then remove the back cover.

Fastener Locations

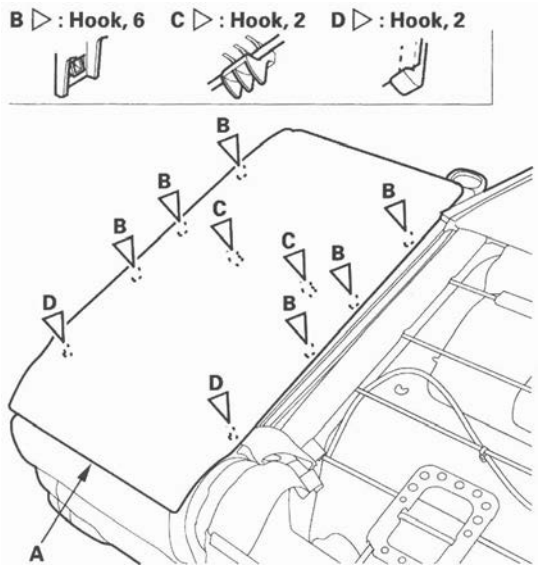

6. Release the hook strips (A), then pull the seat-back cover (B).

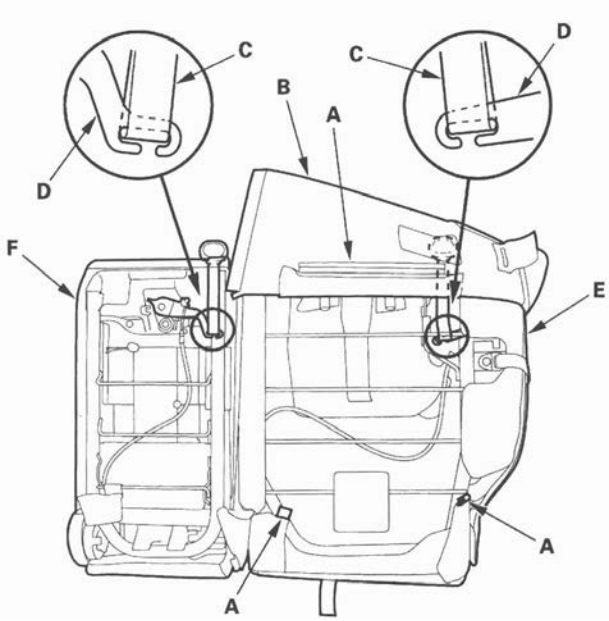

7. Release the straps (C) from the strap levers (D), then remove the strap out through the slots in the seat-back cover (E) and center through trim (F).

8. Pull out the right seat head restraint guides (A) and center seat head restraint guides (B) while pinching the end of the guides, and remove them.

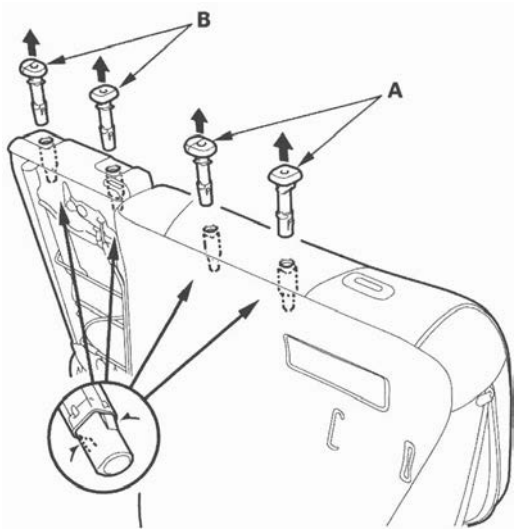

9. Remove the screws, and remove the center through trim (A) from the center seat-back frame.

Fastener Locations

▶ : Screw, 2

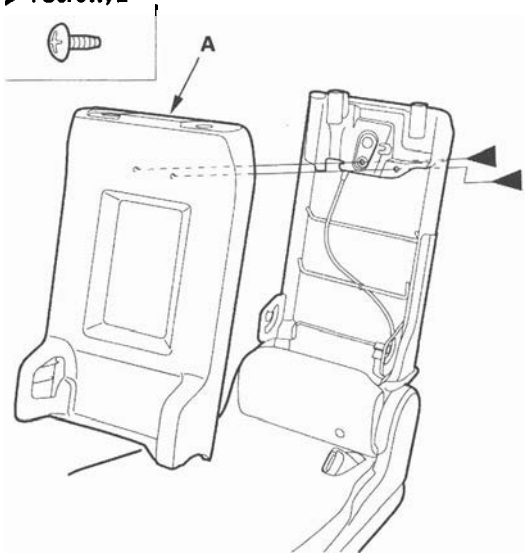

(cont'd)

Right Rear Seat Cover Replacement (cont'd)

10. Release the hook (A). Remove the screws, then remove the rear seat center lower (B) from the center seat-back frame (C).

Fastener Locations
▶ : Screw, 2

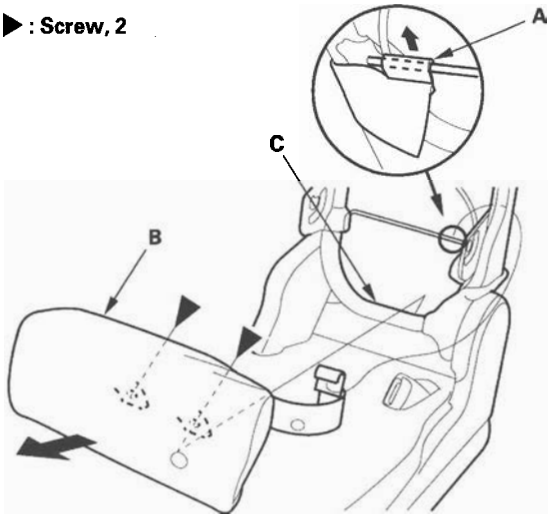

11. Separate the rear seat-back and the rear seat cushion.

12. Pull back the edge of the seat-back cover (A) all the way around, and release the clips (B), then remove the seat-back cover.

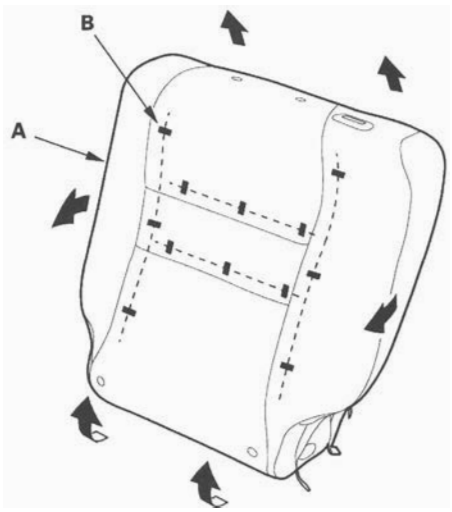

13. If necessary, remove the screw, then release the hooks (A), and remove the strap lever cover (B).

Fastener Location
▶ : Screw, 1

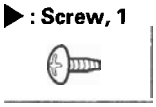

14. Install the cover in the reverse order of removal, and note these items:

- To prevent wrinkles when installing a seat-back cover, make sure the material is stretched evenly over the pad before securing the clips and hook strips.
- Replace any clips (A) you removed with new ones. Install them with commercially available upholstery ring pliers (B).

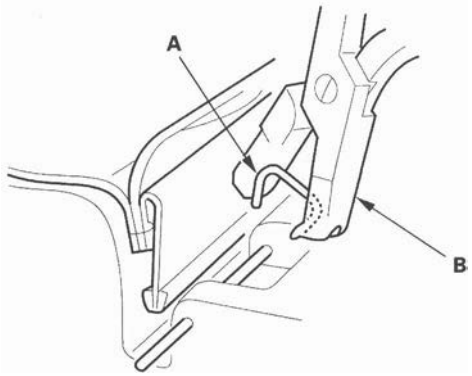

Seat Cushion Cover

1. Remove the right rear seat (see page 20-135).

2. Gently pull out the right outer cover (A) and left outer cover (B) to detach the clips, and release the hooks (C), then remove the covers.

Fastener Locations

▷ : Clip, 2

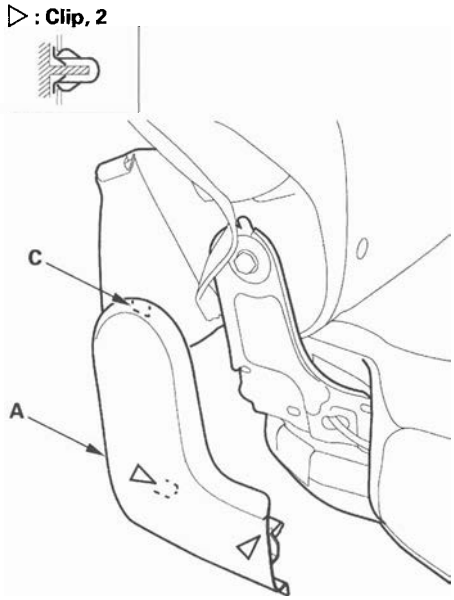

Fastener Locations

▷ : Clip, 2

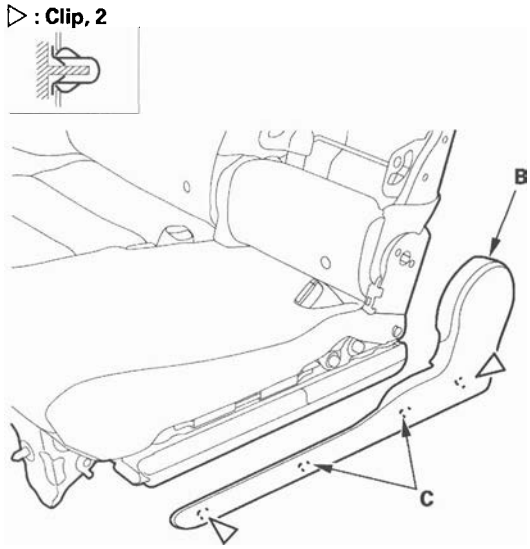

3. Remove the bolts (A, B, C) and screw (D) securing the seat-back (E) and seat cushion (F), then separate them.

Fastener Locations

A ▶ : Bolt, 1 B ▶ : Bolt, 1 C ▶ : Bolt, 3



D ▶ : Screw, 1

4. To allow the seat cushion to slide, use a screwdriver to close the latch.

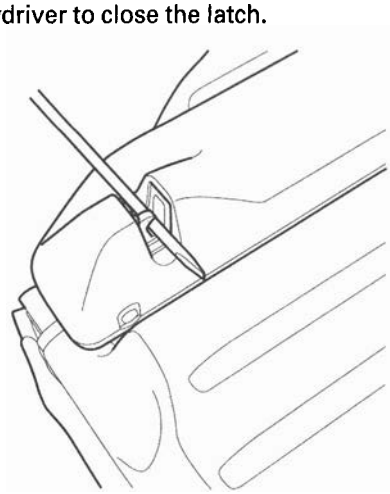

(cont'd)

Right Rear Seat Cover Replacement (cont'd)

5. Slide both seat tracks (A) back fully.

   -1 Raise both mounting brackets (B), and place shop towels (C) between the brackets and the bottom cover (D).
   -2 Push the slide lever (E) down.
   -3 Slide both seat tracks back fully, taking care not to let the mounting brackets scratch the bottom cover.

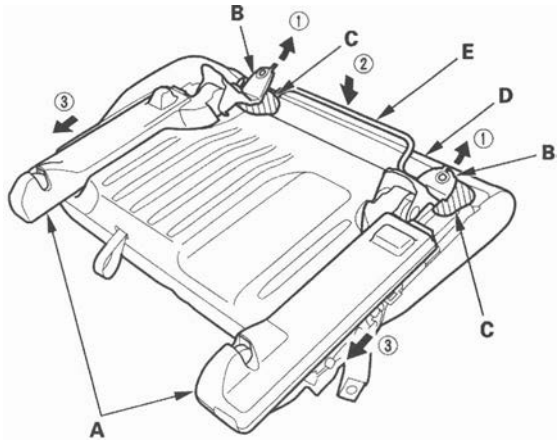

6. Remove the screw (A), then pull up the outer seat track cover (B) to detach the clips (C), and remove it. Remove the outer seat track cover (D). The left seat track is shown, the right seat track is similar.

Fastener Locations
A ▶ : Screw, 1 C ▷ : Clip, 2

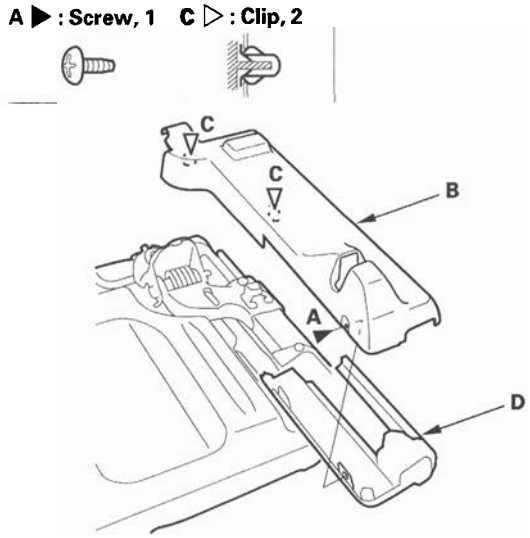

7. Remove the screws, then remove both dampers (A).

Fastener Locations
▶ : Screw, 2

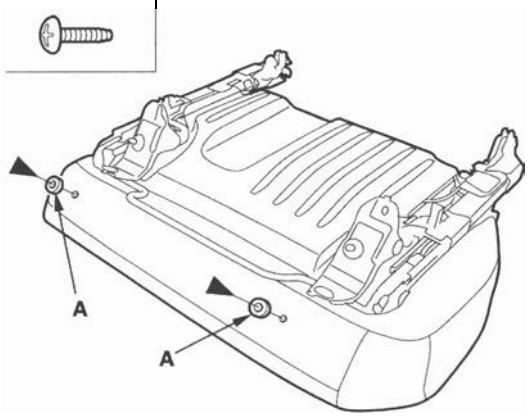

8. Slide both seat tracks (A) forward fully.

   -1 Raise both mounting brackets (B), and hold them.
   -2 Push the slide lever (C) down.
   -3 While holding both mounting brackets, slide both seat tracks forward fully.

   NOTE: While sliding both seat tracks, keep both mounting brackets raised securely so they do not spring back.

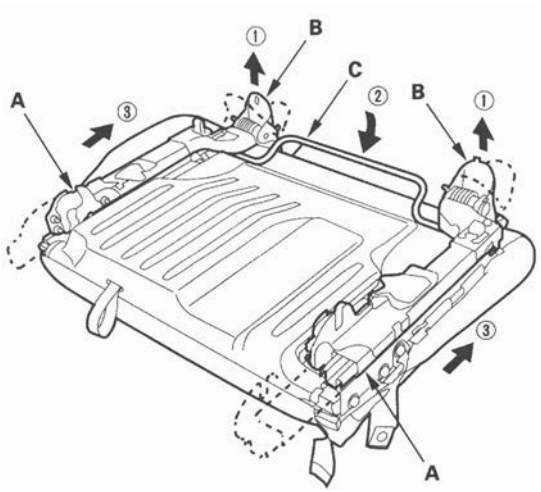

9. Pull back the rear edge of the seat cushion cover (A) to release it from the hooks (B), and remove the screws.

Fastener Locations

▶ : Screw, 5

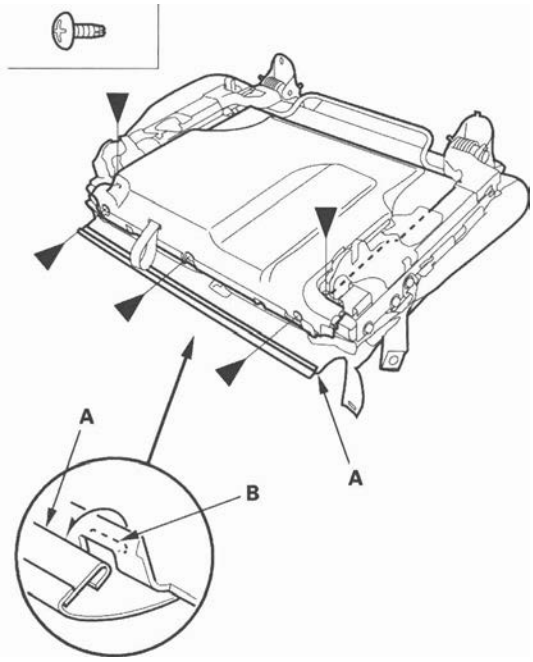

10. While pushing the slide lever (A) down, remove the undercover (B) by pulling it to release the hooks (C). Pass the strap (D) through its slot, and pass both side cables (E) through the side slots in the cover. Take care not to kink the cables.

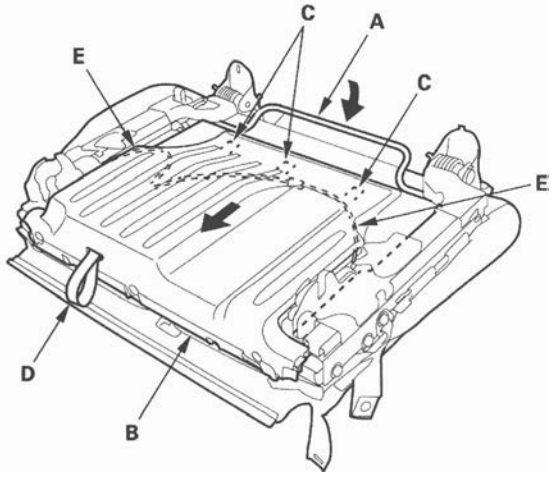

11. Release all of the hook strips (A).

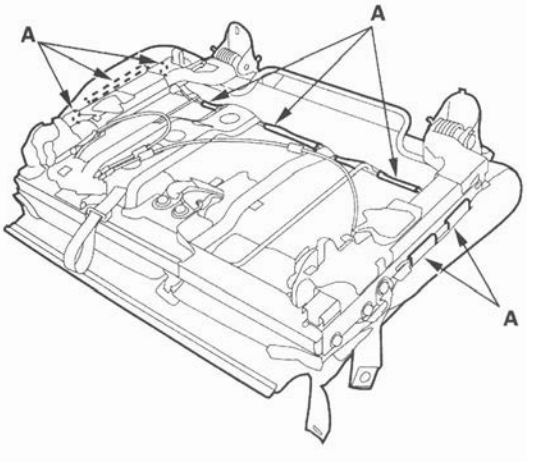

(cont'd)

Right Rear Seat Cover Replacement (cont'd)

12. Remove the rear seat belt buckle and center seat belt detachable anchor (see step 3 on page 24-9).

13. Remove the seat cushion cover (A) with the seat cushion pad from the seat cushion frame (B). Pass the center seat belt buckle (C) through a hole in the seat cushion cover.

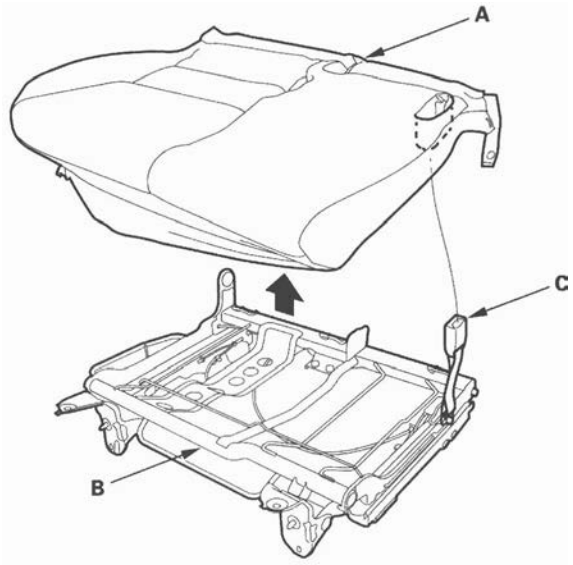

14. Pull back the edge of the seat cushion cover all the way around, and release the clips (A), then remove the seat cushion cover (B).

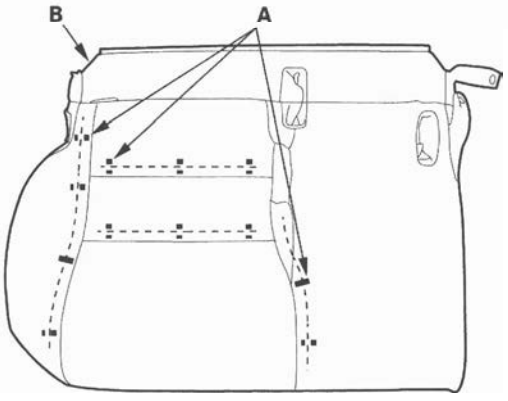

15. Install the cover in the reverse order of removal, and note these items:

- To prevent wrinkles when installing a seat-back cover, make sure the material is stretched evenly over the pad before securing the clips and hook strips.
- Replace any clips (A) you removed with new ones. Install them with commercially available upholstery ring pliers (B).

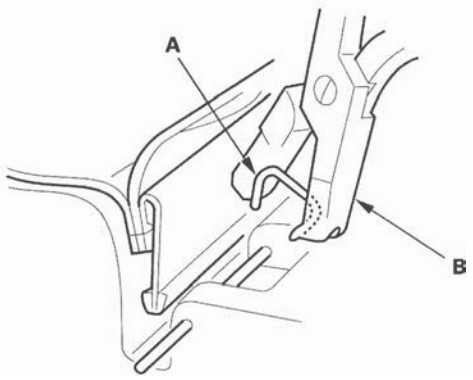

Left Rear Seat Cover Replacement

NOTE:
- Take care not to tear the seams or damage the seat covers.
- Put on gloves to protect your hands.

Seat-back Cover

1. Remove the left rear seat (see page 20-135).

2. Separate the rear seat-back and the rear seat cushion (see step 3 on page 20-139).

3. Release the hooks (A), then remove the tether anchor cover (B).

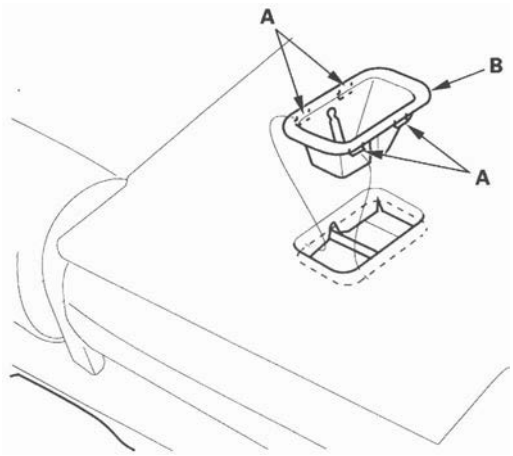

4. Release the bottom hook (A), unzip the seat-back cover (B), then fold back the cover. Pull the seat-back strap (C) secured to the seat-back frame inside the seat-back cover through the slot (D).

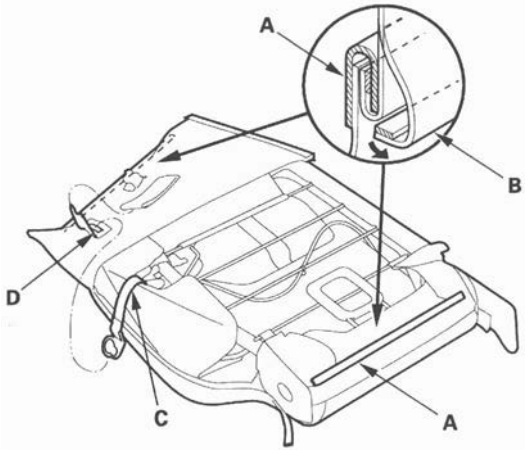

5. Release the hook strips, then pull the seat-back cover.

6. Pull out the head restraint guides (A) while pinching the end of the guides, and remove them.

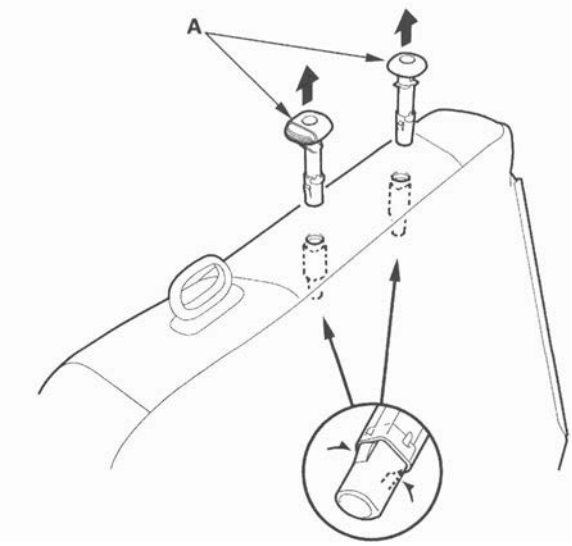

(cont'd)

Left Rear Seat Cover Replacement (cont'd)

7. Release the strap (A) from the strap lever (B), then remove the strap out through the slot (C) in the strap guide (D). From the seat-back inside: Release the hooks (E) of the strap guide from the wire frame (F), then push out the strap guide.

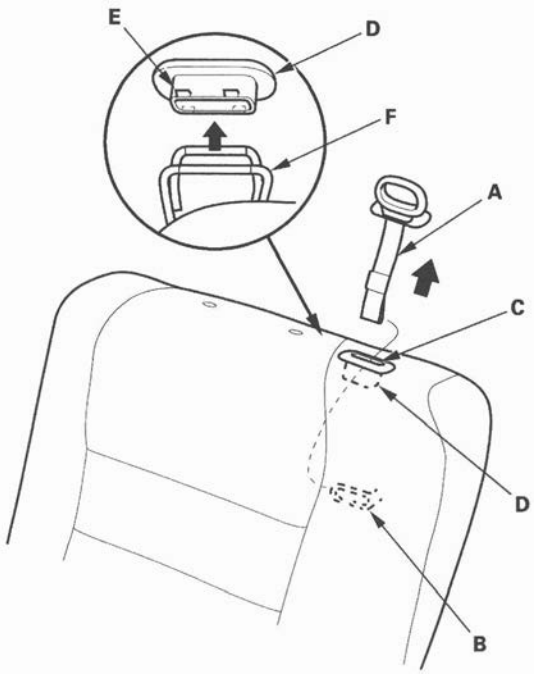

8. Pull back the edge of the seat-back cover all the way around, and release the clips (A), then remove the seat-back cover (B).

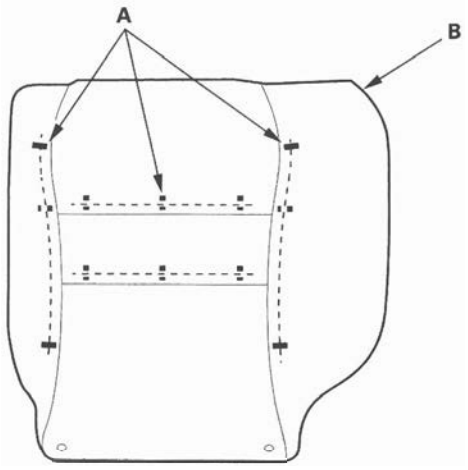

9. Install the cover in the reverse order of removal, and note these items:

   - To prevent wrinkles when installing a seat-back cover, make sure the material is stretched evenly over the pad before securing the clips and hook strips.
   - Replace any clips (A) you removed with new ones. Install them with commercially available upholstery ring pliers (B).

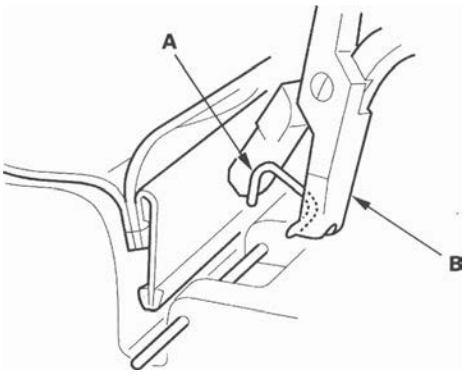

Seat Cushion Cover

1. Remove the left rear seat (see page 20-135).

2. Gently pull out the left outer cover (A) and right outer cover (B), then detach the clips, and remove them by releasing the hooks (C).

Fastener Locations

▷ : Clip, 2

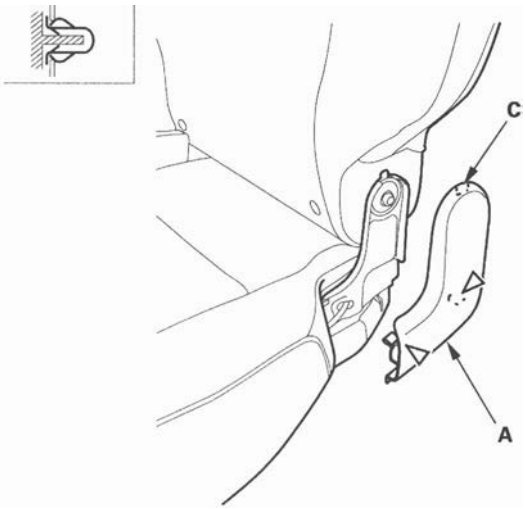

Fastener Locations

▷ : Clip, 2

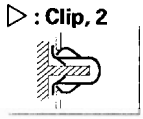

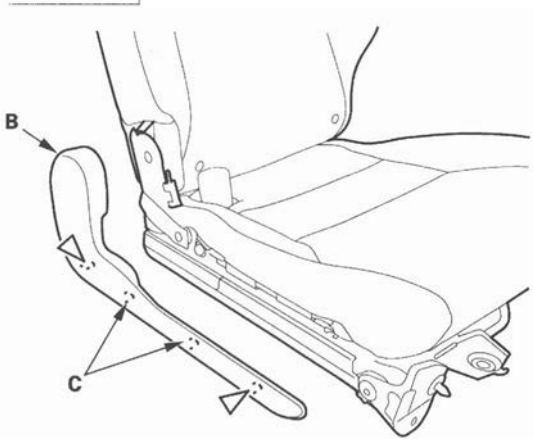

3. Remove the bolts (A, B) securing the seat-back (C) and seat cushion (D), then separate them. If necessary, remove the bushing (E).

Fastener Locations

A ▶ : Bolt, 1 B ▶ : Bolt, 2

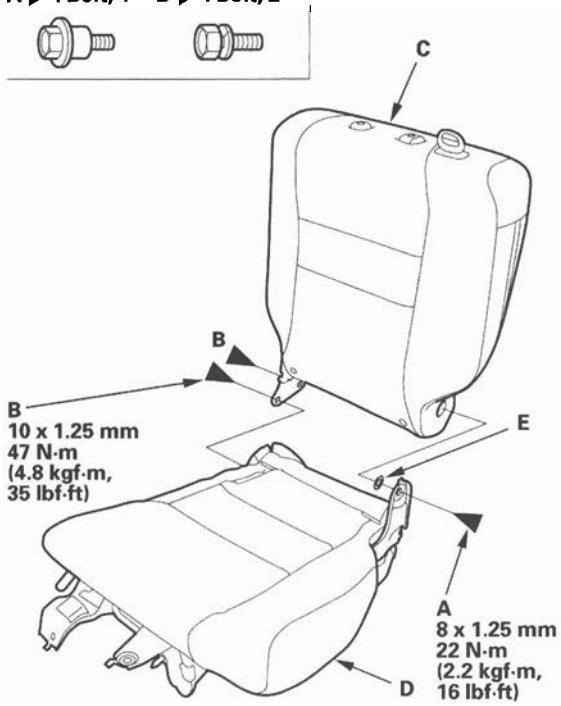

4. To allow the seat cushion to slide, use a screwdriver to close the latch.

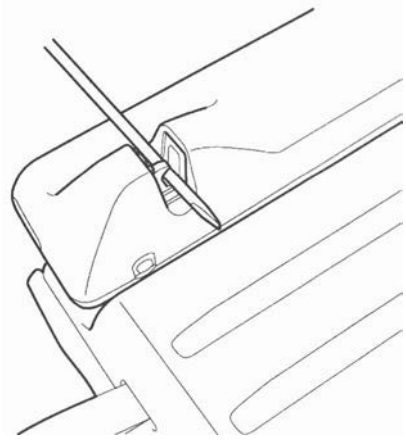

(cont'd)

Left Rear Seat Cover Replacement (cont'd)

5. Slide both seat tracks back fully (see step 5 on page 20-140).

   NOTE: While sliding the outer seat track, keep the outer mounting bracket raised securely so it does not spring back.

6. Remove the outer seat track cover (see step 6 on page 20-140).

7. Remove the screw (A), then pull up the inner seat track cover (B) to detach the clips (C), and remove it. Remove the inner seat track end cover (D).

Fastener Locations

A ▶ : Screw, 1 C ▷ : Clip, 2

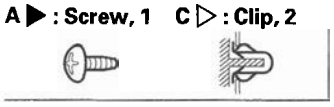

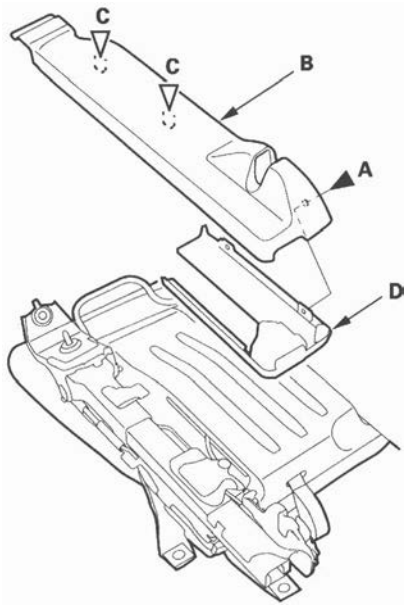

8. Remove both dampers and both damper covers (see step 7 on page 20-140).

9. Slide both seat tracks forward fully (see step 8 on page 20-140).

   NOTE: While sliding the outer seat track, keep the outer mounting bracket raised securely so it does not spring back.

10. Pull back the rear edge of the seat cushion cover (A) to release it from the hooks (B), and remove the screws.

Fastener Locations

▶ : Screw, 4



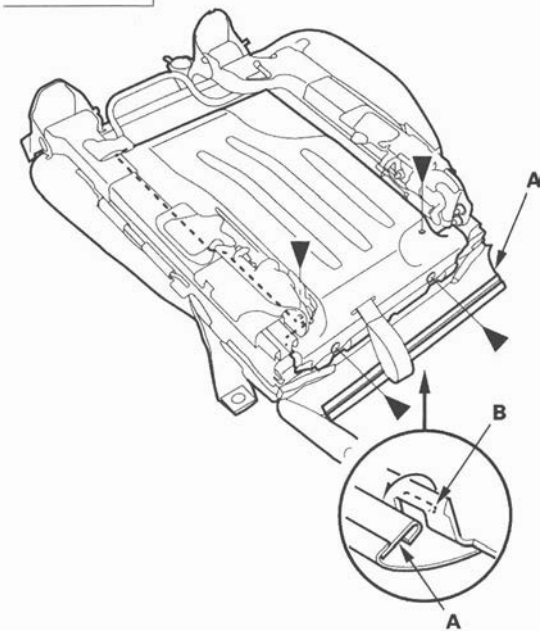

11. While pushing the slide lever (A) down, remove the bottom cover (B) by pulling it to release the hooks (C). Pass the strap (D) through the slot, and pass both side cables (E) through the side slits in the cover. Take care not to kink the cables.

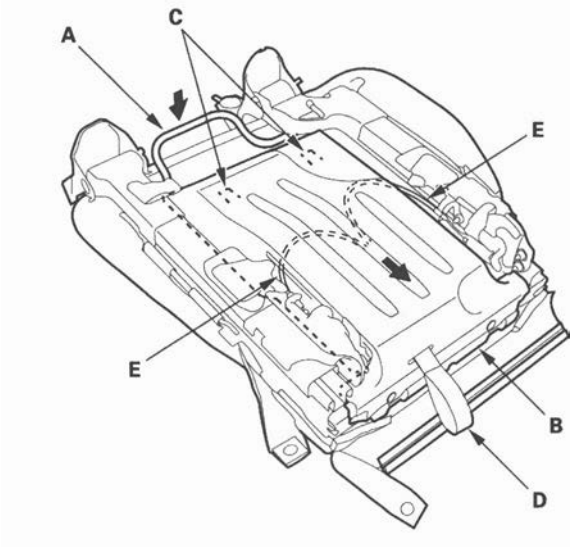

12. Release all of the hook strips (A).

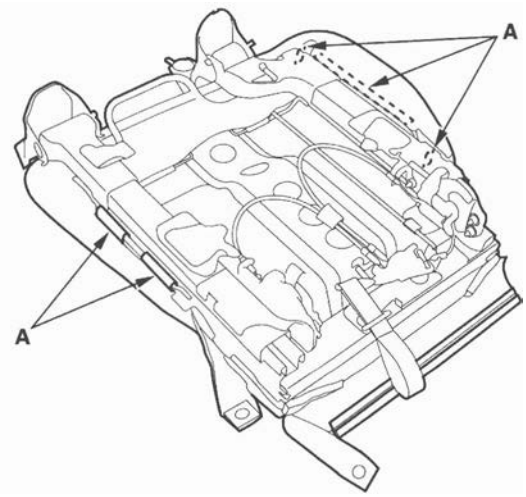

13. Remove the seat cushion cover (A) with the seat cushion pad from the seat cushion frame (B). Pass the seat belt buckle (C) through the hole in the seat cushion cover.

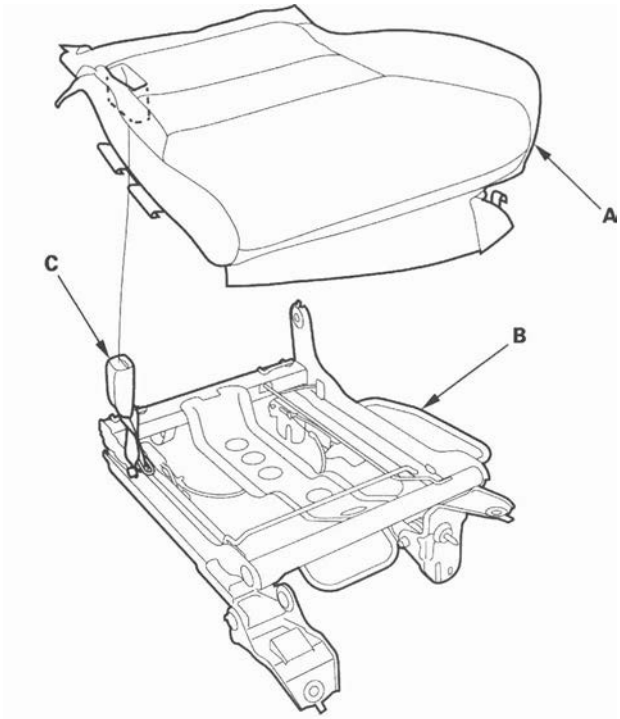

14. Pull back the edge of the seat cushion cover (A) all the way around, and release the clips (B), then remove the cover.

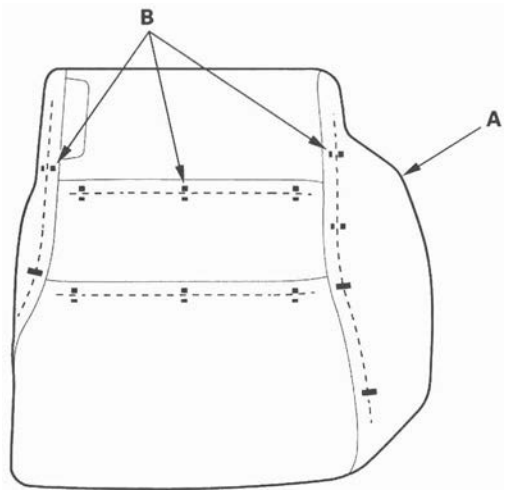

(cont'd)

Left Rear Seat Cover Replacement (cont'd)

15. Install the cover in the reverse order of removal, and note these items:
    - To prevent wrinkles when installing a seat-back cover, make sure the material is stretched evenly over the pad before securing the clips and hook strips.
    - Replace any clips (A) you removed with new ones. Install them with commercially available upholstery ring pliers (B).

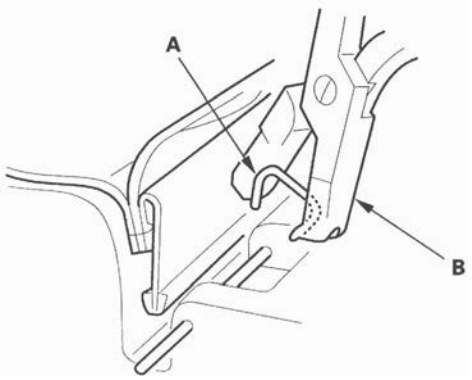

Right Rear Seat-back Lock Control Cable Replacement

NOTE:
- Take care not to tear the seams or damage the seat covers.
- Put on gloves to protect your hands.

1. Remove the right rear seat (see page 20-135).
2. Remove the right seat-back assembly from the seat cushion (see step 3 on page 20-139).
3. Remove the tether anchor cover (see step 3 on page 20-143).
4. Release the bottom hook, unzip the seat-back cover, then fold back the cover (see step 4 on page 20-136).
5. Release the strap from the strap lever (see step 7 on page 20-137).
6. Remove the head restraint guides (see step 8 on page 20-137).
7. Remove the seat-back cover/pad from the frame (see step 12 on page 20-138).
8. Remove the strap lever cover (see step 13 on page 20-138).
9. Disconnect the seat-back control cable (A) from the inner recline adjuster (B) and the outer recline adjuster (C). Release the clamp (D), then remove the cable.

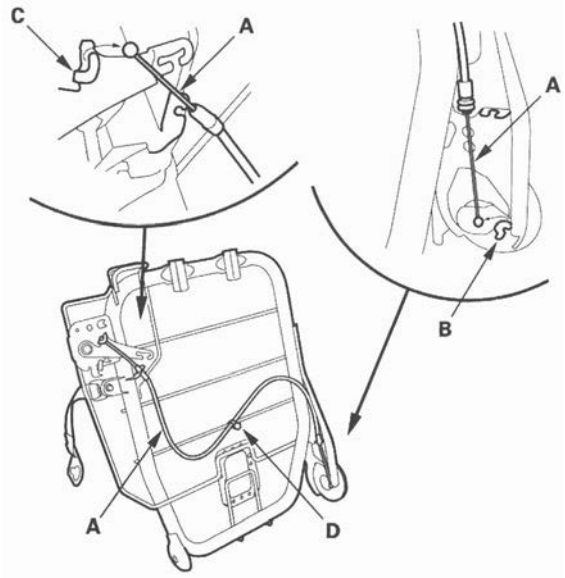

10. Install the cable in the reverse order of removal, and note these items:
    - Replace the clamp you removed with a new one.
    - To prevent wrinkles when installing a seat-back cover, make sure the material is stretched evenly over the pad before securing the hooks.

Front Bumper Removal/Installation

NOTE:
- Have an assistant help you when removing and installing the front bumper.
- Take care not to scratch the front bumper and body.
- Put on gloves to protect your hands.

1. Remove the front bulkhead cover (see page 20-165).

2. Remove the bolts (A) and clips (B, C) securing the front bumper (D).

   NOTE: To remove the clips, pry the inner clip up at the edge near the line (E) on its head.

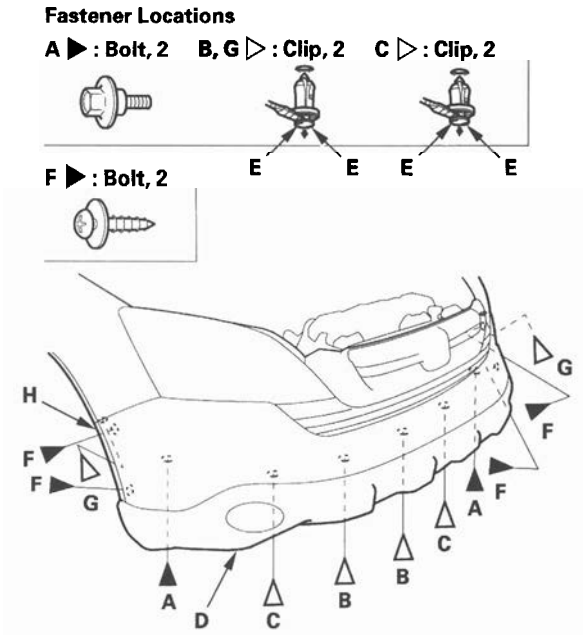

3. Remove the screws (F) and clips (G) securing the front bumper side trim (H).

4. Pull on the front bumper (A) at the wheel arch areas to release it from the hooks (B) on the side spacer (C).

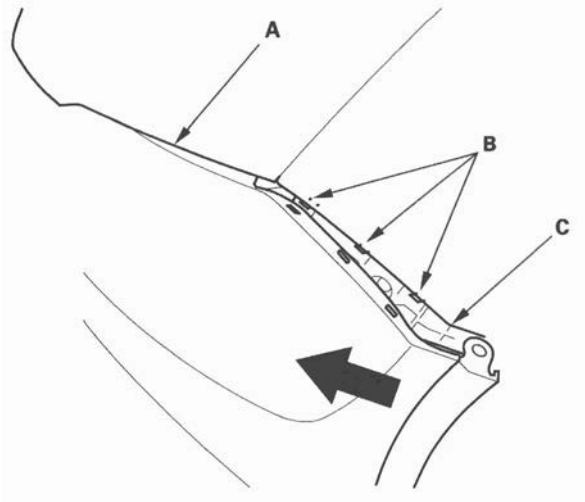

5. With the help of an assistant, while pulling the wheel arch portion away from the side spacer (A), pull the front bumper to release the bumper from the hooks (B) on the center upper beam (C).

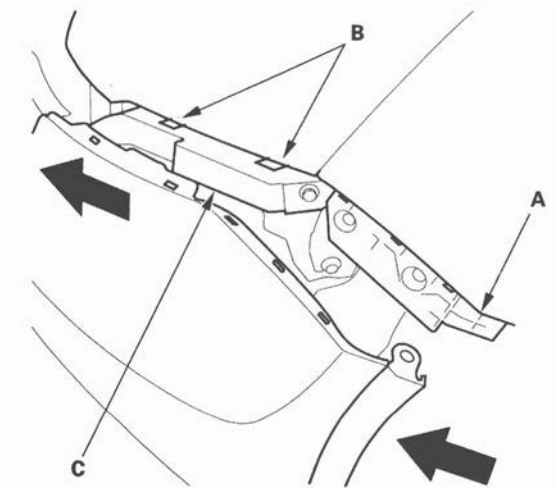

(cont'd)

Front Bumper Removal/Installation (cont'd)

6. Remove the front bumper (A).

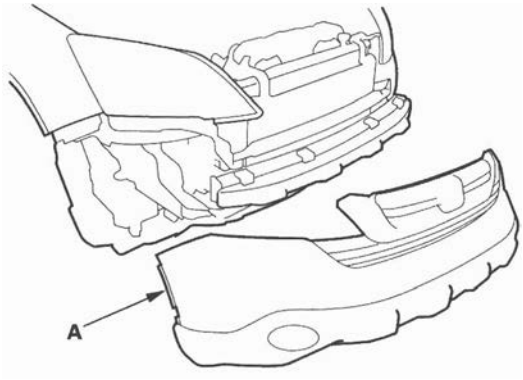

7. Remove the front bumper absorber (A) from the front bumper beam (B).

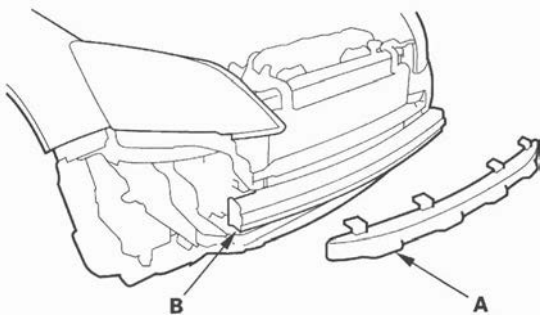

8. Install the bumper in the reverse order of removal, and note these items:

   Make sure the front bumper engages the hooks (of both corner upper beams and side spacers) on each side securely.
   - Check if the clips are damaged or stress-whitened, and if necessary, replace them with new ones.
   - Push the clips and hooks into place securely.

Front Bumper Disassembly/ Reassembly

NOTE: Take care not to scratch the front bumper faces.

1. Remove the front bumper (see page 20-149)
2. Remove the clips, then separate the upper front bumper face (A) from the lower front bumper face (B).

Fastener Locations

▷ : Clip, 4

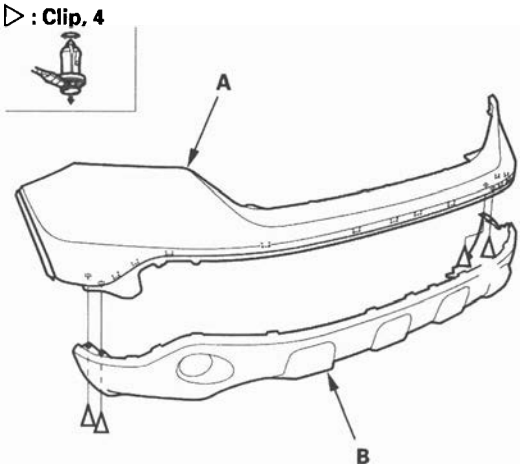

3. Reassemble the bumper faces in the reverse order of disassembly.

Rear Bumper Removal/Installation

NOTE:
- Have an assistant help you when removing and installing the rear bumper.
- Take care not to scratch the rear bumper and body.
- Put on gloves to protect your hands.

1. Remove the rear splash guard (see page 20-184).
2. Remove the caps (A). Remove the bolts (B, C) and clips (D) securing the rear bumper (E).

Fastener Locations

B ▶ : Bolt, 2 C ▶ : Bolt, 2 D ▷ : Clip, 2

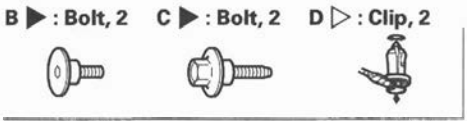

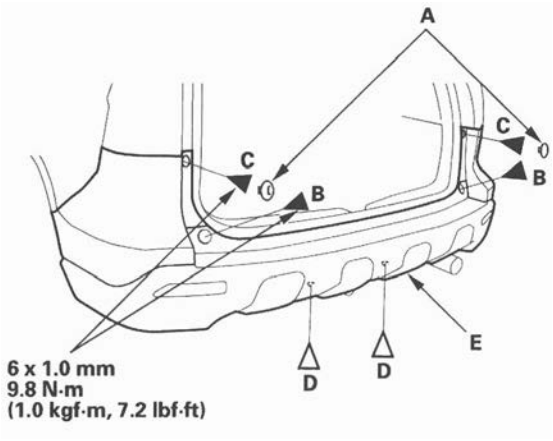

(cont'd)

Rear Bumper Removal/Installation (cont'd)

3. Pull on the rear bumper (A) at the wheel arch areas to release it from the hooks (B) on the side spacers (C).

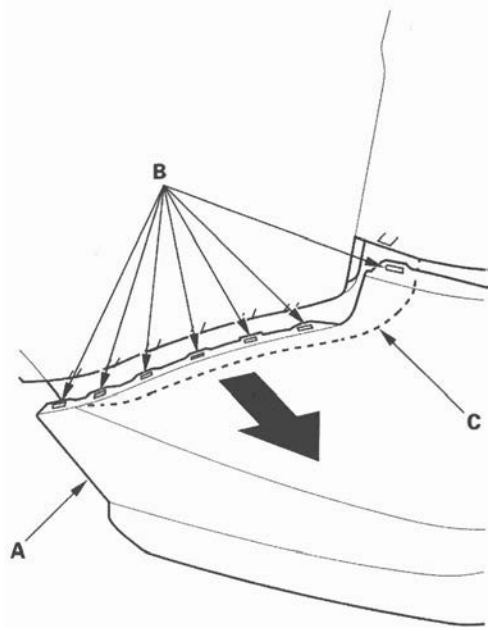

4. With the help of an assistant, while pulling the wheel arch portion away from the side spacer (A), pull the rear bumper (B) to release the bumper from the hooks (C) on the upper bracket (D).

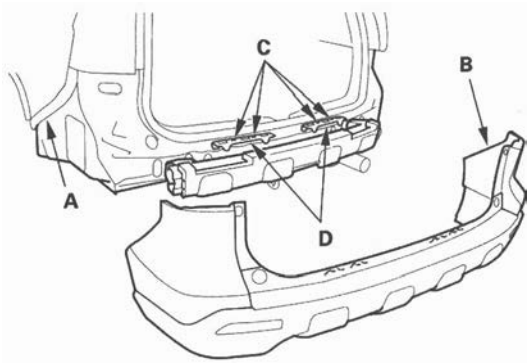

5. Remove the rear bumper absorber (A) from the rear bumper beam (B).

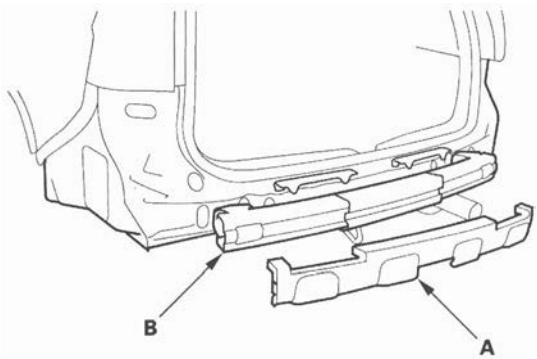

6. Install the bumper in the reverse order of removal, and note these items:

   - Make sure the rear bumper engages the hooks (of both the side bracket and side spacers) on each side securely.
   - Check if the clips are damaged or stress-whitened, and if necessary, replace them with new ones.
   - Push the clips and hooks into place securely.

Rear Bumper Disassembly/Reassembly

NOTE: Take care not to scratch the bumper faces.

1. Remove the rear bumper (see page 20-151).

2. Remove the clips, then separate the left rear bumper face (A), right rear bumper face (B) and lower rear bumper face (C).

Fastener Locations

▷ : Clip, 8

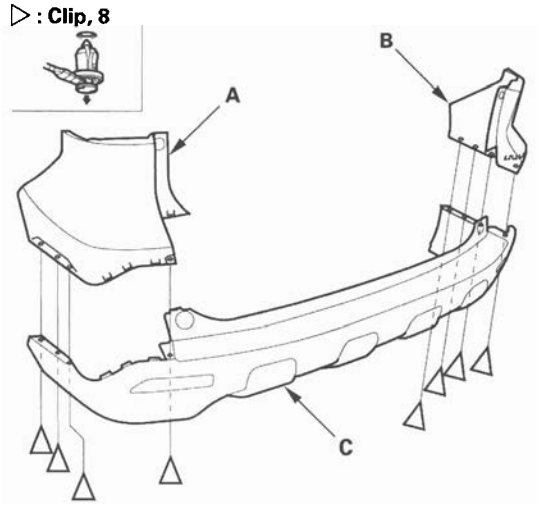

3. Remove the clip (A) and screw (B), then remove the rear bumper under trim (C) from the lower rear bumper face (D).

Fastener Locations

A ▷ : Clip, 1 B ▶ : Screw, 1

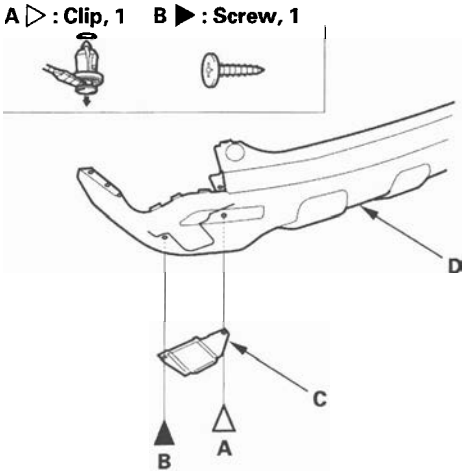

4. Reassemble the bumper faces in the reverse order of disassembly, and note these items:

   - Check if the clips are damaged or stress-whitened, and if necessary, replace them with new ones.
   - Push the clips and hooks into place securely.

Rear Bumper Reflector Replacement

NOTE:
- Take care not to scratch the rear bumper and body.
- Put on gloves to protect your hands.

1. Remove the rear bumper (see page 20-151).

2. Release the hook (A), then remove the rear bumper reflector (B).

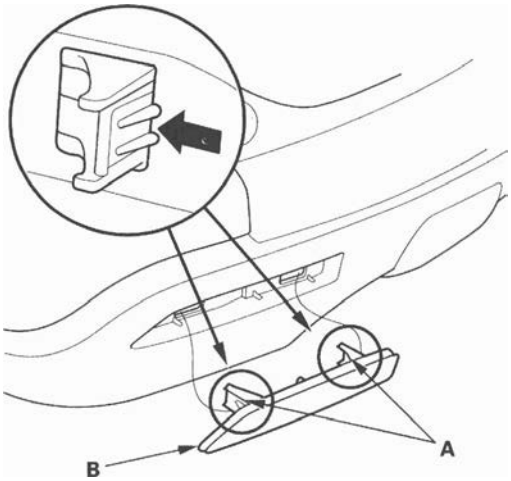

3. Reattach the hook to the rear bumper first, and push the clip into place securely.

Hood Adjustment

1. Remove these items:

   Front bulkhead cover (see page 20-165)
   - Front fender trim (see page 20-165)
   - Cowl cover (see page 20-167)

2. Slightly loosen each bolt (A).

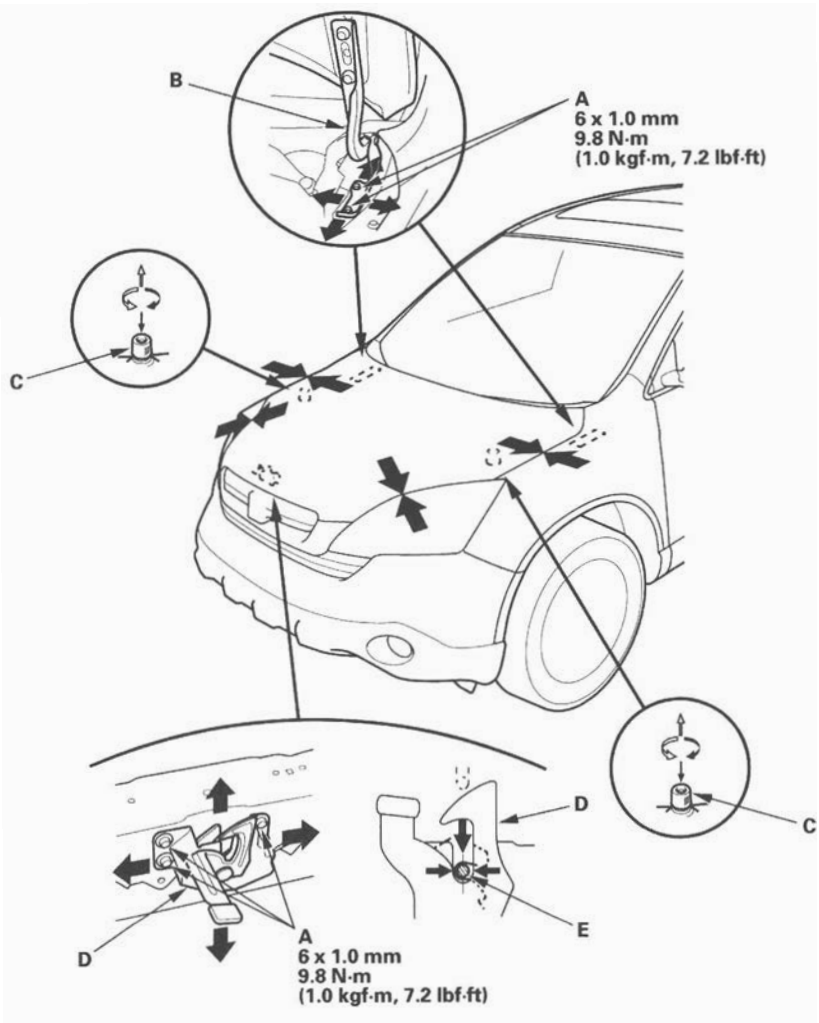

3. Adjust the hood alignment in this sequence:

   - Adjust the hood right and left, as well as forward and rearward, by using the elongated holes in the hood hinges (B).
   - Turn the hood edge cushions (C), as necessary, to make the hood fit flush with the body at the front and side edges.

4. Adjust the hood latch (D) to obtain the proper height at the forward edge, and move the hood latch right or left until the striker (E) is centered in the hood latch.

5. Tighten the bolts to the specified torque.

(cont'd)

Hood Adjustment (cont'd)

6. Check that the hood opens properly and closes securely.
7. Apply touch-up paint to the hinge mounting bolts and around the hinges, and let the paint dry.
8. Apply multipurpose grease to the hood latch and hood hinges as indicated by the arrows.

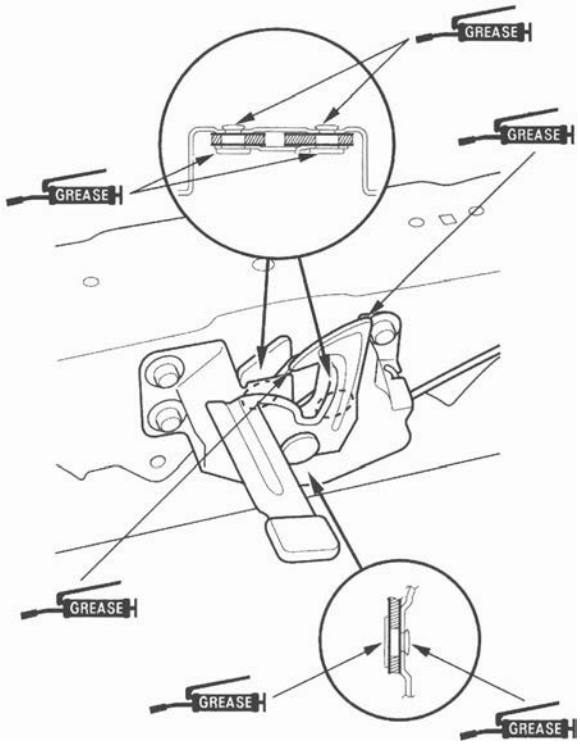

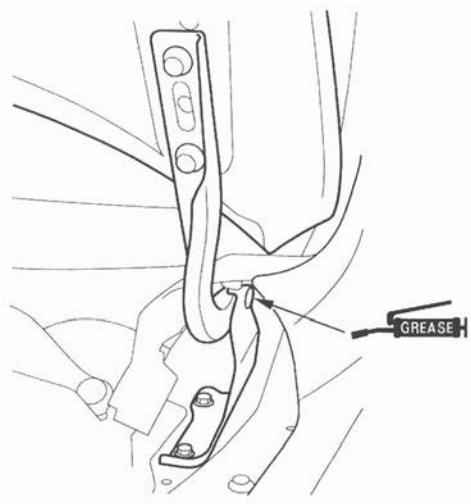

9. Reinstall all of the removed parts.

Hood Seal Replacement

1. Using a clip remover, detach the clips (A, B), then remove the hood seals (C, D). Take care not to scratch the hood.

Fastener Locations

A ▷: Clip, 12 **B ▷: Clip, 6**

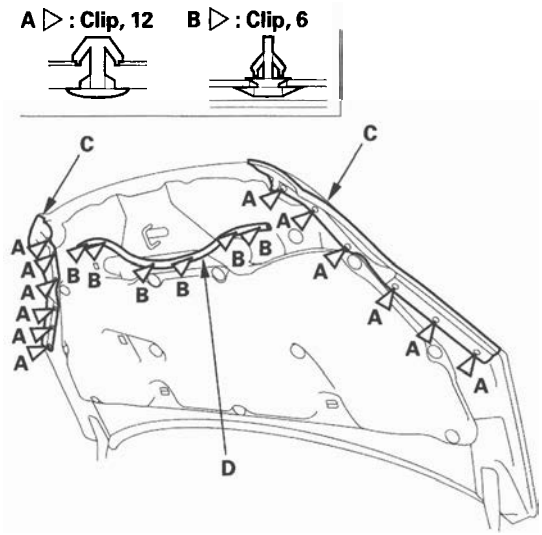

2. Install the seals in the reverse order of removal, and note these items:
   - Check if the clips are damaged or stress-whitened, and if necessary, replace them with new ones.
   - Push the clips into place securely.

Hood Insulator Replacement

1. Using a clip remover, detach the clips. Release the hooks (A), then remove the hood insulator (B). Take care not to scratch the hood.

Fastener Locations

▷ : Clip, 11

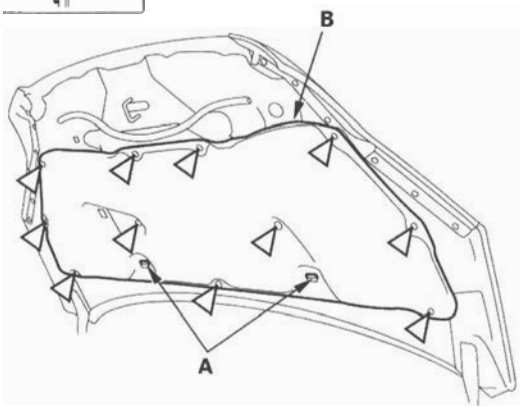

2. Install the insulator in the reverse order of removal, and note these items:

   - Check if the clips are damaged or stress-whitened, and if necessary, replace them with new ones.
   - Push the clips and hooks into place securely.

Tailgate Adjustment

NOTE:
- Have an assistant help you when adjusting the tailgate.
- Take care not to scratch the tailgate, body, and other related parts.
- Put on gloves to protect your hands.

1. Remove these items:
   - Quarter pillar glass trim, both sides (see page 20-69)
   - Tailgate weatherstrip, as needed (see page 20-160)
   - Cargo area light (see page 22-178)
2. Pull down the rear portion of the headliner (see page 20-83). Take care not to bend the headliner excessively.
3. Remove the tailgate support strut from each side (see page 20-159).
4. Remove the cap (A) from the rear trim panel (B).

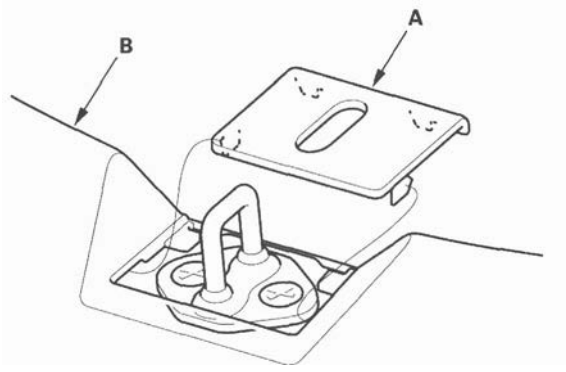

5. Slightly loosen the screws.
6. Adjust the tailgate (A) alignment in the following sequence:
   - Adjust the tailgate hinges (B) right and left, using the elongated holes.
   - Turn the tailgate edge cushions (C), in or out as necessary, to make the tailgate fit flush with the body at the side edges.
   - Adjust the fit between the tailgate and tailgate opening by moving the striker (D), and adjust the striker right or left until it is centered in the tailgate latch (E).

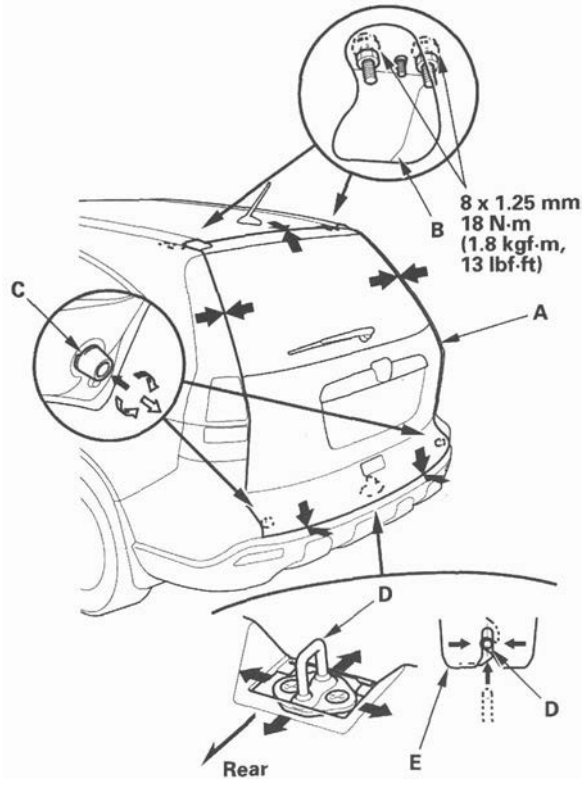

7. Tighten each bolt and nut securely.
8. Check that the tailgate opens properly and locks securely.
9. Reinstall the support struts securely.
10. Apply touch-up paint to the hinge mounting nuts and around the hinges, and let the paint dry.
11. Apply multipurpose grease to the pivot portion of the tailgate hinges (A) as indicated by the arrows.

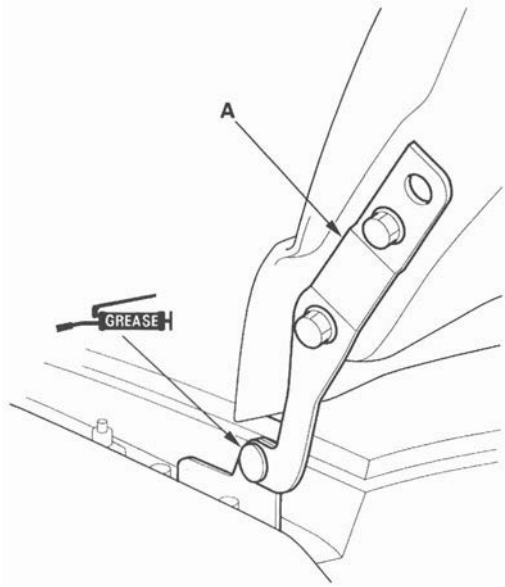

12. Reinstall all of the removed parts.

Tailgate Support Strut Replacement

1. With the help of an assistant, use a flat-tip screwdriver (A) to pry the support strut clips (B) from each end of the support strut (C) at the tailgate and body, then release the support strut from the pivot bolts (D). Do not remove the clips from the support strut.

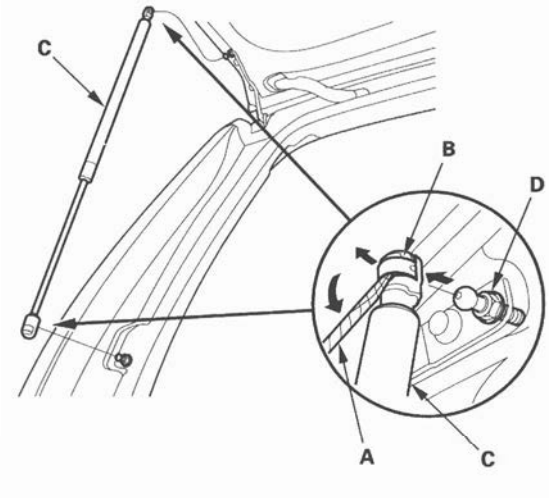

2. Remove the pivot bolts (A).

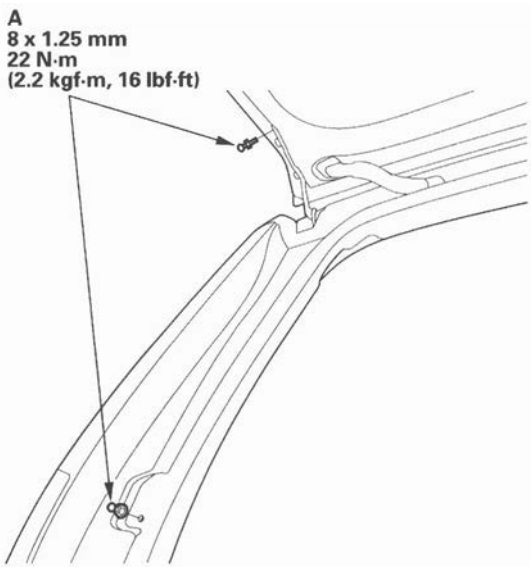

(cont'd)

Tailgate Support Strut Replacement (cont'd)

3. Set the clips (A) to the original position, then reattach the support strut (B) on the pivot bolts (C) by pushing the support strut onto the pivot.

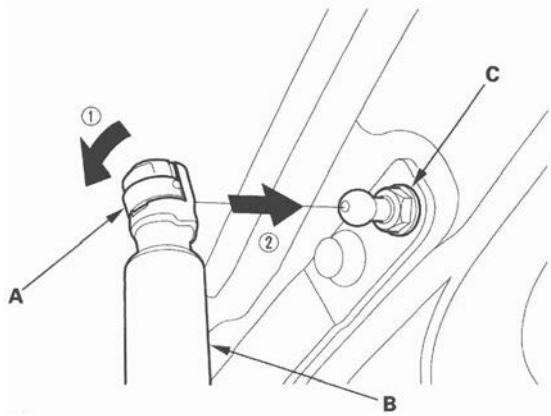

Tailgate Weatherstrip Replacement

1. Remove the tailgate weatherstrip (A) by pulling out on it.

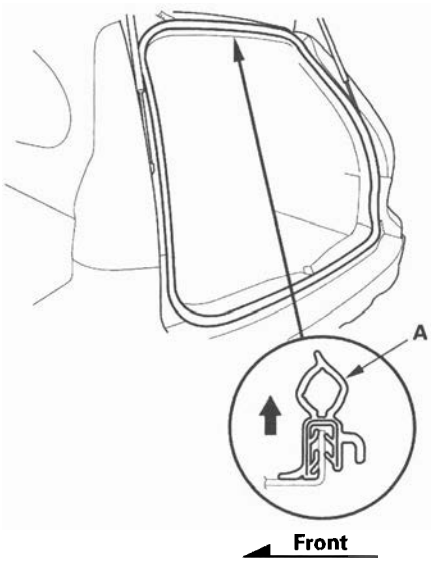

2. Locate the painted alignment mark (A) on the tailgate weatherstrip (B). Align the painted mark with the alignment tab in the center of the tailgate opening, and install the weatherstrip. Make sure it's seated completely and facing in the direction shown. Make sure there are no wrinkles in the weatherstrip.

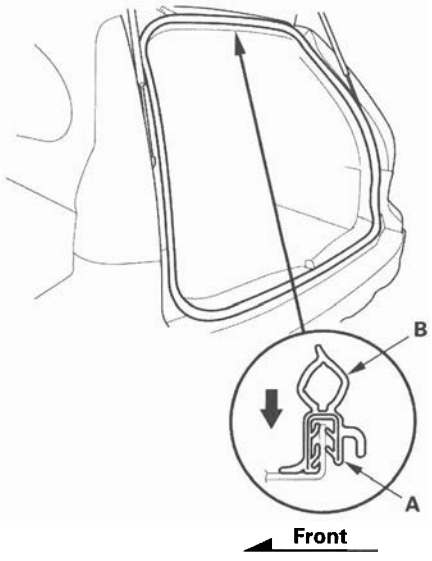

3. Check for water leaks.

Fuel Fill Door Adjustment

1. Remove the nut (A), then remove the open spring (B).

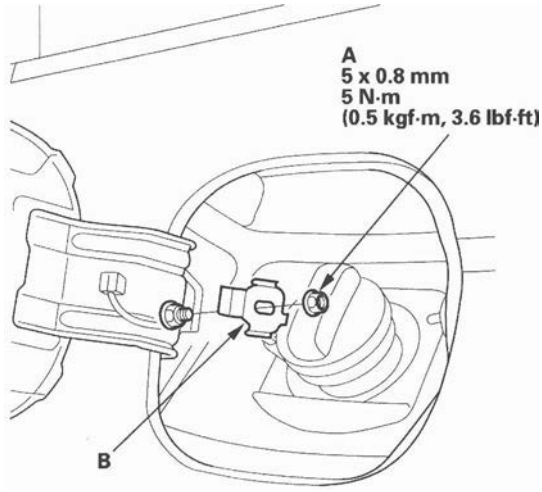

2. Slightly loosen the hinge mounting bolts (A).

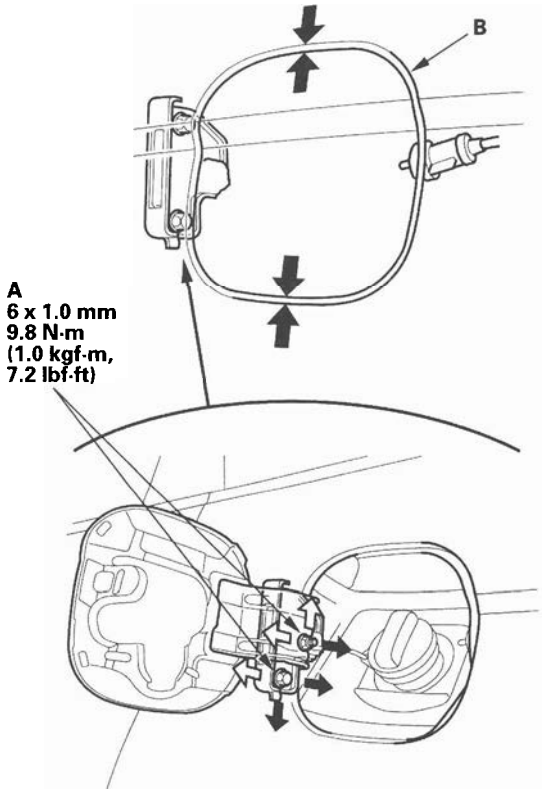

3. Adjust the fuel fill door (B) in or out until it's flush with the body, and up or down as necessary to equalize the gaps.

4. Tighten the hinge mounting bolts.

5. Check that the fuel fill door opens properly and locks securely, and check that the rear of the door is flush with the body.

6. Reinstall the open spring and nut.

7. Apply multipurpose grease to each location indicated by the arrows.

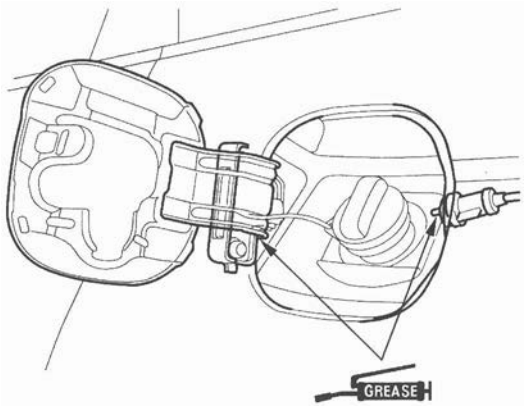

8. Apply touch-up paint to the hinge mounting bolts and around the hinges.

Fuel Cap Adapter Replacement

NOTE: Take care not to scratch the body.

1. Remove the fuel pipe protector (see page 20-184).
2. Remove the cap (A) by turning it counterclockwise.

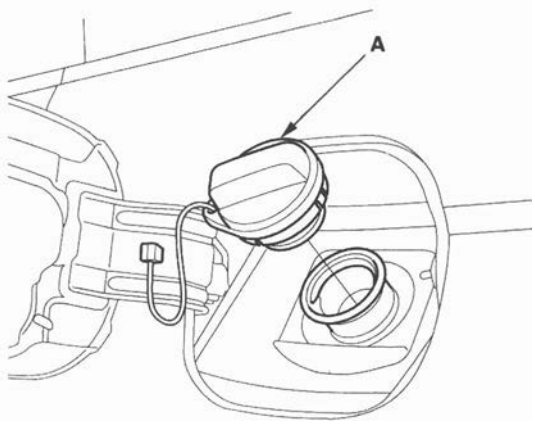

3. From under the body, push out the hooks (A). Then turn the fuel cap adapter (B), and remove it from the fuel pipe.

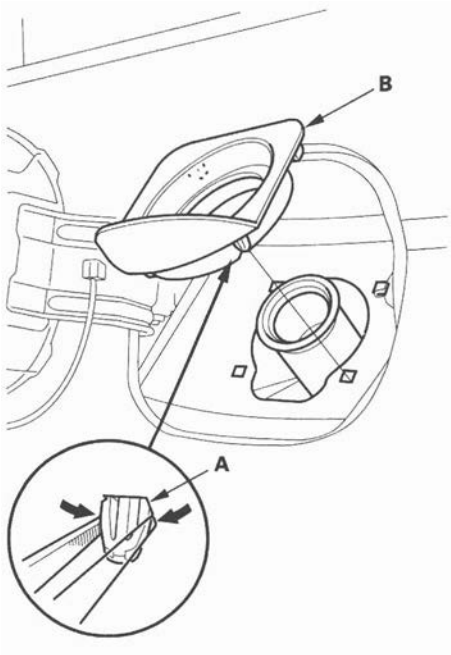

4. Install the adapter in the reverse order of removal.

Upper Front Grille Replacement

NOTE: Take care not to scratch the bumper and grille.

1. Remove the front bumper (see page 20-149).
2. Remove the clips from the back of the front grille and release the hooks (A), then release the hooks (B) and remove the upper front grille (C) from the lower front grille (D).

Fastener Locations

▷: Clip, 4

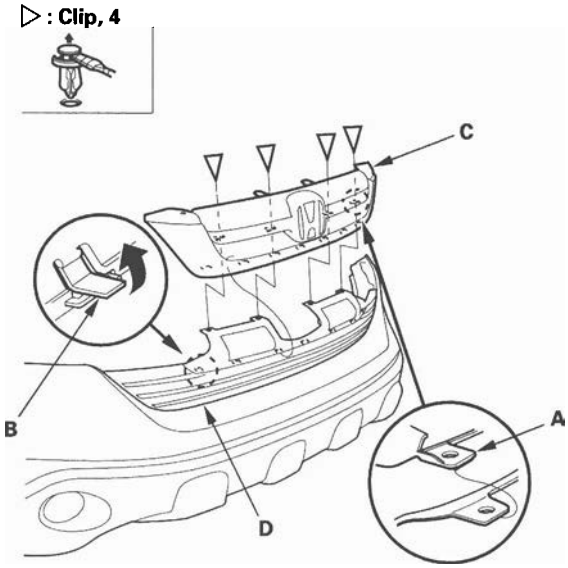

3. Remove the screws, then release the hooks (A) and remove the upper front grille molding (B), the right upper front grille spacer (C), the left upper front grille spacer (D), and front emblem base (E) from the upper front grille base (F).

Fastener Locations

▶: Screw, 14

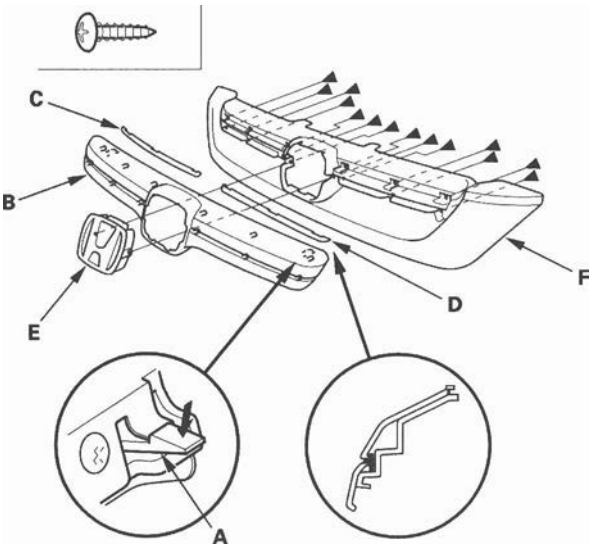

4. If emblem replacement is necessary, refer to emblem/sticker replacement (see page 20-180).
5. Install the grille in the reverse order of removal, and note these items:
   - Check if the clips are damaged or stress-whitened, and if necessary, replace them with new ones.
   - Push the clips and hooks into place securely.

Lower Front Grille Replacement

NOTE: Take care not to scratch the bumper and grille.

1. Remove these items:
   - Front bumper (see page 20-149)
   - Front upper grille (see page 20-163)

2. Remove the clips and push nuts (A), then release the hooks (B) and remove the lower front grille (C) from the front bumper (D).

Fastener Locations

▷ : Clip, 2

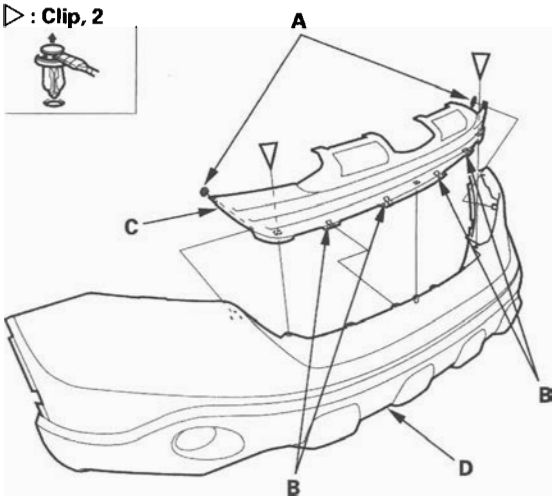

3. Release the hooks (A), then remove the right lower front grille molding (B), left lower front grille molding (C), middle lower front grille molding (D), and lower lower front grille molding (E) from the lower front grille base (F).

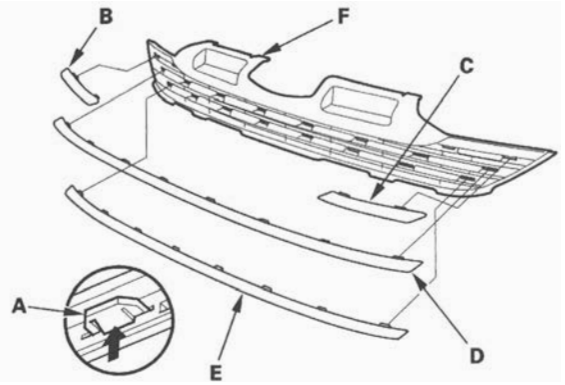

4. Install the grille in the reverse order of removal, and note these items:
   - Check if the clips are damaged or stress-whitened, and if necessary, replace them with new ones.
   - Push the clips and hooks into place securely.

Front Fender Trim Replacement

Special Tools Required
KTC trim tool set SOJATP2014 *
* Available through the American Honda Tool and Equipment Program; call 888-424-6857

NOTE:
- Take care not to scratch the fender trim and body.
- Use the appropriate tool from the KTC trim tool set to avoid damage when prying components.

1. Remove the clips (A, B), then remove the front fender trim (C).

Fastener Locations
A ▷ : Clip, 2 B ▷ : Clip, 1



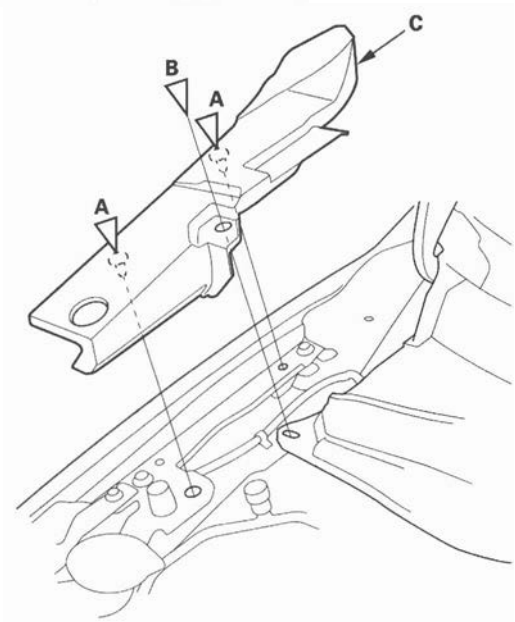

2. Install the trim in the reverse order of removal, and note these items:

   - Check if the clips are damaged or stress-whitened, and if necessary, replace them with new ones.
   - Push the clips into place securely.

Front Bulkhead Cover Replacement

NOTE:
Put on gloves to protect your hands.
- Take care not to scratch the front bumper and body.

1. Remove the clips (A, B) by carefully pulling the front grille cover (C) up, then remove the cover by releasing the front edge of the cover from the grille (D). Take care not to scratch the body.

   NOTE: To remove the clips, pry the inner clip up at the edge near the line (E) on its head.

Fastener Locations
A ▷ : Clip, 2 B ▷ : Clip, 5

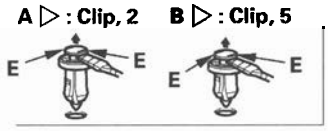

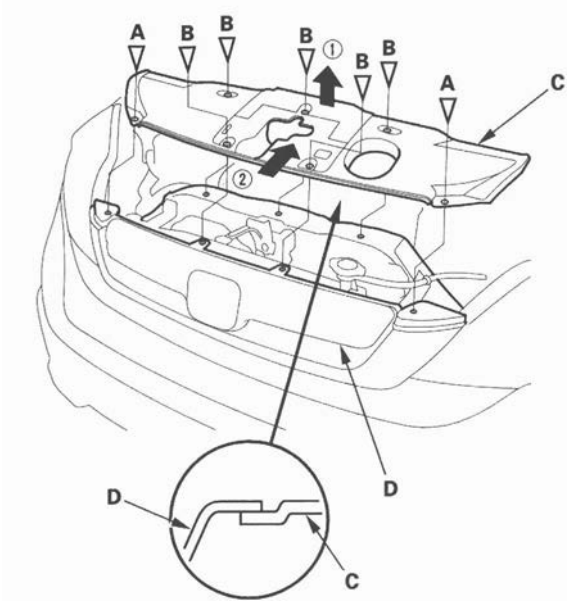

2. Install the cover in the reverse order of removal, and note these items:

   - Check if the clips are damaged or stress-whitened, and if necessary, replace them with new ones.
   - Push the clips and hooks into place securely.

A-Pillar Corner Trim Replacement

Special Tools Required
KTC trim tool set SOJATP2014 *
* Available through the American Honda Tool and Equipment Program; call 888-424-6857

NOTE:
- Put on gloves to protect your hands.
- Take care not to scratch the corner trim and body.
- Use the appropriate tool from the KTC trim tool set to avoid damage when prying components.

1. Open the front door.

2. Carefully insert a appropriate trim tool next to the upper clip, and detach the clip by prying on the A-pillar corner trim (A). Take care not to scratch the body and related parts.

Fastener Location

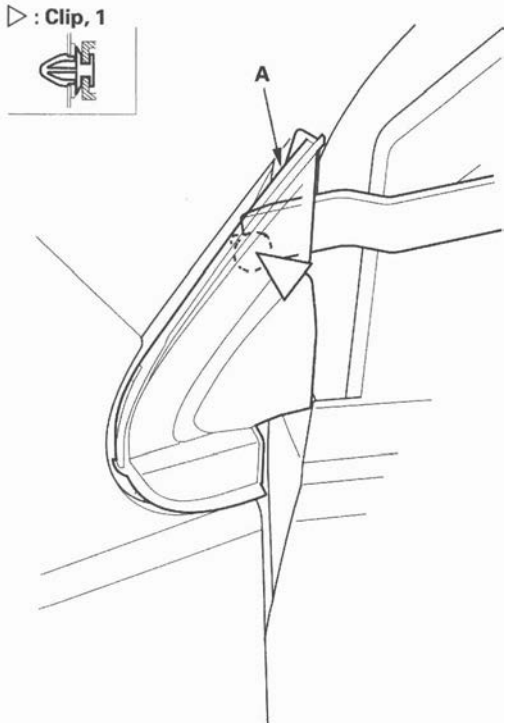

3. Pull the A-pillar corner trim (A) back by hand to detach remaining lower clips, then remove the trim.

Fastener Locations

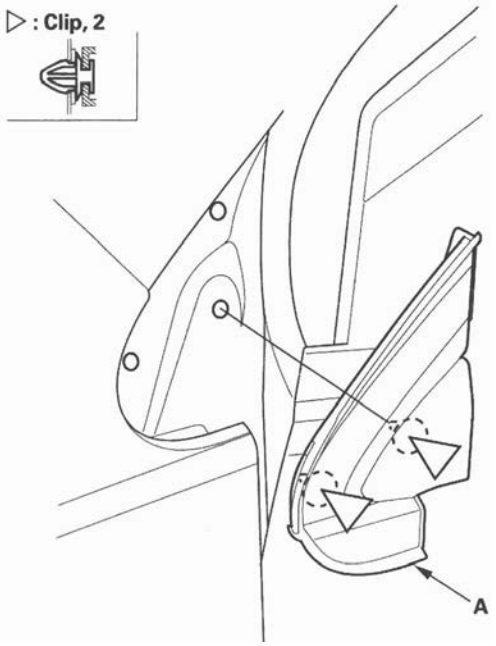

4. Install the trim in the reverse order of removal, and note these items:

   - Check if the clips are damaged or stress-whitened, and if necessary, replace them with new ones.
   - Push the clips into place securely.

Cowl Cover Replacement

Special Tools Required
KTC trim tool set SOJATP2014 *
* Available through the American Honda Tool and Equipment Program; call 888-424-6857

NOTE:
- Put on gloves to protect your hands.
- Take care not to scratch the cowl cover and body.
- Use the appropriate tool from the KTC trim tool set to avoid damage when prying components.

1. Remove these items:
   - Windshield wiper arms (see page 22-223)
   - Front fender trim, both sides (see page 20-165)

2. From both sides of the cowl cover, release the hooks (A) from the cowl cover (B) and the front fender (C), then release the hood hinge cover (D), then remove the covers.

Driver's side

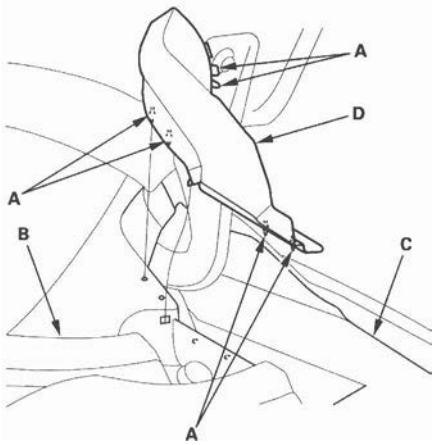

Passenger's side

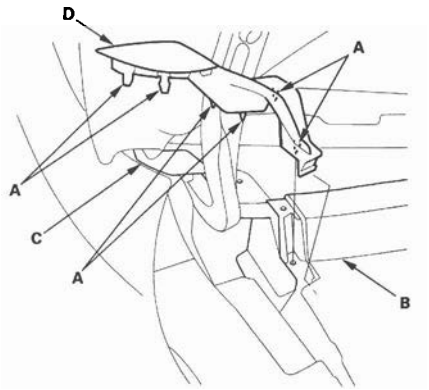

3. Remove the rear hood seal (A) by pulling it out. Using a clip remover, detach the clips from the cowl covers.

Fastener Locations
▷ : **Clip, 2**

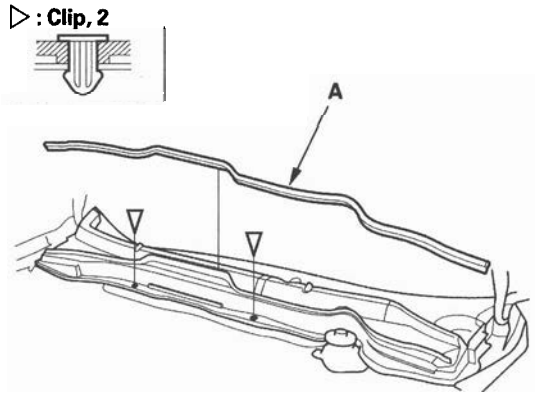

(cont'd)

Cowl Cover Replacement (cont'd)

4. Detach the clips (A) by carefully pulling the passenger's cowl cover (B) upward, and release the hook (C) on the passenger's cowl cover from the driver's cowl cover, then release the hooks (D) from the under cowl panel (E), disconnect the windshield washer tubes (F), and remove the passenger's cowl cover.

Fastener Locations
A, G▷ : Clip, 10

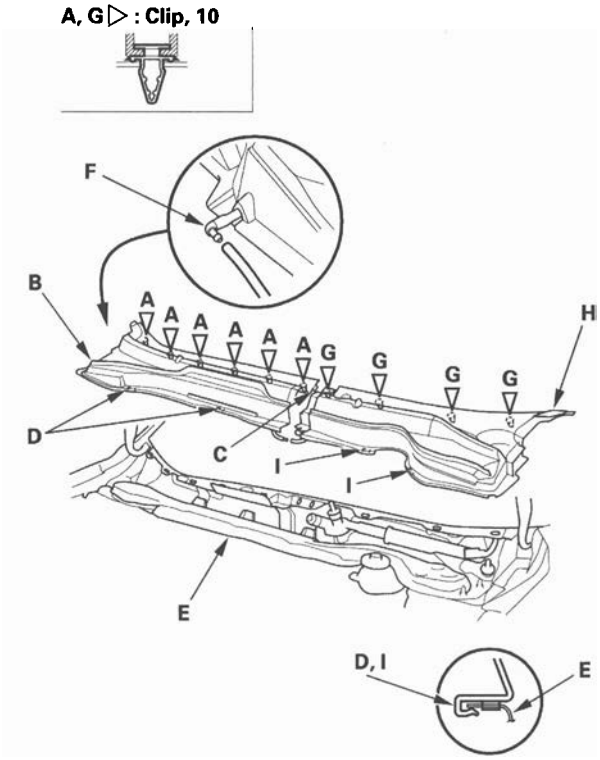

5. Detach the clips (G) by carefully pulling the driver's cowl cover (H) upward, then release the hooks (I) from the under cowl panel, and remove the driver's cowl cover.

6. Install the covers in the reverse order of removal, and note these items:

   - Make sure the washer tubes are connected securely.
   - Check if the clips are damaged or stress-whitened, and if necessary, replace them with new ones.
   - Push the clips and hooks into place securely.

Door Lower Trim Replacement

NOTE:
- Take care not to scratch the door.
- Put on gloves to protect your hands.

1. Remove these items:

   - Door panel, front (see page 20-6), rear (see page 20-17)
     Door speaker, front (see page 23-79), rear (see page 23-79).

2. From the front or the rear door, remove the screw.

Fastener Location
▶ : Screw, 1

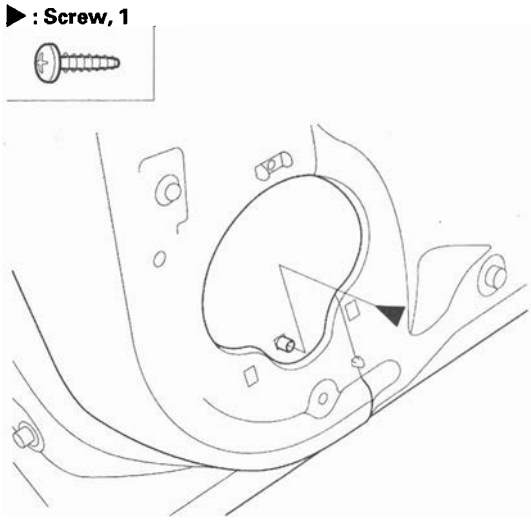

3. Using a utility knife, carefully cut the double-sided adhesive tape (A) along the edge of the door lower trim (B).

Front door

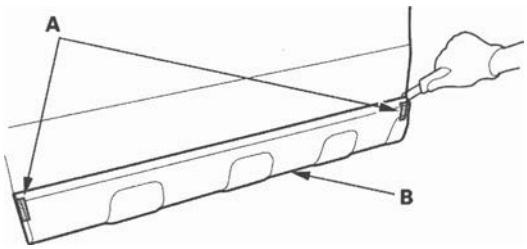

Rear door

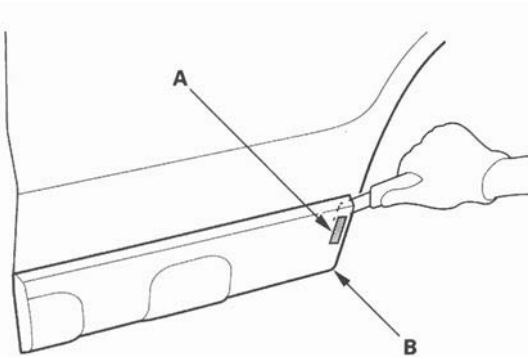

4. With the help of an assistant, slide the door lower trim (A) rearward, and remove it. The clips (B, C) stay in the body. Turn the clips (B) 45 ° counterclockwise, and remove them.

Front door

Fastener Locations

B ▷ : Clip, 9 C ▷ : Clip, 1

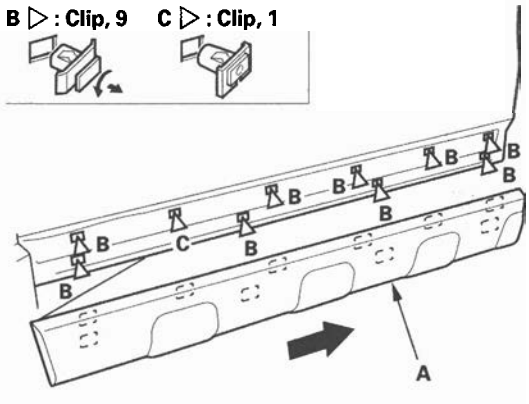

Rear door

Fastener Locations

B ▷ : Clip, 6 C ▷ : Clip, 1

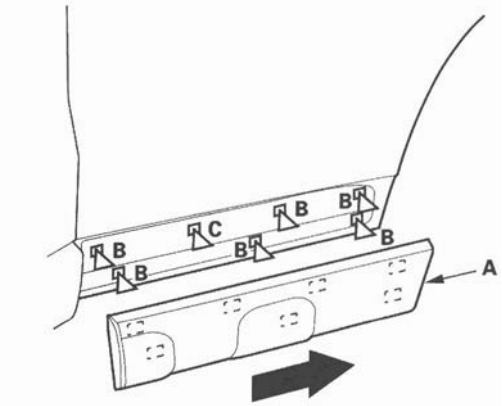

5. Check if the clips are damaged or stress-whitened, and if necessary, replace them with new ones.

6. Install the clips on the trim.

(cont'd)

Door Lower Trim Replacement (cont'd)

7. Scrape off the remaining double-sided adhesive tape from the trim and door, then clean the trim and door surfaces with a sponge dampened in isopropyl alcohol.

8. Apply primer to the area where the panel will be applied.

9. Attach the double-sided adhesive tape (A) to the trim (B), and fold the edge of each adhesive backing from the double-sided adhesive tape.

Front door

Adhesive tape: Thickness 1.2 mm (0.047 in.)
Width 10 mm (0.39 in.)

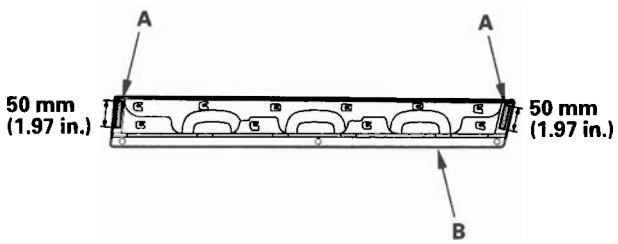

Rear door

Adhesive tape: Thickness 1.2 mm (0.047 in.)
Width 10 mm (0.39 in.)

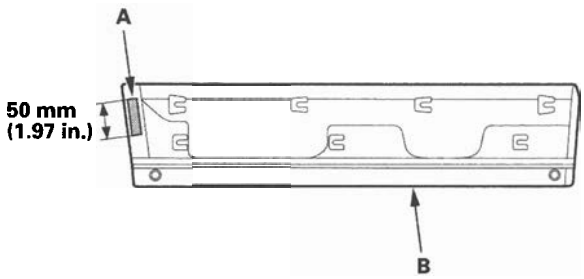

10. Hold the trim (A) up, and fit all the clips (B, C) into the holes in the door, then push on the trim until the clips snap into place.

Front door

Fastener Locations
B ▷ : Clip, 9 C ▷ : Clip, 1

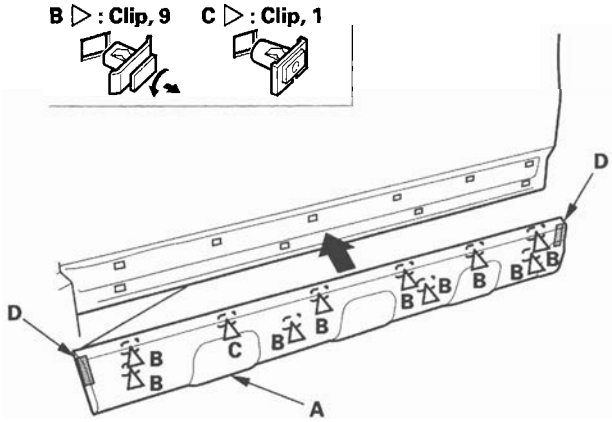

Rear door

Fastener Locations
B ▷ : Clip, 6 C ▷ : Clip, 1

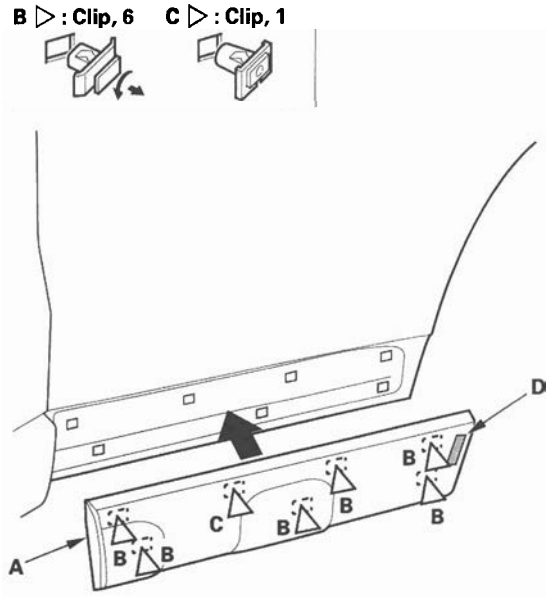

11. Carefully pull the adhesive backing (D) away, and push the trim into place securely.

12. Set the screw into the back of clip, then reinstall the door speaker and the door panel.

Side Windshield Trim Replacement

Special Tools Required
KTC trim tool set SOJATP2014 *
* Available through the American Honda Tool and Equipment Program; call 888-424-6857

NOTE:
- Put on gloves to protect your hands.
- Take care not to damage the windshield.
- Do not use any metallic tools to remove the roof molding, or you may chip the edge of the windshield and cause cracks in the windshield to occur.
- Use the appropriate tool from the KTC trim tool set to avoid damage when prying components.
- Take care not to bend the roof molding.

Molding Replacement

1. Using a trim tool, pry up on the front lid (A) of the front roof side trim to detach the hook (B), and remove the nut.

Fastener Location
● : Nut, 1

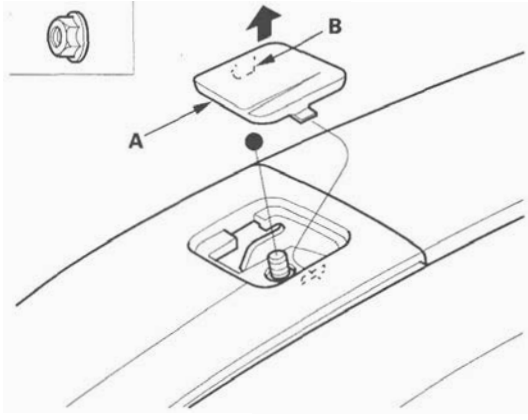

2. Remove the windshield portion of the roof molding (A).

-1 Carefully insert a plastic trim tool (B) under the molding next to the clip (C).
-2 While pulling the clip portion of the molding up by hand, push each of the six or eight small hooks (D) in the numbered sequence shown to release the clip from the retainer (E).
Do not try to pry up the clip even if it is hard to release from the retainer.
-3 Gradually work your way up to release each of the upper clips (F, G, H).

Fastener Locations
C, F ▷ : Orange
G, H ▷ : Green

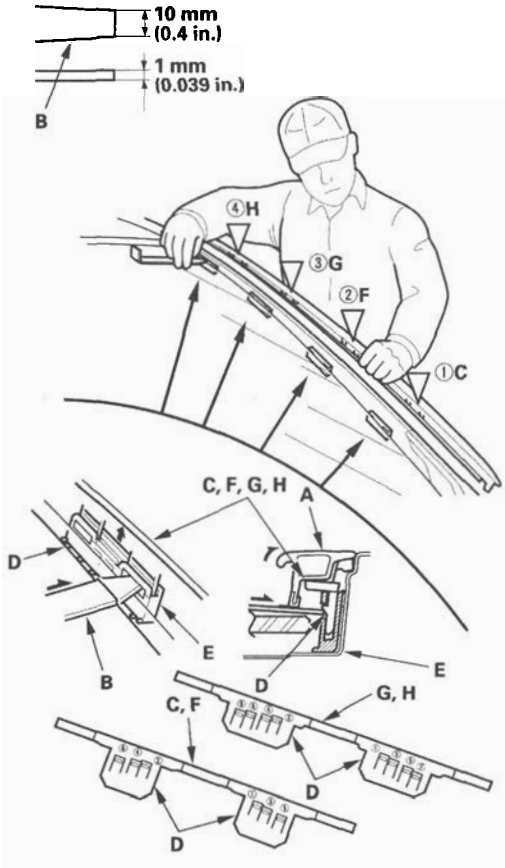

3. Install the molding in the reverse order of removal, and note these items:

- Check if the clips are damaged or stress-whitened, and if necessary, replace them with new ones.
- Make sure the trim is installed securely.

(cont'd)

Side Windshield Trim Replacement (cont'd)

Retainer Replacement

1. Carefully scrape off the adhesive tape (A) under the retainers (B, C) while heating it with a heat gun.

   NOTE:
   - Do not heat the painted body surface around the retainers too much.
   - To keep the exterior resin parts near the A-pillar from being overheated by the heat gun, wrap them with aluminum foil.

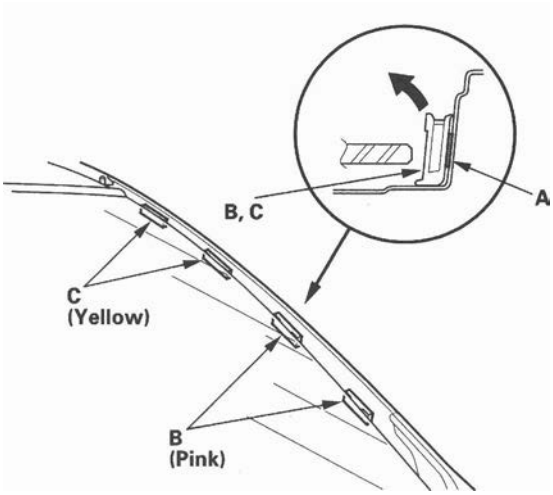

2. Clean the body bonding surface with a sponge dampened in isopropyl alcohol. After cleaning, keep oil, grease, and water from getting on the surface.

3. Install the upper retainers (A) and the lower retainers (B).

   1. Peel the adhesive backing away from the upper and lower retainers.
   2. Line up the retainers with the alignment marks (C) on the body, and attach the retainers with adhesive tape (D) (3M 9259, or equivalent).
   3. Apply epoxy two-part adhesive (E) around the edge of the retainers as shown.

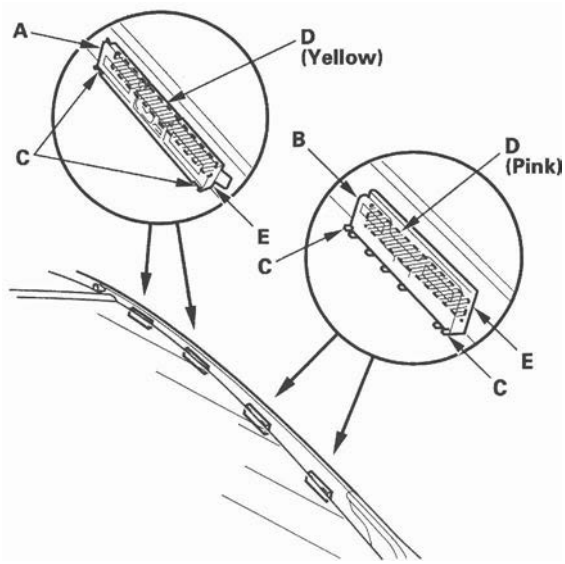

Front Roof Side Trim Replacement

Special Tools Required
KTC trim tool set SOJATP2014 *
* Available through the American Honda Tool and Equipment Program; call 888-424-6857

NOTE:
- Put on gloves to protect your hands.
- Use the appropriate tool from the KTC trim tool set to avoid damage when prying components.
- Take care not to bend the roof side trim.

1. Using a trim tool, pry up on the front lid (A) of the front roof side trim to detach the hook (B), and remove the nut.

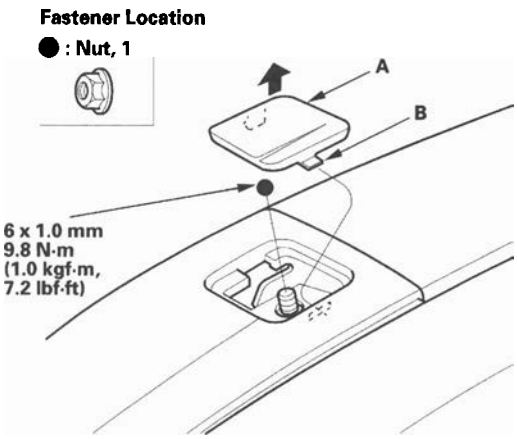

2. Using a trim tool, pry up on the middle lid (A) of the front roof side trim (B) to detach the hooks (C), and remove the nut.

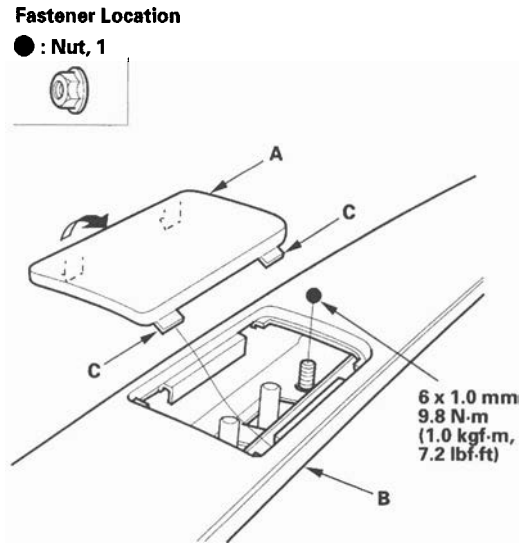

3. Using a trim tool, pry up on the rear lid (A) of the rear roof side trim (B) to detach the hooks (C), and remove the bolt.

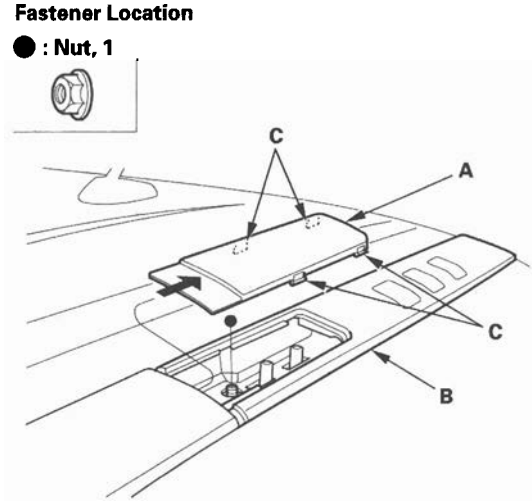

4. Pull up on the rear end of the front roof side trim (A), and remove the trim by pulling it rearward. Take care not to scratch the rear trim and/or body.

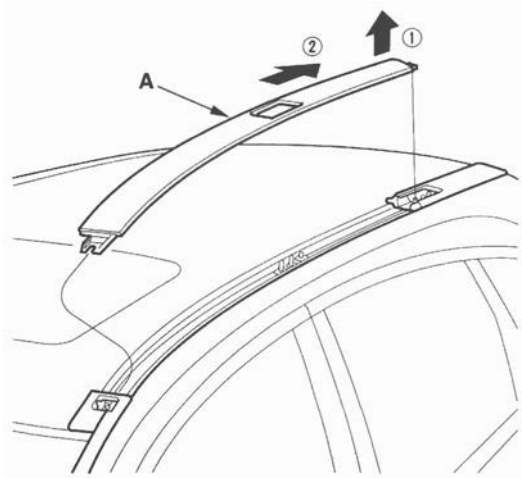

5. Install the trim in the reverse order of removal.

Rear Roof Side Trim Replacement

Special Tools Required
KTC trim tool set SOJATP2014 *
* Available through the American Honda Tool and Equipment Program; call 888-424-6857

NOTE:
- Put on gloves to protect your hands.
- Use the appropriate tool from the KTC trim tool set to avoid damage when prying components.
- Take care not to bend the roof side trim.

1. Remove the front roof side trim (see page 20-173).
2. Using a trim tool, pry up on the rear lid (A) of the rear roof side trim (B) to detach the hooks (C), and remove the nut.

Fastener Location
● : Nut, 1

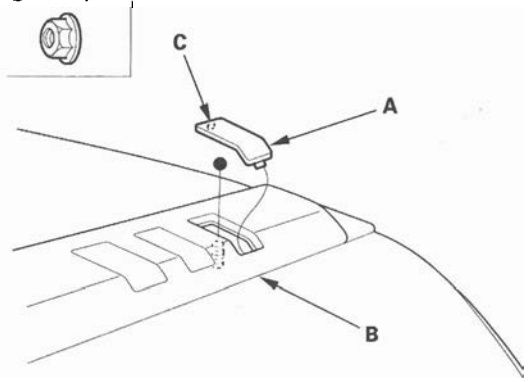

3. Pull up the rear roof side trim (A) and remove it. Take care not to scratch the body.

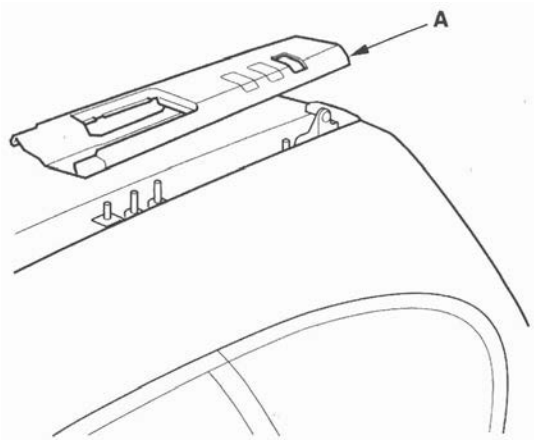

4. Install the trim in the reverse order of removal.

Upper Tailgate Trim Replacement

NOTE:
- Put on gloves to protect your hands.
- Take care not to scratch the tailgate.

1. Using a trim tool, detach the clip, then release the grommet (A) from the tailgate (B), and remove the tailgate upper trim (C).

Fastener Location

▷ : Clip, 1

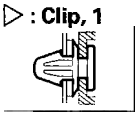

2. Install the trim in the reverse order of removal, and note these items:

   - Check if the clip is damaged or stress-whitened, and if necessary, replace them with new ones.
   - Push the clip into place securely.

Front Bumper Side Trim Replacement

NOTE:
- Take care not to scratch the body.
- Put on gloves to protect your hands.

1. Remove the screws (A) and clip (B) securing the front bumper side trim (C).

Fastener Locations
A ▶ : Screw, 2 B ▷ : Clip, 1

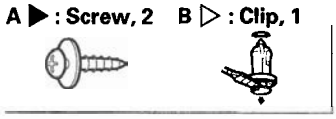

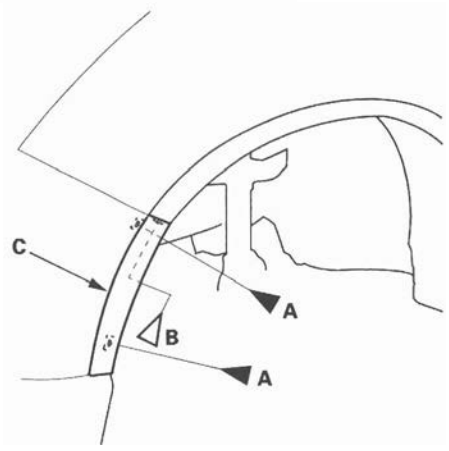

2. Pull out the front inner fender as needed. Take care not to bend the front inner fender excessively. Then push out the clips and remove the front bumper side trim.

Fastener Locations
▷ : Clip, 2

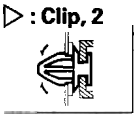

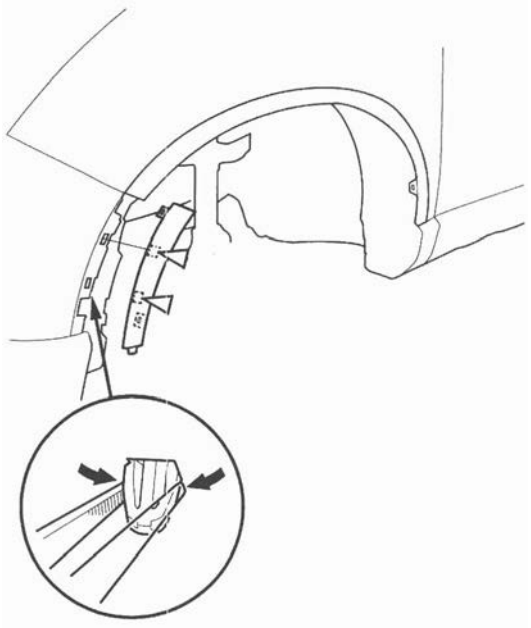

3. Install the trim in the reverse order of removal, and note these items:
   - Check if the clips are damaged or stress-whitened, and if necessary, replace them with new ones.
   - Push the clips and hooks into place securely.

Side Sill Panel Replacement

NOTE: Take care not to scratch the body.

1. Remove these items:
   - Front wheel arch protector, as needed (see page 20-185)
   - Rear wheel arch protector, as needed (see page 20-186)
2. Remove the side sill panel (A).
   1. Remove the screw (B) and the clips (C).
   2. Remove the screws (D), and pull the inner fender (E) back as necessary.
   3. Slide the side sill panel forward and remove it. The side clips (F) will stay in the body.

      NOTE: To remove the clip C, pry the inner pin up at the edge near the line (G) on its head.

Fastener Locations

B ▶ : Screw, 1 C ▷ : Clip, 4 D ▶ : Screw, 3 F ▷ : Clip, 9

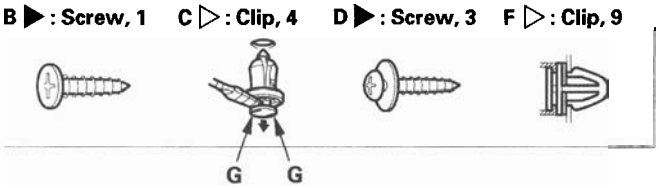

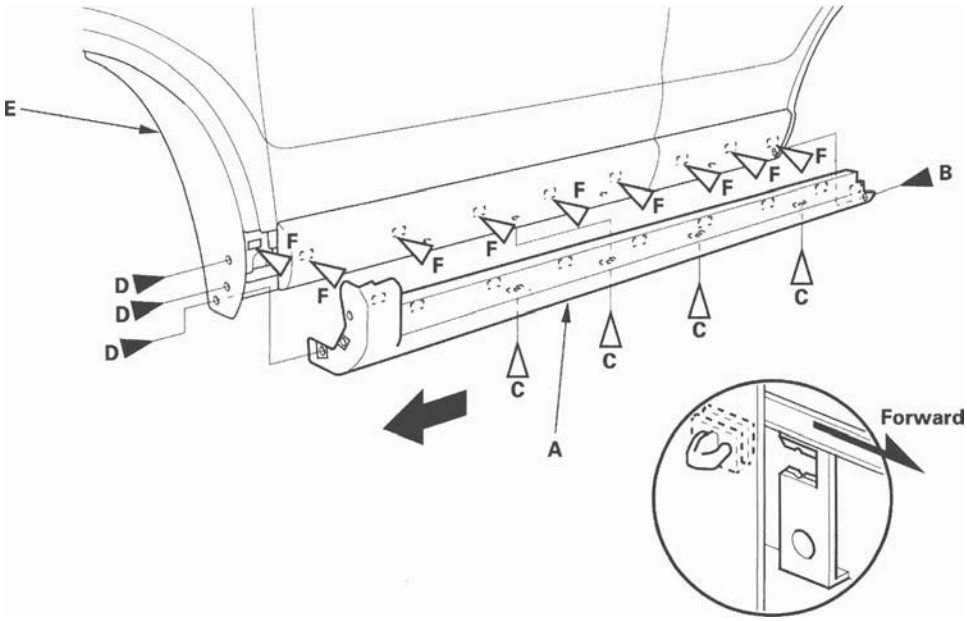

3. Check if the clips are damaged or stress-whitened, and if necessary, replace them with new ones.
4. Install the side clips on the side sill panel.
5. Hold the panel up, and fit all the side clips into the holes in the body, then push on the panel until the side clips snap into place.
6. Reinstall the front wheel arch protector and the rear wheel arch protector.

Rear License Trim Replacement

Special Tools Required
KTC trim tool set SOJATP2014 *
* Available through the American Honda Tool and Equipment Program; call 888-424-6857

NOTE:
- Put on gloves to protect your hands.
- Take care not to bend or scratch the trim and panels.
- Use the appropriate tool from the KTC trim tool set to avoid damage when prying components.

1. Remove the tailgate lower trim panel (see page 20-78).

2. From inside the tailgate, remove the bolt (A) and nuts (B) securing the rear license trim (C).

Fastener Locations
A ▶ : Bolt, 1 B ● : Nut, 2 D ▷ : Clip, 4

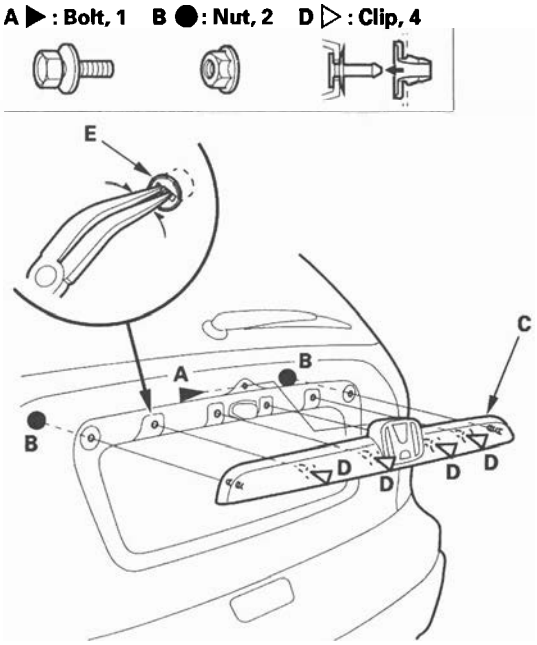

3. Pull out the rear license trim to release the clips (D), then remove the rear license trim from the tailgate.

4. Check if the clips are damaged or stress-whitened, and if necessary, replace them with new ones.

5. Remove the grommets (E) from the tailgate, then insert the grommets into the clips on the rear license trim.

6. Hold the trim up, and fit all the clips into the holes in the tailgate, then push on the trim until the clips snap into place.

7. Reinstall the bolts and nuts, then reinstall the rear license trim.

Tailgate Lower Trim Replacement

NOTE:
- Put on gloves to protect your hands.
- Take care not to scratch the tailgate.

1. Remove the tailgate lower trim panel (see page 20-78).

2. Remove the bolts (A) and nuts (B) securing the tailgate lower trim (C).

Fastener Locations

A ▶ : Bolt, 2 B ● : Nut, 2

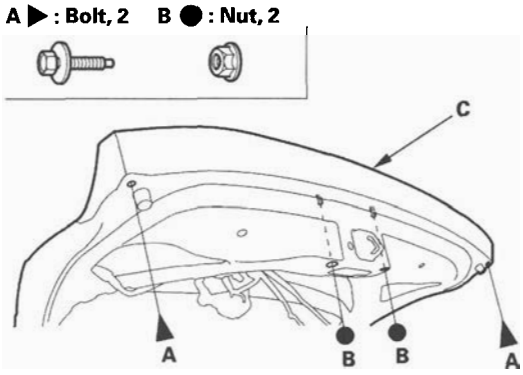

3. Pull out along the upper and lower edges on the tailgate lower trim (A) to release the clips, then remove the tailgate lower trim from the tailgate.

Fastener Locations

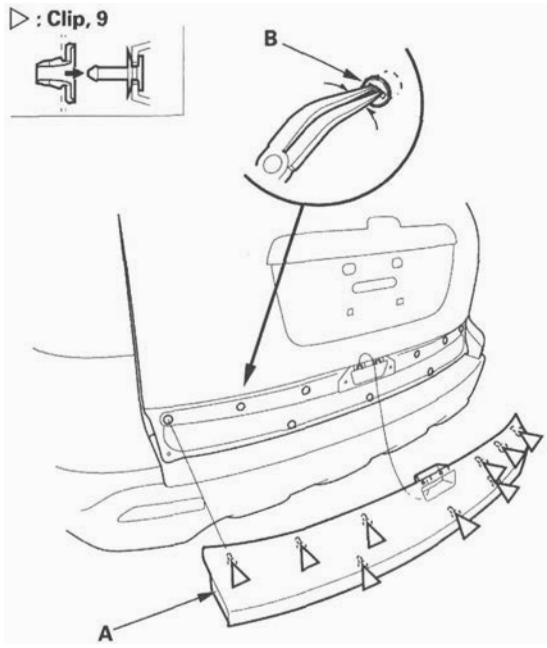

4. Check if the clips are damaged or stress-whitened, and if necessary, replace them with new ones.

5. Remove the grommets (B) from the tailgate, then insert the grommets into the clips on the tailgate lower trim.

6. Hold the trim up, and fit all the clips into the holes in the tailgate, then push on the trim until the clips snap into place.

7. Reinstall the bolts and nuts, then reinstall the tailgate lower trim panel.

Emblem/Sticker Replacement

NOTE: When removing the emblem/sticker, take care not to scratch the body.

1. To remove the front "H" emblem, remove the front upper grille (see page 20-163).
2. To remove the rear "H" emblem, remove the rear license trim (see page 20-178).
3. Clean the body surface with a sponge dampened in isopropyl alcohol. After cleaning, keep oil, grease, and water from getting on the surface.
4. Apply the emblems/sticker where shown. When installing the ULEV sticker on the inside surface of the left quarter glass, align the sticker with the edge of the black ceramic as shown, then press the sticker into place, and remove the application tape.
5. After installing the front "H" emblem, reinstall the front upper grille (see page 20-163).
6. After installing the rear "H" emblem, reinstall the rear license trim (see page 20-178).

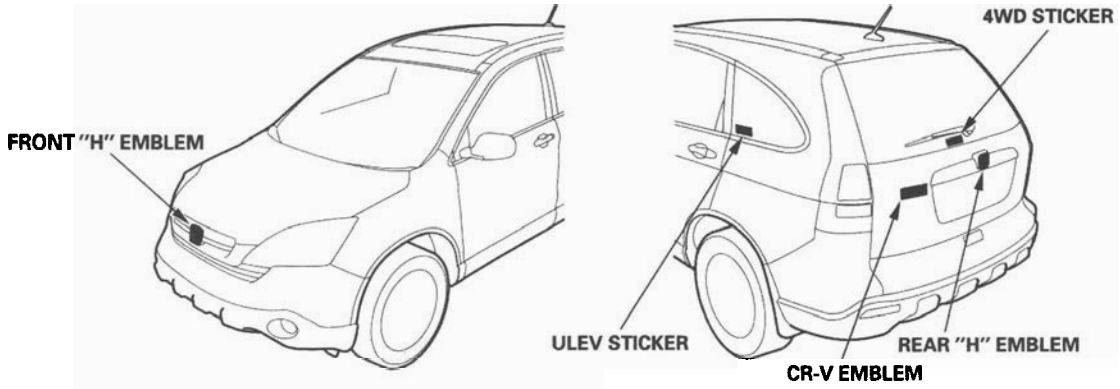

Unit: mm (in.)
Adhesive tape: Thickness 0.8 mm (0.03 in.)

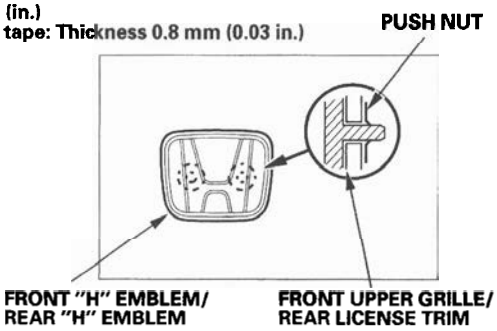

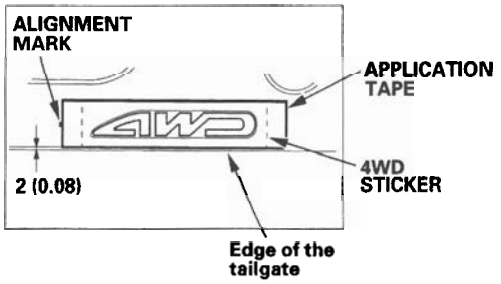

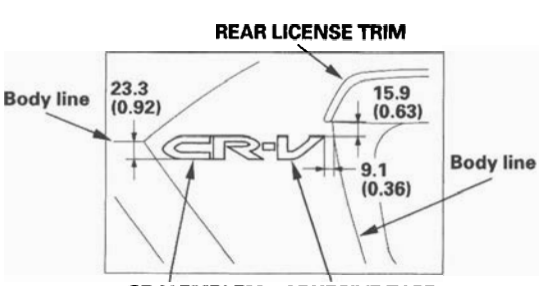

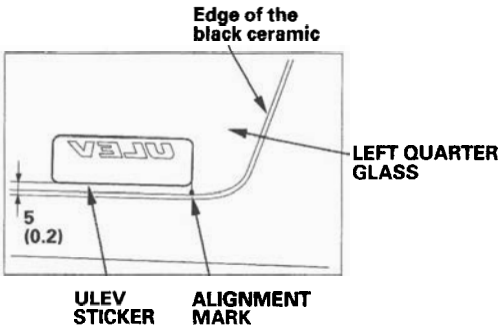

Front Inner Fender Replacement

NOTE: Take care not to scratch the body.

1. Remove the front wheel arch protector, as needed (see page 20-185).

2. Remove the front inner fender (A).

   -1 Remove the screws (B, C), and remove the bolt (D) securing the front bumper (E) and front inner fender.
   -2 Remove the clips (F, G) securing the front inner fender (and splash shield) on the body.

Fastener Locations

B ▶ : Screw, 2 C ▶ : Screw, 4 D ▶ : Bolt, 1 F ▷ : Clip, 6 G ▷ : Clip, 1

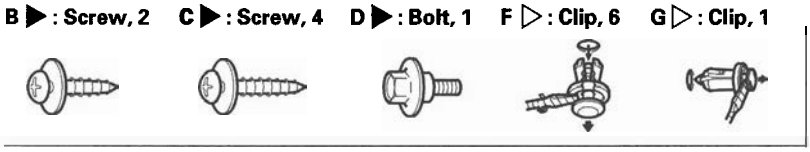

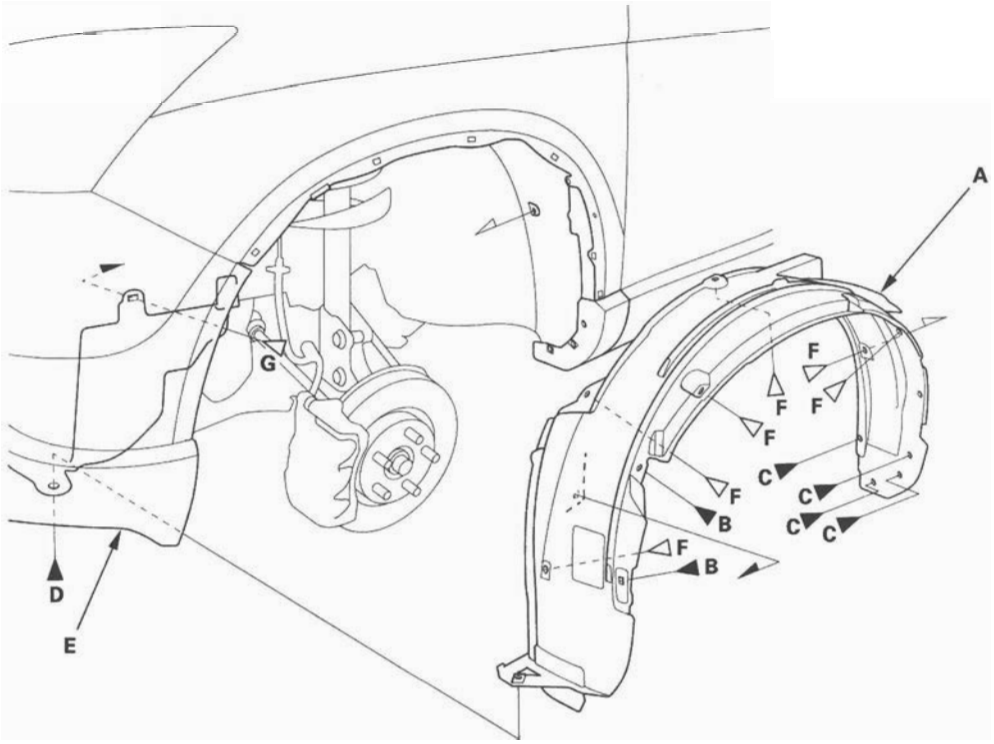

3. Install the inner fender in the reverse order of removal, and note these items:

   - Check if the clips are damaged or stress-whitened, and if necessary, replace them with new ones.
   - Push the clips into place securely.

Front Splash Shield Replacement

NOTE:
- Put on gloves to protect your hands.
- Take care not to scratch the body and related parts.

1. Remove the splash shield (A).

   -1 Remove the bolts (B), then remove the clips (C) that secure the front inner fender (D) and front splash shield to the body.
   -2 From under the front bumper (E), remove the clips (F, G).
   -3 From under the body, remove the clips (H).
   -4 Pull the splash shield out.

   NOTE: To remove the clips, pry the inner clip up at the edge near the line (I) on its head.

Fastener Locations
B ▶ : Bolt, 2 C, F ▷ : Clip, 6 G, H ▷ : Clip, 5

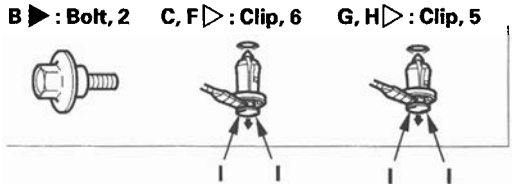

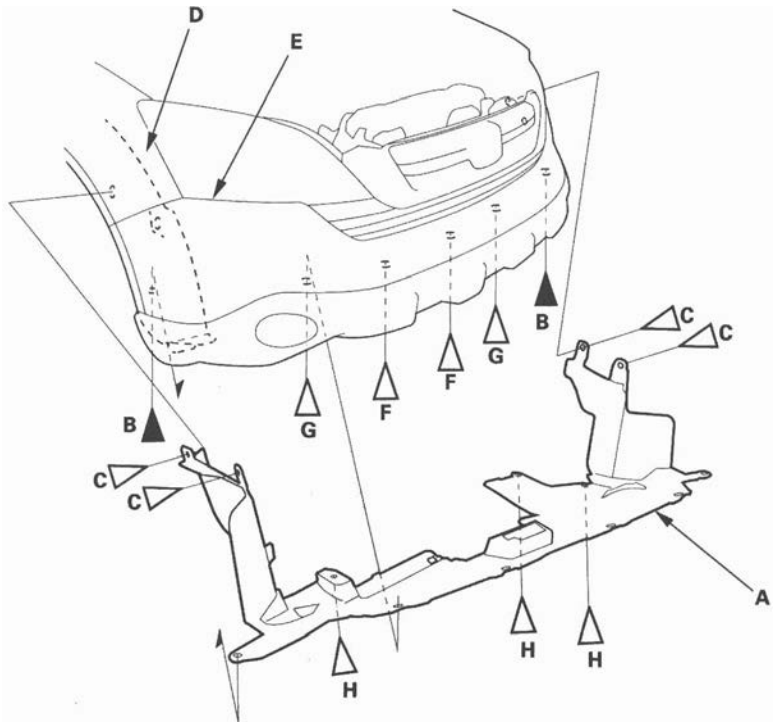

2. Install the splash shield in the reverse order of removal, and note these items:

   - Check if the clips is damaged or stress-whitened, and if necessary, replace them with new ones.
   - Push the clips into place securely.

Front Fender Fairing Replacement

1. Remove the front inner fender, as needed (see page 20-181).

2. Pull out and remove the front fender fairing (A).

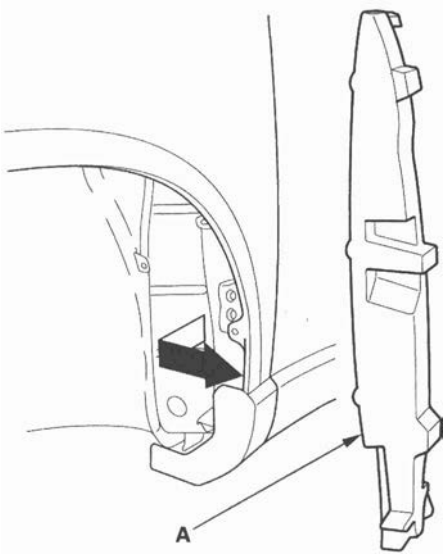

3. Install the fender fairing in the reverse order of removal.

Fuel Pipe Protector Replacement

NOTE:
- Take care not to scratch the body.
- Put on gloves to protect your hands.

1. Remove the left rear wheel (see page 18-32).

2. Remove the clips, then remove the fuel pips protector (A). Take care not to scratch the body.

Fastener Locations
▷ : Clip, 4

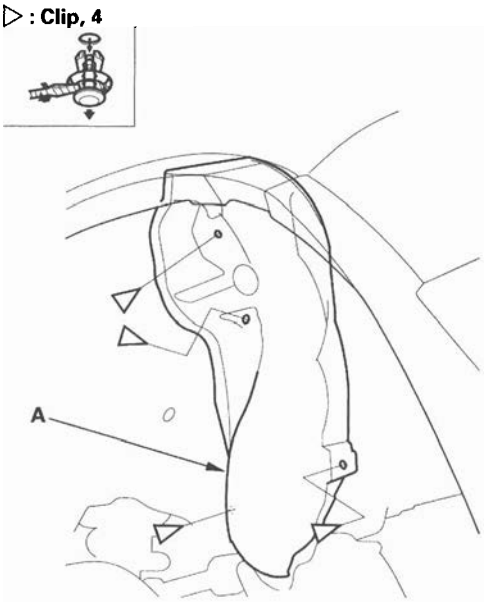

3. Install the protector in the reverse order of removal, and note these items:

   - Check if the clips are damaged or stress-whitened, and if necessary, replace them with new ones.
   - Push the clips into place securely.

Rear Splash Guard Replacement

NOTE: Take care not to scratch the rear bumper and body.

1. Remove the screws, then remove the rear splash guard (A) from the rear bumper (B) and body.

Fastener Locations
▶ : Screw, 4

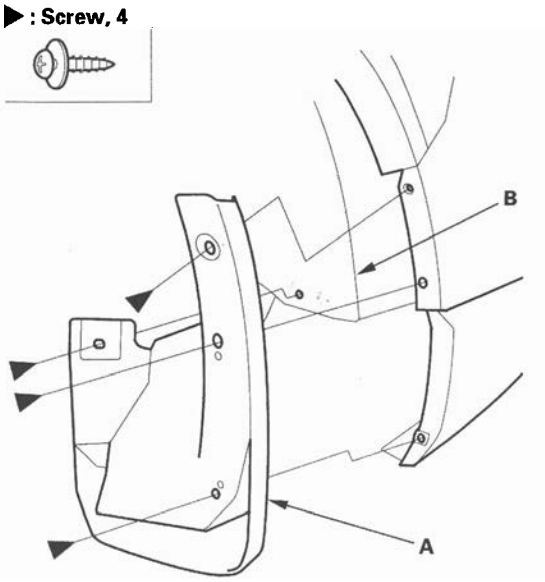

2. Install the splash guard in the reverse order of removal.

Front Wheel Arch Protector Replacement

Special Tools Required
KTC trim tool set SOJATP2014 *
* Available through the American Honda Tool and Equipment Program; call 888-424-6857

NOTE:
- Use the appropriate tool from the KTC trim tool set to avoid damage when prying components.
- Take care not to scratch the body.
- Put on gloves to protect your hands.

1. Remove the screws (A) and clip (B) securing the front wheel arch protector (C).

Fastener Locations
A ▶ : Screw, 2 B ▷ : Clip, 1

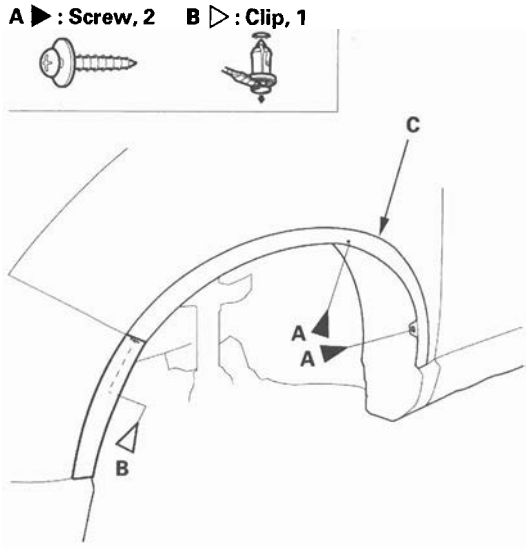

2. In the sequence shown, start at each end and work to the middle of the wheel arch, prying the clip portions of the wheel arch protector up with a trim tool to detach the clips and separate the double-sided adhesive tape (A).

NOTE: Take care not to damage paint around a clip hole in the rear outside panel during clip removal. If paint is damaged, repair it with touch-up paint to ensure corrosion protection.

Fastener Locations
▷ : Clip, 6

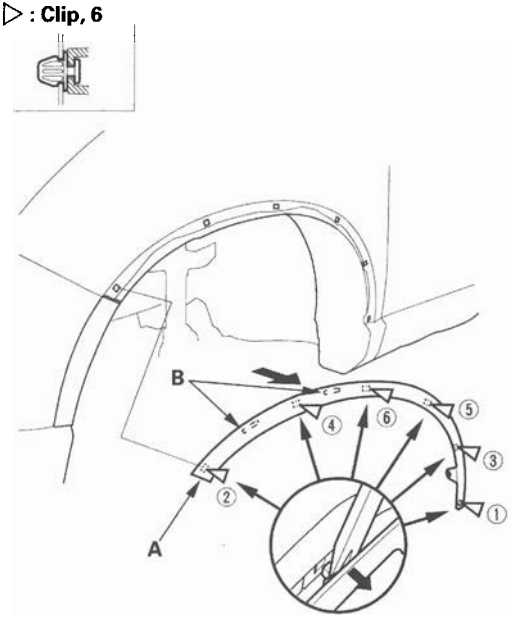

3. Check if the clips are damaged or stress-whitened, and if necessary, replace them with new ones.

4. Scrape off the remaining double-sided adhesive tape from the body, then clean the body surfaces with a sponge dampened in alcohol.

5. If the spacers (B) are removed, scrape off the remaining double-sided adhesive tape from the protector, then clean the protector surfaces with a sponge dampened in alcohol.

(cont'd)

Front Wheel Arch Protector Replacement (cont'd)

6. Apply the primer to the ares where the adhesive tape will be applied. Then attach the double-sided adhesive tape (A) to the spacers (B), and peel the adhesive backing away from the spacers.

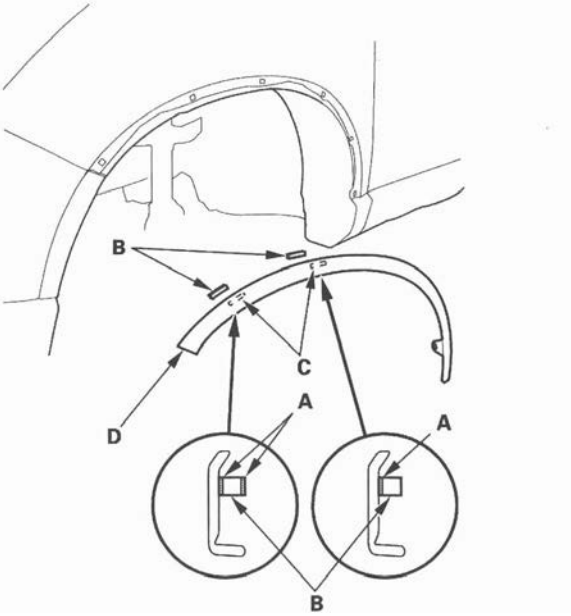

7. Line up the spacers with the alignment marks (C) on the protector (D), and attach them with adhesive tape.

8. Hold the protector up, push the adhesive portions and clips into place securely.

9. Reinstall the bolts and clip.

Rear Wheel Arch Protector Replacement

Special Tools Required
KTC trim tool set SOJATP2014 *
* Available through the American Honda Tool and Equipment Program; call 888-424-6857

NOTE:
- Use the appropriate tool from the KTC trim tool set to avoid damage when prying components.
- Take care not to scratch the body.
- Put on gloves to protect your hands.

1. Remove the screws securing the rear wheel arch protector (A).

Fastener Locations
▶ : Screw, 2

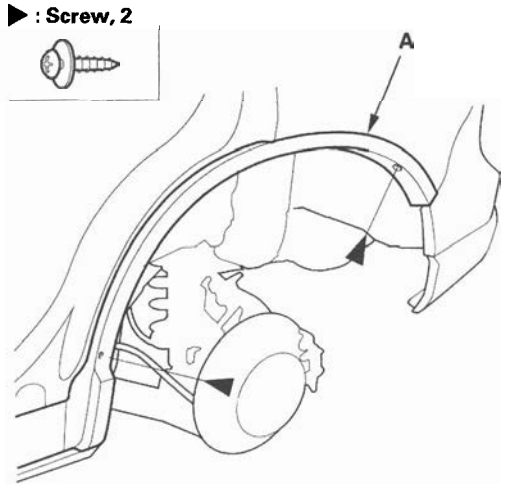

2. In the sequence shown, start at each end and work to the middle of the wheel arch, prying the clip portions of the wheel arch protector up with a trim tool to detach the clips.

   NOTE: Take care not to damage paint around a clip hole in the rear outside panel during clip removal. If paint is damaged, repair it with touch-up paint to ensure corrosion protection.

Fastener Locations

▷ : Clip, 6

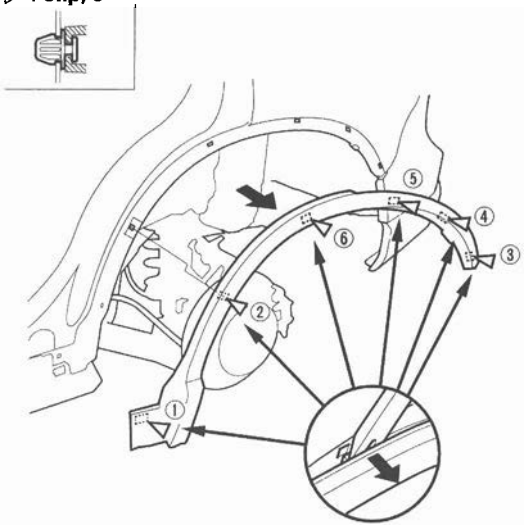

3. Install the protector in the reverse order of removal, and note these items:

   - Check if the clips are damaged or stress-whitened, and if necessary, replace them with new ones.
   - Push the clips into place securely.

Rear Strake Replacement

1. Remove the clip (A) and screw (B) from the body, and remove the screw (C) from the side sill panel (D), then remove the rear strake (E) from the body.

Fastener Locations

A ▷ : Clip, 1 B ▶ : Screw, 1 C ▶ : Screw, 1

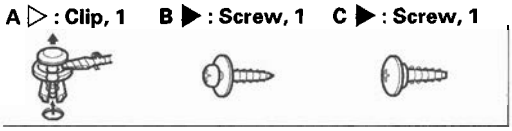

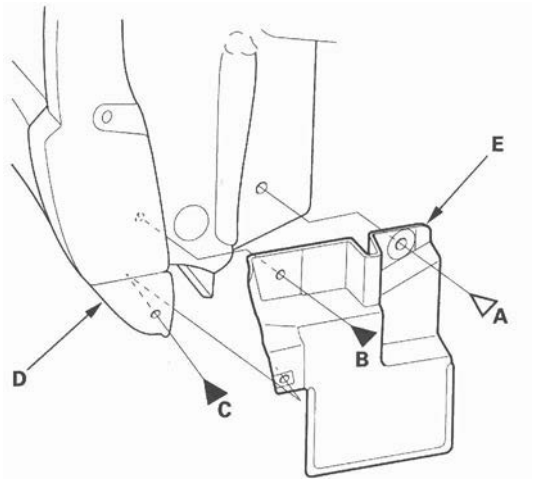

2. Install the strake in the reverse order of removal, and note these items:

   - Check if the clips are damaged or stress-whitened, and if necessary, replace them with new ones.
   - Push the clips into place securely.

Rear Air Outlet Replacement

1. Remove the rear bumper (see page 20-151).
2. Detach the hooks (A), then remove the rear air outlet (B). Take care not to scratch the body.

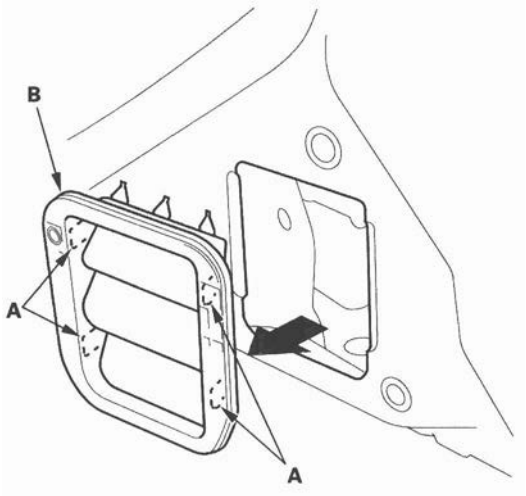

3. Install the air outlet by pushing on the hook portions until the hooks snap into place.

Middle Under-floor Cover Replacement

NOTE: Take care not to scratch the body.

1. Remove the clips (A) and bolts (B), then remove the left middle under-floor cover (C) and right middle under-floor cover (D).

Fastener Locations

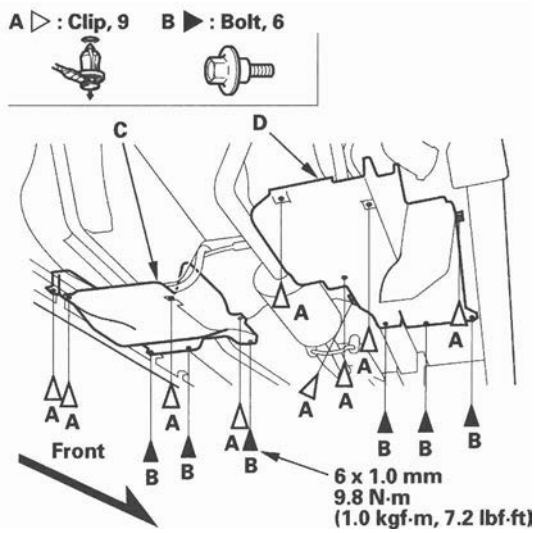

2. Install the cover in the reverse order of removal, and note these items:
   - Check if the clips are damaged or stress-whitened, and if necessary, replace them with new ones.
   - Push the clips into place securely.

Component Location Index

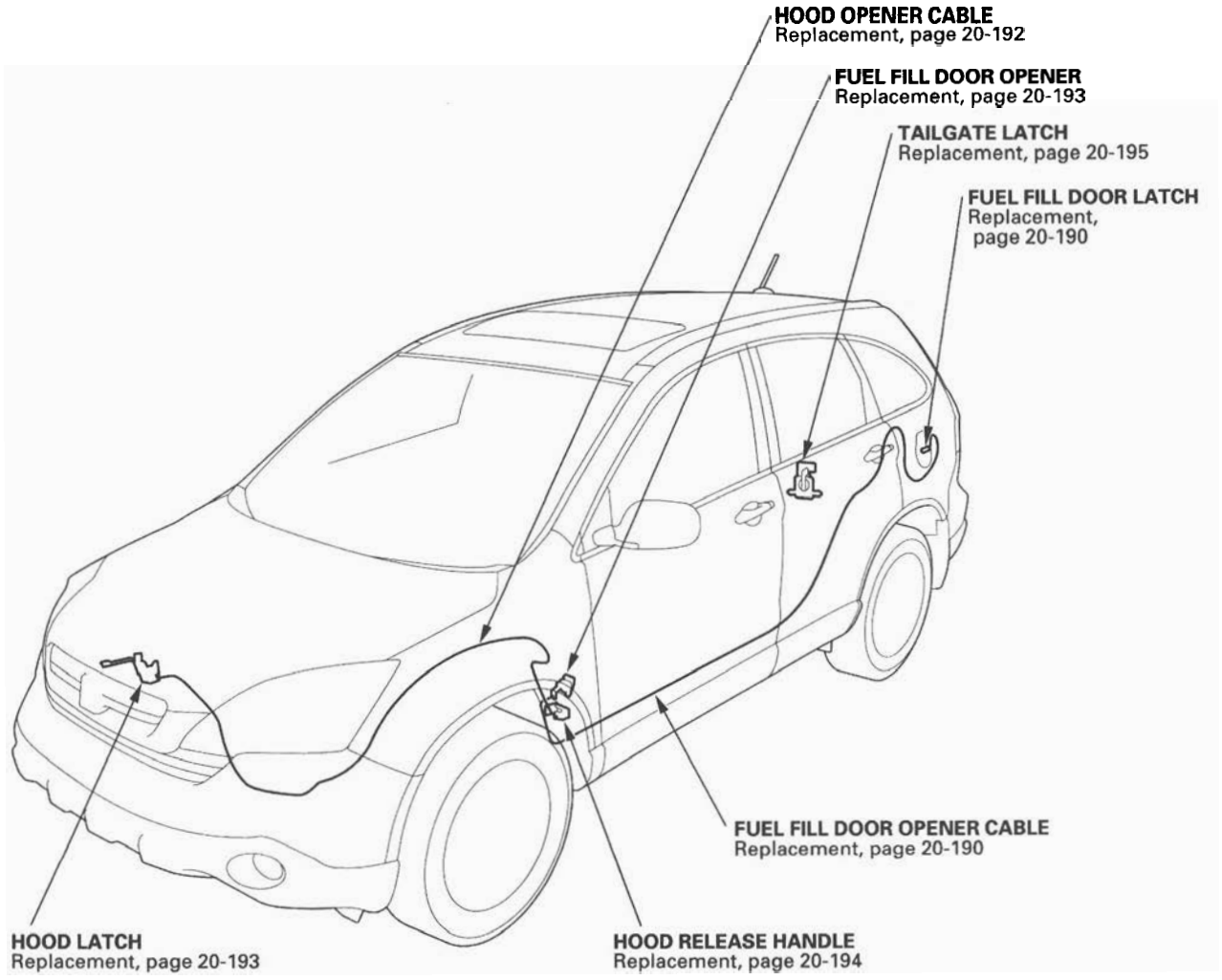

Fuel Fill Door Opener Cable Replacement

SRS components are located in this area. Review the SRS component locations (see page 24-13) and the precautions and procedures (see page 24-15) before doing repairs or service.

NOTE:
- Put on gloves to protect your hands.
- Take care not to scratch the body and related parts.

1. Remove these items from the vehicle:
   - Rear seat (see page 20-135)
   - Front door sill trim, driver's sides (see step 1 on page 20-67)
   - Kick panels, driver's sides (see page 20-67)
   - Rear door sill trim, driver's side (see page 20-68)
   - B-pillar lower trim, driver's side (see page 20-72)
   - Cargo area side trim panel, left side (see step 4 on page 20-76)
   - Fuel fill door opener (see page 20-193)
2. Pull the carpet back as needed.
3. Disconnect the fuel fill door opener cable from the fuel fill door opener (see step 3 on page 20-193).
4. Remove the cushion tape (A), and remove the fuel fill door opener cable (B) from the clips (C, D). Using a clip remover, detach the clips (E).

Fastener Locations

A ▷ : Cushion tape, 1 C ▷ : Clip, 6 D ▷ : Clip, 1

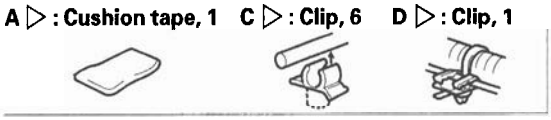

E ▷ : Clip, 1

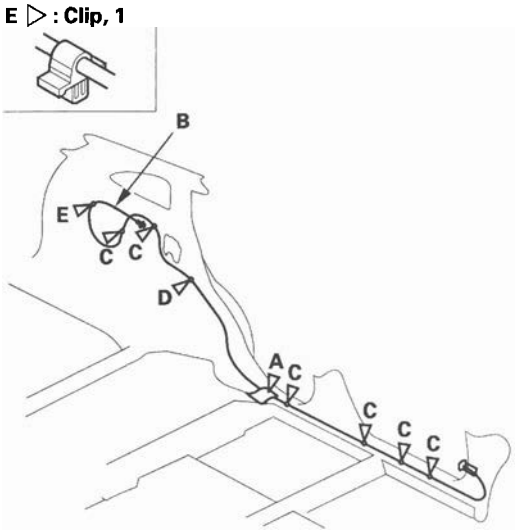

5. Remove the fuel fill door latch (A) from the body by turning it 90 °.

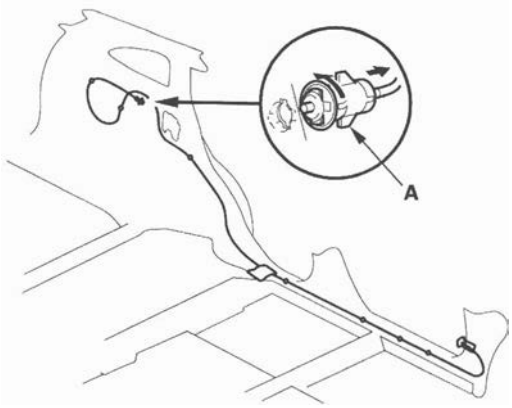

6. Install the opener cable in the reverse order of removal, and note these items:

- Align the marks (A) on the opener cable (B) with the cable clips (C) as shown.
- Route the opener cable under the hood opener cable (D) and floor wire harness (E).
- Replace any damaged clips, and replace the cushion tape.
- Make sure the fuel fill door opens properly and locks securely.

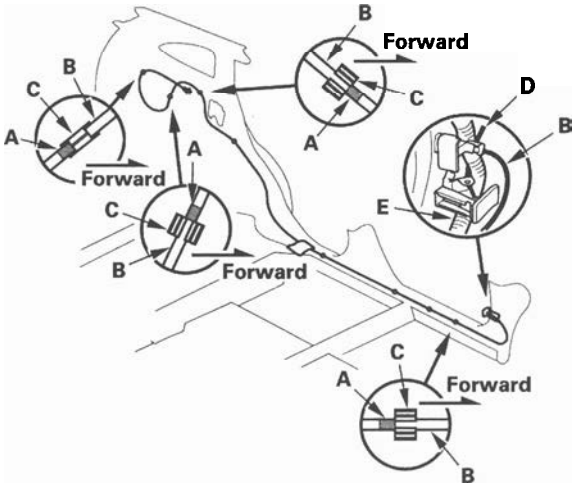

Hood Opener Cable Replacement

NOTE:
- Put on gloves to protect your hands.
- Take care not to scratch the body and related parts.

1. Remove these items:
   - Front bulkhead cover (see page 20-165)
   - Front inner fender (see page 20-181)
   - Kick panel (see page 20-67)
   - Front bumper, as needed (see page 20-149)

2. Disconnect the hood opener cable (A) from the hood latch (B) (see page 20-193), then remove the hood release handle (C) (see page 20-194). Take care not to kink the cable.

Fastener Locations
D ▷ : Clip, 5 E ▷ : Clip, 2

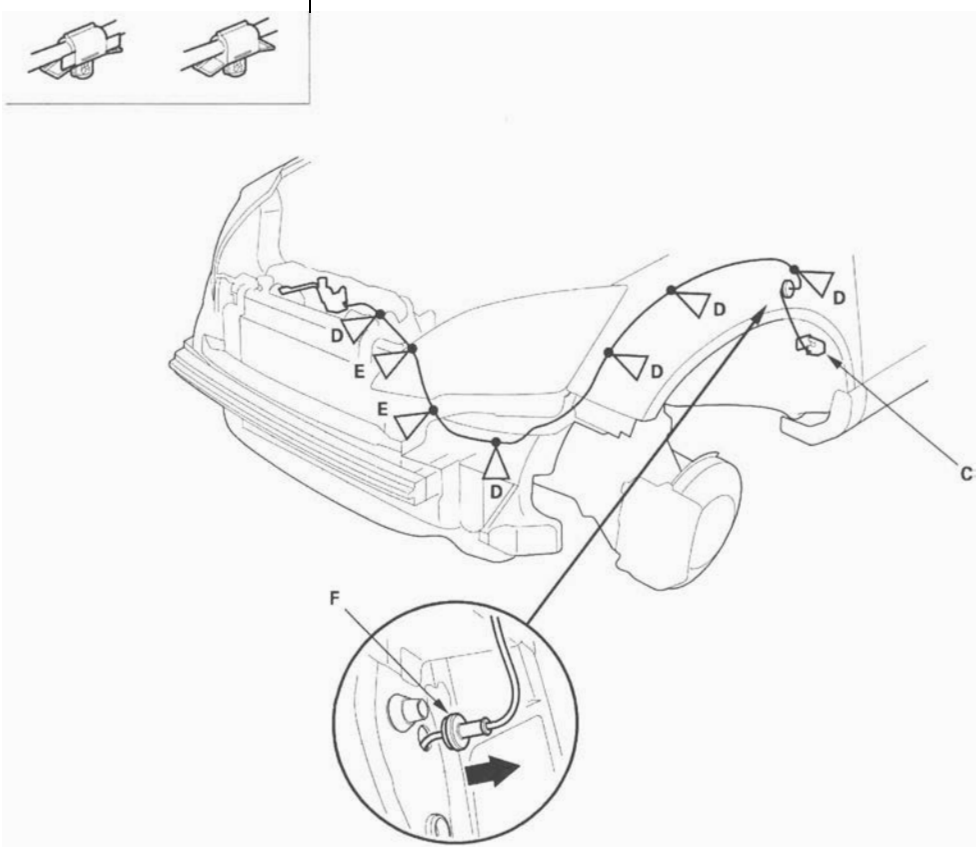

3. Using a clip remover, detach the clips (D, E) and remove the grommet (F) from the body, then remove the hood opener cable from the vehicle. Take care not to kink the cable.

4. Install the cable in the reverse order of removal, and note these items:
   - Check if the clips are damaged or stress-whitened, and if necessary, replace them with new ones.
   - Route the cable through the hole in the body.
   - Make sure the hood opens properly and locks securely.

Fuel Fill Door Opener Replacement

1. Remove the kick panel, left side (see page 20-67).
2. Remove the bolts, then remove the fuel fill door opener (A).

Fastener Locations

▶ : Bolt, 2

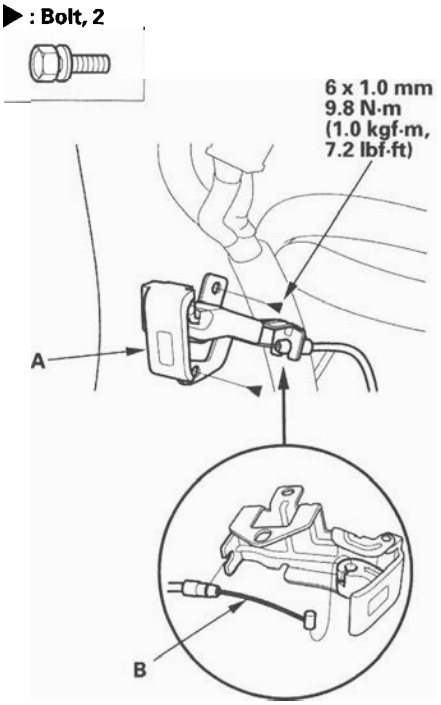

3. Disconnect the fuel fill door opener cable (B) from the fuel fill door opener. Take care not to kink the cable.
4. Install the fuel fill door opener in the reverse order of removal, and note these items:
   - Make sure the fuel fill door opener cable is connected properly.
   - Make sure the fuel fill door opens properly.

Hood Latch Replacement

1. Remove the front bulkhead cover (see page 20-165).
2. With hood latch switch: Remove the clip (A), then disconnect and detach the hood latch switch connector (B).

Fastener Locations

▶ : Bolt, 3

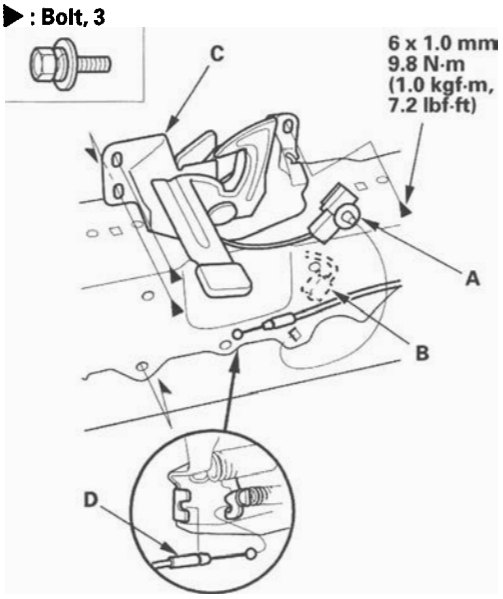

3. Remove the bolts, then remove the hood latch (C) from the body, and disconnect the hood opener cable (D) from the hood latch.

(cont'd)

Hood Latch Replacement (cont'd)

4. Install the latch in the reverse order of removal, and note these items:

   - Apply multipurpose grease to each location of the hood latch indicated by the arrows.
   - Make sure the hood opener cable is connected properly and hood latch switch connector is plugged in properly (for some models).
   - Adjust the hood latch alignment (see step 4 on page 20-155).
   - Make sure the hood opens properly and locks securely.

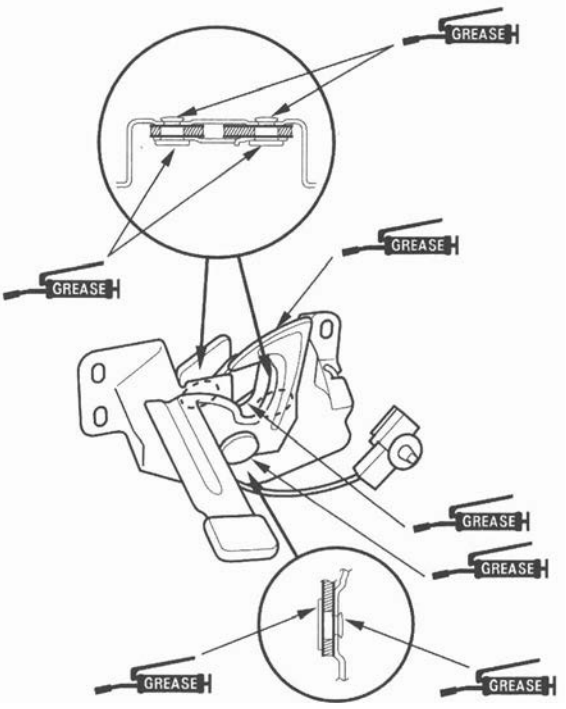

Hood Release Handle Replacement

1. Remove the kick panel (see page 20-67).

2. Remove the bolt, then remove the hood release handle (A).

Fastener Location

▶ : Bolt, 1

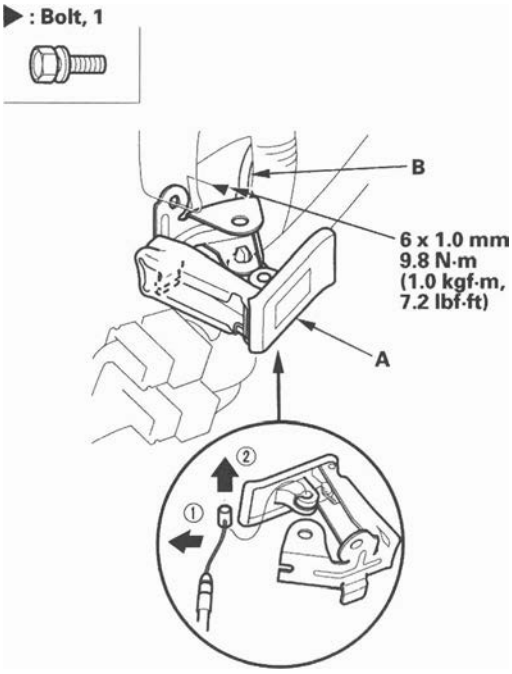

3. Disconnect the hood opener cable (B) from the hood release handle. Take care not to kink the cable.

4. Install the hood release handle in the reverse order of removal, and note there items:

   - Make sure the hood opener cable is connected properly.
   - Make sure the hood opens properly.

Tailgate Latch Replacement

NOTE:
- Put on gloves to protect your hands.
- If the tailgate latch doesn't open by pulling the tailgate handle, remove the maintenance lid from the tailgate lower trim panel, then turn the emergency lever (A) clockwise as shown.

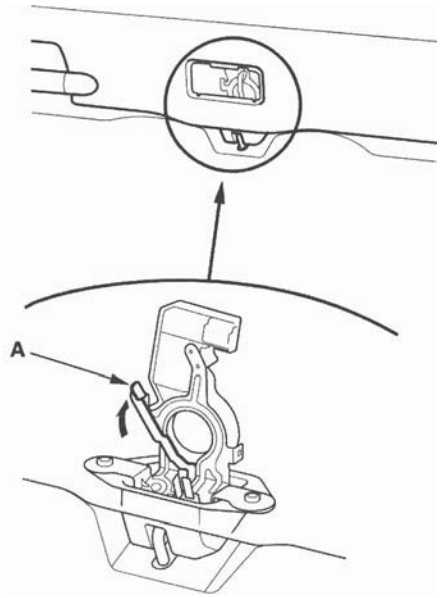

1. Remove the tailgate lower trim panel (see page 20-179).

2. Disconnect the actuator connector (A) and latch switch connector (B), then remove the bolts.

Fastener Locations
▶ : Bolt, 2

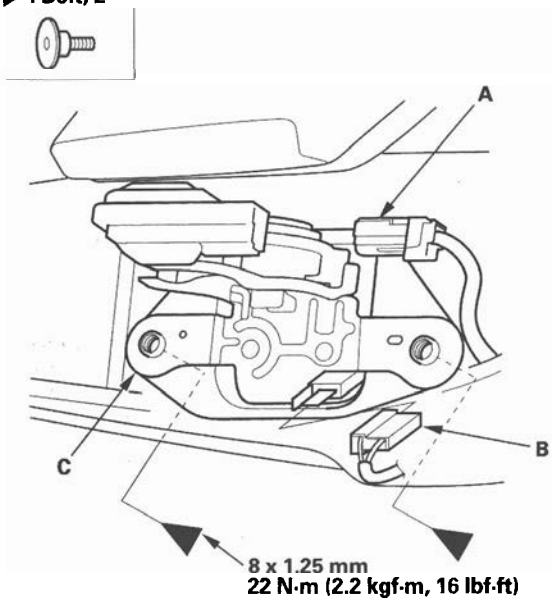

3. Pull the tailgate latch (C) out, then remove the latch.

4. Install the latch in the reverse order of removal, and note these items:

   - Make sure the connectors are plugged in properly.
   - Make sure the tailgate opens properly and locks securely.

Under-cowl Panel Replacement

NOTE: Take care not to scratch the body.

1. Remove these items:
   - Windshield wiper arms (see page 22-219)
   - Front fender trim, both sides (see page 20-165)
   - Cowl covers (see page 20-167)

2. Remove the bolts and nuts, disconnect the connector (A) and remove the grommet (B), then remove the under-cowl panel (C).

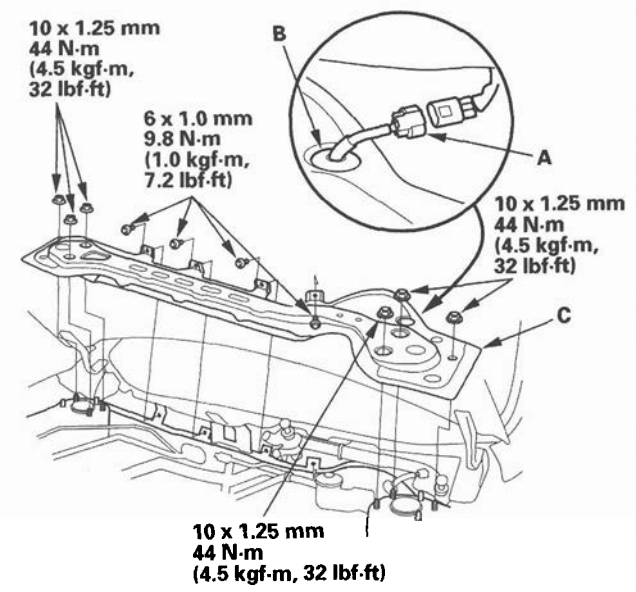

3. Install the under-cowl panel in the reverse order of removal.

Upper Dashboard Support Gusset Replacement

Upper Dashboard Support Gusset Torque

NOTE: Take care not to scratch the body.

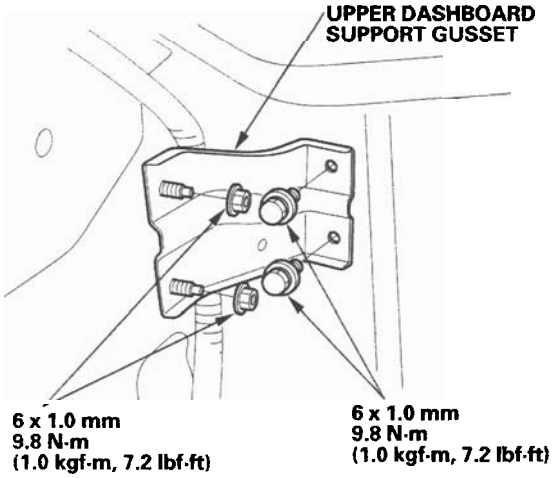

Rear Damper Gusset Replacement

Rear Damper Gusset Torque

NOTE: Take care not to scratch the body.

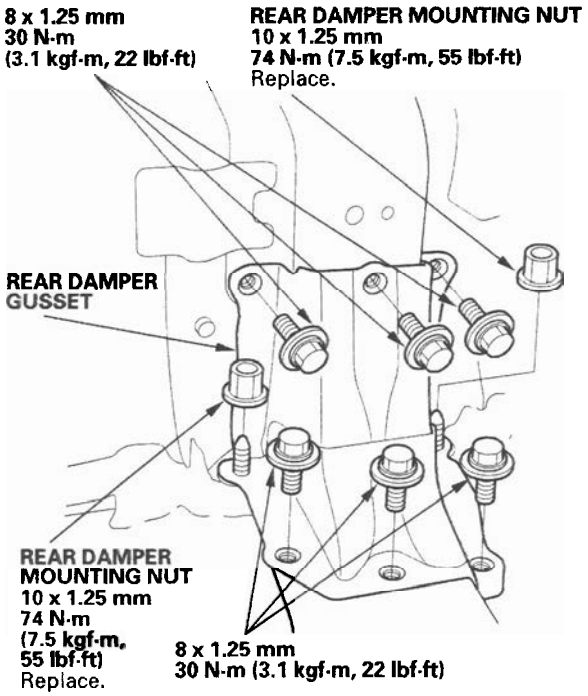

Subframe Replacement

Front Subframe Torque

NOTE:
- After loosening the subframe mounting bolts, be sure to replace them with new ones.
- When installing, align both installation reference holes in the subframe with both reference holes in the body using a screwdriver or tapered punch as a guide.

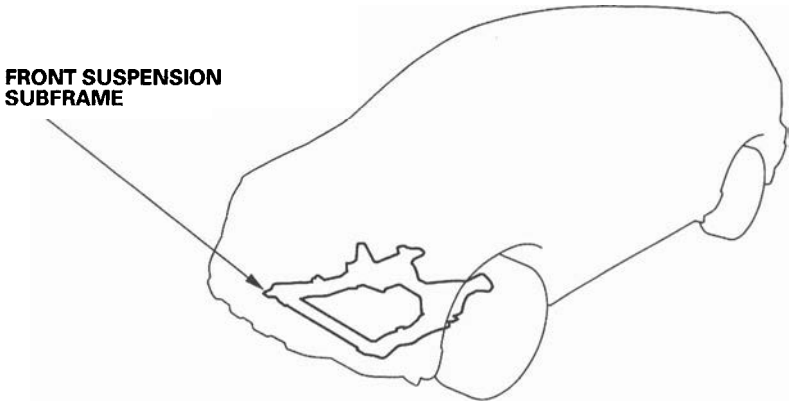

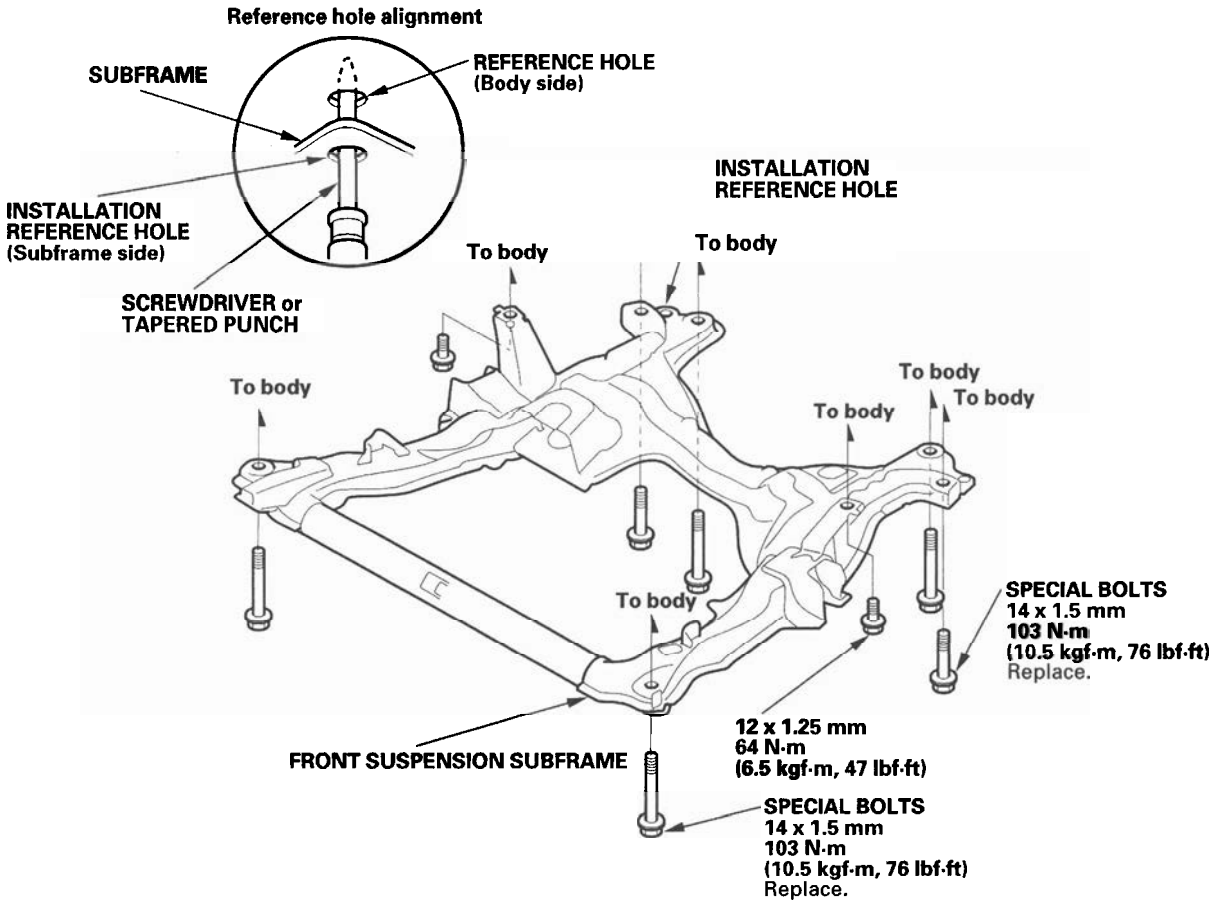

Rear Subframe Torque

NOTE:
- After loosening the subframe mounting bolts, be sure to replace them with new ones.
- When installing, align both installation reference holes in the subframe with both reference holes in the body using a screwdriver or tapered punch as a guide.

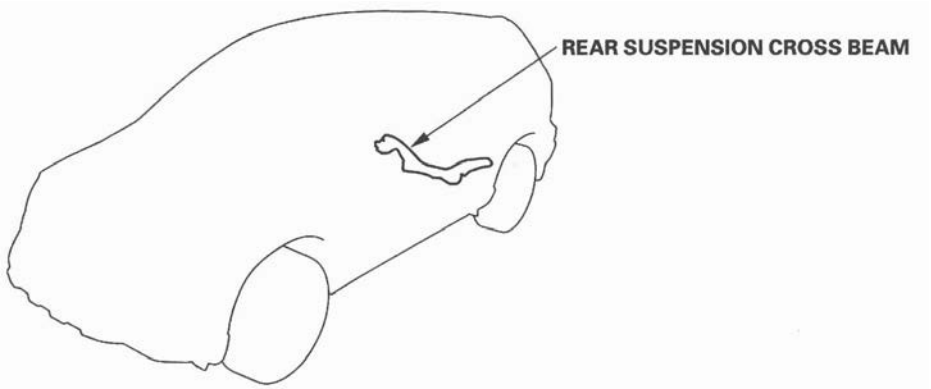

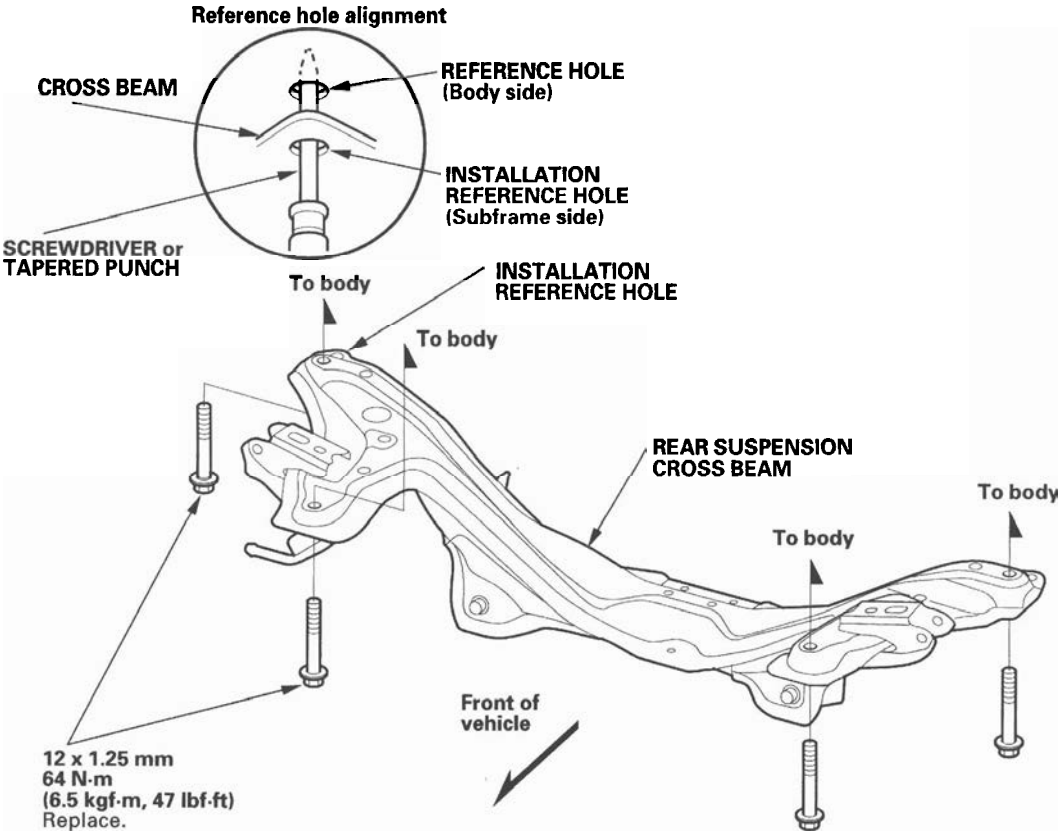

Frame Repair Chart

Top View

Unit: mm (in.)

ø: Inner diameter

a1 For front subframe mount ø16 (0.63) forward
a2 For front subframe mount ø13 (0.51) middle
a3 For front subframe mount ø16 (0.63) rearward
a4 For front subframe mount ø16 (0.63) center side
b1 For engine side mount ø17 (0.67) forward
b2 For engine side mount ø17 (0.67) rearward
b3 For engine side mount ø13 (0.51) wheelhouse side
c1 For transmission mount ø13 (0.51) forward
c2 For transmission mount ø13 (0.51) middle
c3 For transmission mount ø13 (0.51) rearward
c4 For transmission mount ø11 (0.43) wheelhouse side

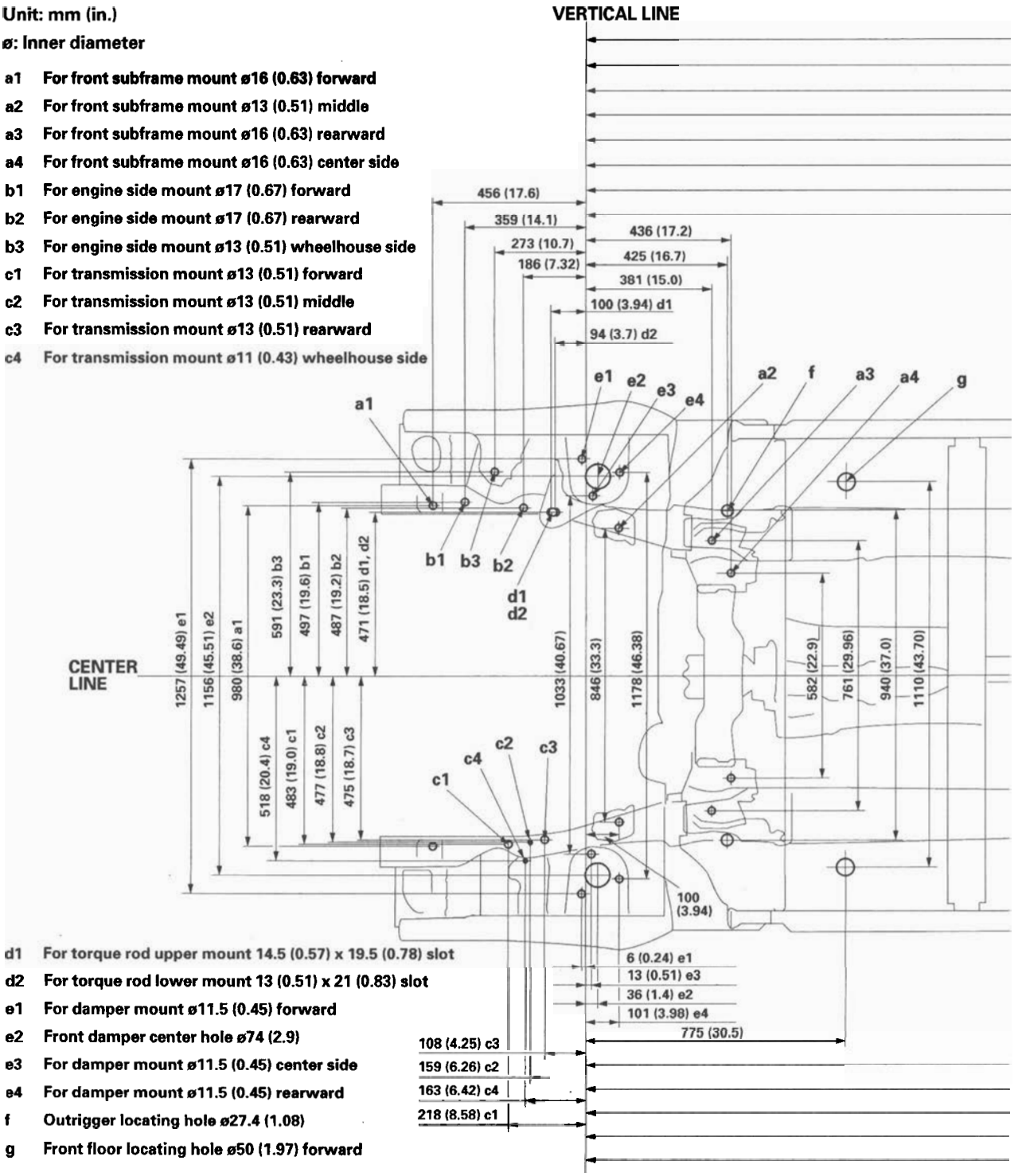

d1 For torque rod upper mount 14.5 (0.57) x 19.5 (0.78) slot
d2 For torque rod lower mount 13 (0.51) x 21 (0.83) slot
e1 For damper mount ø11.5 (0.45) forward
e2 Front damper center hole ø74 (2.9)
e3 For damper mount ø11.5 (0.45) center side
e4 For damper mount ø11.5 (0.45) rearward
f Outrigger locating hole ø27.4 (1.08)
g Front floor locating hole ø50 (1.97) forward

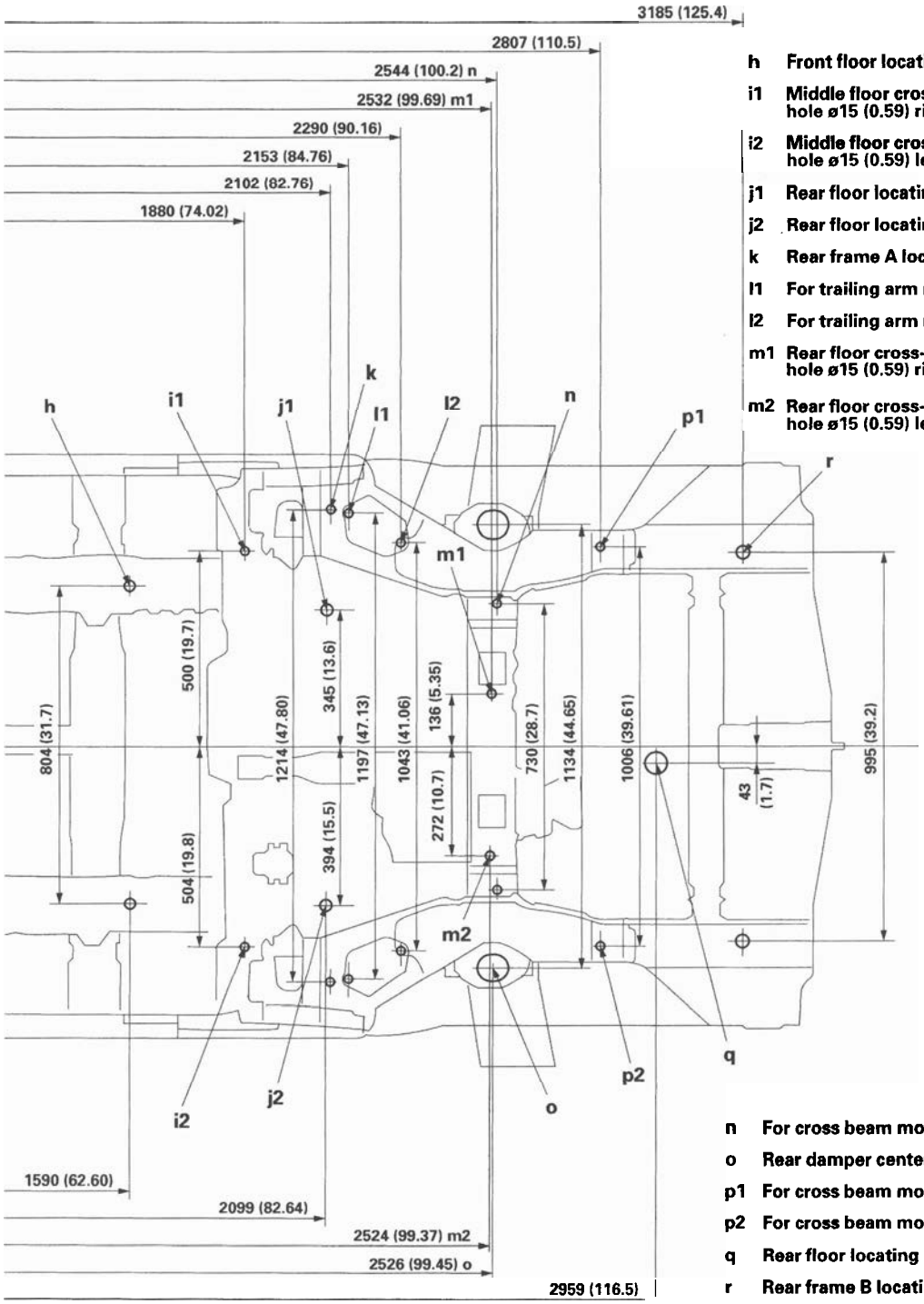

h Front floor locating hole ø25 (0.98) rearward

i1 Middle floor cross-member locating hole ø15 (0.59) right side

i2 Middle floor cross-member locating hole ø15 (0.59) left side

j1 Rear floor locating hole ø25 (0.98) right side

j2 Rear floor locating hole ø25 (0.98) left side

k Rear frame A locating hole ø20 (0.79)

l1 For trailing arm mount ø17 (0.67) forward

l2 For trailing arm mount ø17 (0.67) rearward

m1 Rear floor cross-member locating hole ø15 (0.59) right side

m2 Rear floor cross-member locating hole ø15 (0.59) left side

n For cross beam mount ø15 (0.59)

o Rear damper center 68 (2.7) x 73 (2.9) slot

p1 For cross beam mount ø15 (0.59) right side

p2 For cross beam mount ø15 (0.59) left side

q Rear floor locating hole ø50 (1.97)

r Rear frame B locating hole ø25 (0.98)

(cont'd)

Frame Repair Chart (cont'd)

Side View

Unit: mm (in.)

ø: Inner diameter

a1	For front subframe mount ø16 (0.63) forward
a2	For front subframe mount ø13 (0.51) middle
a3	For front subframe mount ø16 (0.63) rearward
a4	For front subframe mount ø16 (0.63) center side
b1	For engine side mount ø17 (0.67) forward
b2	For engine side mount ø17 (0.67) rearward
b3	For engine side mount ø13 (0.51) wheelhouse side
c1	For transmission mount ø13 (0.51) forward
c2	For transmission mount ø13 (0.51) middle
c3	For transmission mount ø13 (0.51) rearward
c4	For transmission mount ø11 (0.43) wheelhouse side
d1	For torque rod upper mount 14.5 (0.57) x 19.5 (0.78) slot
d2	For torque rod lower mount 13 (0.51) x 21 (0.83) slot
e1	For damper mount ø11.5 (0.45) forward
e2	Front damper center hole ø74 (2.9)
e3	For damper mount ø11.5 (0.45) center side
e4	For damper mount ø11.5 (0.45) rearward
f	Outrigger locating hole ø27.4 (1.08)
g	Front floor locating hole ø50 (1.97) forward

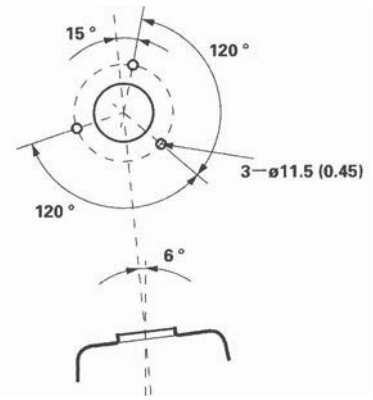

[SECTION: AA]

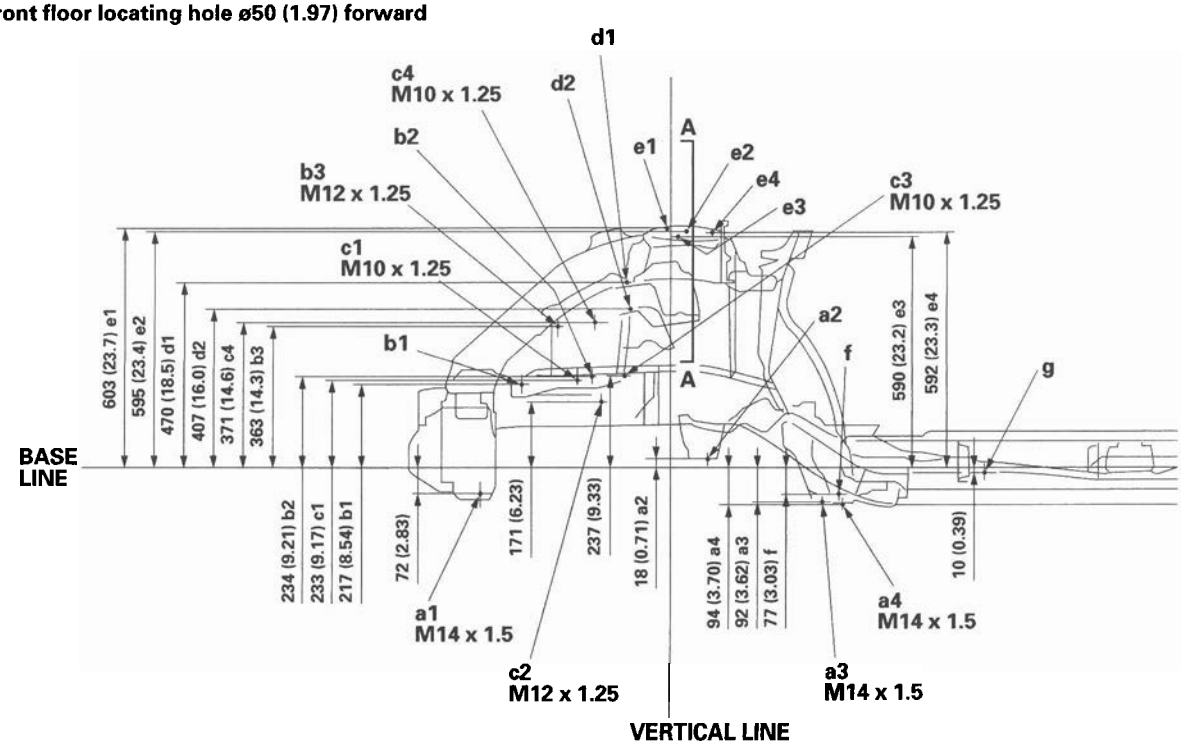

h Front floor locating hole ø25 (0.98) rearward
i1 Middle floor cross-member locating hole ø15 (0.59) right side
i2 Middle floor cross-member locating hole ø15 (0.59) left side
j1 Rear floor locating hole ø25 (0.98) right side
j2 Rear floor locating hole ø25 (0.98) left side
k Rear frame A locating hole ø20 (0.79)
l1 For trailing arm mount ø17 (0.67) forward
l2 For trailing arm mount ø17 (0.67) rearward
m1 Rear floor cross-member locating hole ø15 (0.59) right side
m2 Rear floor cross-member locating hole ø15 (0.59) left side
n For cross beam mount ø15 (0.59)
o Rear damper center 68 (2.7) x 73 (2.9) slot
p1 For cross beam mount ø15 (0.59) right side
p2 For cross beam mount ø15 (0.59) left side
q Rear floor locating hole ø50 (1.97)
r Rear frame B locating hole ø25 (0.98)

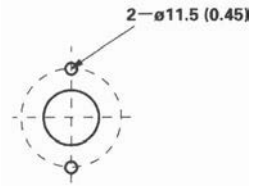

[SECTION: BB]

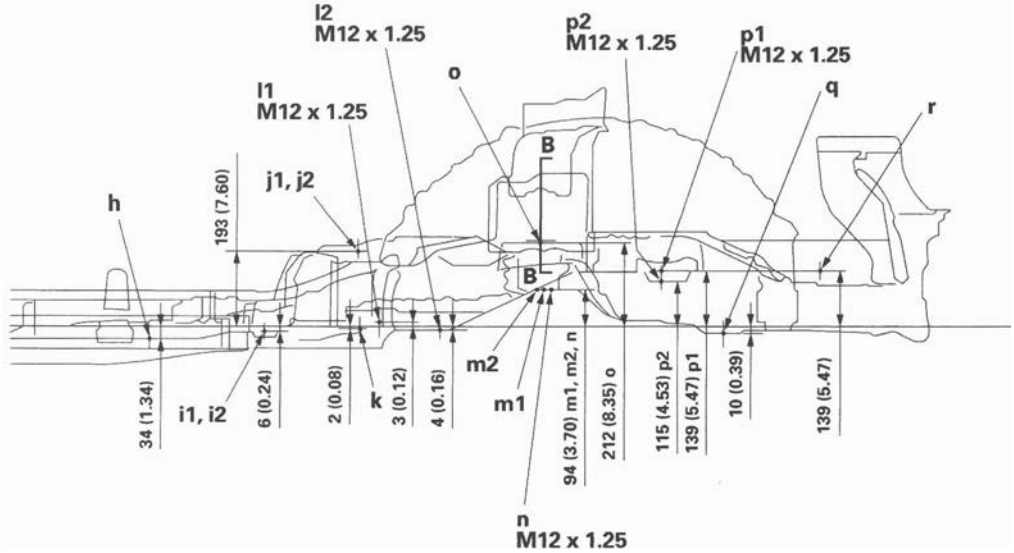

SUPPLEMENTAL RESTRAINT SYSTEM (SRS) (If HVAC maintenance is required)

The CR-V SRS includes a driver's airbag in the steering wheel hub, a passenger's airbag in the dashboard above the glove box, seat belt tensioners in the front seat belt retractors, seat belt buckle tensioners in the front seat belt buckles, side curtain airbags in the sides of the roof, and side airbags in the front seat-backs. Information necessary to safely service the SRS is included in this Service Manual. Items marked with an asterisk (*) on the contents page include or are located near SRS components. Servicing, disassembling, or replacing these items require special precautions and tools, and should be done only by an authorized Honda dealer.

- To avoid rendering the SRS inoperative, which could lead to personal injury or death in the event of a severe frontal or side collision, all SRS service work should be done by an authorized Honda dealer.
- Improper service procedures, including incorrect removal and installation of the SRS, could lead to personal injury caused by unintentional deployment of the airbags and/or side airbags.
- Do not bump or impact the SRS unit, front impact sensors, or side impact sensors when the ignition switch is ON (II), or for at least 3 minutes after the ignition switch is turned OFF; otherwise, the system may fail in a collision, or the airbags may deploy.
- SRS electrical connectors are identified by yellow color coding. Related components are located in the steering column, front console, dashboard, dashboard lower panel, in the dashboard above the glove box, in the front seats, in the roof side, and around the floor. Do not use electrical test equipment on these circuits.

HVAC (Heating, Ventilation, and Air Conditioning)

HVAC (Heating, Ventilation, and Air Conditioning)
Special Tools 21-2

Heating/Air Conditioning
Component Location Index 21-3
A/C Service Tips and Precautions 21-6
A/C Refrigerant Oil Replacement 21-6
A/C Line Replacement 21-7
General Troubleshooting Information 21-8
Symptom Troubleshooting Index 21-10
System Description 21-11
Circuit Diagram 21-18
DTC Troubleshooting 21-20
Recirculation Control Motor Circuit Troubleshooting 21-34
HVAC Control Power and Ground Circuit Troubleshooting 21-36
Radiator and A/C Condenser Fan Low Speed Circuit Troubleshooting 21-37
A/C Condenser Fan High Speed Circuit Troubleshooting 21-41
A/C Compressor Clutch Circuit Troubleshooting 21-43
A/C Signal Circuit Troubleshooting 21-45
Evaporator Temperature Sensor Test 21-48
Power Transistor Test 21-49
Air Mix Control Motor Test 21-50
Air Mix Control Motor Replacement 21-50
Mode Control Motor Test 21-51
Mode Control Motor Replacement 21-51
Recirculation Control Motor Test 21-52
Recirculation Control Motor Replacement 21-52
HVAC Control Unit Removal/Installation 21-53
Dust and Pollen Filter Replacement 21-54
Blower Unit Removal/Installation 21-55
Blower Unit Component Replacement 21-56
Evaporator Core Replacement 21-57
* Heater Unit/Core Replacement 21-59
A/C Compressor Replacement 21-61
A/C Compressor Clutch Check 21-63
A/C Compressor Clutch Overhaul 21-64
A/C Compressor Thermal Protector Replacement 21-65
A/C Compressor Relief Valve Replacement 21-65
A/C Condenser Replacement 21-66
Receiver/Dryer Desiccant Replacement 21-67
Refrigerant Recovery 21-68
System Evacuation 21-69
System Charging 21-70
Refrigerant Leak Test 21-71
A/C System Test 21-72

Special Tools

Ref. No.	Tool Number	Description	Qty
①	07SAZ-001000A	Backprobe Set	2

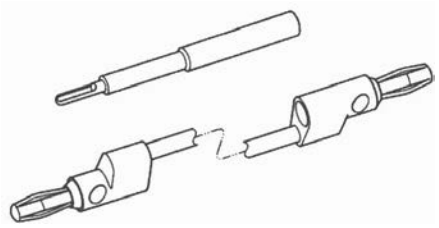

①

Component Location Index

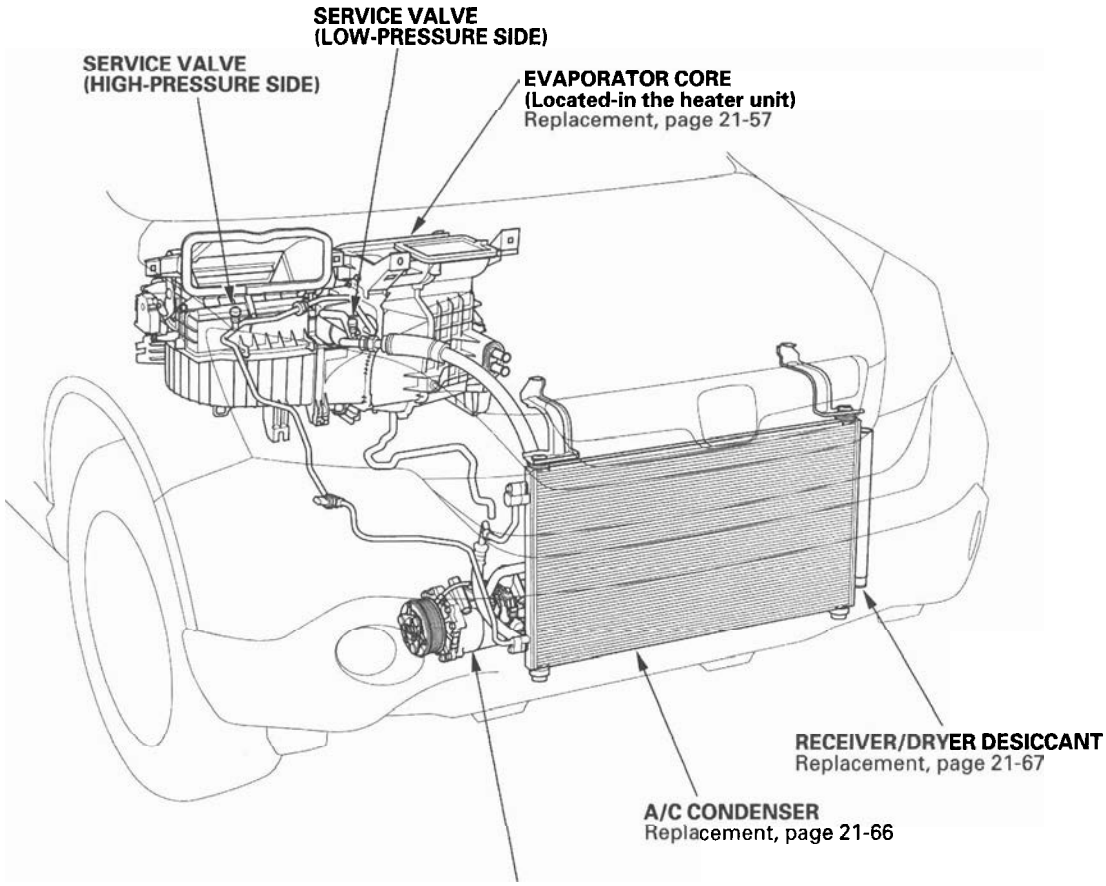

(cont'd)

Component Location Index (cont'd)

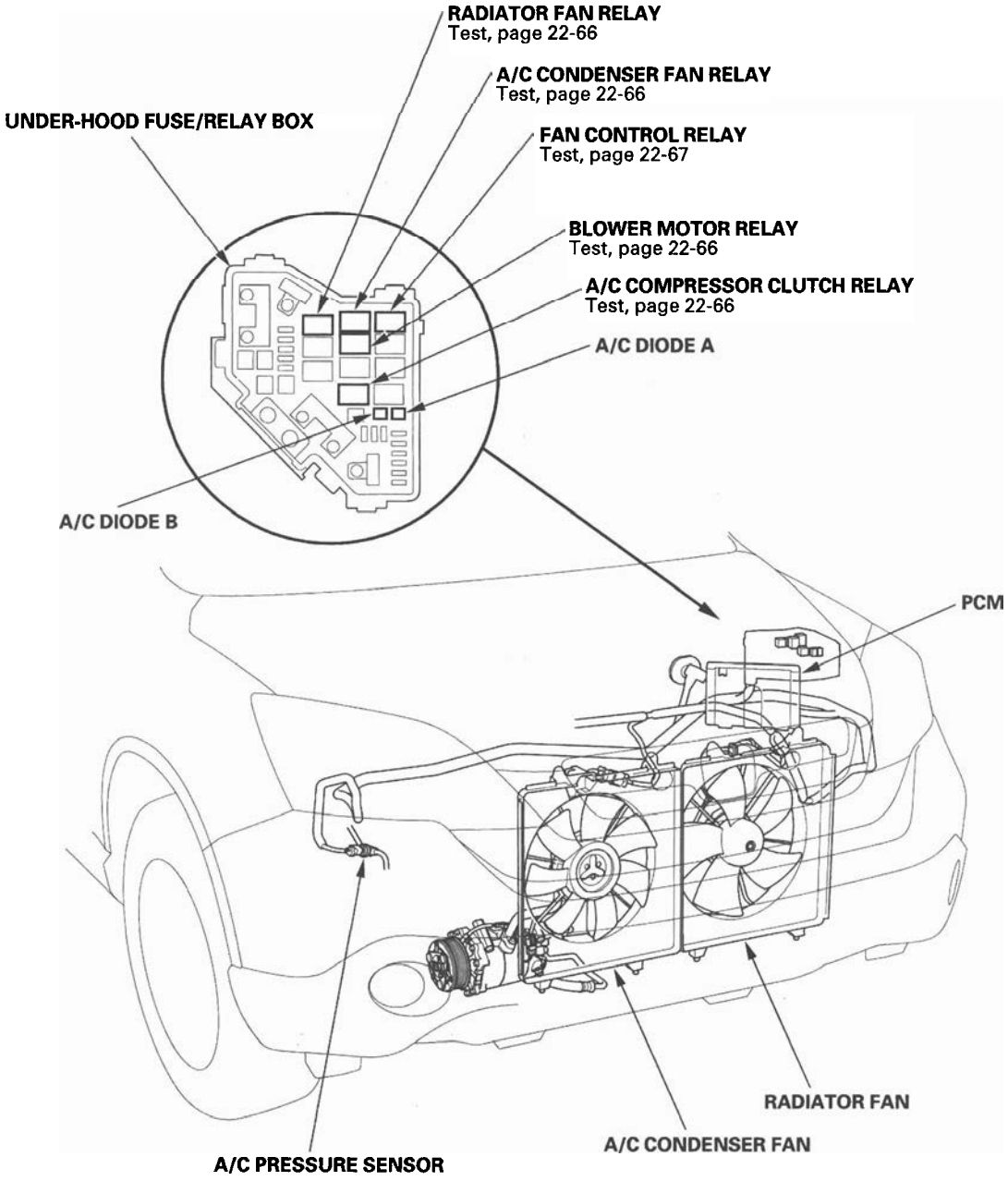

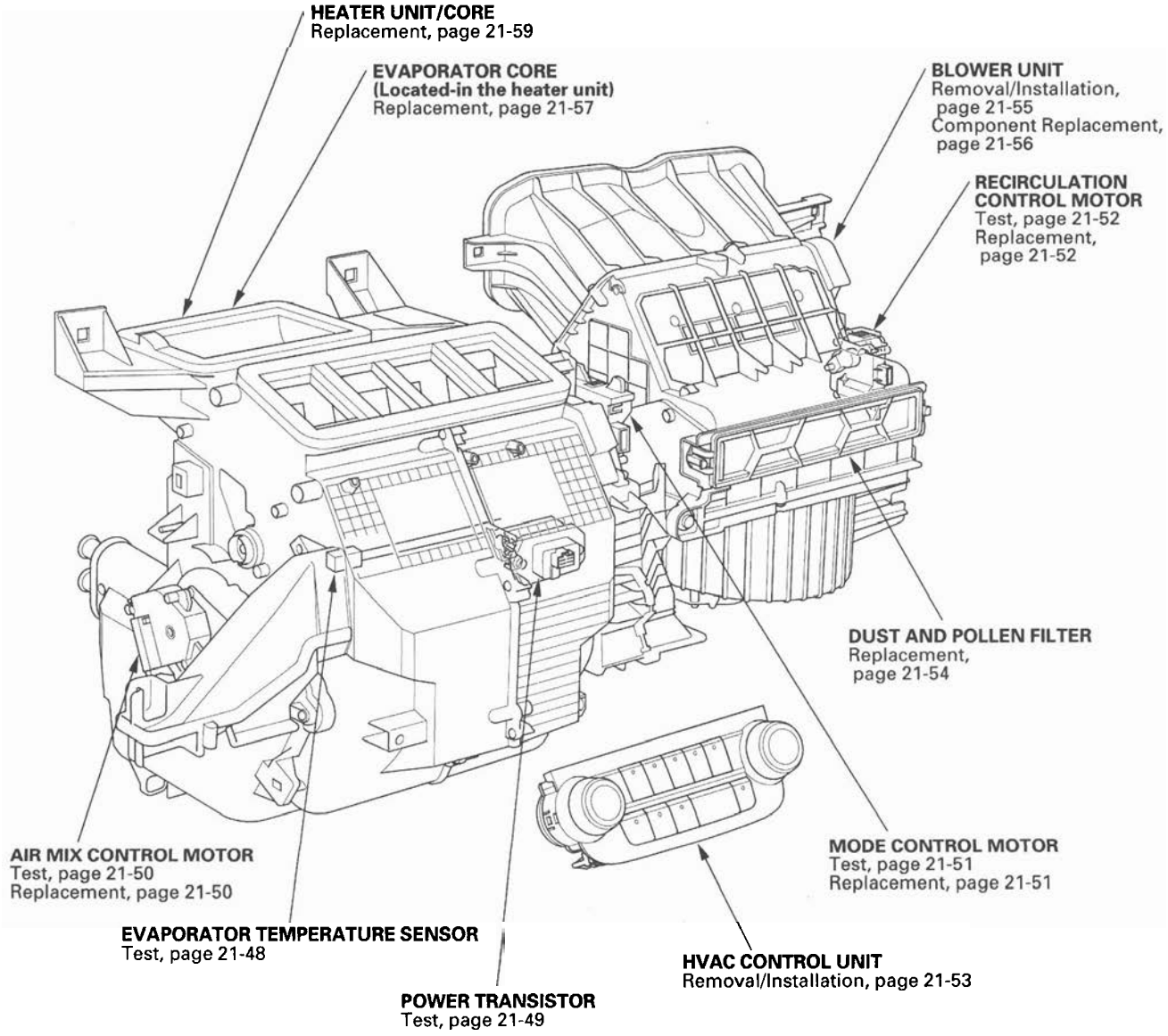
HEATER UNIT/CORE
Replacement, page 21-59
EVAPORATOR CORE
(Located-in the heater unit)
Replacement, page 21-57
BLOWER UNIT
Removal/Installation, page 21-55
Component Replacement, page 21-56
RECIRCULATION CONTROL MOTOR
Test, page 21-52
Replacement, page 21-52
DUST AND POLLEN FILTER
Replacement, page 21-54
MODE CONTROL MOTOR
Test, page 21-51
Replacement, page 21-51
AIR MIX CONTROL MOTOR
Test, page 21-50
Replacement, page 21-50
EVAPORATOR TEMPERATURE SENSOR
Test, page 21-48
POWER TRANSISTOR
Test, page 21-49
HVAC CONTROL UNIT
Removal/Installation, page 21-53

A/C Service Tips and Precautions

⚠WARNING

- Compressed air mixed with the R-134a forms a combustible vapor.
- The vapor can burn or explode causing serious injury.
- Never use compressed air to pressure test R-134a service equipment or vehicle air conditioning systems.

⚠CAUTION

- Air conditioning refrigerant or lubricant vapor can irritate your eyes, nose, or throat.
- Be careful when connecting service equipment.
- Do not breathe refrigerant or vapor.

The air conditioning system uses HFC-134a (R-134a) refrigerant and polyalkyleneglycol (PAG) refrigerant oil, which are not compatible with CFC-12 (R-12) refrigerant and mineral oil. Do not use R-12 refrigerant or mineral oil in this system, and do not attempt to use R-12 servicing equipment; damage to the air conditioning system or your servicing equipment will result.
Use only service equipment that is U.L.-listed and is certified to meet the requirements of SAE J2210 to remove R-134a from the air conditioniig system.

If accidental system discharge occurs, ventilate work area before resuming service.

R-134a service equipment or vehicle air conditioning systems should not be pressure tested or leak tested with compressed air.

Additional health and safety information may be obtained from the refrigerant and lubricant manufacturers.

- Always disconnect the negative cable from the battery whenever replacing air conditioning parts.
- Keep moisture and dirt out of the system. When disconnecting any lines, plug or cap the fittings immediately; don't remove the caps or plugs until just before you reconnect each line.
- Before connecting any hose or line, apply a few drops of refrigerant oil to the O-ring.
- When tightening or loosening a fitting, use a second wrench to support the matching fitting.
- When discharging the system, use an R-134a refrigerant recovery/recycling/charging station; don't release refrigerant into the atmosphere.

A/C Refrigerant Oil Replacement

Recommended PAG oil: SP-10

- P/N 38897-P13-A01AH: 120 mL (4 fl·oz)
- P/N 38899-P13-A01: 40 mL (1 1/3 fl·oz)

Add the recommended refrigerant oil in the amount listed if you replace any of the following parts.

- To avoid contamination, do not return the oil to the container once dispensed, and never mix it with other refrigerant oils.
- Immediately after using the oil, reinstall the cap on the container, and seal it to avoid moisture absorption.
- Do not spill the refrigerant oil on the vehicle; it may damage the paint; if it gets on the paint, wash it off immediately.

A/C condenser
(including Dryer
Desiccant) .....50 mL (1 2/3 fl·oz)
Evaporator .....50 mL (1 2/3 fl·oz)
Line or hose .....10 mL (1/3 fl·oz)
Receiver/Dryer
Desiccant .....10 mL (1/3 fl·oz)
Leakage repair .....25 mL (5/6 fl·oz)
A/C compressor .....Since the oil separator is equipped inside the compressor for this vehicle, oil drainage is unnecessary at the time of compressor replacement.

A/C Line Replacement

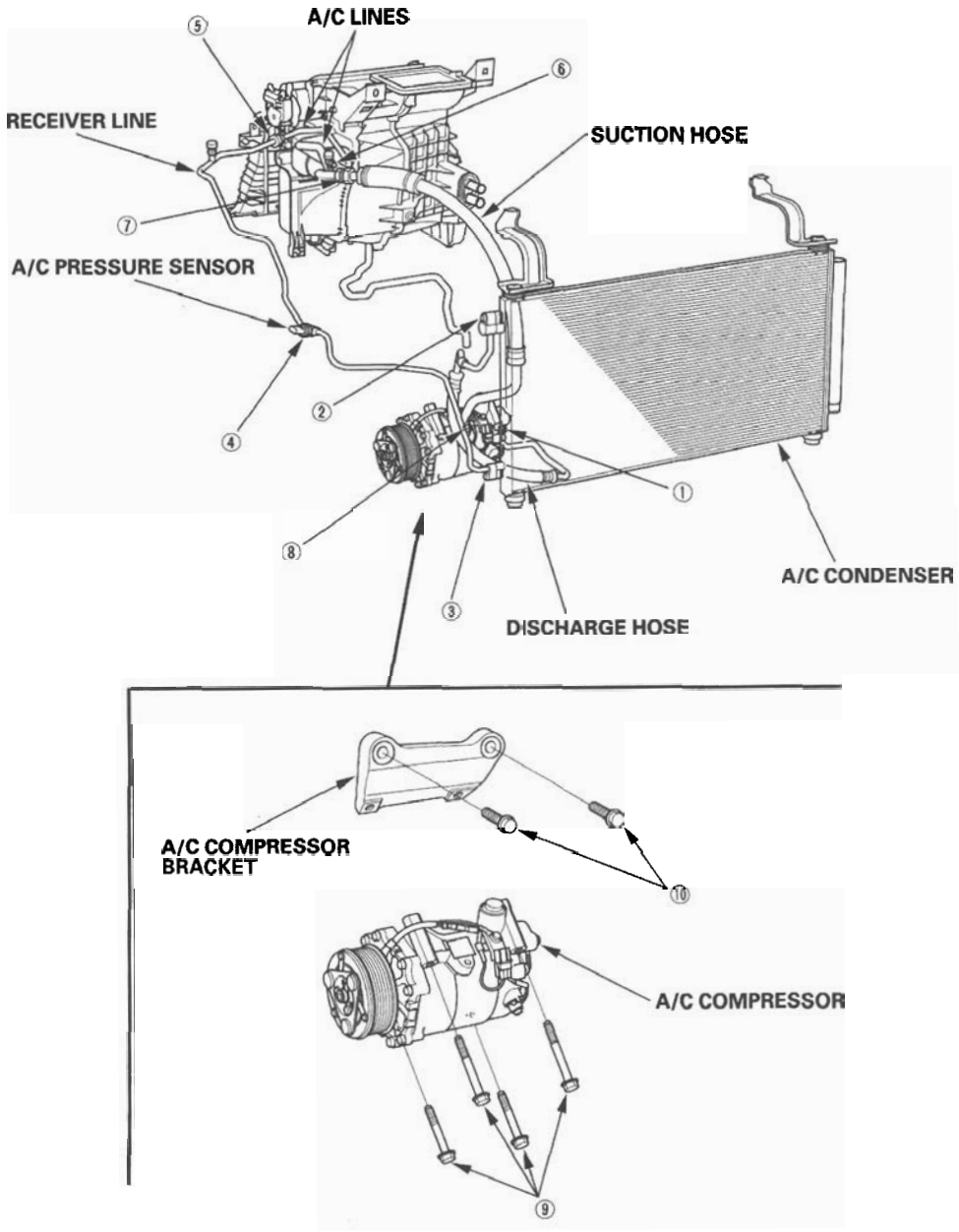

① Discharge hose to the A/C compressor (6 x 1.0 mm): 9.8 N·m (1.0 kgf·m, 7.2 lbf·ft)
② Discharge hose to the A/C condenser (6 x 1.0 mm): 9.8 N·m (1.0 kgf·m, 7.2 lbf·ft)
③ Receiver line to the A/C condenser (6 x 1.0 mm): 9.8 N·m (1.0 kgf·m, 7.2 lbf·ft)
④ A/C pressure sensor to receiver line (11 x 1.0 mm): 10.8 N·m (1.1 kgf·m, 8.0 lbf·ft)
⑤ Receiver line to the A/C line (16 x 1.5 mm): 13.3 N·m (1.4 kgf·m, 9.8 lbf·ft)
⑥ A/C lines to the evaporator (6 x 1.0 mm): 9.8 N·m (1.0 kgf·m, 7.2 lbf·ft)
⑦ A/C line to the suction hose (24 x 1.5 mm): 31.9 N·m (3.2 kgf·m, 23.5 lbf·ft)
⑧ Suction hose to the A/C compressor (6 x 1.0 mm): 9.8 N·m (1.0 kgf·m, 7.2 lbf·ft)
⑨ A/C compressor to the A/C compressor bracket (8 x 1.25 mm): 22 N·m (2.2 kgf·m, 16 lbf·ft)
⑩ A/C compressor bracket to the engine block (10 x 1.25 mm): 45 N·m (4.6 kgf·m, 33.2 lbf·ft)

General Troubleshooting Information

How to Use the Self-diagnostic Function

The HVAC control unit has a self-diagnostic function for heating, ventilation, and air conditioning system. To run the self-diagnostic function, do the following:

1. Turn the ignition switch OFF and then ON (II).
2. Set the FAN CONTROL dial OFF, the TEMPERATURE CONTROL dial on Max Cool, and select the VENT mode.
3. Turn the ignition switch OFF and then ON (II).
4. Press and hold the RECIRCULATION CONTROL button, then press the REAR WINDOW DEFOGGER button five times within 10 seconds. Release the RECIRCULATION CONTROL and REAR WINDOW DEFOGGER buttons; the recirculation indicator blinks two times, then the self-diagnostic begins.

   NOTE:
   - The blower motor will run at various speeds when in the self-diagnostic mode.
   - In the case of multiple problems, the recirculation indicator will blink the lowest number DTC only.
   - If no DTCs are found, the indicator will not blink.

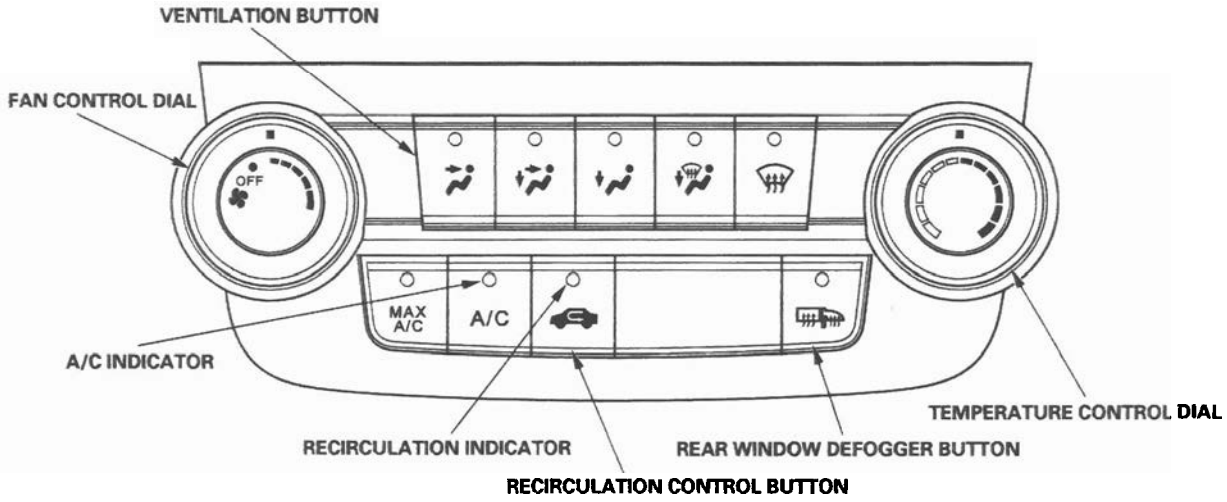

Example of DTC Indication Pattern (DTC 3)

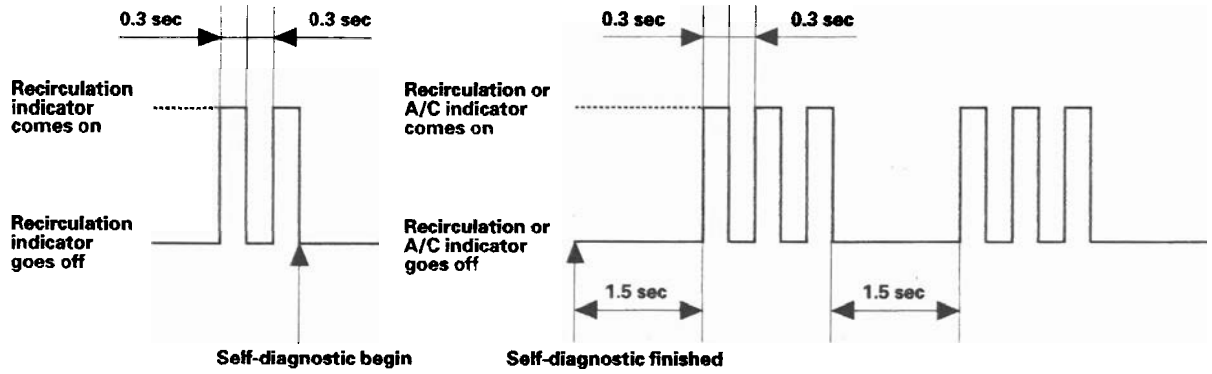

DTC (Recirculation Indicator Blinks)	Detection Item
1	An open in the air mix control motor circuit (see page 21-20)
2	A short in the air mix control motor circuit (see page 21-21)
3	A problem in the air mix control linkage, door, or motor circuit (see page 21-22)
4	An open or short in the mode control motor circuit (see page 21-24)
5	A problem in the mode control linkage, doors, or motor circuit (see page 21-26)
6	A problem in the blower motor circuit (see page 21-27)
7	HVAC control unit internal error (see page 21-31)

DTC (A/C Indicator Blinks)	Detection Item
8	An open in the evapolator temperature sensor circuit (see page 21-31)
9	A short in the evapolator temperature sensor circuit (see page 21-33)

Clear the DTCs

When the problem is repaired, DTCs will automatically clear.

Max Cool Position Function

When the mode control button is in the MAX A/C position, the HVAC control unit will automatically select the recirculation mode and turn the A/C on. If the recirculation switch is pressed when in MAX A/C, MAX A/C turns off. If A/C is pressed when in MAX A/C, the A/C turns off.

Symptom Troubleshooting Index

Symptom	Diagnostic procedure	Also check for
Recirculation control doors do not change between Fresh and Recirculate	Recirculation control motor circuit troubleshooting (see page 21-34)	• HVAC DTCs (see page 21-8) • Blown fuse No. 36 (10 A) in the under-dash fuse/relay box • Cleanliness and tightness of all terminals
Blower, heater controls, and A/C do not work	HVAC control power and ground circuit troubleshooting (see page 21-36)	• HVAC DTCs (see page 21-8) • Blown fuse No. 36 (10 A) in the under-dash fuse/relay box • Poor ground at G503 (see page 22-62) • Cleanliness and tightness of all terminals
Both fans do not run at low speed with the A/C on (but the A/C compressor runs with the A/C on)	Radiator and A/C condenser fan low speed circuit troubleshooting (see page 21-37)	• HVAC DTCs (see page 21-8) • Blown fuse No. 7 (20 A) in the under-hood fuse/relay box, and No. 36 (10 A) in the under-dash fuse/relay box • Poor ground at G301 (see page 22-62) • Cleanliness and tightness of all terminals
The A/C condenser fan does not run at high speed (but both fans run at low speed and the A/C compressor operates with the A/C on)	A/C condenser fan high speed circuit troubleshooting (see page 21-41)	• HVAC DTCs (see page 21-8) • Blown fuse No. 6 (20 A) and No. 15 (7.5 A) in the under-hood fuse/relay box • Cleanliness and tightness of all terminals
Both fans do not run at high speed with the A/C on (but both fans run at low speed and the A/C compressor operates with the A/C on)	A/C pressure sensor troubleshooting: A/C pressure sensor circuit low voltage (see page 11-292), A/C pressure sensor circuit high voltage (see page 11-294) ECT troubleshooting: ECT sensor 2 circuit low voltage (see page 11-165), ECT sensor 2 circuit high voltage (see page 11-167)	• Powertrain DTCs (see page 11-3) • Cleanliness and tightness of all terminals
The A/C compressor clutch does not engage (but both fans run with the A/C on)	A/C compressor clutch circuit troubleshooting (see page 21-43)	• HVAC DTCs (see page 21-8) Blown fuse No. 20 (7.5 A) in the under-hood fuse/relay box, and No. 36 (10 A) in the under-dash fuse/relay box • Cleanliness and tightness of all terminals
A/C system does not come on (both fans and the A/C compressor do not work); heater is OK	A/C signal circuit troubleshooting (see page 21-45) A/C pressure sensor troubleshooting: A/C pressure sensor circuit low voltage (see page 11-292), A/C pressure sensor circuit high voltage (see page 11-294)	• HVAC DTCs (see page 21-8) • Powertrain DTCs (see page 11-3) • Cleanliness and tightness of all terminals

System Description

The air conditioning system removes heat from the passenger compartment by transferring heat from the ambient air to the evaporator. The evaporator cools the air with the refrigerant that is circulating through the evaporator. The refrigerant expands in the evaporator, and the evaporator becomes very cold and absorbs the heat from the ambient air. The blower fan pushes air across the evaporator where the heat is absorbed, and then it blows the cool air into the passenger compartment.

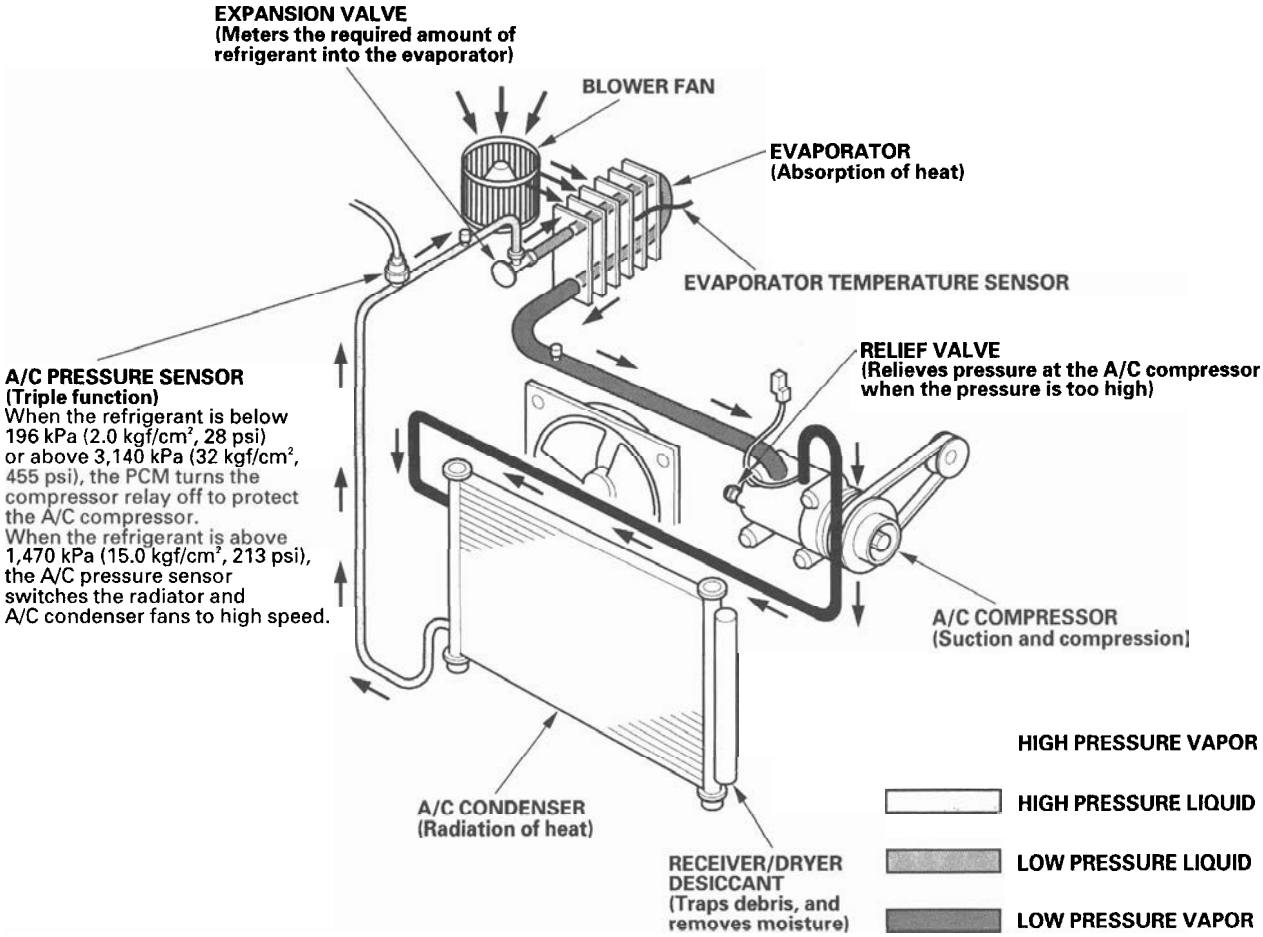

This vehicle uses HFC-134a (R-134a) refrigerant, which does not contain chlorofluorocarbons. Pay attention to the following service items:

- Do not mix refrigerants CFC-12 (R-12) and HFC-134a (R-134a). They are not compatible.
- Use only the recommended polyalkyleneglycol (PAG) refrigerant oil (SP-10) designed for the R-134a A/C compressor. Intermixing the recommended (PAG) refrigerant oil with any other refrigerant oil will result in A/C compressor failure.
- All A/C system parts (A/C compressor, discharge line, suction line, evaporator, A/C condenser, receiver/dryer, expansion valve, O-rings for joints) are designed for refrigerant R-134a. Do not exchange with R-12 parts.
- Use a halogen gas leak detector designed for refrigerant R-134a.
- R-12 and R-134a refrigerant servicing equipment are not interchangeable. Use only a recovery/recycling/charging station that is U.L.-listed and is certified to meet the requirements of SAE J2210 to service the R-134a air conditioning systems.
- Always recover refrigerant R-134a with an approved recovery/recycling/charging station before disconnecting any A/C fitting.

(cont'd)

System Description (cont'd)

Oil Separator

Oil emission from the A/C compressor to the A/C line is reduced by placing the oil separator in the A/C compressor. This results in a thinner oil film inside of the heat exchangers (A/C condenser and evaporator). Air conditioning efficiency is increased without sacrificing engine performance.

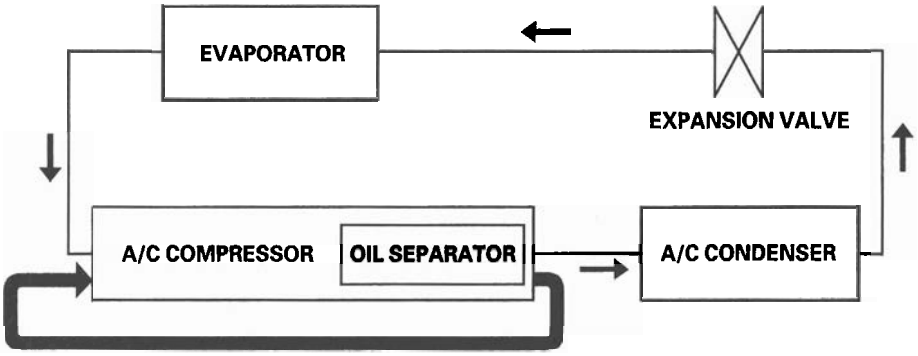

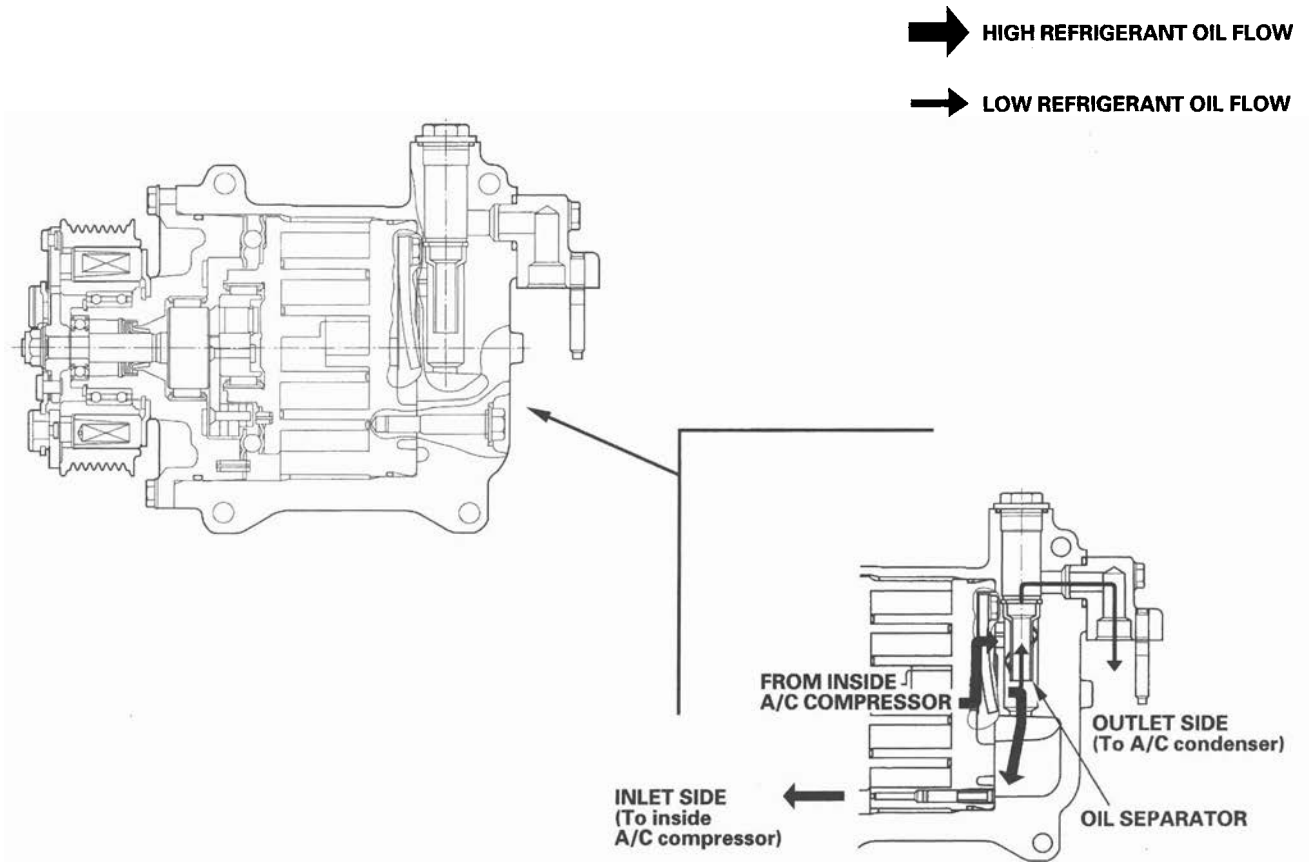

A/C Pressure Sensor

The A/C pressure sensor converts A/C pressure into electrical signals to the PCM.

NOTE: The pressures can be monitored using the HDS PGM-FI Data List.

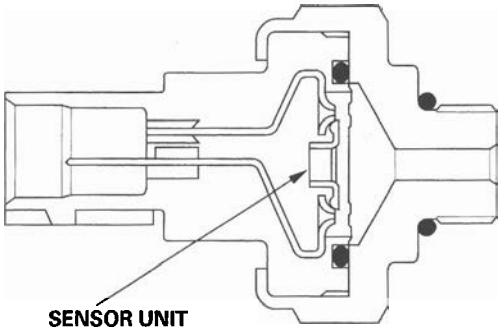

The response of the A/C pressure sensor is shown in the graph.

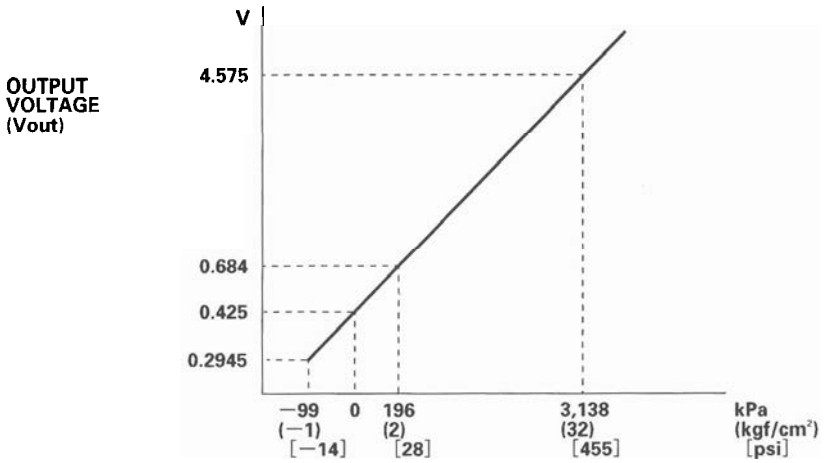

A/C PRESSURE

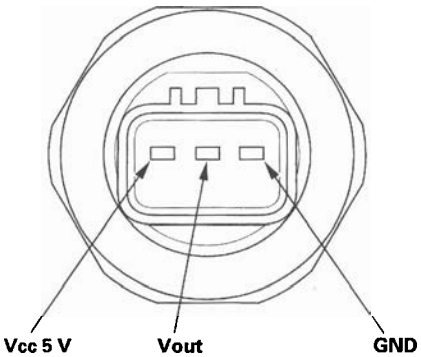

(cont'd)

System Description (cont'd)

Heating/Air Conditioning Door Positions

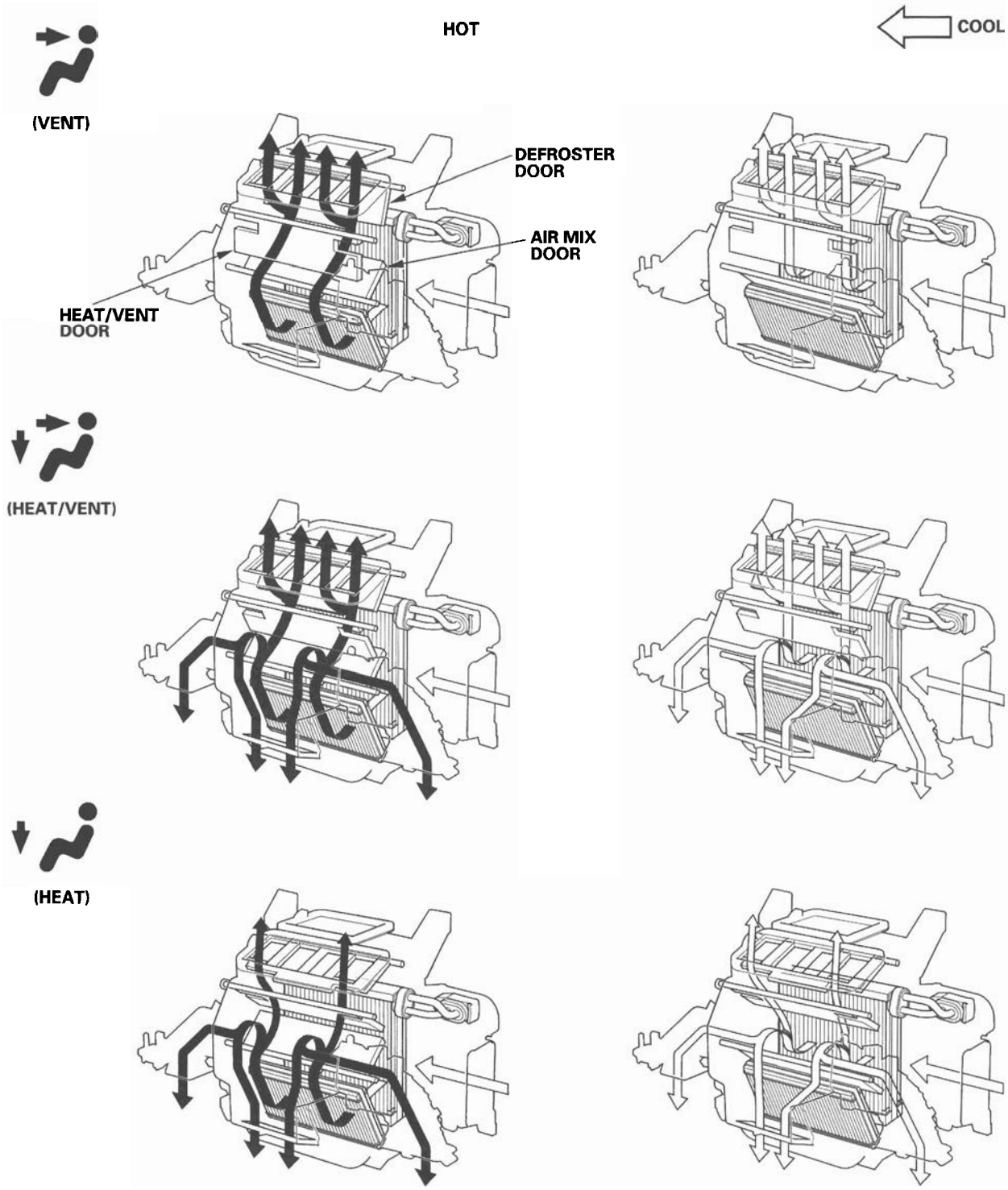



(HEAT/DEF)

HOT

COOL

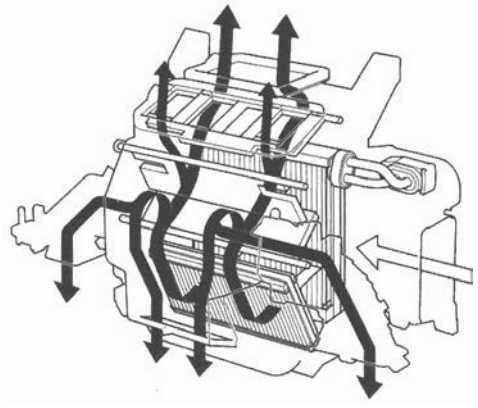

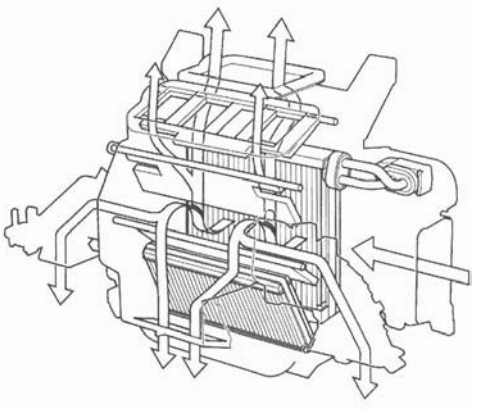



(DEF)

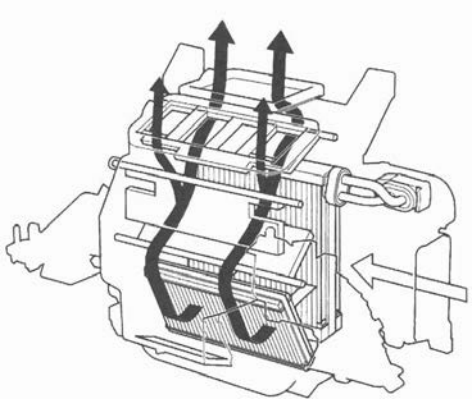

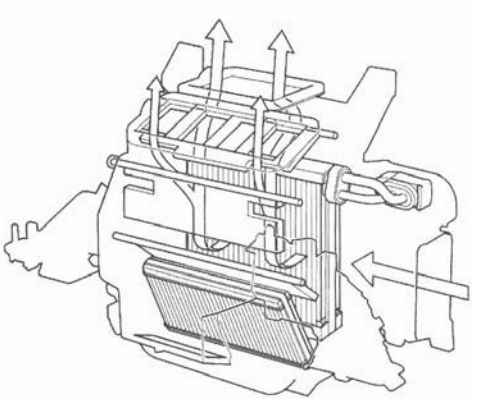

(cont'd)

System Description (cont'd)

HVAC Control Unit Inputs and Outputs

HVAC CONTROL UNIT 28P CONNECTOR

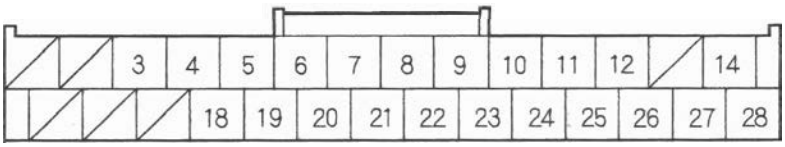

Wire side of female terminals

CONNECTOR A

Cavity	Wire color	Signal	
1	———	———	———
2	———	———	———
3	ORN	MODE 1	OUTPUT
4	LT GRN	MODE 2	OUTPUT
5	PUR	MODE 3	OUTPUT
6	LT BLU	AIR MIX POTENTIAL 5 V	OUTPUT
7	BLU	MODE 4	OUTPUT
8	GRY	AIR MIX POTENTIAL	OUTPUT
9	BRN	EVAPORATOR TEMPERATURE SENSOR	OUTPUT
10	WHT	A/C SIGNAL	INPUT
11	BLU	BLOWER FEEDBACK	INPUT
12	RED	POWER TRANSISTOR CONTROL	OUTPUT
13	———	———	———
14	GRN	ILLUMI (−)	OUTPUT
15	———	———	———
16	———	———	———
17	———	———	———
18	BLK	GROUND (G503)	OUTPUT
19	LT GRN	SENSOR COMMON GROUND	INPUT
20	LT GRN	REAR WINDOW DEFOGGER RELAY	INPUT
21	GRN	RECIRCULATE	OUTPUT
22	WHT	FRESH	INPUT
23	PNK	AIR MIX HOT	INPUT
24	LT BLU	AIR MIX COOL	OUTPUT
25	LT GRN	MODE VENT	OUTPUT
26	GRN	MODE DEF	OUTPUT
27	BRN	IG2 (Power)	INPUT
28	GRY	ILLUMI (+)	INPUT

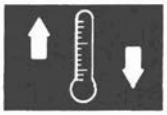

Circuit Diagram

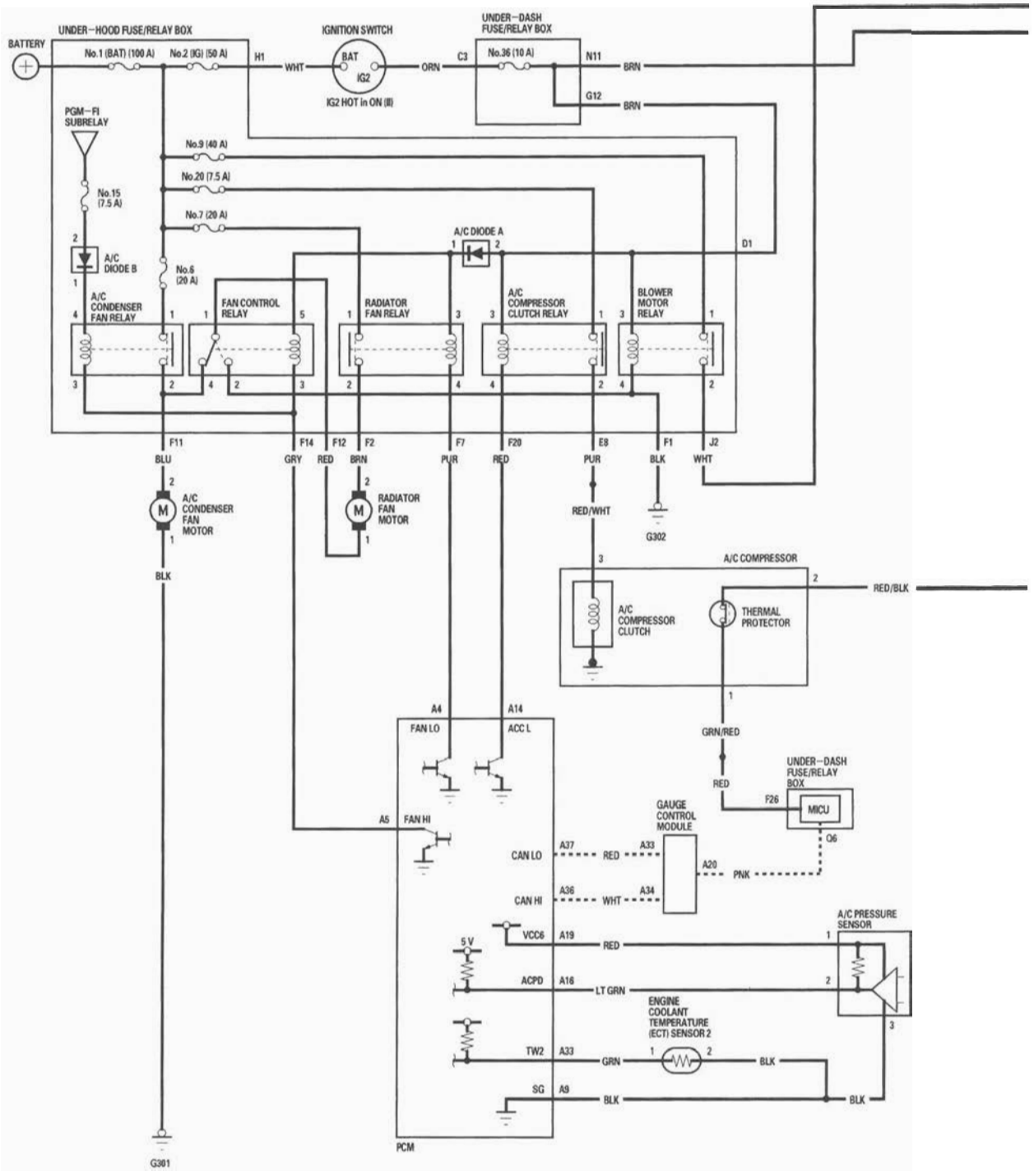

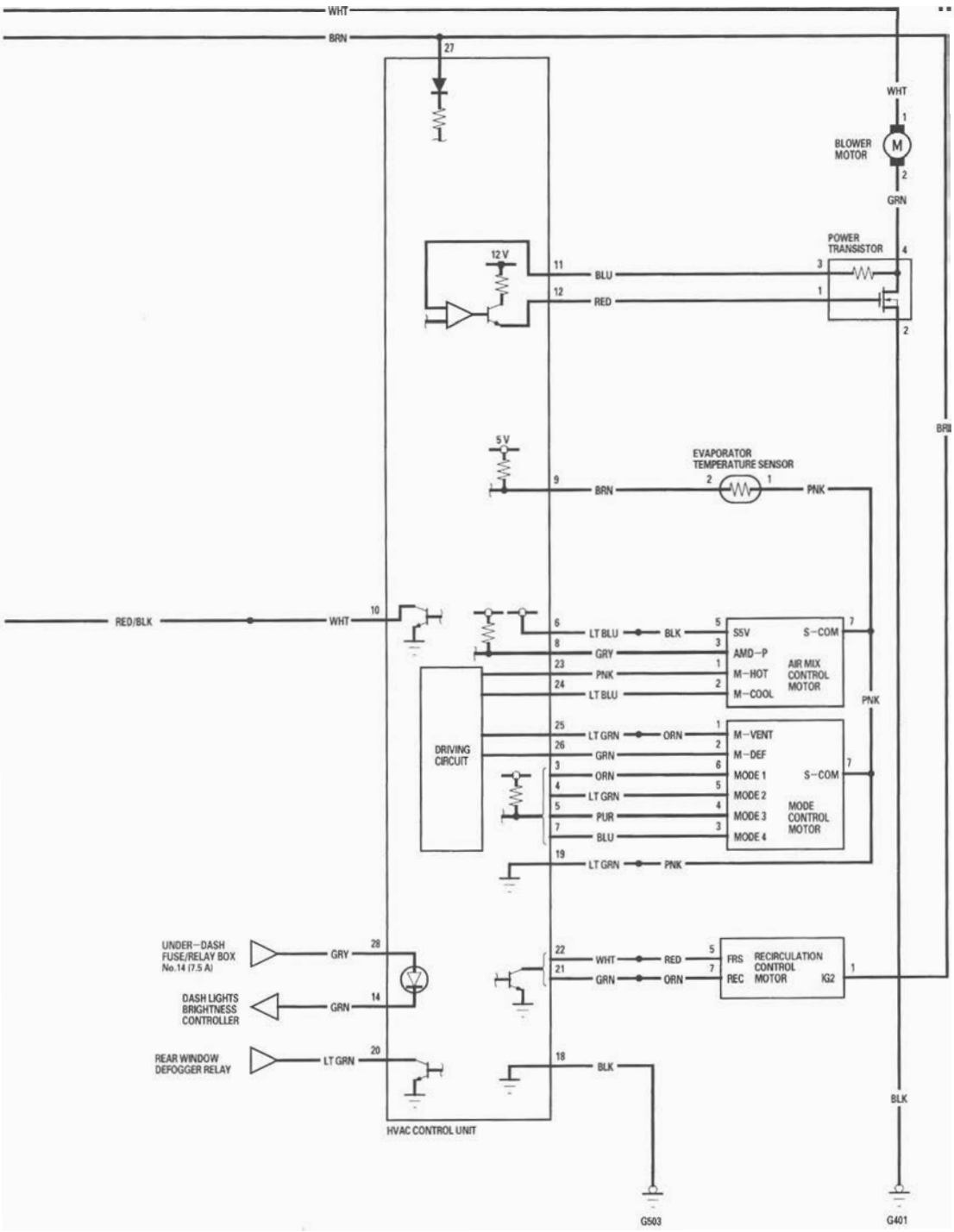
WHT
BRN
27
WHT
1
BLOWER MOTOR
M
2
GRN
POWER TRANSISTOR
4
12 V
11
BLU
3
12
RED
1
2
5 V
EVAPORATOR TEMPERATURE SENSOR
9
BRN
2
1
PNK
RED/BLK
WHT
10
6
LT BLU
BLK
5
S5V
S-COM
7
8
GRY
3
AMD-P
23
PNK
1
M-HOT
AIR MIX CONTROL MOTOR
24
LT BLU
2
M-COOL
PNK
DRIVING CIRCUIT
25
LT GRN
ORN
1
M-VENT
26
GRN
2
M-DEF
3
ORN
6
MODE 1
S-COM
7
4
LT GRN
5
MODE 2
5
PUR
4
MODE 3
MODE CONTROL MOTOR
7
BLU
3
MODE 4
19
LT GRN
PNK
UNDER-DASH FUSE/RELAY BOX No.14 (7.5 A)
GRY
28
DASH LIGHTS BRIGHTNESS CONTROLLER
GRN
14
REAR WINDOW DEFOGGER RELAY
LT GRN
20
22
WHT
RED
5
FRS
RECIRCULATION CONTROL
21
GRN
ORN
7
REC
MOTOR
IG2
1
18
BLK
BLK
HVAC CONTROL UNIT
G503
G401

DTC Troubleshooting

DTC indicator 1: An Open in the Air Mix Control Motor Circuit

1. Start the engine.
2. Turn on the A/C, then set the temperature control dial to Max Hot.
3. Turn the ignition switch OFF and then ON (II).
4. Do the self-diagnostic with the HVAC control unit (see page 21-8).
5. Check for DTCs.

   Is DTC 1 indicated?

   YES—Go to step 6.

   NO—Intermittent failure, check for loose wires or poor connections on the air mix control motor circuit. ■
6. Turn the ignition switch OFF.
7. Test the air mix control motor (see page 21-50).

   Is the air mix control motor OK?

   YES—Go to step 8.

   NO—Replace the air mix control motor (see page 21-50). ■
8. Disconnect the air mix control motor 7P connector.
9. Disconnect the HVAC control unit 28P connector.
10. Check for continuity between the following terminals of the HVAC control unit 28P connector and the air mix control motor 7P connector.

28P:	7P:
No. 6	No. 5
No. 8	No. 3
No. 19	No. 7

HVAC CONTROL UNIT 28P CONNECTOR
Wire side of female terminals

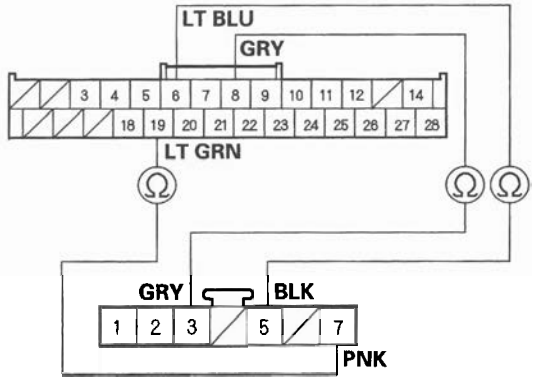

AIR MIX CONTROL MOTOR 7P CONNECTOR
Wire side of female terminals

Is there continuity?

YES—Check for loose wires or poor connections at the HVAC control unit 28P connector and at the air mix control motor 7P connector. If the connections are good, substitute a known-good HVAC control unit and recheck. If the symptom/indication goes away, replace the original HVAC control unit. ■

NO—Repair open in the wire(s) between the HVAC control unit and the air mix control motor. ■

DTC indicator 2: A Short in the Air Mix Control Motor Circuit

1. Turn the ignition switch OFF and then ON (II).
2. Do the self-diagnostic with the HVAC control unit (see page 21-8).
3. Check for DTCs.

   Is DTC 2 indicated?

   YES—Go to step 4.

   NO—Intermittent failure.■
4. Turn the ignition switch OFF.
5. Disconnect the air mix control motor 7P connector.
6. Disconnect the HVAC control unit 28P connector.
7. Check for continuity between body ground and the HVAC control unit 28P connector terminals No. 6 and No. 8 individually.

HVAC CONTROL UNIT 28P CONNECTOR

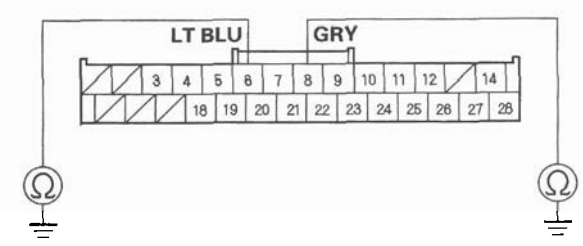

Wire side of female terminals

Is there continuity?

YES—Repair short to body ground in the wire(s) between the HVAC control unit and the air mix control motor.■

NO—Go to step 8.

8. Check for continuity between the HVAC control unit 28P connector terminals No. 6 and No.8.

HVAC CONTROL UNIT 28P CONNECTOR

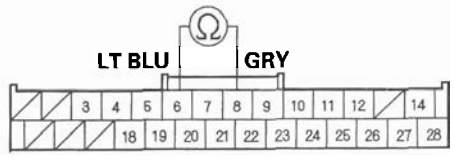

Wire side of female terminals

Is there continuity?

YES—Repair the short in the wires.■

NO—Go to step 9.

(cont'd)

DTC Troubleshooting (cont'd)

9. Turn the ignition switch ON (II), and check the same terminals for voltage to body ground.

HVAC CONTROL UNIT 28P CONNECTOR

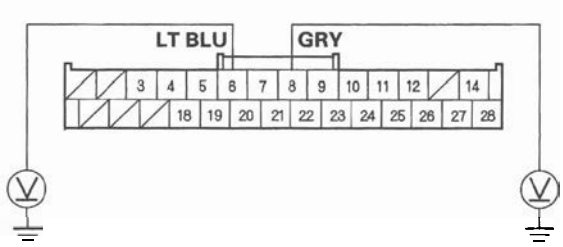

Wire side of female terminals

Is there battery voltage?

YES—Repair short to power in the wire(s) between the HVAC control unit and the air mix control motor. This short may also damage the HVAC control unit. Repair the short to power before replacing the HVAC control unit.■

NO—Go to step 10.

10. Test the air mix control motor (see page 21-50).

Is the air mix control motor OK?

YES—Check the air mix control motor operation with the original HVAC control unit. If the motor operation is no good, substitute a known-good HVAC control unit and recheck.
If the symptom/indication goes away and the air mix control motor runs, replace the original HVAC control unit.■

NO—Replace the air mix control motor (see page 21-50).■

DTC indicator 3: A Problem in the Air Mix Control Linkage, Door, or Motor Circuit

1. Turn the ignition switch OFF and then ON (II).
2. Do the self-diagnostic with the HVAC control unit (see page 21-8).
3. Check for DTCs.

Is DTC 3 indicated?

YES—Go to step 5.

NO—Intermittent failure, check for loose wires or poor connections on the air mix control motor circuit.■

4. Turn the ignition switch OFF.
5. Test the air mix control motor (see page 21-50).

Is the air mix control motor OK?

YES—Go to step 6.

NO—Replace the air mix control motor (see page 21-50), or repair the air mix control linkage or door.■

6. Disconnect the air mix control motor 7P connector.
7. Disconnect the HVAC control unit 28P connector.

8. Check for continuity between the following terminals of the HVAC control unit 28P connector and the air mix control motor 7P connector.
   28P: 7P:
   No. 23 No. 1
   No. 24 No. 2

HVAC CONTROL UNIT 28P CONNECTOR
Wire side of female terminals

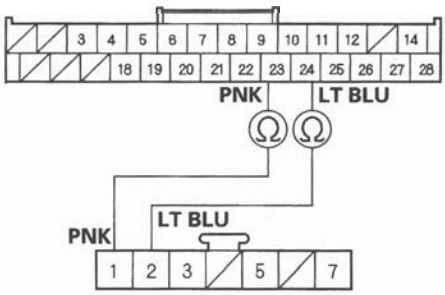

AIR MIX CONTROL MOTOR 7P CONNECTOR
Wire side of female terminals

Is there continuity?

YES—Go to step 9.

NO—Repair open in the wire(s) between the HVAC control unit and the air mix control motor.■

9. Check for continuity between body ground and the HVAC control unit 28P connector terminals No. 23 and No. 24 individually.

HVAC CONTROL UNIT 28P CONNECTOR

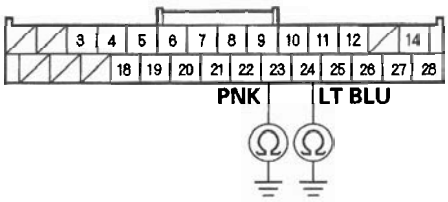

Wire side of female terminals

Is there continuity?

YES—Repair short to body ground in the wire(s) between the HVAC control unit and the air mix control motor.■

NO—Substitute a known-good HVAC control unit, and recheck. If the symptom/indication goes away, replace the original HVAC control unit.■

DTC Troubleshooting (cont'd)

DTC indicator 4: An Open or Short in the Mode Control Motor Circuit

1. Turn the ignition switch OFF and then ON (II).
2. Do the self-diagnostic with the HVAC control unit (see page 21-8).
3. Check for DTCs.

   Is DTC 4 indicated?

   YES—Go to step 4.

   NO—Intermittent failure, check for loose wires or poor connections on the mode control motor circuit.■
4. Turn the ignition switch OFF.
5. Test the mode control motor (see page 21-51).

   Is the mode control motor OK?

   YES—Go to step 6.

   NO—Replace the mode control motor (see page 21-51).■
6. Disconnect the mode control motor 7P connector.
7. Disconnect the HVAC control unit 28P connector.
8. Check for continuity between the following terminals of the HVAC control unit 28P connector and the mode control motor 7P connector.

28P:	7P:
No. 3	No. 6
No. 4	No. 5
No. 5	No. 4
No. 7	No. 3
No. 19	No. 7

HVAC CONTROL UNIT 28P CONNECTOR
Wire side of female terminals

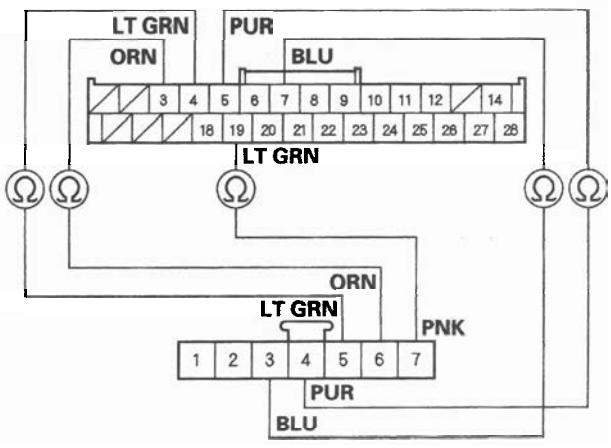

MODE CONTROL MOTOR 7P CONNECTOR
Wire side of female terminals

Is there continuity?

YES—Go to step 9.

NO—Repair open in the wire(s) between the HVAC control unit and the mode control motor.■

9. Check for continuity between body ground and the HVAC control unit 28P connector terminals No. 3, 4, 5 and 7 individually.

HVAC CONTROL UNIT 28P CONNECTOR

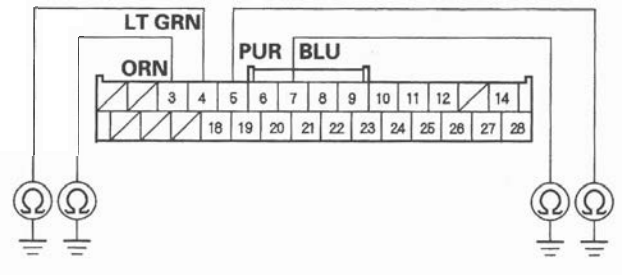

Wire side of female terminals

Is there continuity?

YES—Repair short to body ground in the wire(s) between the HVAC control unit and the mode control motor. ■

NO—Go to step 10.

10. Check for continuity between the HVAC control unit 28P connector terminals as follows.

From terminal	To terminals
3	4, 5, 7
4	5, 7
5	7

Is there continuity between any of the terminals?

YES—Repair the short in the wires. ■

NO—Go to step 11.

11. Turn the ignition switch ON (II), and check the same terminals for voltage to body ground.

HVAC CONTROL UNIT 28P CONNECTOR

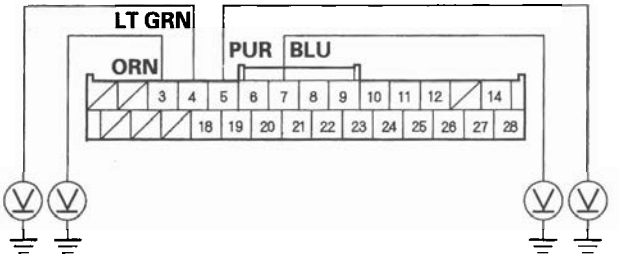

Wire side of female terminals

Is there any voltage?

YES—Repair short to power in the wire(s) between the HVAC control unit and the mode control motor. This short may also damage the HVAC control unit. Repair the short to power before replacing the HVAC control unit. ■

NO—Check for loose wires or poor connections at the HVAC control unit 28P connector and at the mode control motor 7P connector. If the connections are good, substitute a known-good HVAC control unit, and recheck. If the symptom/indication goes away, replace the original HVAC control unit. ■

DTC Troubleshooting (cont'd)

DTC indicator 5: A Problem in the Mode Control Linkage, Doors, or Motor Circuit

1. Turn the ignition switch OFF and then ON (II).
2. Do the self-diagnostic with the HVAC control unit (see page 21-8).
3. Check for DTCs.

   Is DTC 5 indicated?

   YES—Go to step 4.

   NO—Intermittent failure, check for loose wires or poor connections on the mode control motor circuit. ■
4. Turn the ignition switch OFF.
5. Test the mode control motor (see page 21-51).

   Is the mode control motor OK?

   YES—Go to step 6.

   NO—Replace the mode control motor (see page 21-51), or repair the mode control linkage or doors. ■
6. Disconnect the mode control motor 7P connector.
7. Disconnect the HVAC control unit 28P connector.
8. Check for continuity between the following terminals of the HVAC control unit 28P connector and the mode control motor 7P connector.

28P:	7P:
No. 25	No. 1
No. 26	No. 2

HVAC CONTROL UNIT 28P CONNECTOR
Wire side of female terminals

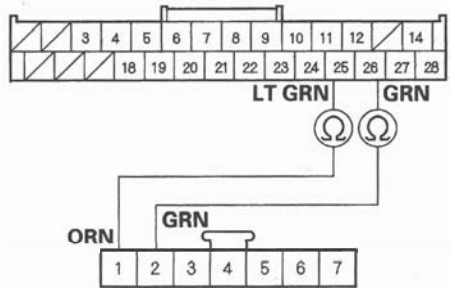

MODE CONTROL MOTOR 7P CONNECTOR
Wire side of female terminals

Is there continuity?

YES—Go to step 9.

NO—Repair open in the wire(s) between the HVAC control unit and the mode control motor. ■

9. Check for continuity between body ground and the HVAC control unit 28P connector terminals No. 25 and No. 26 individually.

HVAC CONTROL UNIT 28P CONNECTOR

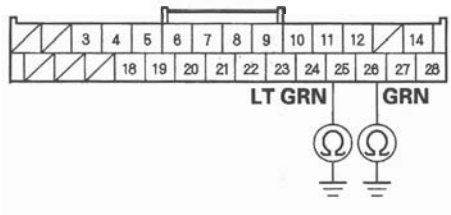

Wire side of female terminals

Is there continuity?

YES—Repair short to body ground in the wire(s) between the HVAC control unit and the mode control motor.■

NO—Substitute a known-good HVAC control unit, and recheck. If the symptom/indication goes away, replace the original HVAC control unit.■

DTC indicator 6: A Problem in the Blower Motor Circuit

NOTE: If the blower motor does not work, the A/C compressor, A/C condenser fan, and radiator fan will not work.

1. Turn the ignition switch OFF and then ON (II).
2. Do the self-diagnostic with the HVAC control unit (see page 21-8).
3. Check for DTCs.

   Is DTC 6 indicated?

   YES—Go to step 4.

   NO—Intermittent failure, check for loose wires or poor connections on the blower motor circuit.■
4. Turn the ignition switch OFF.
5. Check the No. 9 (40 A) fuse in the under-hood fuse/relay box, and the No. 36 (10 A) fuse in the under-dash fuse/relay box.

   Are the fuses OK?

   YES—Go to step 6.

   NO—Replace the fuses, and recheck. If the fuses blow again, check for a short in the No. 9 (40 A) and No. 36 (10 A) fuses circuit.■
6. Connect the blower motor 2P connector terminal No. 2 to body ground with a jumper wire.

BLOWER MOTOR 2P CONNECTOR

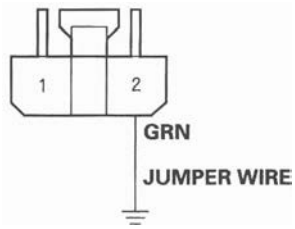

Wire side of female terminals

(cont'd)

DTC Troubleshooting (cont'd)

7. Turn the ignition switch ON (II).

   Does the blower motor run?

   YES—Go to step 8.

   NO—Go to step 23.

8. Turn the ignition switch OFF.
9. Disconnect the jumper wire.
10. Disconnect the power transistor 4P connector.
11. Check for continuity between the power transistor 4P connector terminal No. 2 and body ground.

POWER TRANSISTOR 4P CONNECTOR

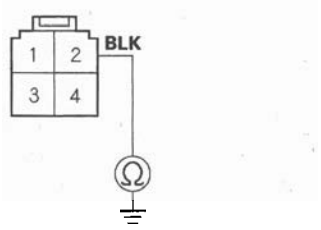

Wire side of female terminals

Is there continuity?

YES—Go to step 12.

NO—Check for an open in the wire between the power transistor and body ground. If the wire is OK, check for poor ground at G401 (see page 22-62).■

12. Connect the power transistor 4P connector terminals No. 2 and No. 4 with a jumper wire.

POWER TRANSISTOR 4P CONNECTOR

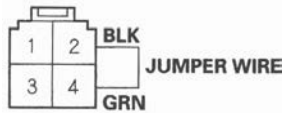

Wire side of female terminals

13. Turn the ignition switch ON (II).

    Does the blower motor run at high speed?

    YES—Go to step 14.

    NO—Repair open in the GRN wire between the power transistor and the blower motor.■

14. Turn the ignition switch OFF.
15. Disconnect the jumper wire.
16. Disconnect the HVAC control unit 28P connector.
17. Check for continuity between body ground and the HVAC control unit 28P connector terminals No. 11 and No. 12 individually.

HVAC CONTROL UNIT 28P CONNECTOR

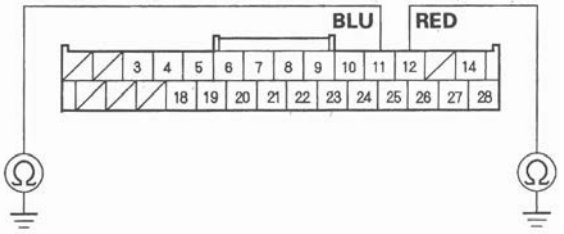

Wire side of female terminals

Is there continuity?

YES—Repair short to body ground in the wire(s) between the HVAC control unit and the power transistor.■

NO—Go to step 18.

DTC Troubleshooting (cont'd)

28. Measure the voltage between the blower motor relay 4P socket terminal No. 1 and body ground.

BLOWER MOTOR RELAY 4P SOCKET

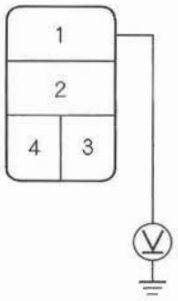

Is there battery voltage?

YES—Go to step 29.

NO—Replace the under-hood fuse/relay box (see page 22-63). ■

29. Turn the ignition switch ON (II).

30. Measure the voltage between the blower motor relay 4P socket terminal No. 3 and body ground.

BLOWER MOTOR RELAY 4P SOCKET

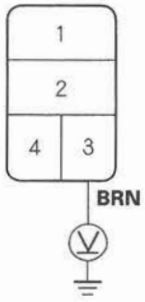

Is there battery voltage?

YES—Go to step 31.

NO—Repair open in the wire between the No. 36 (10 A) fuse in the under-dash fuse/relay box and the blower motor relay. ■

31. Turn the ignition switch OFF.

32. Check for continuity between the blower motor relay 4P socket terminal No. 4 and body ground.

BLOWER MOTOR RELAY 4P SOCKET

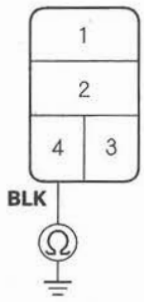

Is there continuity?

YES—Repair open in the WHT wire between the blower motor relay and the blower motor. ■

NO—Check for an open in the wire between the blower motor relay and body ground. If the wire is OK, check for poor ground at G302 (see page 22-62). ■

DTC indicator 7: HVAC Control Unit Internal Error

NOTE: Check the battery condition (see page 22-65) and the charging system (see page 4-24).

1. Turn the ignition switch OFF and then ON (II).
2. Do the self-diagnostic with the HVAC control unit. (see page 21-8).
3. Check for DTCs.

   Is DTC 7 indicated?

   YES—The HVAC control unit is faulty, replace the HVAC control unit (see page 21-53). ■

   NO—Intermittent failure, the HVAC control unit is OK at this time. Check for poor connections at the HVAC control unit and at G503 (see page 22-62). ■

DTC indicator 8: An Open in the Evaporator Temperature Sensor Circuit

1. Turn the ignition switch OFF and then ON (II).
2. Do the self-diagnostic with the HVAC control unit. (see page 21-8).
3. Check for DTCs.

   Is DTC 8 indicated?

   YES—Go to step 4.

   NO—Intermittent failure, check for loose wires or poor connections on the evaporator temperature sensor circuit. ■

4. Turn the ignition switch OFF.
5. Remove the evaporator temperature sensor (see page 21-57) and test it (see page 21-48).

   Is the evaporator temperature sensor OK?

   YES—Go to step 6.

   NO—Replace the evaporator temperature sensor (see page 21-57). ■

(cont'd)

DTC Troubleshooting (cont'd)

6. Disconnect the HVAC control unit 28P connector.

7. Check for continuity between the HVAC control unit 28P connector terminal No. 9 and the evaporator temperature sensor 2P connector terminal No. 2.

HVAC CONTROL UNIT 28P CONNECTOR
Wire side of female terminals

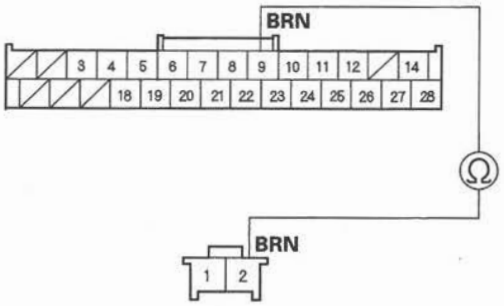

EVAPORATOR TEMPERATURE SENSOR 2P CONNECTOR
Wire side of female terminals

Is there continuity?

YES—Go to step 8.

NO—Repair open in the wire between the HVAC control unit and the evaporator temperature sensor.■

8. Check for continuity between the HVAC control unit 28P connector terminal No. 19 and the evaporator temperature sensor 2P connector terminal No. 1.

HVAC CONTROL UNIT 28P CONNECTOR
Wire side of female terminals

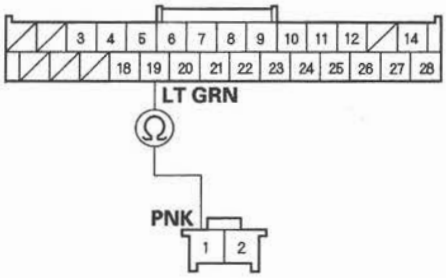

EVAPORATOR TEMPERATURE SENSOR 2P CONNECTOR
Wire side of female terminals

Is there continuity?

YES—Check for loose wires or poor connections at the HVAC control unit 28P connector and at the evaporator temperature sensor 2P connector. If the connections are good, substitute a known-good HVAC control unit, and recheck. If the symptom/indication goes away, replace the original HVAC control unit.■

NO—Repair open in the wire between the HVAC control unit and the evaporator temperature sensor.■

DTC indicator 9: A Short in the Evaporator Temperature Sensor Circuit

1. Turn the ignition switch OFF and then ON (II).
2. Do the self-diagnostic with the HVAC control unit (see page 21-8).
3. Check for DTCs.

   Is DTC 9 indicated?

   YES—Go to step 4.

   NO—Intermittent failure. ■
4. Turn the ignition switch OFF.
5. Remove the evaporator temperature sensor (see page 21-57) and test it (see page 21-48).

   Is the evaporator temperature sensor OK?

   YES—Go to step 6.

   NO—Replace the evaporator temperature sensor (see page 21-57). ■
6. Disconnect the HVAC control unit 28P connector.
7. Check for continuity between body ground and the HVAC control unit 28P connector terminal No. 9.

HVAC CONTROL UNIT 28P CONNECTOR

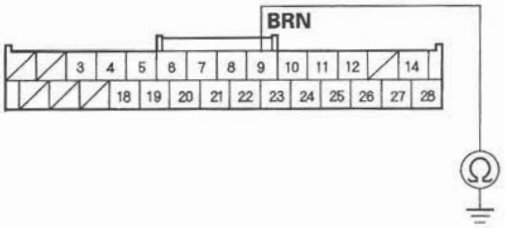

Wire side of female terminals

Is there continuity?

YES—Repair short to body ground in the wire between the HVAC control unit and the evaporator temperature sensor. ■

NO—Go to step 8.

8. Check for continuity between the HVAC control unit 28P connector terminals No. 9 and No. 19.

HVAC CONTROL UNIT 28P CONNECTOR

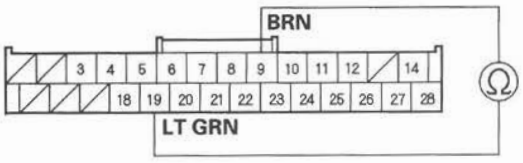

Wire side of female terminals

Is there continuity?

YES—Repair short in the wires between the HVAC control unit and the evaporator temperature sensor. ■

NO—Substitute a known-good HVAC control unit, and recheck. If the symptom/indication goes away, replace the original HVAC control unit. ■

Recirculation Control Motor Circuit Troubleshooting

1. Check the No. 36 (10 A) fuse in the under-dash fuse/relay box.

   Is the fuse OK?

   YES—Go to step 2.

   NO—Replace the fuse, and recheck. If the fuse blows again, check for a short in the No. 36 (10 A) fuse circuit. ■

2. Disconnect the recirculation control motor 7P connector.

3. Turn the ignition switch ON (II).

4. Measure the voltage between the recirculation control motor 7P connector terminal No. 1 and body ground.

   RECIRCULATION CONTROL MOTOR 7P CONNECTOR

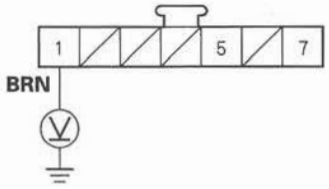

Wire side of female terminals

   Is there battery voltage?

   YES—Go to step 5.

   NO—Repair open in the wire between the No. 36 (10 A) fuse in the under-dash fuse/relay box and the recirculation control motor. ■

5. Turn the ignition switch OFF.

6. Test the recirculation control motor (see page 21-52).

   Is the recirculation control motor OK?

   YES—Go to step 7.

   NO—Replace the recirculation control motor (see page 21-52), or repair the recirculation control linkage or door. ■

7. Disconnect the HVAC control unit 28P connector.

8. Check for continuity between body ground and the HVAC control unit 28P connector terminals No. 21 and No. 22 individually.

   HVAC CONTROL UNIT 28P CONNECTOR

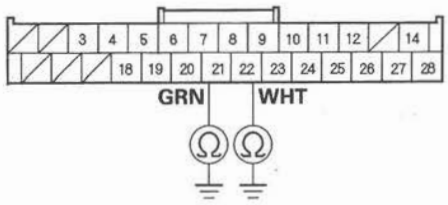

Wire side of female terminals

   Is there continuity?

   YES—Repair short to body ground in the wire(s) between the HVAC control unit and the recirculation control motor. ■

   NO—Go to step 9.

9. Turn the ignition switch ON (II), and check the same terminals for voltage to body ground.

HVAC CONTROL UNIT 28P CONNECTOR

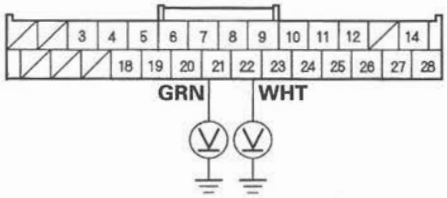

Wire side of female terminals

Is there any voltage?

YES—Repair short to power in the wire(s) between the HVAC control unit and the recirculation control motor. This short may also damage the HVAC control unit. Repair the short to power before replacing the HVAC control unit. ■

NO—Go to step 10.

10. Turn the ignition switch OFF.

11. Check for continuity between the following terminals of the HVAC control unit 28P connector and the recirculation control motor 7P connector.

28P:	7P:
No. 21	No. 7
No. 22	No. 5

HVAC CONTROL UNIT 28P CONNECTOR
Wire side of female terminals

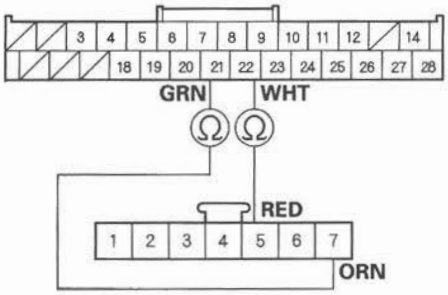

RECIRCULATION CONTROL MOTOR 7P CONNECTOR
Wire side of female terminals

Is there continuity?

YES—Check for loose wires or poor connections at the HVAC control unit 28P connector and at the recirculation control motor 7P connector. If the connections are good, substitute a known-good HVAC control unit, and recheck. If the symptom/indication goes away, replace the original HVAC control unit. ■

NO—Repair open in the wire(s) between the HVAC control unit and the recirculation control motor. ■

HVAC Control Power and Ground Circuit Troubleshooting

1. Check the No. 36 (10 A) fuse in the under-dash fuse/relay box.

   Is the fuse OK?

   YES—Go to step 2.

   NO—Replace the fuse, and recheck. If the fuse blows again, check for a short in the No. 36 (10 A) fuse circuit. ■

2. Disconnect the HVAC control unit 28P connector.

3. Turn the ignition switch ON (II).

4. Measure the voltage between the HVAC control unit 28P connector terminal No. 27 and body ground.

HVAC CONTROL UNIT 28P CONNECTOR

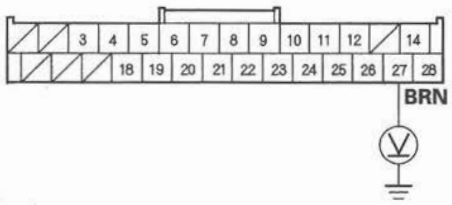

Wire side of female terminals

Is there battery voltage?

YES—Go to step 5.

NO—Repair open in the wire between the No. 36 (10 A) fuse in the under-dash fuse/relay box and the HVAC control unit. ■

5. Turn the ignition switch OFF.

6. Check for continuity between the HVAC control unit 28P connector terminal No. 18 and body ground.

HVAC CONTROL UNIT 28P CONNECTOR

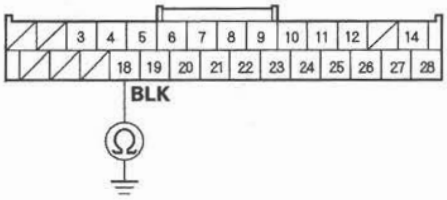

Wire side of female terminals

Is there continuity?

YES—Check for loose wires or poor connections at the HVAC control unit 28P connector. If the connections are good, substitute a known-good HVAC control unit, and recheck. ■

NO—Check for an open in the wire between the HVAC control unit and body ground. If the wire is OK, check for poor ground at G503 (see page 22-62). ■

Radiator and A/C Condenser Fan Low Speed Circuit Troubleshooting

NOTE:
- Do not use this troubleshooting procedure if the A/C compressor is inoperative. Refer to the symptom troubleshooting index.
- Before doing symptom troubleshooting, check for powertrain DTCs (see page 11-3).

1. Check the No. 7 (20 A) fuse in the under-hood fuse/relay box, and the No. 36 (10 A) fuse in the under-dash fuse/relay box.

   Are the fuses OK?

   YES—Go to step 2.

   NO—Replace the fuses, and recheck. If the fuses blow again, check for a short in the No. 7 (20 A) and No. 36 (10 A) fuses circuit.■

2. Remove the radiator fan relay from the under-hood fuse/relay box, and test it (see page 22-66).

   Is the relay OK?

   YES—Go to step 3.

   NO—Replace the radiator fan relay.■

3. Connect the HDS to the DLC.

4. Turn the ignition switch ON (II).

5. Turn on the A/C on.

6. Check the FAN LOW CTRL in the PGM-FI Data List with the HDS.

   Is the FAN LOW CTRL on?

   YES—Go to step 7.

   NO—Substitute a known-good PCM (see page 11-8), and retest. If the symptom/indication goes away with a known-good PCM, replace the original PCM (see page 11-219).■

7. Measure the voltage between the radiator fan relay 4P socket terminal No. 1 and body ground.

RADIATOR FAN RELAY 4P SOCKET

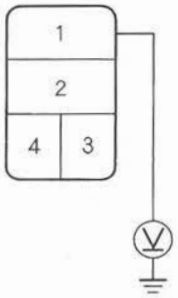

Is there battery voltage?

YES—Go to step 8.

NO—Replace the under-hood fuse/relay box (see page 22-63).■

8. Connect the radiator fan relay 4P socket terminals No. 1 and No. 2 with a jumper wire.

RADIATOR FAN RELAY 4P SOCKET

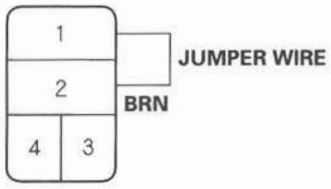

Do the A/C condenser and radiator fans run on low?

YES—Go to step 9.

NO—Go to step 18.

(cont'd)

Radiator and A/C Condenser Fan Low Speed Circuit Troubleshooting (cont'd)

9. Disconnect the jumper wire.
10. Turn the ignition switch ON (II).
11. Measure the voltage between the radiator fan relay 4P socket terminal No. 3 and body ground.

RADIATOR FAN RELAY 4P SOCKET

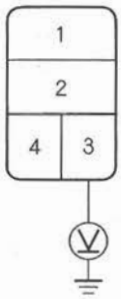

Is there battery voltage?

YES—Go to step 12.

NO—Go to step 36.

12. Turn the ignition switch OFF.
13. Reinstall the radiator fan relay.
14. Jump the SCS line with the HDS.

    NOTE: This step must be done to protect the powertrain control module (PCM) from damage.

15. Disconnect PCM connector A (44P).
16. Connect the PCM connector A (44P) terminal No. 4 to body ground with a jumper wire.

PCM CONNECTOR A (44P)

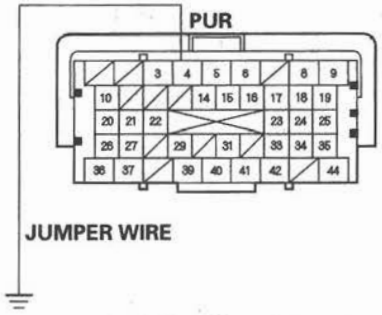

Terminal side of female terminals

17. Turn the ignition switch ON (II).

    Do the A/C condenser and radiator fans run on low?

    YES—Check for loose wires or poor connections at PCM connector A (44P) terminal No. 4. If the connections are good, substitute a known-good PCM, and recheck. If the symptom/indication goes away, replace the original PCM (see page 11-219). ■

    NO—Repair open in the wire between the radiator fan relay and the PCM. ■

18. Disconnect the jumper wire.
19. Reinstall the radiator fan relay.
20. Disconnect the radiator fan 2P connector.
21. Turn the ignition switch ON (II), then set the A/C button and fan control dial ON.

22. Measure the voltage between the radiator fan 2P connector terminal No. 2 and body ground.

RADIATOR FAN 2P CONNECTOR

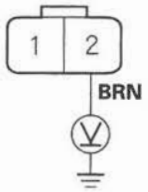

Wire side of female terminals

Is there battery voltage?

YES—Go to step 23.

NO—Repair open in the wire between the radiator fan relay and the radiator fan. ■

23. Set the A/C button and fan control dial to OFF, then turn the ignition switch OFF.

24. Reconnect the radiator fan 2P connector.

25. Connect the radiator fan 2P connector terminal No. 1 to body ground with a jumper wire.

RADIATOR FAN 2P CONNECTOR

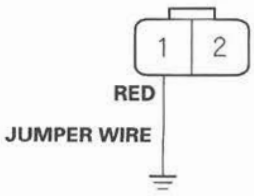

Wire side of female terminals

26. Turn the ignition switch ON (II), then set the A/C button and fan control dial to ON.

Does the radiator fan run?

YES—Go to step 27.

NO—Replace the radiator fan motor (see page 10-15). ■

27. Set the A/C button and fan control dial to OFF, then turn the ignition switch OFF.

28. Disconnect the jumper wire.

29. Remove the fan control relay from the under-hood relay box, and test it (see page 22-66).

Is the relay OK?

YES—Go to step 29.

NO—Replace the fan control relay. ■

30. Turn the ignition switch ON (II), then set the A/C button and fan control dial ON.

31. Measure the voltage between the fan control relay 5P socket terminal No. 1 and body ground.

FAN CONTROL RELAY 5P SOCKET

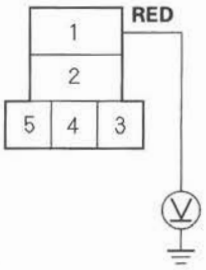

Is there battery voltage?

YES—Go to step 32.

NO—Repair open in the wire between the radiator fan and the fan control relay. ■

32. Set the A/C button and fan control dial to OFF, then turn the ignition switch OFF.

(cont'd)

Radiator and A/C Condenser Fan Low Speed Circuit Troubleshooting (cont'd)

33. Disconnect the A/C condenser fan 2P connector.

34. Check for continuity between the fan control relay 5P socket terminal No. 4 and the A/C condenser fan 2P connector terminal No. 2.

FAN CONTROL RELAY 5P SOCKET

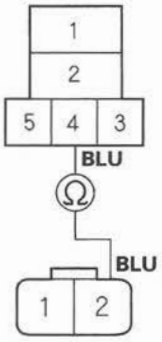

A/C CONDENSER FAN 2P CONNECTOR
Wire side of female terminals

Is there continuity?

YES—Go to step 35.

NO—Repair open in the wire between the fan control relay and the A/C condenser fan. ■

35. Check for continuity between the A/C condenser fan 2P connector terminal No. 1 and body ground.

A/C CONDENSER FAN 2P CONNECTOR

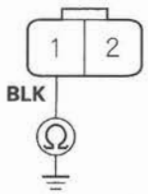

Wire side of female terminals

Is there continuity?

YES—Replace the A/C condenser fan motor (see page 10-15). ■

NO—Check for an open in the wire between the A/C condenser fan and body ground. If the wire is OK, check for poor ground at G301 (see page 22-62). ■

36. Turn the ignition switch OFF.

37. Remove A/C diode A from the under-hood fuse/relay box.

38. Using the diode setting (⊣◀⊢) on a DVOM, check for current flow in both directions between the A/C diode A terminals No. 1 and No. 2.

A/C DIODE A

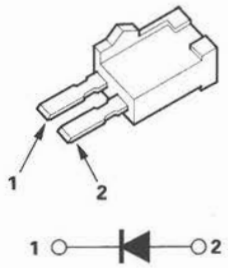

Is there current flow in only one direction?

YES—Go to step 39.

NO—Replace A/C diode A. ■

39. Turn the ignition switch ON (II).

40. Measure the voltage between the A/C diode A 2P socket terminal No. 2 and body ground.

A/C DIODE A 2P SOCKET

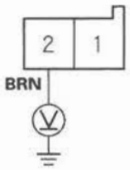

Is there battery voltage?

YES—Replace the under-hood fuse/relay box (see page 22-63). ■

NO—Repair open in the wire between the No. 36 (10 A) fuse in the under-dash fuse/relay box and A/C diode A. ■

A/C Condenser Fan High Speed Circuit Troubleshooting

NOTE:
- Do not use this troubleshooting procedure if the radiator fan and/or A/C compressor is inoperative. Refer to the symptom troubleshooting index.
- Before doing symptom troubleshooting, check for powertrain DTCs (see page 11-3).

1. Check the No. 6 (20 A) and No. 15 (7.5 A) fuses in the under-hood fuse/relay box.

   Are the fuses OK?

   YES—Go to step 2.

   NO—Replace the fuses, and recheck. If the fuses blow again, check for a short in the No. 6 (20 A) and No. 15 (7.5 A) fuses circuit.■

2. Remove the A/C condenser fan relay from the under-hood fuse/relay box, and test it (see page 22-66).

   Is the relay OK?

   YES—Go to step 3.

   NO—Replace the A/C condenser fan relay.■

3. Measure the voltage between the A/C condenser fan relay 4P socket terminal No. 1 and body ground.

   A/C CONDENSER FAN RELAY 4P SOCKET

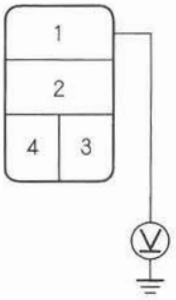

   Is there battery voltage?

   YES—Go to step 4.

   NO—Replace the under-hood fuse/relay box (see page 22-63).■

4. Connect the A/C condenser fan relay 4P socket terminals No. 1 and No. 2 with a jumper wire.

   A/C CONDENSER FAN RELAY 4P SOCKET

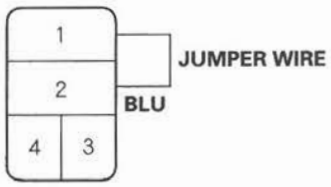

   Does the A/C condenser fan run on high?

   YES—Go to step 5.

   NO—Replace the under-hood fuse/relay box (see page 22-63).■

5. Disconnect the jumper wire.

6. Turn the ignition switch ON (II).

7. Measure the voltage between the A/C condenser fan relay 4P socket terminal No. 4 and body ground.

   A/C CONDENSER FAN RELAY 4P SOCKET

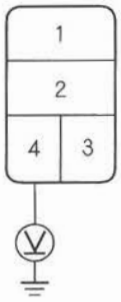

   Is there battery voltage?

   YES—Go to step 8.

   NO—Go to step 14.

(cont'd)

A/C Condenser Fan High Speed Circuit Troubleshooting (cont'd)

8. Turn the ignition switch OFF.
9. Reinstall the A/C condenser fan relay.
10. Jump the SCS line with the HDS.

    NOTE: This step must be done to protect the powertrain control module (PCM) from damage.
11. Disconnect PCM connector A (44P).
12. Connect the PCM connector A (44P) terminal No. 5 to body ground with a jumper wire.

PCM CONNECTOR A (44P)

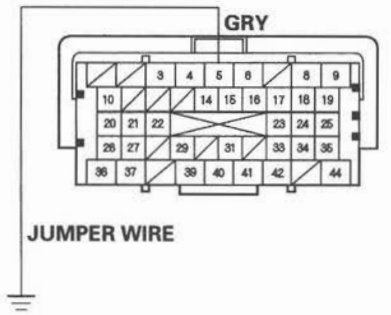

Terminal side of female terminals

13. Turn the ignition switch ON (II).

    Does the A/C condenser fan run on high?

    YES—Check for loose wires or poor connections at PCM connector A (44P) terminal No. 5. If the connections are good, substitute a known-good PCM, and recheck. If the symptom/indication goes away, replace the original PCM (see page 11-219). ■

    NO—Repair open in the wire between the A/C condenser fan relay and the PCM. ■
14. Remove A/C diode B from the under-hood fuse/relay box.
15. Turn the ignition switch ON (II).
16. Measure the voltage between the A/C diode B 2P socket terminal No. 2 and body ground.

A/C DIODE B 2P SOCKET

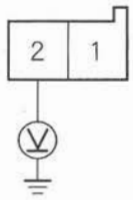

Is there battery voltage?

YES—Go to step 17.

NO—Replace the under-hood fuse/relay box (see page 22-63). ■
17. Using the diode setting (⊣◀⊢) on a DVOM, check for current flow in both directions between the A/C diode B terminals No. 1 and No. 2.

A/C DIODE B

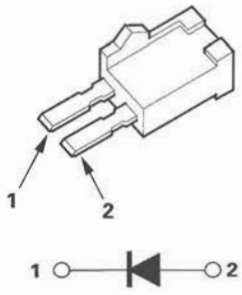

Is there current flow in only one direction?

YES—Replace the under-hood fuse/relay box (see page 22-63). ■

NO—Replace A/C diode B. ■

A/C Compressor Clutch Circuit Troubleshooting

NOTE:
- It is normal for the A/C compressor to turn off under certain conditions, such as low idle, high engine coolant temperature, hard acceleration, or high/low pressure.
- Do not use this troubleshooting procedure if the fans are also inoperative with the A/C on. Refer to the symptom troubleshooting index.
- Before doing any symptom troubleshooting, check for powertrain DTCs (see page 11-3).

1. Check the No. 20 (7.5 A) fuse in the under-hood fuse/relay box, and the No. 36 (10 A) fuse in the under-dash fuse/relay box.

   Are the fuses OK?

   YES—Go to step 2.

   NO—Replace the fuses and recheck. If the fuses blow again, check for a short in the No. 20 (7.5 A) and No. 36 (10 A) fuses circuit.■

2. Connect the HDS to the DLC.

3. Start the engine.

4. Turn on the A/C.

5. Check the A/C CLUTCH in the PGM-FI Data List with the HDS.

   Is the A/C CLUTCH on?

   YES—Go to step 7.

   NO—Go to step 6.

6. Using the HDS, confirm the following values in the PGM-FI Data List at idle.

TP SENSOR	About 0.5 V
RPM	600—700
ECT SENSOR 2	176—212 °F (80—100 °C)
A/C SWITCH	ON
A/C CLUTCH	ON
A/C PRESSURE SENSOR	196—3,138 kPa (2—32 kgf/cm²) [28—455 psi]

   Are all the values within specifications?

   YES—Go to step 7.

   NO—Troubleshoot the value that is not within the specifications.■

7. Remove the A/C compressor clutch relay from the under-hood fuse/relay box, and test it (see page 22-66).

   Is the relay OK?

   YES—Go to step 8.

   NO—Replace the A/C compressor clutch relay.■

8. Measure the voltage between the A/C compressor clutch relay 4P socket terminal No. 1 and body ground.

A/C COMPRESSOR CLUTCH RELAY 4P SOCKET

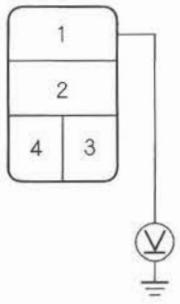

   Is there battery voltage?

   YES—Go to step 9.

   NO—Replace the under-hood fuse/relay box (see page 22-63).■

(cont'd)

A/C Compressor Clutch Circuit Troubleshooting (cont'd)

9. Connect the A/C compressor clutch relay 4P socket terminals No. 1 and No. 2 with a jumper wire.

A/C COMPRESSOR CLUTCH RELAY 4P SOCKET

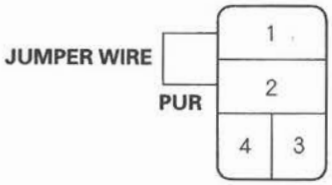

Does the A/C compressor clutch click?

YES—Go to step 10.

NO—Go to step 19.

10. Disconnect the jumper wire.
11. Turn the ignition switch ON (II).
12. Measure the voltage between the A/C compressor clutch relay 4P socket terminal No. 3 and body ground.

A/C COMPRESSOR CLUTCH RELAY 4P SOCKET

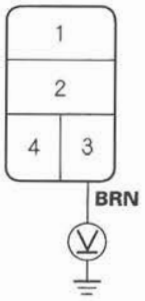

Is there battery voltage?

YES—Go to step 13.

NO—Repair open in the wire between the No. 36 (10 A) fuse in the under-dash fuse/relay box and the A/C compressor clutch relay. ■

13. Turn the ignition switch OFF.
14. Reinstall the A/C compressor clutch relay.
15. Jump the SCS line with the HDS.

    NOTE: This step must be done to protect the powertrain control module (PCM) from damage.

16. Disconnect PCM connector A (44P).
17. Connect the PCM connector A (44P) terminal No. 14 to body ground with a jumper wire.

PCM CONNECTOR A (44P)

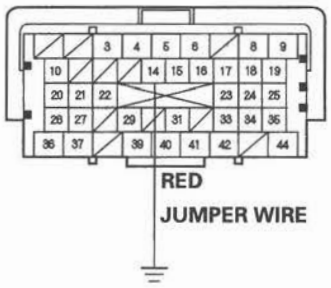

Terminal side of female terminals

18. Turn the ignition switch ON (II).

Does the A/C compressor click?

YES—Check for loose wires or poor connections at PCM connector A (44P). If the connections are good, check the PCM grounds. If the grounds are good, substitute a known-good PCM, and recheck. If the symptom/indication goes away, replace the original PCM (see page 11-219). ■

NO—Repair open in the wire between the A/C compressor clutch relay and the PCM. ■

19. Disconnect the jumper wire.

20. Disconnect the A/C compressor clutch 3P connector.

21. Check for continuity between the A/C compressor clutch relay 4P socket terminal No. 2 and the A/C compressor clutch 3P connector terminal No. 3.

A/C COMPRESSOR CLUTCH RELAY 4P SOCKET

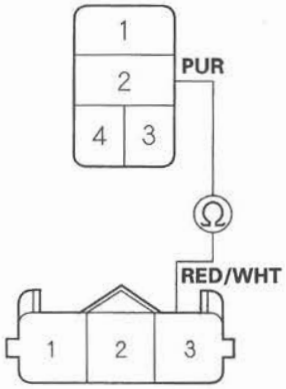

A/C COMPRESSOR CLUTCH 3P CONNECTOR
Wire side of female terminals

Is there continuity?

YES—Check the A/C compressor clutch clearance, and the compressor clutch field coil (see page 21-63). Repair as needed.■

NO—Repair open in the wire between the A/C compressor clutch relay and the A/C compressor clutch.■

NOTE:
- Use this troubleshooting procedure if the A/C compressor, the A/C condenser fan, and radiator fan are inoperative.
- Before doing symptom troubleshooting, check for and resolve any powertrain DTCs (see page 11-3).

1. Turn the ignition switch ON (II).

2. Check if the blower motor operates at all speeds.

   Does the blower motor operate at all speeds?

   YES—Go to step 3.

   NO—Repair the problem in the blower motor circuit.■

3. Turn the ignition switch OFF.

4. Disconnect the HVAC control unit 28P connector.

5. Turn the ignition switch ON (II).

6. Measure the voltage between the HVAC control unit 28P connector terminal No. 10 and body ground.

HVAC CONTROL UNIT 28P CONNECTOR

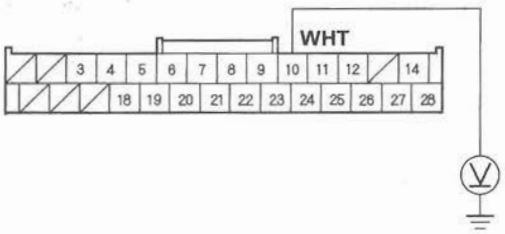

Wire side of female terminals

Is there voltage?

YES—Go to step 13.

NO—Go to step 7.

(cont'd)

A/C Signal Circuit Troubleshooting (cont'd)

7. Turn the ignition switch OFF.
8. Disconnect the A/C compressor clutch 3P connector.
9. Turn the ignition switch ON (II).
10. Measure the voltage between the A/C compressor clutch 3P connector terminal No. 1 and body ground.

A/C COMPRESSOR CLUTCH 3P CONNECTOR

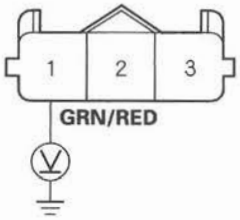

Wire side of female terminals

Is there battery voltage?

YES—Go to step 11.

NO—Repair open in the wire between the A/C compressor and the MICU. If the wire is OK, substitute a known-good MICU and recheck. If the symptom goes away, replace the original MICU. ■

11. Test the A/C compressor thermal protector (see page 21-63).

Is the A/C compressor thermal protector OK?

YES—Go to step 12.

NO—Replace the A/C compressor thermal protector (see page 21-65). ■

12. Check for continuity between the HVAC control unit 28P connector terminal No. 10 and the A/C compressor clutch 3P connector terminal No. 2.

HVAC CONTROL UNIT 28P CONNECTOR
Wire side of female terminals

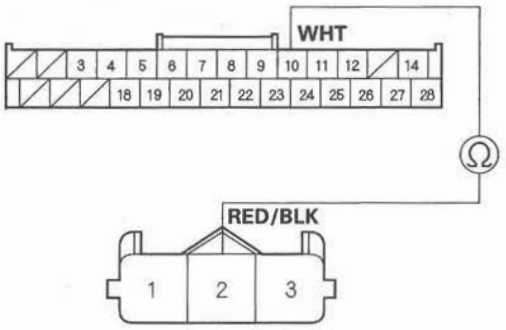

A/C COMPRESSOR CLUTCH 3P CONNECTOR
Wire side of female terminals

Is there continuity?

YES—Check for loose wires or poor connections at the HVAC control unit 28P connector and at the A/C compressor clutch 3P connector. ■

NO—Repair open in the wire between the HVAC control unit and A/C compressor. ■

13. Turn the ignition switch OFF.

14. Measure the evaporator temperature sensor resistance between the HVAC control unit 28P connector terminals No. 9 and No. 19.

HVAC CONTROL UNIT 28P CONNECTOR

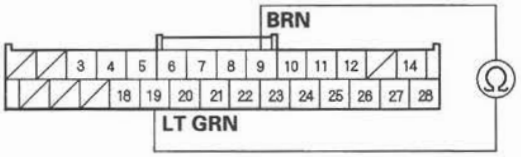

Wire side of female terminals

Is resistance less than 24 kΩ ?

YES—Check for loose wires or poor connections at the HVAC control unit 28P connector. If the connections are good, substitute a known-good HVAC control unit and recheck. If the symptom goes away, replace the original HVAC control unit. ■

NO—Test the evaporator temperature sensor (see page 21-48). ■

Evaporator Temperature Sensor Test

1. Remove the evaporator core and the evaporator temperature sensor (see page 21-57).
2. Dip the sensor in ice water, and measure the resistance between its terminals.

EVAPORATOR TEMPERATURE SENSOR

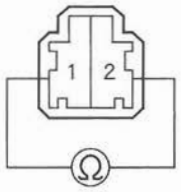

Terminal side of male terminals

3. Then pour warm water on the sensor, and check for a change in resistance.
4. Compare the resistance readings with the specifications shown in the graph; the resistance should be within the specifications.

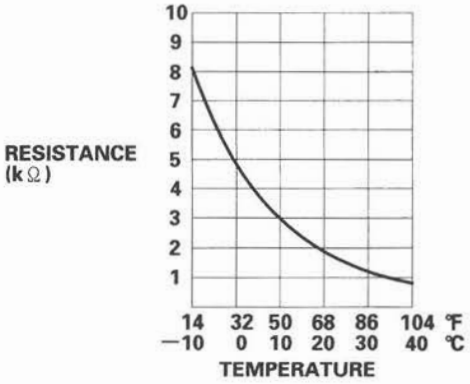

5. If the resistance is not as specified, replace the evaporator temperature sensor (see page 21-57).

Power Transistor Test

1. Remove the passenger's dashboard undercover (see page 20-105).

2. Disconnect the 4P connector from the power transistor.

3. Measure the resistance between the No. 3 and No. 4 terminals of the power transistor. It should be about 1.5 kΩ.

   - If the resistance is within the specifications, go to step 4.
   - If the resistance is not within the specifications, replace the power transistor.

   NOTE: Also check the blower motor. Power transistor failuer can be caused by a defective blower motor.

POWER TRANSISTOR

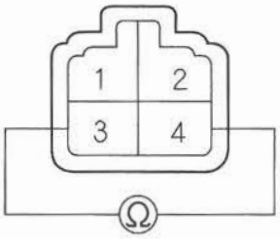

4. Carefully release the lock tab on the No. 1 terminal (RED) (A) in the 4P connector, then remove the terminal and insulate it from body ground.

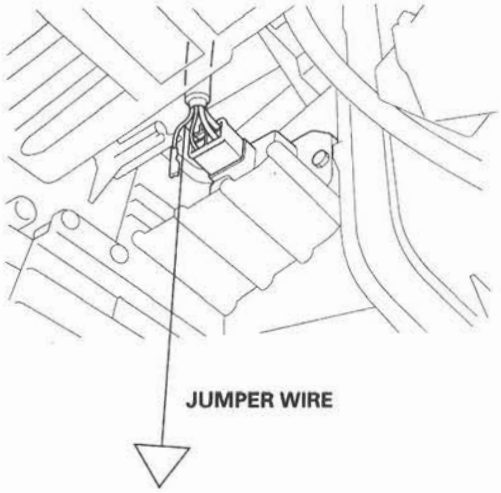

5. Reconnect the 4P connector to the power transistor.

6. Make sure the RED wire is completely isolated, then supply 12 V to the No. 1 cavity with a jumper wire.

7. Turn the ignition switch ON (II), and check that the blower motor runs.

   - If the blower motor does not run, replace the power transistor.

     NOTE: A faulty blower motor can cause the power transistor to fail. If the power transistor is replaced, also check the blower motor for binding, and replace it if necessary.

   - If the blower motor runs, the power transistor is OK.

Air Mix Control Motor Test

NOTE: Before testing, check for HVAC DTCs (see page 21-8).

1. Disconnect the 7P connector from the air mix control motor.

   NOTICE
   Incorrectly applying power and ground to the air mix control motor will damage it. Follow the instructions carefully.

2. Connect battery power to the No. 1 terminal of the air mix control motor, and ground the No. 2 terminal; the air mix control motor should run, and stop at Max Hot. If it doesn't, reverse the connections; the air mix control motor should run, and stop at Max Cool. When the air mix control motor stops running, disconnect battery power immediately.

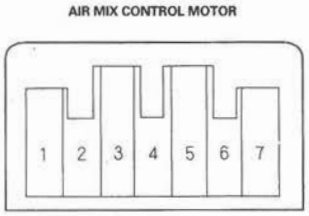

3. If the air mix control motor did not run in step 2, remove it, then check the air mix control linkage and door for smooth movement.

   - If the linkage and door move smoothly, replace the air mix control motor (see page 21-50).
   - If the linkage or door sticks or binds, repair them as needed.
   - If the air mix control motor runs smoothly, go to step 4.

4. Measure the resistance between the No. 5 and No. 7 terminals. It should be between 4.2 to 7.8 kΩ.

5. Reconnect the air mix control motor 7P connector, then turn the ignition switch ON (II).

6. Using the backprobe set, measure the voltage between the No. 3 and No. 7 terminals.

   Max Cool: about 0.5 V
   Max Hot: about 4.5 V

7. If either the resistance or voltage readings are not as specified, replace the air mix control motor (see page 21-50).

Air Mix Control Motor Replacement

1. Disconnect the 7P connector (A) from the air mix control motor (B). Remove the self-tapping screws and the air mix control motor from the heater unit.

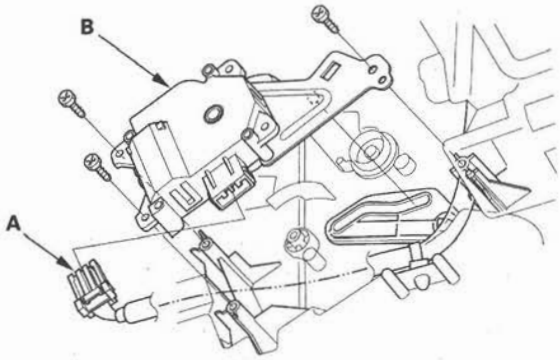

2. Install the motor in the reverse order of removal. Make sure the pin on the motor is properly engaged with the linkage. After installation, make sure the motor runs smoothly.

Mode Control Motor Test

NOTE: Before testing, check for HVAC DTCs (see page 21-8).

1. Disconnect the 7P connector from the mode control motor.

   NOTICE
   Incorrectly applying power and ground to the mode control motor will damage it. Follow the instructions carefully.

2. Connect battery power to the No. 1 terminal of the mode control motor, and ground the No. 2 terminal; the mode control motor should run smoothly, and stop at Vent. If it doesn't, reverse the connections; the mode control motor should run smoothly, and stop at Defrost. When the mode control motor stops running, disconnect battery power immediately.

MODE CONTROL MOTOR

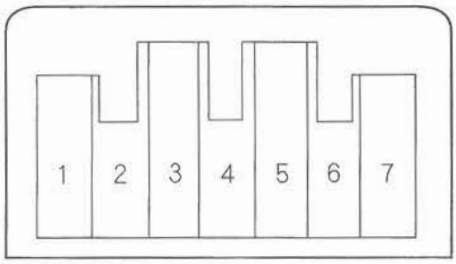

3. If the mode control motor did not run in step 2, remove it, then check the mode control linkage and doors for smooth movement.

   - If the linkage and doors move smoothly, replace the mode control motor (see page 21-51).
   - If the linkage or doors stick or bind, repair them as needed.
   - If the mode control motor runs smoothly, go to step 4.

4. Use a digital multimeter with an output of 1 mA or less at the 20 kΩ range. With the mode control motor running as in step 2, check for continuity between the No. 3, 4, 5, and 6 terminals and the No. 7 terminal individually. There should be continuity for a moment at each terminal as the motor moves past the switch's terminal.

5. If there is no continuity for a moment at each terminal, replace the mode control motor (see page 21-51).

Mode Control Motor Replacement

1. Remove the glove box (see page 20-105).

2. Remove the wire harness clips (A), the self-tapping screws, and the passenger's heater duct (B).

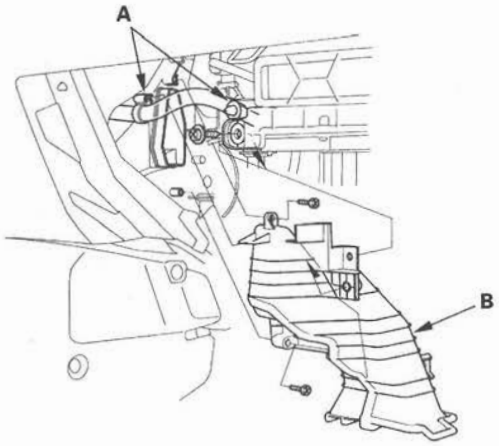

3. Disconnect the 7P connector (A) from the mode control motor (B). Remove the self-tapping screws and the mode control motor from the heater unit.

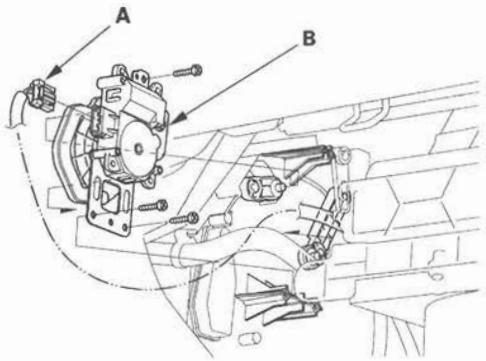

4. Install the motor in the reverse order of removal. Make sure the pin on the motor is properly engaged with the linkage. After installation, make sure the motor runs smoothly.

Recirculation Control Motor Test

NOTE: Before testing, check for HVAC DTCs (see page 21-8).

1. Disconnect the 7P connector from the recirculation control motor.

NOTICE
Incorrectly applying power and ground to the recirculation control motor will damage it. Follow the instructions carefully.

2. Connect battery power to the No. 1 terminal of the recirculation control motor, and ground the No. 5 and No. 7 terminals; the recirculation control motor should run smoothly. To avoid damaging the recirculation control motor, do not reverse power and ground. Disconnect the No. 5 or No. 7 terminals from ground; the recirculation control motor should stop at Fresh (when the No. 5 terminal is disconnected) or Recirculate (when the No. 7 terminal is disconnected). Don't cycle the recirculation control motor for a long time.

RECIRCULATION CONTROL MOTOR

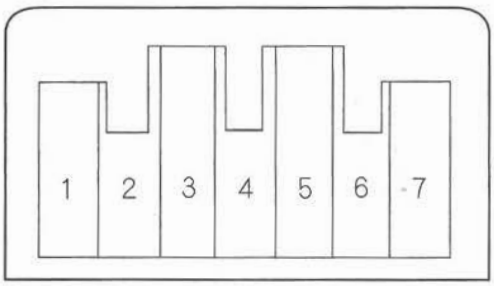

3. If the recirculation control motor did not run in step 2, remove it, then check the recirculation control linkage and door for smooth movement.

- If the linkage and door move smoothly, replace the recirculation control motor (see page 21-52).
- If the linkage or door stick or bind, repair them as needed.

Recirculation Control Motor Replacement

1. Remove the glove box (see page 20-105).

2. Disconnect the 7P connector (A) from the recirculation control motor (B). Remove the self-tapping screws and the recirculation control motor from the blower unit.

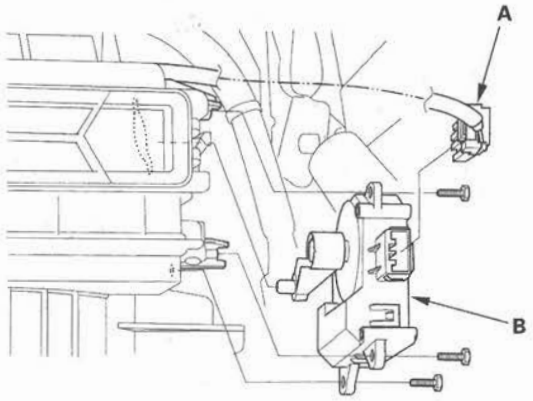

3. Install the motor in the reverse order of removal. Make sure the pin on the motor is properly engaged with the linkage. After installation, make sure the motor runs smoothly.

HVAC Control Unit Removal/Installation

1. Move the shift lever to position 1.

2. Place protective tape (A) on both sides of the dashboard next to the HVAC control unit.

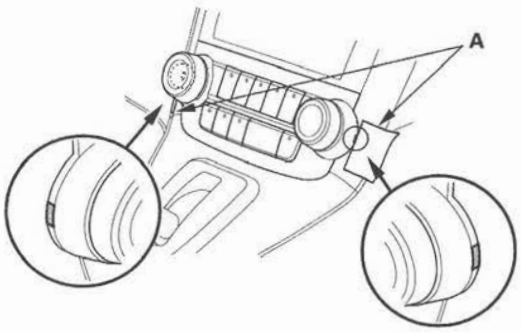

3. Insert a flat-tip screwdriver in the groove on each side, then pull straight out on both screwdriver shafts.

   NOTE: Do not pry with the flat-tip screwdrivers.

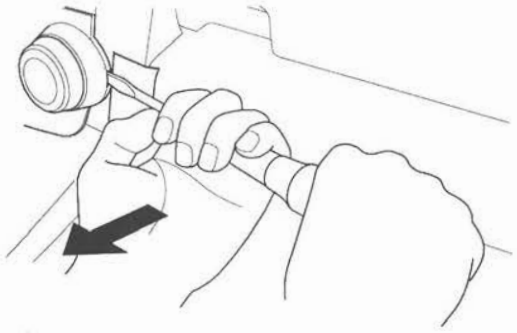

4. Remove the HVAC control unit (A). Disconnect the connector (B), then remove the harness clip (C).

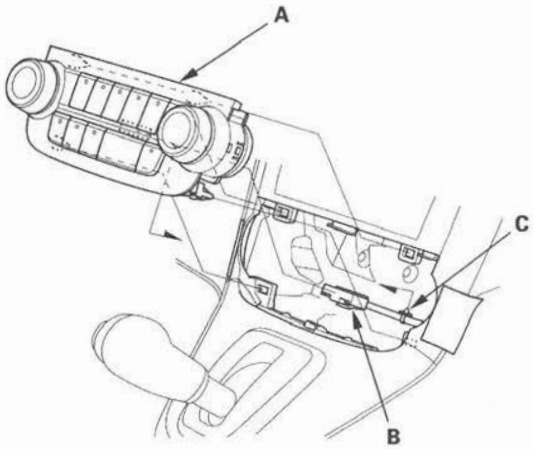

5. Install the control panel in the reverse order of removal. After installation, operate the various functions to make sure they work properly.

6. Run the self-diagnosis function to confirm that there are no problem in the system (see page 21-8).

Dust and Pollen Filter Replacement

1. Open the glove box. Remove the glove box stop on right side, then let the glove box hang down (see page 20-105).

2. Remove the dust and pollen filter assembly (A) from the evaporator.

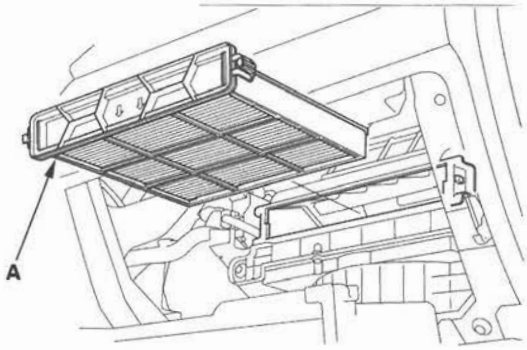

3. Remove the filter (A) from the housing (B), and replace the filter.

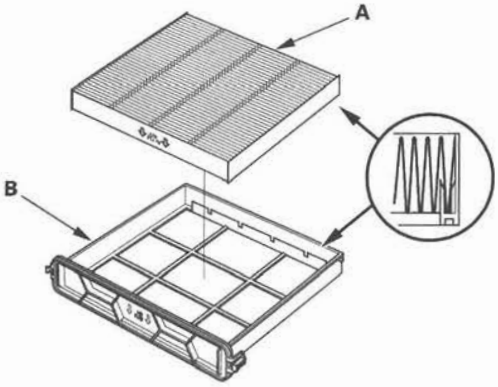

4. Install the filter in the reverse order of removal. Make sure that there is no air leaking out of the blower unit.

Blower Unit Removal/Installation

1. Remove the glove box (see page 20-105).

2. Disconnect the connector (A), then remove the connector clip (B), the wire harness clips (C), the bolts, and the glove box frame (D).

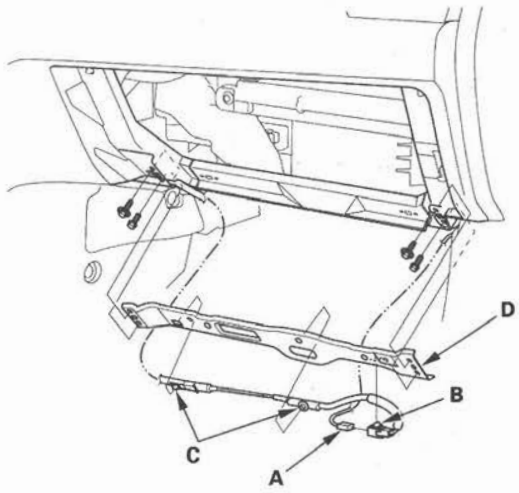

3. Cut the plastic cross brace (A) in the glove box opening with diagonal cutters in the area shown. Retain plastic cross brace to be reinstalled later.

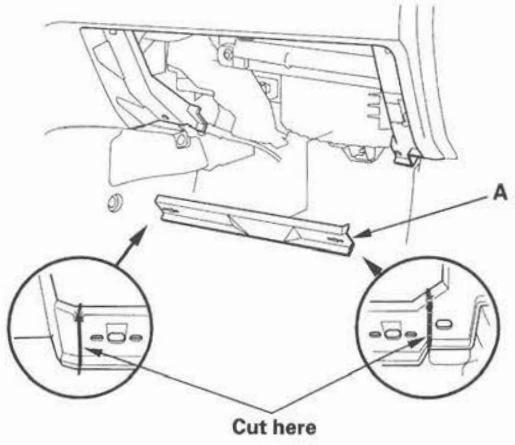

4. Remove the wire harness clips (A), the self-tapping screws, and the passenger's heater duct (B).

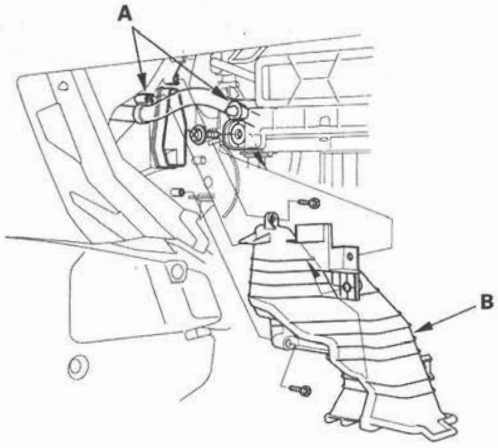

5. Disconnect the connector (A) from the blower motor. Remove the wire harness clip (B).

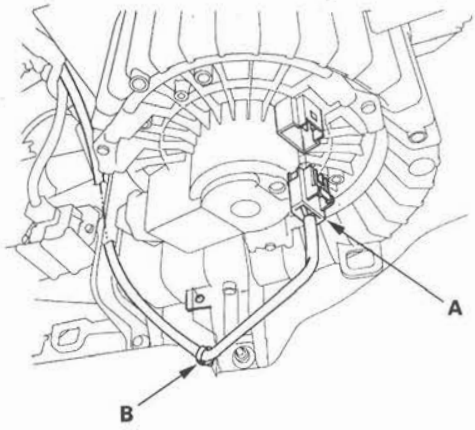

(cont'd)

Blower Unit Removal/Installation (cont'd)

6. Disconnect the connector (A) from the recirculation control motor. Remove the self-tapping screws, the bolt, the mounting nuts, and the blower unit (B).

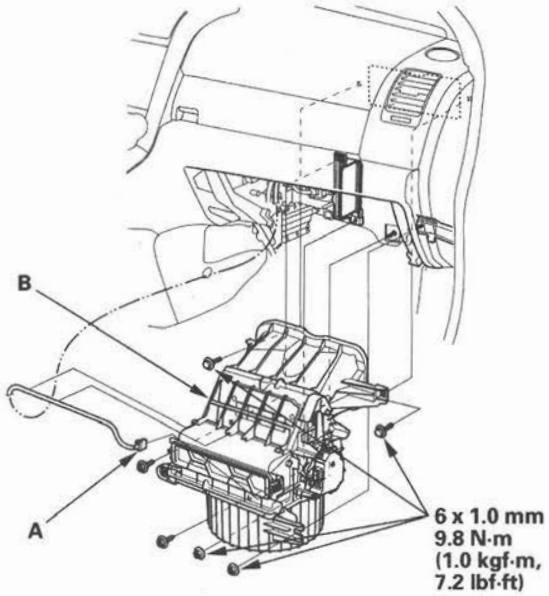

7. Install the unit in the reverse order of removal. Make sure that there is no air leakage.

Blower Unit Component Replacement

Note these items when overhauling the blower unit:

- The recirculation control motor (A), blower motor (B), and the dust and pollen filter (C) can be replaced without removing the blower unit.
- Before reassembly, make sure that the recirculation control linkage and door move smoothly without binding.
- After reassembly, make sure the recirculation control motor runs smoothly (see page 21-52).

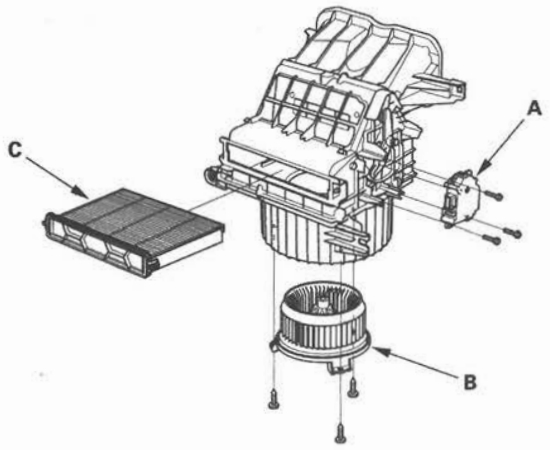

Evaporator Core Replacement

1. Recover the refrigerant with a recovery/recycling/charging station (see page 21-68).

2. Remove the bolt from the A/C line clamp, and remove the receiver line (A) from the clips (B).

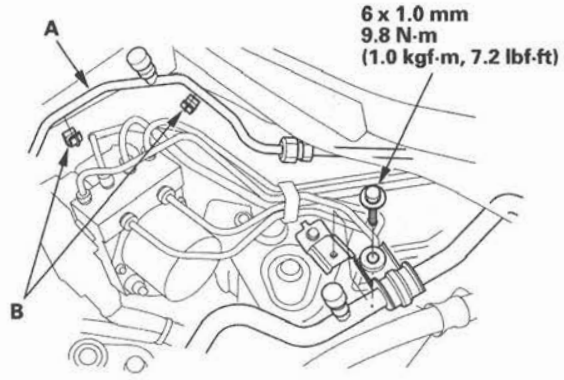

3. Remove the nut, then disconnect the A/C lines (A) from the evaporator core.

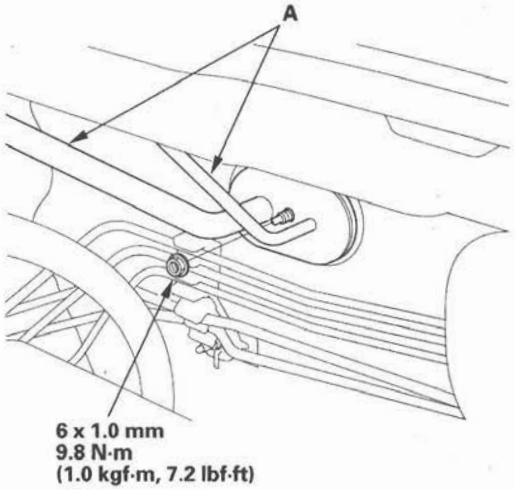

4. Remove the stud bolt.

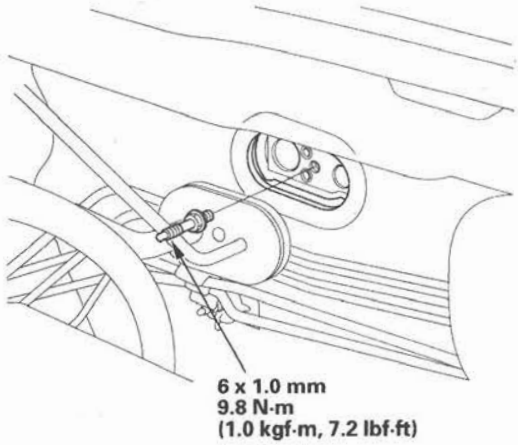

5. Remove the blower unit (see page 21-55).

6. Disconnect the connectors (A) from the evaporator temperature sensor and the power transistor, then remove the connector clip (B). Remove the self-tapping screws, the expansion valve cover (C), and the seal (D).

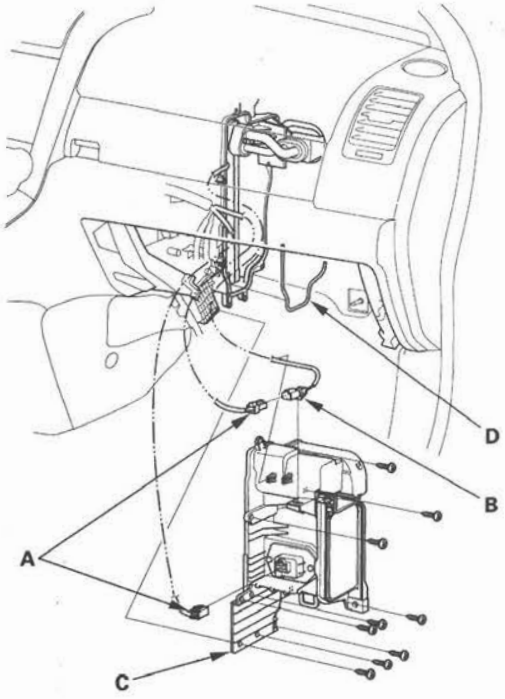

(cont'd)

Evaporator Core Replacement (cont'd)

7. Carefully pull out the evaporator core (A) without bending the lines, then remove the plate (B).

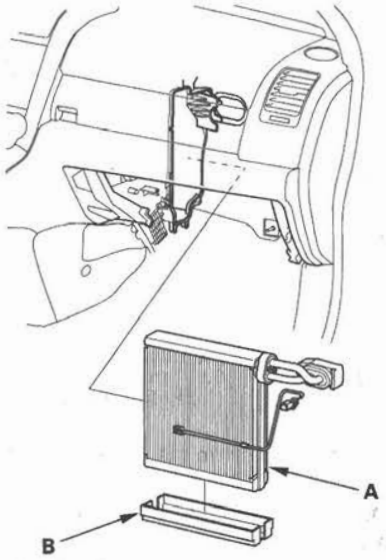

8. Remove the clips (A) and the evaporator temperature sensor (B).

   NOTE: At the factory, the evaporator temperature sensor is installed at the 11th fin from the left side.

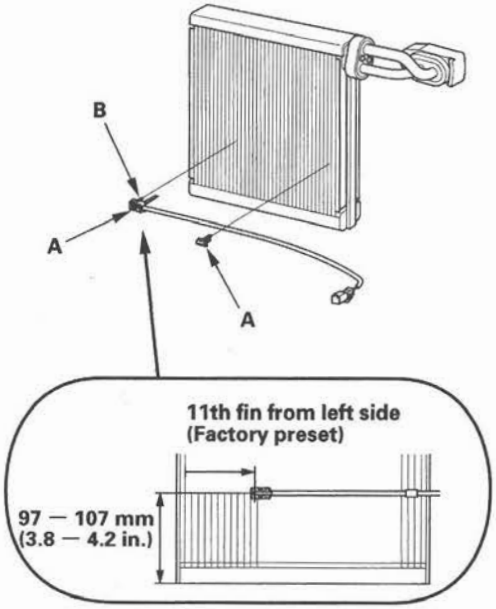

9. When the evaporator temperature sensor (A) is reinstalled, set the evaporator temperature sensor in the 12th fin from the left side.

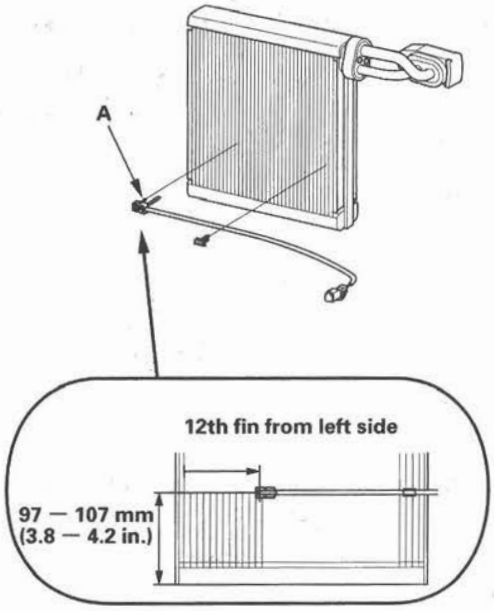

10. Install the core in the reverse order of removal and note these items:

    - If you're installing a new evaporator core, add refrigerant oil (SP-10) (see page 21-6).
    - Replace the O-rings with new ones at each fitting, and apply a thin coat of refrigerant oil before installing them. Be sure to use the correct O-rings for HFC-134a (R-134a) to avoid leakage.
    - Immediately after using the oil, reinstall the cap on the container, and seal it to avoid moisture absorption.
    - Do not spill the refrigerant oil on the vehicle; it may damage the paint; if the refrigerant oil contacts the paint, wash it off immediately.
    - Make sure that there is no air leakage.
    - Charge the system (see page 21-70).

Heater Unit/Core Replacement

SRS components are located in this area. Review the SRS component locations (see page 24-13), and the precautions and procedures (see page 24-15) before doing repairs or service.

1. Make sure you have anti-theft codes for the audio system and the navigation system (if equipped).
2. Make sure the ignition is OFF, then disconnect the negative cable from the battery.
3. Disconnect the A/C line from the evaporator core (see page 21-57).
4. When the engine is cool, drain the engine coolant from the radiator (see page 10-6).
5. From under the hood, slide the hose clamps (A) back. Disconnect the inlet heater hose (B) and the outlet heater hose (C) from the heater unit. Note the orientation of the hose.
   Engine coolant will run out when the hoses are disconnected; drain it into a clean drip pan. Be sure not to let coolant spill on the electrical parts or the painted surfaces. If any coolant spills, rinse it off immediately.

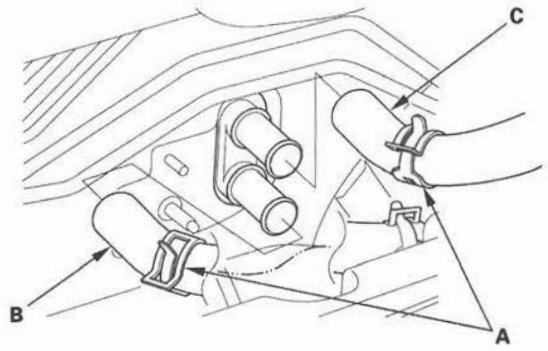

6. Remove the mounting nut from the heater unit. Take care not to damage or bend the fuel lines or brake lines, etc.

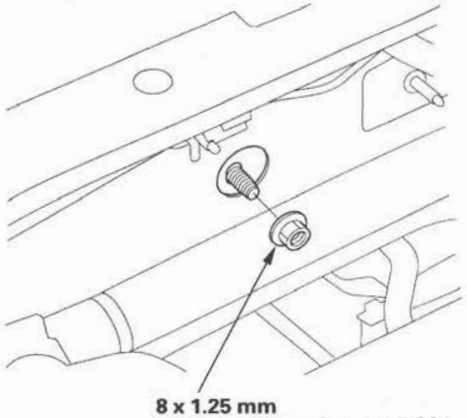

8 x 1.25 mm
12.3 N·m (1.3 kgf·m, 9.0 lbf·ft)

7. Remove the dashboard (see page 20-109).
8. Disconnect the connector (A) from the blower motor. Remove the wire harness clip (B).

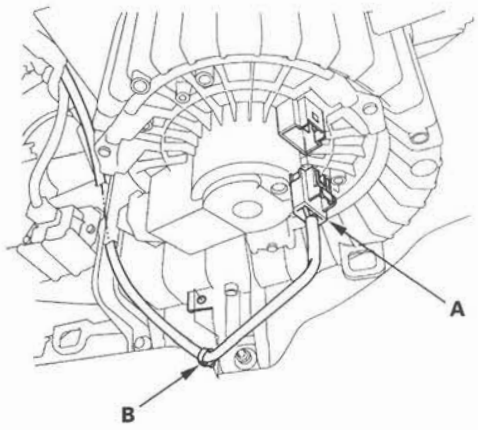

(cont'd)

Heater Unit/Core Replacement (cont'd)

9. Disconnect the connector (A) from the recirculation control motor.

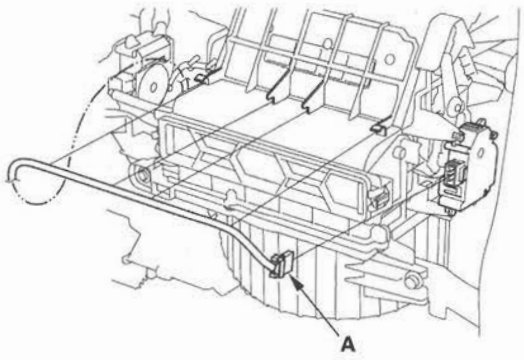

10. Disconnect the connectors (A) from the mode control motor, the evaporator temperature sensor, and the power transistor. Remove the wire harness clips (B).

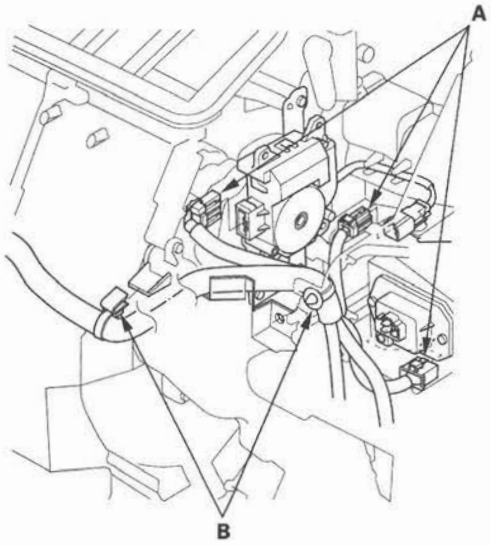

11. Disconnect the connectors (A) from the air mix control motor and A/C wire harness. Remove the connector clip (B), the wire harness clips (C), and the wire harness (D).

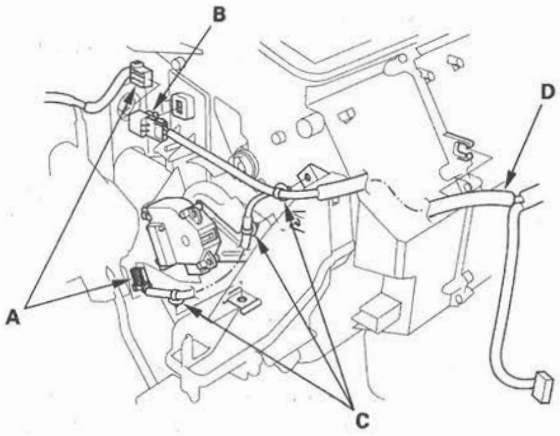

12. Remove the clip (A) and the duct (B). Side the clamp, then remove the drain hose (C). Remove the mounting bolt, mounting nuts, and blower-heater unit (D).

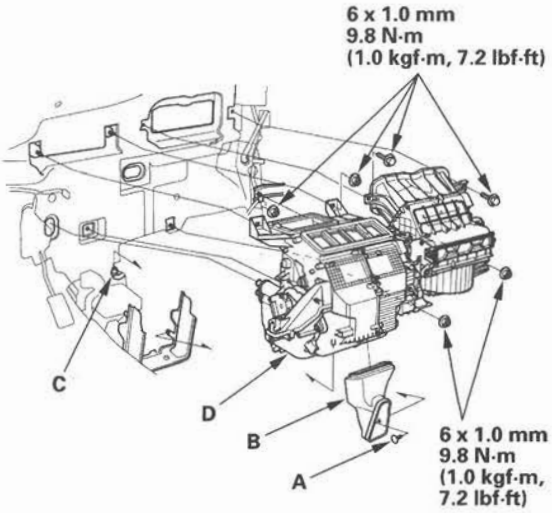

13. Remove the self-tapping screws and the driver's duct (A). Remove the self-tapping screws, the heater core cover (B), the grommet (C), and carefully pull out the heater core (D).

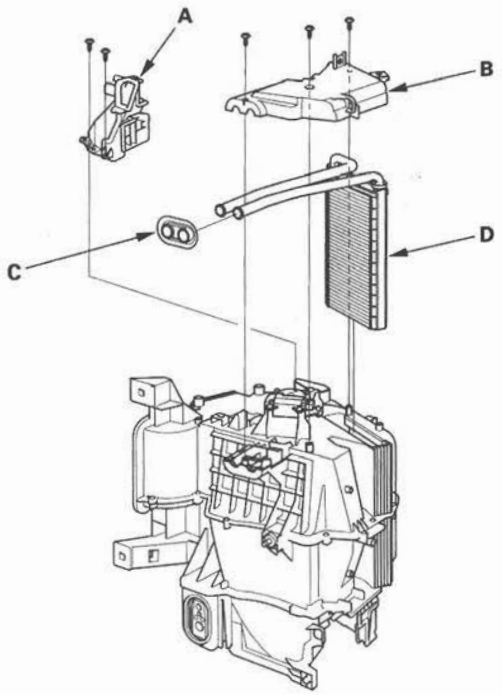

14. Install the heater core and the evaporator core in the reverse order of removal.

15. Install the heater unit in the reverse order of removal, and note these items:

    - Do not interchange the inlet and outlet heater hoses, and install the hose clamps securely.
    - Refill the cooling system with engine coolant (see page 10-6).
    - Make sure that there is no coolant leakage.
    - Make sure that there is no air leakage.
    - Refer to evaporator core replacement (see page 21-57).
    - Enter anti-theft codes for the audio system and navigation system (if equipped).
    - Set the clock (without Navigation system).

A/C Compressor Replacement

NOTE: Do not install an A/C compressor into a system unless you are completely sure that the system is free of contamination. Installing the A/C compressor into a contaminated system can result in premature A/C compressor failure.

1. If the A/C compressor is marginally operable, run the engine at idle speed, and let the air conditioning work for a few minutes, then shut the engine off.

2. Recover the refrigerant with a recovery/recycling/charging station (see page 21-68).

3. Remove the drive belt (see page 4-29).

4. Remove the front splash shield (see page 20-182).

(cont'd)

A/C Compressor Replacement (cont'd)

5. Disconnect the A/C compressor clutch connector (A). Remove the bolt and the nut, then disconnect the suction hose (B) and discharge hose (C) from the A/C compressor. Plug or cap the lines immediately after disconnecting them to avoid moisture and dust contamination.

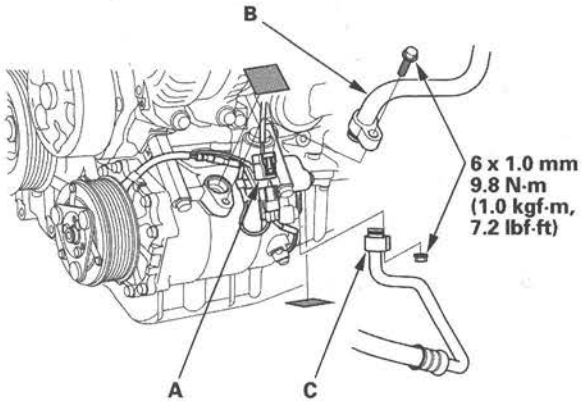

6. Remove the mounting bolts and the A/C compressor (A). Be careful not to damage the radiator fins when removing the A/C compressor.

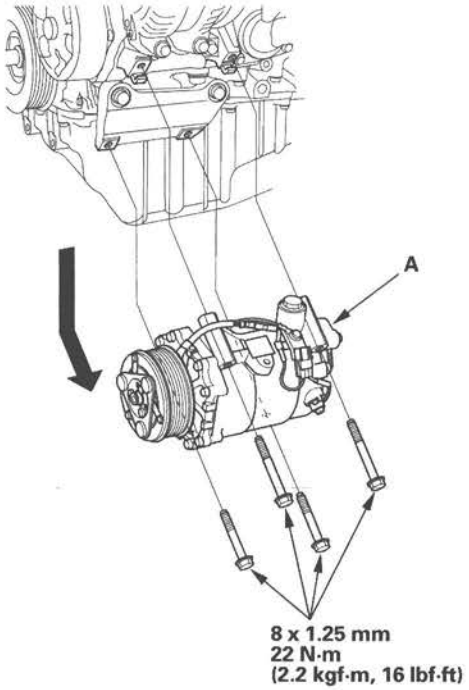

7. Install the compressor in the reverse order of removal, and note these items:

- Inspect the A/C lines for any signs of contamination.
- Replace the O-rings with new ones at each fitting, and apply a thin coat of refrigerant oil before installing them. Be sure to use the correct O-rings for HFC-134a (R-134a) to avoid leakage.
- Use refrigerant oil (SP-10) for HFC-134a SANDEN spiral type A/C compressor only.
- To avoid contamination, do not return the oil to the container once dispensed, and never mix it with other refrigerant oils.
- Immediately after using the oil, reinstall the cap on the container, and seal it to avoid moisture absorption.
- Do not spill the refrigerant oil on the vehicle; it may damage the paint; if the refrigerant oil contacts the paint, wash it off immediately.
- Charge the system (see page 21-70).

A/C Compressor Clutch Check

1. Check the armature plate for discoloration, peeling, or other damage. If there is damage, replace the clutch set (see page 21-64).

2. Check the rotor pulley bearing play and drag by rotating the rotor pulley by hand. Replace the clutch set with a new one if it is noisy or has excessive play/drag (see page 21-64).

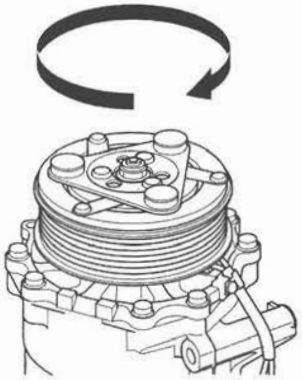

3. Measure the clearance between the rotor pulley (A) and the armature plate (B) all the way around. If the clearance is not within specified limits, remove the armature plate (see page 21-64) and add or remove shims as needed to increase or decrease clearance.

   Clearance: 0.35—0.65 mm (0.014—0.026 in.)

   NOTE: The shims are available in four thicknesses: 0.1 mm, 0.2 mm, 0.4 mm, and 0.5 mm.

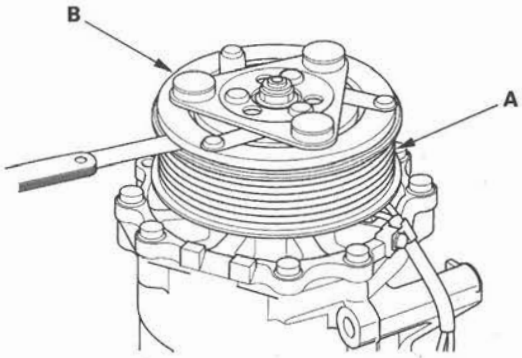

4. Check for continuity between the A/C compressor clutch connector No. 1 and No. 2. If there is no continuity, replace the thermal protector (see page 21-65).

   NOTE: The thermal protector will have no continuity above about 252 to 262 °F (122 to 128 °C). When the temperature drops below about 241 to 219 °F (116 to 104 °C), the thermal protector will have continuity.

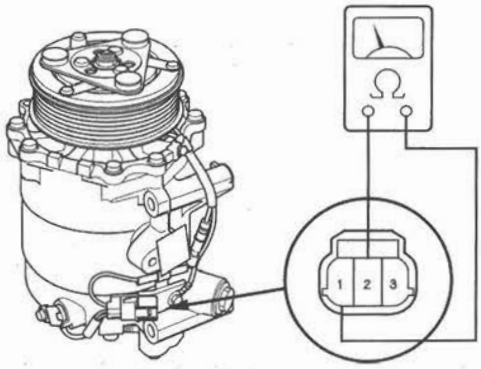

5. Disconnect the field coil connector (A). Check resistance of the field coil. If resistance is not within specifications, replace the field coil (see page 21-64).

   Field Coil Resistance: 3.15—3.45 Ω 68 °F (20 °C)

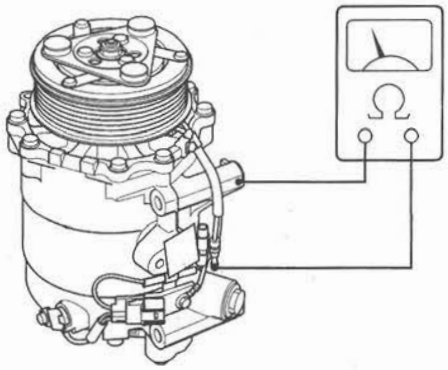

A/C Compressor Clutch Overhaul

Special Tools Required
A/C clutch holder, Robinair 10204 or Kent-Moore J37872, or Honda Tool and Equipment KMT-J33939, commercially available

1. Remove the center nut while holding the armature plate (A) with a commercially available A/C clutch holder (B).

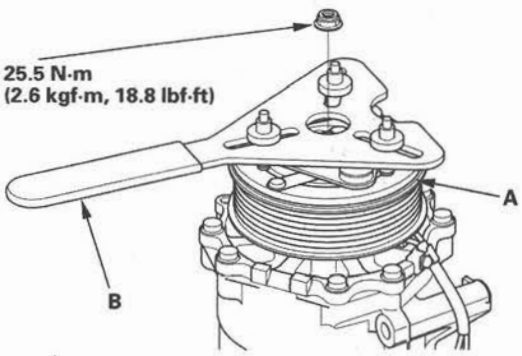

2. Remove the armature plate (A) and shim(s) (B), taking care not to lose the shim(s). If the clutch needs adjustment, increase or decrease the number and thickness of shims as necessary, then reinstall the armature plate, and recheck its clearance (see page 21-63).

   NOTE: The shims are available in four thicknesses: 0.1 mm, 0.2 mm, 0.4 mm, and 0.5 mm.

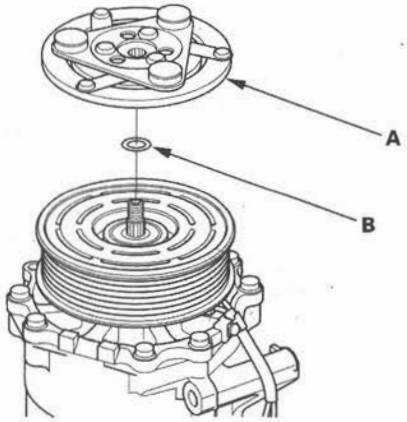

3. If you are replacing the field coil, remove the snap ring (A) with snap ring pliers, then remove the rotor pulley (B). Be careful not to damage the rotor pulley and A/C compressor.

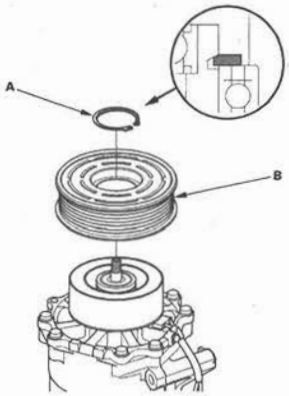

4. Remove the bolt and the field coil ground (A), then disconnect the field coil connector (B). Remove the snap ring (C) with snap ring pliers, then remove the field coil (D). Be careful not to damage the field coil and A/C compressor.

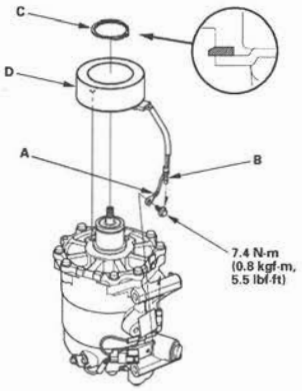

5. Reassemble the clutch in the reverse order of disassembly, and note these items:

   - Install the field coil with the wire side facing down, and align the boss on the field coil with the hole in the A/C compressor.
   - Clean the rotor pulley and A/C compressor sliding surfaces with contact cleaner or other non-petroleum solvent.
   - Install new snap rings, note the installation direction, and make sure they are fully seated in the groove.
   - Make sure that the rotor pulley turns smoothly after it's reassembled.
   - Route and clamp the wires properly or they can be damaged by the rotor pulley.

A/C Compressor Thermal Protector Replacement

1. Remove the bolt, the field coil ground (A), and the holder (B). Disconnect the field coil connector (C), then remove the connector clip (D). Remove the bolt, the holder (E), and thermal protector (F).

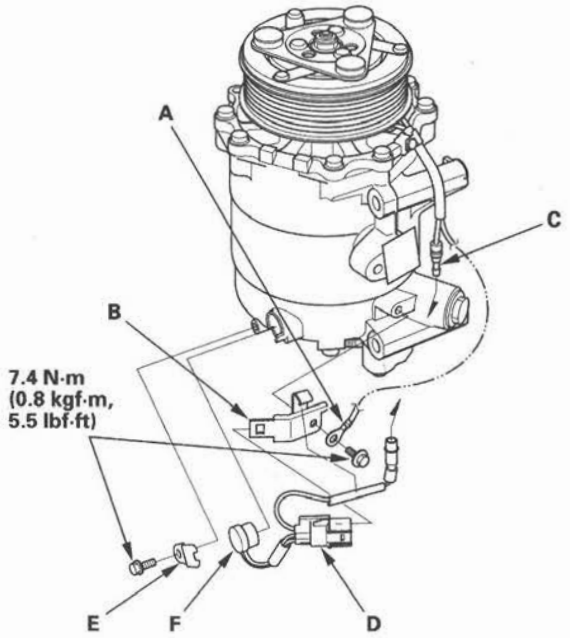

2. Replace the thermal protector (A) with a new one, and apply silicone sealant (B) to the bottom of the thermal protector.

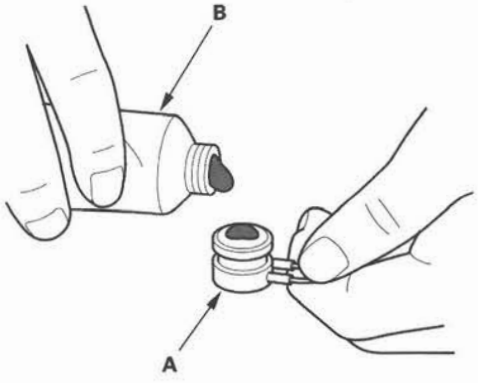

3. Install the thermal protector in the reverse order of removal.

A/C Compressor Relief Valve Replacement

1. Recover the refrigerant with a recovery/recycling/charging station (see page 21-68).

2. Remove the front splash shield (see page 20-182).

3. Remove the relief valve (A) and the O-ring (B). Plug the opening to keep foreign matter from entering the system and the A/C compressor oil from running out.

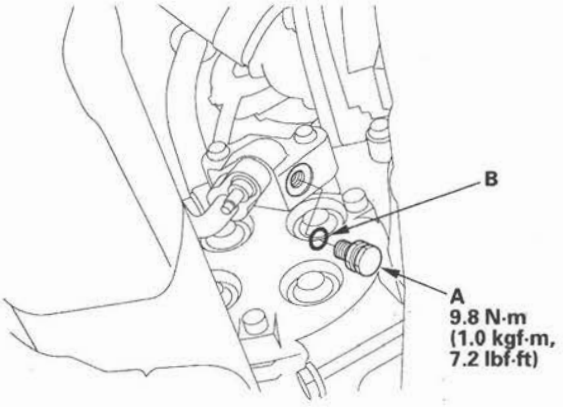

4. Clean the mating surfaces.

5. Replace the O-ring with a new one at the relief valve, and apply a thin coat of refrigerant oil before installing it.

6. Remove the plug, and install and tighten the relief valve.

7. Charge the system (see page 21-70).

A/C Condenser Replacement

1. Recover the refrigerant with a recovery/recycling/charging station (see page 21-68).
2. Remove the front bumper (see page 20-149).
3. Remove the bolts, then disconnect the discharge hose (A) from the A/C condenser.

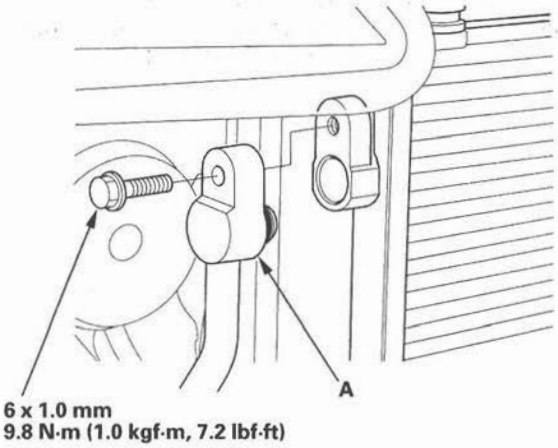

4. Remove the bolt, then disconnect the receiver line (A) from the A/C condenser.

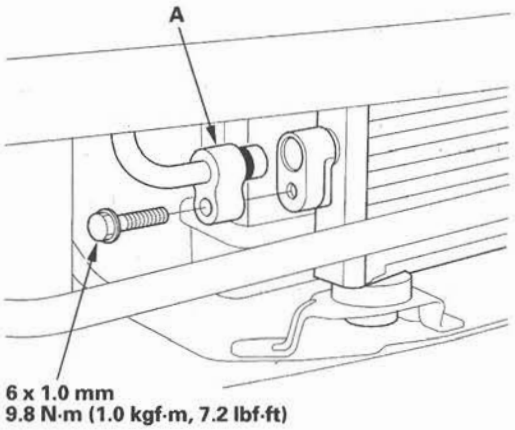

5. Remove the bolts, the harness clip (A), and the radiator upper mount brackets (B).

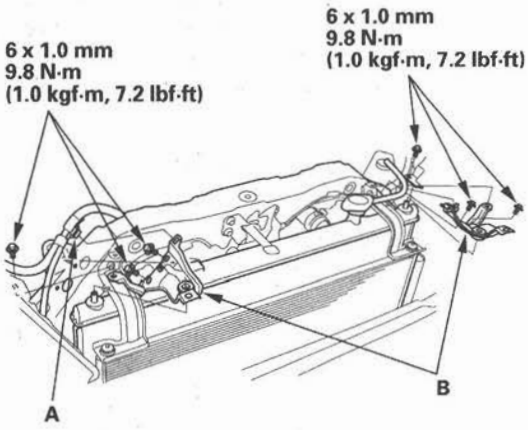

6. Remove the bolts and the A/C condenser upper mount brackets (A).

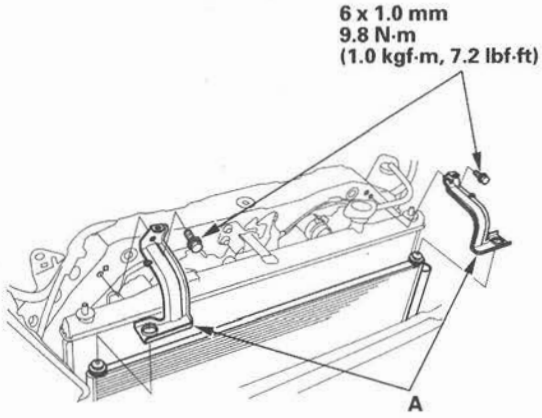

7. Remove the hood latch (see page 20-193).

8. Remove the A/C condenser (A) by lifting it up. Be careful not to damage the radiator and A/C condenser fins when removing the A/C condenser.

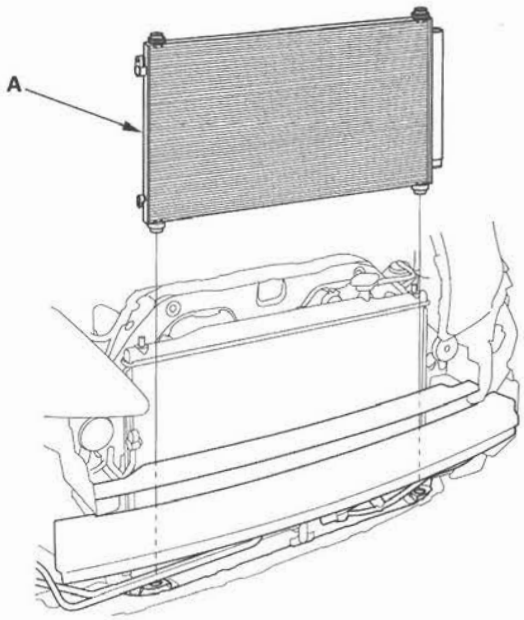

9. Install the A/C condenser in the reverse order of removal, and note these items:

   - If you're installing a new A/C condenser, add refrigerant oil (SP-10) (see page 21-6).
   - Replace the O-rings with new ones at each fitting, and apply a thin coat of refrigerant oil before installing them. Be sure to use the correct O-rings for HFC-134a (R-134a) to avoid leakage.
   - Immediately after using the oil, reinstall the cap on the container, and seal it to avoid moisture absorption.
   - Do not spill the refrigerant oil on the vehicle; it may damage the paint; if the refrigerant oil contacts the paint, wash it off immediately.
   - Charge the system (see page 21-70).
   - Adjust the hood latch (see page 20-155).

Receiver/Dryer Desiccant Replacement

NOTE: Install the receiver/dryer as quickly as possible to prevent the system from absorbing moisture from the air.

1. Remove the A/C condenser (see page 21-66).

2. Remove the cap (A) from the bottom of the A/C condenser. Remove the O-ring (B) and the desiccant (C).

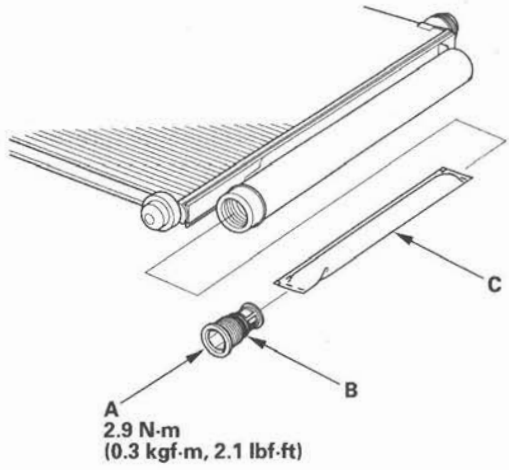

3. Install the receiver/dryer in the reverse order of removal, and note these items:

   - Replace the O-rings with new ones, and apply a thin coat of refrigerant oil (SP-10) before installing them. Be sure to use the correct O-rings for HFC-134a (R-134a) to avoid leakage.
   - Install the cap to the specified torque. It is made of resin and can be easily stripped.

Refrigerant Recovery

⚠CAUTION

- Air conditioning refrigerant or lubricant vapor can irritate your eyes, nose, or throat.
- Be careful when connecting service equipment.
- Do not breathe refrigerant or vapor.

NOTE:
- If accidental system discharge occurs, ventilate work area before resuming service.
- Additional health and safety information may be obtained from the refrigerant and lubricant manufacturers.

1. Connect an R-134a refrigerant recovery/recycling/charging station (A) to the high-pressure service port (B) and the low-pressure service port (C), as shown, following the equipment manufacturer's instructions.

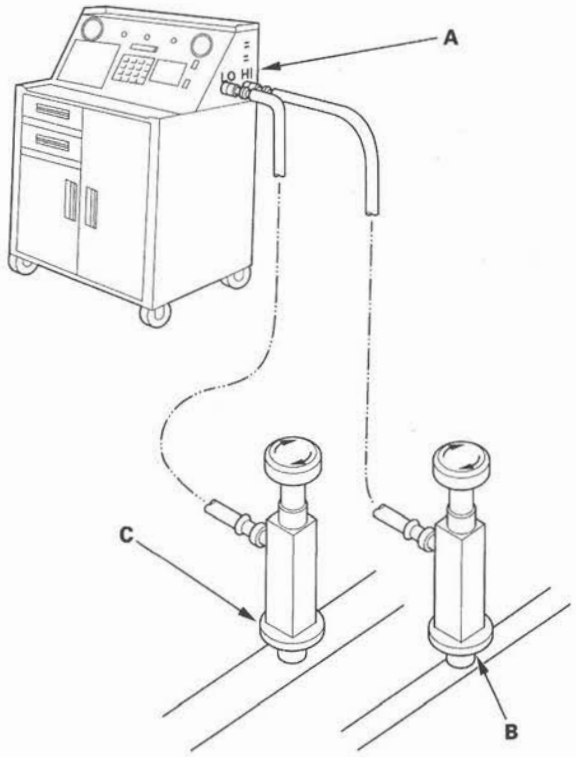

2. Measure the amount of refrigerant oil removed from the A/C system after the recovery process is completed. Be sure to put the same amount of new refrigerant oil back into the A/C system before charging.

System Evacuation

⚠CAUTION

- Air conditioning refrigerant or lubricant vapor can irritate your eyes, nose, or throat.
- Be careful when connecting service equipment.
- Do not breathe refrigerant or vapor.

NOTE:
- If accidental system discharge occurs, ventilate work area before resuming service.
- Additional health and safety information may be obtained from the refrigerant and lubricant manufacturers.

1. When an A/C System has been opened to the atmosphere, such as during installation or repair, it must be evacuated using an R-134a refrigerant recovery/recycling/charging station. If the system has been open for several days, the receiver/dryer should be replaced, and the system should be evacuated for several hours.

2. Connect an R-134a refrigerant recovery/recycling/charging station (A) to the high-pressure service port (B) and the low-pressure service port (C), as shown, following the equipment manufacturer's instructions. Evacuate the system.

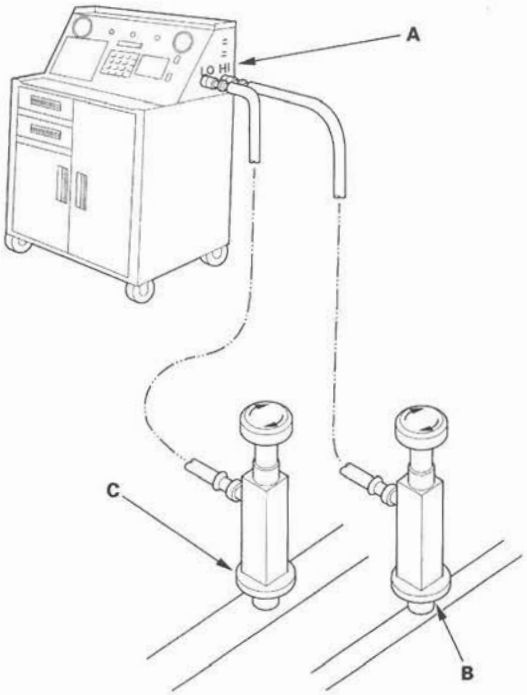

3. If the low-pressure does not reach more than 93.3 kPa (700 mmHg, 27.6 in.Hg) in 15 minutes, there is probably a leak in the system. Partially charge the system, and check for leaks (see step 3 on page 21-71).

System Charging

⚠CAUTION

- Air conditioning refrigerant or lubricant vapor can irritate your eyes, nose, or throat.
- Be careful when connecting service equipment.
- Do not breathe refrigerant or vapor.

NOTE:
- If accidental system discharge occurs, ventilate work area before resuming service.
- Additional health and safety information may be obtained from the refrigerant and lubricant manufacturers.

1. Connect an R-134a refrigerant recovery/recycling/charging station (A) to the high-pressure service port (B) and the low-pressure service port (C), as shown, following the equipment manufacturer's instructions.

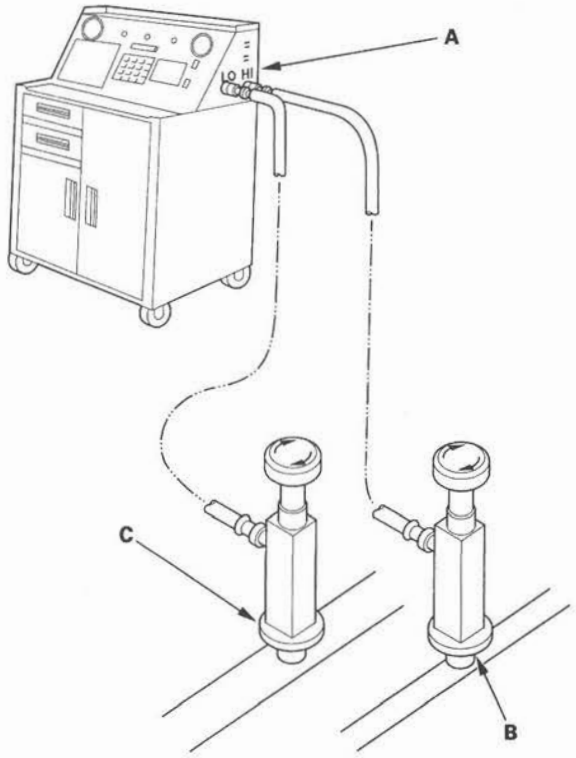

2. Evacuate the system (see page 21-69).
3. Add the same amount of new refrigerant oil to the system that was removed during recovery. Use only SP-10 refrigerant oil.
4. Charge the system with the specified amount of R-134a refrigerant. Do not overcharge the system; the A/C compressor will be damaged.

   Select the appropriate units of measure for your refrigerant charging station.

   Refrigerant Capacity:
   440 to 490 g
   0.44 to 0.49 kg
   0.97 to 1.08 lbs
   15.5 to 17.3 oz
5. Check for refrigerant leaks (see page 21-71).
6. Check the system performance (see page 21-72).

Refrigerant Leak Test

Special Tools Required
Leak detector, Honda Tool and Equipment YGK-H-10PM or commercially available

⚠CAUTION

- Air conditioning refrigerant or lubricant vapor can irritate your eyes, nose, or throat.
- Be careful when connecting service equipment.
- Do not breathe refrigerant or vapor.

NOTE:
- If accidental system discharge occurs, ventilate work area before resuming service.
- Additional health and safety information may be obtained from the refrigerant and lubricant manufacturers.

1. Connect an R-134a refrigerant recovery/recycling/charging station (A) to the high-pressure service port (B) and the low-pressure service port (C), as shown, following the equipment manufacturer's instructions.

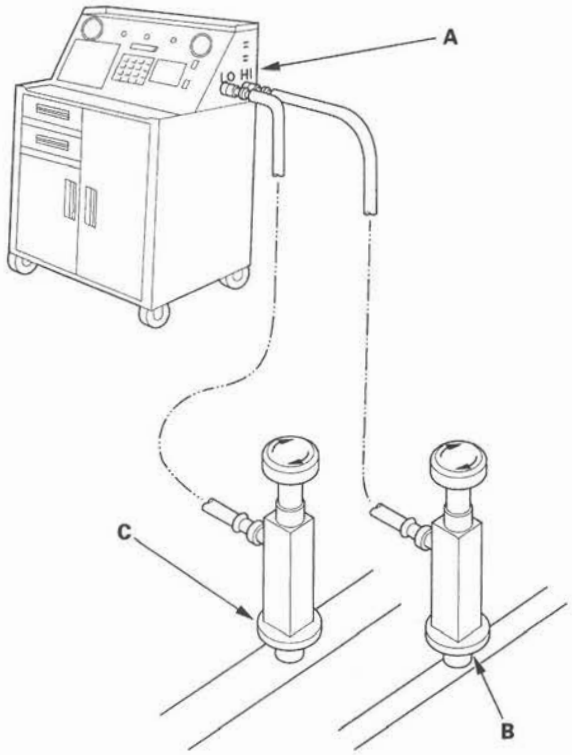

2. Open the high pressure valve to charge the system to the specified capacity, then close the supply valve, and disconnect the charging station fittings.

   Select the appropriate units of measurement for your refrigerant charging station.

   Refrigerant Capacity:
   440 to 490 g
   0.44 to 0.49 kg
   0.97 to 1.08 lbs
   15.5 to 17.3 oz

3. Check the system for leaks using an R-134a refrigerant leak detector with an accuracy of 14 g (0.5 oz) per year or better.

4. If you find leaks that require the system to be opened (to repair or replace hoses, fittings, etc.), do a recovery of the system.

5. After checking and repairing leaks, the system must be evacuated.

A/C System Test

Performance Test

⚠CAUTION

- Air conditioning refrigerant or lubricant vapor can irritate your eyes, nose, or throat.
- Be careful when connecting service equipment.
- Do not breathe refrigerant or vapor.

The performance test will help determine if the A/C system is operating within specifications.

NOTE:
- If accidental system discharge occurs, ventilate work area before resuming service.
- Additional health and safety information may be obtained from the refrigerant and lubricant manufacturers.

1. Connect an R-134a refrigerant recovery/recycling/charging station to the high-pressure service port and the low-pressure service port, following the equipment manufacturer's instructions.

2. Determine the relative humidity and air temperature.

3. Open the glove box. Remove the glove box stop on right side, then let the glove box hang down (see page 20-105).

4. Insert a thermometer (A) in the center vent.

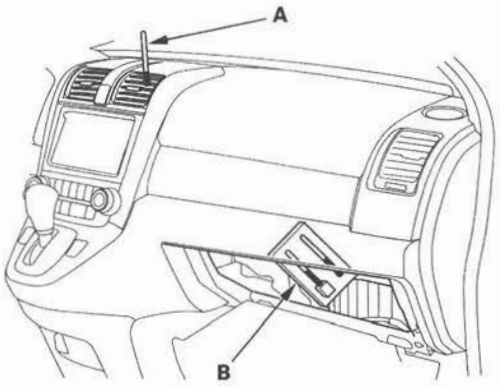

5. Place a thermometer (B) near the blower unit's recirculation inlet duct.

6. Test conditions:
   - Avoid direct sunlight.
   - Open hood.
   - Open front doors.
   - Set the temperature control dial to Max Cool, the mode control switch to Vent, and the recirculation control switch to Recirculate.
   - Turn the A/C switch ON and the fan switch to Max.
   - Run the engine at 1,500 rpm.
   - No driver or passengers in vehicle.

7. After running the air conditioning for 10 minutes under the above test conditions, read the delivery temperature from the thermometer in the center vent, the intake temperature near the blower unit, and the discharge (high) and suction (low) pressures on the A/C gauges.

8. Refer to the inspection data.

Inspection data

Example	Intake temperature (dry):	86 ℉ (30 ℃) Humidity level 70 %
	Intake temperature (wet):	77.9 ℉ (25.5 ℃)
	Delivery temperature:	60.1 ℉ (15.6 ℃)
	Delivery pressure:	2,061 kPa (21.0 kgf/cm²) (299 psi)
	Intake pressure:	239 kPa (2.4 kgf/cm²) (35 psi)
Results:	Within normal range	

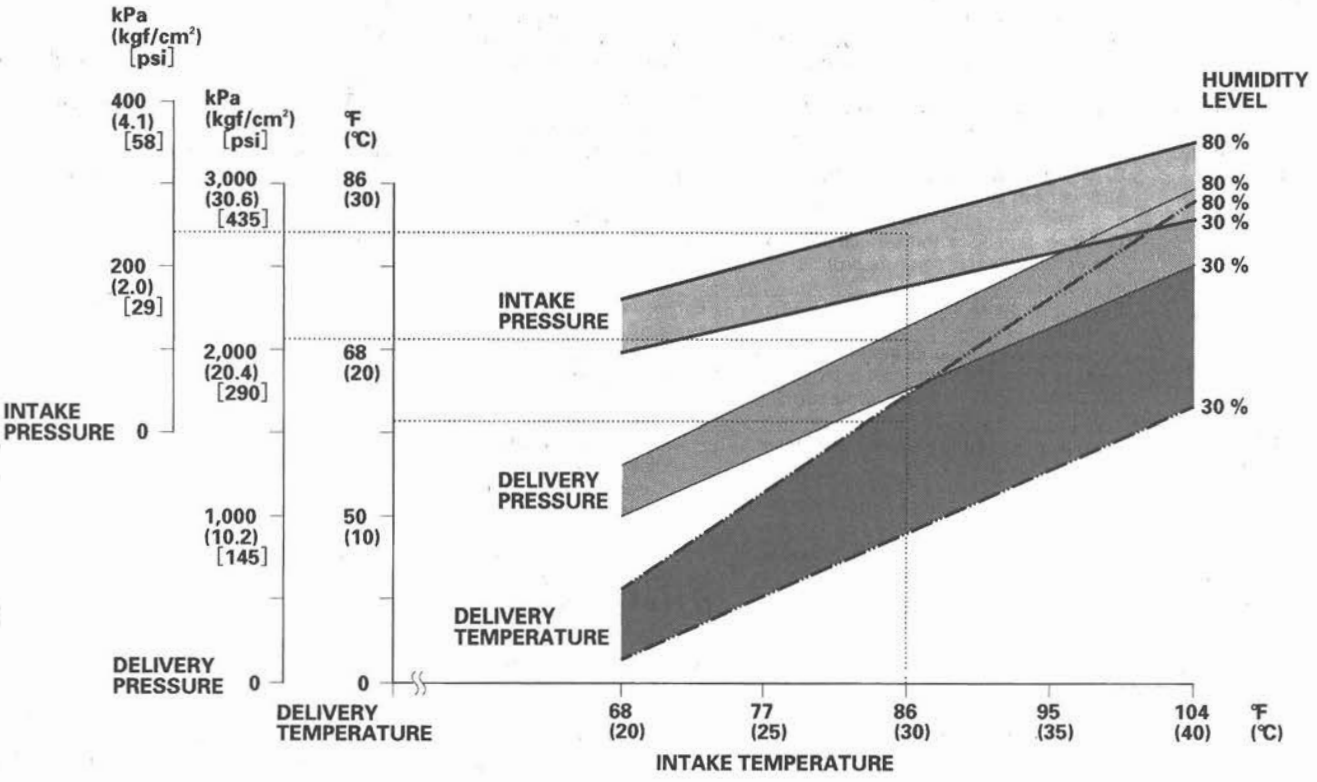

(cont'd)

A/C System Test (cont'd)

Pressure Test

Test results	Related symptoms	Probable cause	Remedy
Discharge (high) pressure abnormally high	After stopping A/C compressor, pressure drops about 196 kPa (2.0 kgf/cm², 28 psi) quickly, and then falls gradually.	Air in system	Recover, evacuate (see page 21-68), and recharge with specified amount (see page 21-70).
	Reduced or no airflow through A/C condenser.	• Clogged condenser or radiator fins • A/C condenser or radiator fan not working properly	• Clean. • Check voltage and fan rpm. • Check fan direction.
	Line to A/C condenser is excessively hot.	Restricted flow of refrigerant in system	Restricted lines.
Discharge pressure abnormally low	High and low-pressures are balanced soon after stopping A/C compressor. Low side is higher than normal.	• Faulty A/C compressor discharge valve • Faulty A/C compressor seal	Replace the A/C compressor.
	Outlet of expansion valve is not frosted, low-pressure gauge indicates vacuum.	• Faulty expansion valve • Moisture in system	• Replace. • Recover, evacuate, and recharge with specified amount.
Suction (low) pressure abnormally low	Expansion valve is not frosted, and low-pressure line is not cold. Low-pressure gauge indicates vacuum.	• Frozen expansion valve (Moisture in system) • Faulty expansion valve	• Recover, evacuate, and recharge with specified amount. • Replace the expansion valve.
	Discharge temperature is low, and the airflow from vents is restricted.	Frozen evaporator	Run the fan with A/C compressor off, then check evaporator temperature sensor.
	Expansion valve is frosted.	Clogged expansion valve	Clean or replace.
Suction pressure abnormally high	Low-pressure hose and service port are cooler than the temperature around evaporator.	Expansion valve open too long	Repair or replace.
	Suction pressure is lowered when A/C condenser is cooled by water.	Excessive refrigerant in system	Recover, evacuate, and recharge with specified amount.
	High and low-pressures are equalized as soon as the A/C compressor is stopped, and both gauges fluctuate while running.	• Faulty gasket • Faulty high-pressure valve • Foreign particle stuck in high-pressure valve	Replace the A/C compressor.
Suction and discharge pressures abnormally high	Reduced airflow through A/C condenser.	• Clogged A/C condenser or radiator fins • A/C condenser or radiator fan not working properly	• Clean. • Check voltage and fan rpm. • Check fan direction.
Suction and discharge pressures abnormally low	Low-pressure hose and metal fittings are cooler than evaporator.	Clogged or kinked low-pressure hose parts	Repair or replace.
	Temperature around expansion valve is too low compared with that around receiver/dryer.	Clogged high-pressure line	Repair or replace.
Refrigerant leaks	A/C compressor clutch is dirty.	A/C compressor shaft seal leaking	Replace the A/C compressor.
	A/C compressor bolt(s) are dirty.	Leaking around bolt(s)	Tighten bolt(s) or replace A/C compressor.
	A/C compressor gasket is wet with oil.	Gasket leaking	Replace the A/C compressor.
	A/C fitting is dirty.	Leaking O-ring	Clean the A/C fitting and replace the O-ring.

SUPPLEMENTAL RESTRAINT SYSTEM (SRS) (If electrical maintenance is required)

The CR-V SRS includes a driver's airbag in the steering wheel hub, a passenger's airbag in the dashboard above the glove box, seat belt tensioners in the front seat belt retractors, seat belt buckle tensioners in the front seat belt buckles, side curtain airbags in the sides of the roof, and side airbags in the front seat-backs. Information necessary to safely service the SRS is included in this Service Manual. Items marked with an asterisk (*) on the contents page include or are located near SRS components. Servicing, disassembling, or replacing these items require special precautions and tools, and should be done only by an authorized Honda dealer.

- To avoid rendering the SRS inoperative, which could lead to personal injury or death in the event of a severe frontal or side collision, all SRS service work should be done by an authorized Honda dealer.
- Improper service procedures, including incorrect removal and installation of the SRS, could lead to personal injury caused by unintentional deployment of the airbags and/or side airbags.
- Do not bump or impact the SRS unit, front impact sensors, or side impact sensors when the ignition switch is ON (II), or for at least 3 minutes after the ignition switch is turned OFF; otherwise, the system may fail in a collision, or the airbags may deploy.
- SRS electrical connectors are identified by yellow color coding. Related components are located in the steering column, front console, dashboard, dashboard lower panel, in the dashboard above the glove box, in the front seats, in the roof side, and around the floor. Do not use electrical test equipment on these circuits.

Body Electrical

Body Electrical
Special Tools 22-2
General Troubleshooting Information 22-3

Relay and Control Unit Locations 22-7

Connectors and Harnesses 22-13

Fuse/Relay Boxes 22-56

Power Distribution 22-58

Ground Distribution 22-62

Under-hood Fuse/Relay Box
Removal and Installation 22-63

Under-dash Fuse/Relay Box
Removal and Installation 22-64

Battery
Test 22-65

Relays
Test 22-66

Ignition Switch
Test 22-68
Replacement 22-68

Multiplex Integrated Control System
Component Location Index 22-69
General Troubleshooting Information 22-70
DTC Troubleshooting Index 22-73
System Description 22-75
Troubleshooting - B-CAN System Diagnosis Test Mode A 22-92
Troubleshooting - B-CAN System Diagnosis Test Mode B 22-93
Troubleshooting - B-CAN System Diagnosis Test Mode C 22-94
Troubleshooting - B-CAN System Diagnosis Test Mode D 22-95
Troubleshooting - B-CAN System Diagnosis Test Mode 1 and Test Mode 2 22-96
Sleep and Wake-up Mode Test 22-98
Circuit Diagram 22-99
DTC Troubleshooting 22-100
MICU Input Test 22-106

Keyless/Power Door Locks/Security System
Component Location Index 22-108
System Description 22-110
Circuit Diagram 22-112
DTC Troubleshooting 22-116
Symptom Troubleshooting 22-123
MICU Input Test 22-126
Door Lock Actuator Test 22-131
Door Lock Knob Switch Test 22-132
Door Lock Switch Test 22-133
Door Key Cylinder Switch Test 22-134
Hood Switch Test 22-134
Tailgate Release Actuator Test 22-135
Tailgate Outer Handle Switch Test/Replacement 22-135
Transmitter Test 22-136

Horns
Component Location Index 22-139
Circuit Diagram 22-140
Horn Switch Test 22-141
Horn Test/Replacement 22-142

Exterior Lights
Component Location Index 22-143
System Description 22-145
Circuit Diagram 22-146
DTC Troubleshooting 22-150
MICU Input Test 22-157
Combination Light Switch Test/Replacement 22-161
Headlight Adjustment 22-162
Headlight Replacement 22-163
Bulb Replacement 22-163
Taillight Replacement 22-165
License Plate Light Replacement 22-165
High Mount Brake Light Replacement 22-166
Brake Pedal Position Switch Test 22-166

Turn Signal/Hazard Flasher
Component Location Index 22-167
Circuit Diagram 22-168
MICU Input Test 22-170
Hazard Warning Switch Test/Replacement 22-174

Interior Lights

Component Location Index 22-175
Circuit Diagram 22-176
Front Individual Map Light Test/Replacement 22-177
Ceiling Light Test/Replacement 22-178
Cargo Area Light Test/Replacement 22-178
Tailgate Latch Switch Test 22-179
Interior Light Switch Test/Replacement 22-180
Ambient Light Test/Replacement 22-180

Entry Lights Control System

Component Location Index 22-181
Circuit Diagram 22-182
MICU Input Test 22-183
Ignition Key Switch Test 22-186
Ignition Key Light Test 22-186

Power Windows

Component Location Index 22-187
System Description 22-188
Resetting the Power Window Control Unit 22-189
Circuit Diagram 22-190
Master Switch Input Test 22-192
Driver's Power Window Motor Test 22-195
Passenger's Power Window Motor Test 22-196
Master Switch Test 22-197
Passenger's Power Window Switch Test 22-198
Power Window Switch Replacement 22-199

Wipers/Washers

Component Location Index 22-200
Circuit Diagram 22-203
DTC Troubleshooting 22-205
MICU Input Test 22-213
Wiper/Washer Switch Test/Replacement 22-216
Wiper Motor Test 22-217
Washer Motor Test 22-218
Washer Fluid Level Switch Test 22-218
Wiper Motor Replacement 22-219
Washer Reservoir Replacement 22-221
Wiper Blade Replacement 22-222
Wiper Arm/Nozzle Adjustment 22-223
Washer Tube Replacement 22-224

Gauges

Component Location Index 22-227
Self-diagnostic Function 22-229
Circuit Diagram 22-232
DTC Troubleshooting 22-236
Gauge Control Module Input Test 22-245
Rewriting the ODO Data and Transferring Smart Maintenance on a New Gauge Control Module 22-247
Gauge Control Module Replacement 22-248
Outside Air Temperature Indicator Calibration 22-249
Outside Air Temperature Sensor Test 22-250
Outside Air Temperature Sensor Replacement 22-250

Reminder Systems

Component Location Index 22-251
Circuit Diagram 22-252
Control Unit Input Test 22-254

Moonroof

Component Location Index 22-257
Resetting the Moonroof Control Unit 22-258
Circuit Diagram 22-259
Control Unit Input Test 22-260
Moonroof Switch Test/Replacement 22-262

Accessory Power Sockets

Component Location Index 22-263
Circuit Diagram 22-264
Front Accessory Power Socket Test/Replacement 22-265
Console Accessory Power Socket Test/Replacement 22-266
Cargo Area Accessory Power Socket Test/Replacement 22-268

Power Mirrors

Component Location Index 22-269
Circuit Diagram 22-270
Function Test 22-272
Power Mirror Switch Test/Replacement 22-273
Power Mirror Actuator Test 22-274
Power Mirror Actuator Replacement 22-274

Seat Heaters

Component Location Index 22-276
Circuit Diagram 22-278
Seat Heater Test 22-280
Switch Test/Replacement 22-281

Rear Window Defogger

Component Location Index 22-282
Circuit Diagram 22-283
Function Test 22-284
Defogger Wire Repair 22-285

Immobilizer System

Component Location Index 22-286
System Description 22-287
Circuit Diagram 22-288
DTC Troubleshooting 22-289
Symptom Troubleshooting Information 22-292
Symptom Troubleshooting 22-294
System Check 22-298
Immobilizer-Keyless Control Unit Input Test 22-300
Immobilizer Key Registration 22-302
Immobilizer-Keyless Control Unit Replacement 22-303



Special Tools

Ref. No.	Tool Number	Description	Qty
①	07WAZ-001010A	MPCS (MCIC) Service Connector	1
②	07TAZ-001020A	Back Probe Adaptor	1

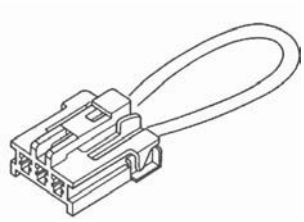

①

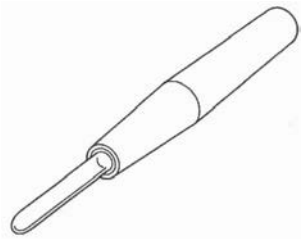

②

General Troubleshooting Information

Tips and Precautions

Before Troubleshooting

1. Check applicable fuses in the appropriate fuse/relay box.

2. Check the battery for damage, state of charge, and clean and tight connections.

NOTICE

- Do not quick-charge a battery unless the battery ground cable has been disconnected, otherwise you will damage the alternator diodes.
- Do not attempt to crank the engine with the battery ground cable loosely connected or you will severely damage the wiring.

Handling Connectors

- Make sure the connectors are clean and have no loose wire terminals.
- Make sure multiple cavity connectors are packed with dielectric grease (except watertight connectors).
- All connectors have push-down release type locks (A).

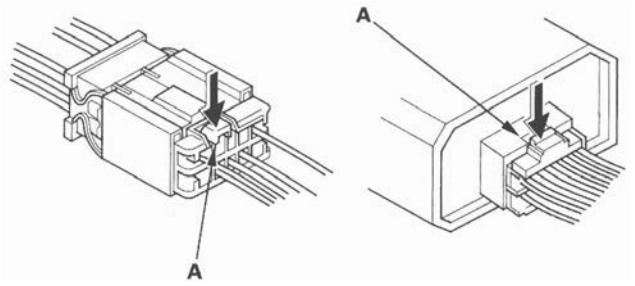

- Some connectors have a clip on their side used to attach them to a mount bracket on the body or on another component. This clip has a pull type lock.
- Some mounted connectors cannot be disconnected unless you first release the lock and remove the connector from its mount bracket (A).

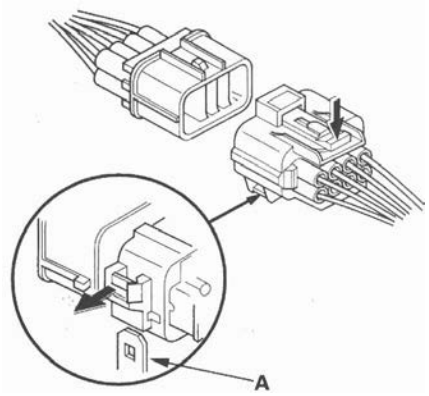

- Never try to disconnect connectors by pulling on their wires; pull on the connector halves instead.
- Always reinstall plastic covers.



- Before connecting connectors, make sure the terminals (A) are in place and not bent.

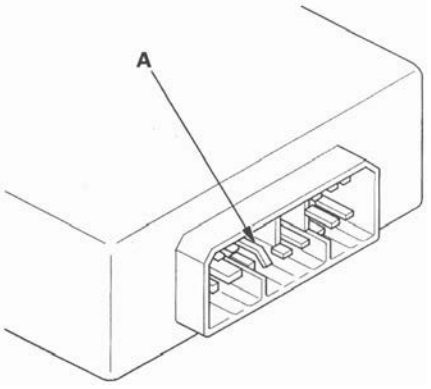

(cont'd)

General Troubleshooting Information (cont'd)

- Check for loose retainer (A) and rubber seals (B).

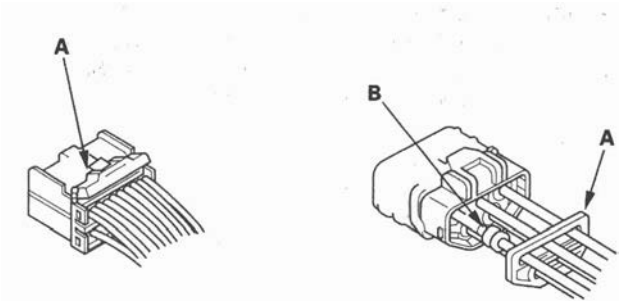

- The backs of some connectors are packed with dielectric grease. Add grease if necessary. If the grease is contaminated, replace it.

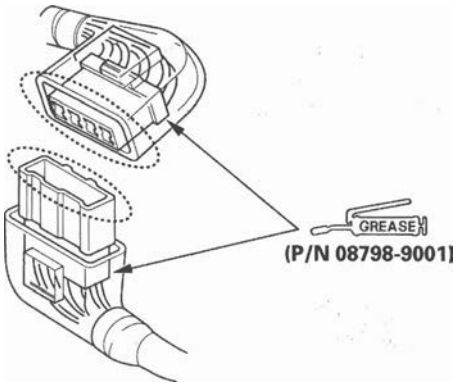

- Insert the connector all the way and make sure it is securely locked.
- Position wires so that the open end of the cover faces down.

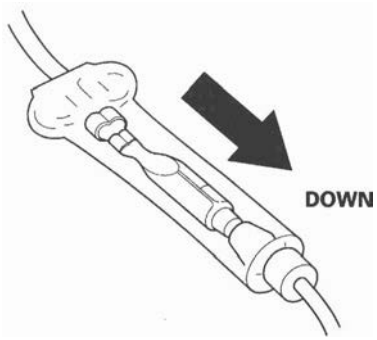

Handling Wires and Harnesses

- Secure wires and wire harnesses to the frame with their respective wire ties at the designated locations.
- Remove clips carefully; don't damage their locks (A).

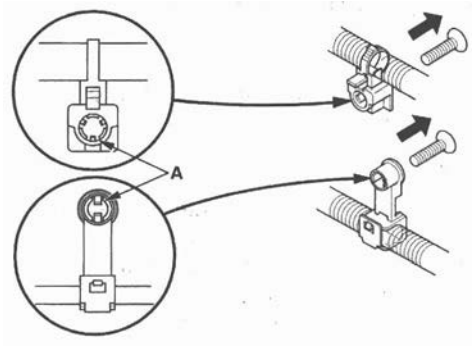

- Slip pliers (A) under the clip base and through the hole at an angle, then squeeze the expansion tabs to release the clip.

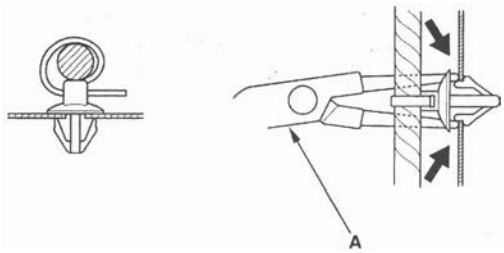

- After installing harness clips, make sure the harness doesn't interfere with any moving parts.
- Keep wire harnesses away from exhaust components and other hot parts, from sharp edges of brackets and holes, and from exposed screws and bolts.
- Seat grommets in their grooves properly (A). Do not leave grommets distorted (B).

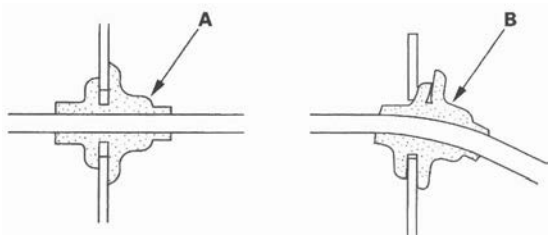

Testing and Repairs

- Do not use wires or harnesses with broken insulation. Replace them or repair them by wrapping the break with electrical tape.
- Never attempt to modify, splice, or repair SRS wiring. If there is an open or damage is SRS wiring or terminals, replace the harness.
- After installing parts, make sure that no wires are pinched under them.
- When using electrical test equipment, follow the manufacturer's instructions and those described in this manual.
- If possible, insert the probe of the tester from the wire side (except waterproof connector).

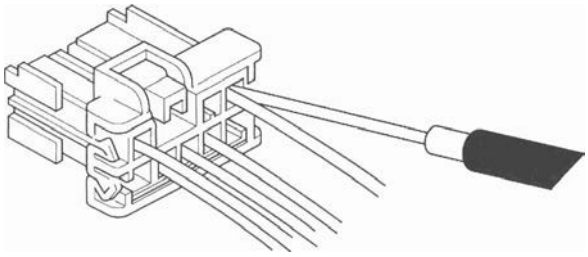

- Use back probe adaptor 07TAZ-001020A.

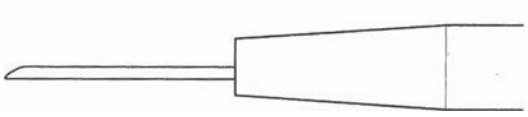

- Refer to the instructions in the Honda Terminal Kit for identification and replacement of connector terminals.

Five-step Troubleshooting

1. Verify The Complaint:
   Turn on all the components in the problem circuit to verify the customer complaint. Note the symptoms. Do not begin disassembly or testing until you have narrowed down the problem area.

2. Analyze The Schematic:
   Look up the schematic for the problem circuit. Determine how the circuit is supposed to work by tracing the current paths from the power feed through the circuit components to ground. If several circuits fail at the same time, the fuse or a ground is a likely cause.

   Based on the symptoms and your understanding of the circuit operation, identify one or more possible causes of the problem.

3. Isolate The Problem By Testing The Circuit:
   Make circuit tests to check the diagnosis you made in step 2. Keep in mind that a logical, simple procedure is the key to efficient troubleshooting. Test for the most likely cause of failure first. Try to make tests at points that are easily accessible.

4. Fix The Problem:
   Once the specific problem is identified, make the repair. Be sure to use proper tools and safe procedures.

5. Make Sure The Circuit Works:
   Turn on all components in the repaired circuit in all modes to make sure you've fixed the entire problem. If the problem was a blown fuse, be sure to test all of the circuits on the fuse. Make sure no new problems turn up and the original problem does not recur.

(cont'd)

General Troubleshooting Information (cont'd)

Wire Color Codes

The following abbreviations are used to identify wire colors in the circuit schematics:

WHT	White
YEL	Yellow
BLK	Black
BLU	Blue
GRN	Green
RED	Red
ORN	Orange
PNK	Pink
BRN	Brown
GRY	Gray
PUR	Purple
LT BLU	Light Blue
LT GRN	Light Green

The wire insulation has one color or one color with another color stripe. The second color is the stripe.

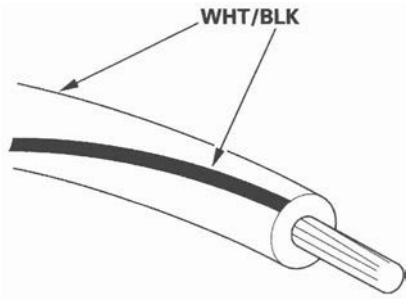

How to Check for DTCs with the Honda Diagnostic System (HDS)

NOTE: For specific operations, refer to the user's manual that came with the Honda Diagnostic System (HDS).

1. Connect the HDS to the data link connector (DLC) (A) located under the driver's side of the dashboard.

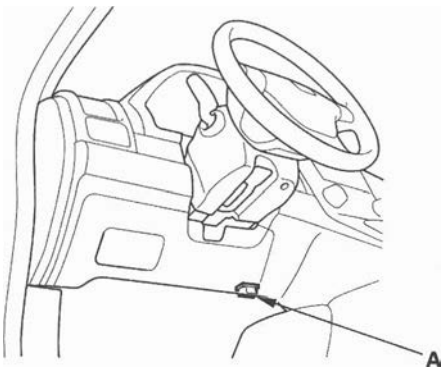

2. Turn the ignition switch ON (II).
3. Make sure the HDS communicates with the vehicle, if it doesn't, troubleshoot the DLC circuit (see page 11-197).
4. Enter the BODY ELECTRICAL then select the TEST MODE menu.
5. Check for DTCs with the HDS.
6. If any DTCs are indicated, note them, and go to the indicated DTC troubleshooting.

Relay and Control Unit Locations

Engine Compartment

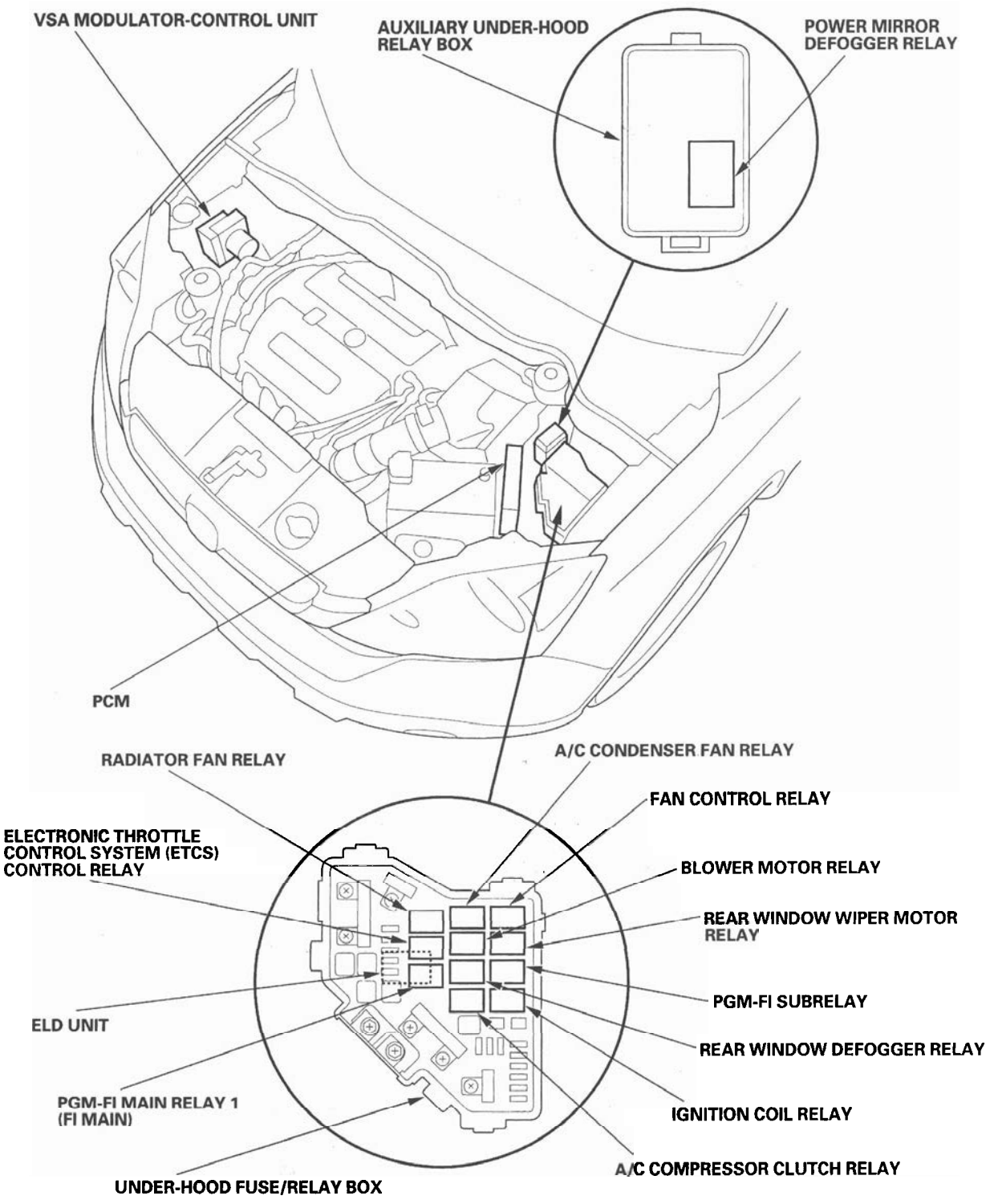

Relay and Control Unit Locations

Dashboard

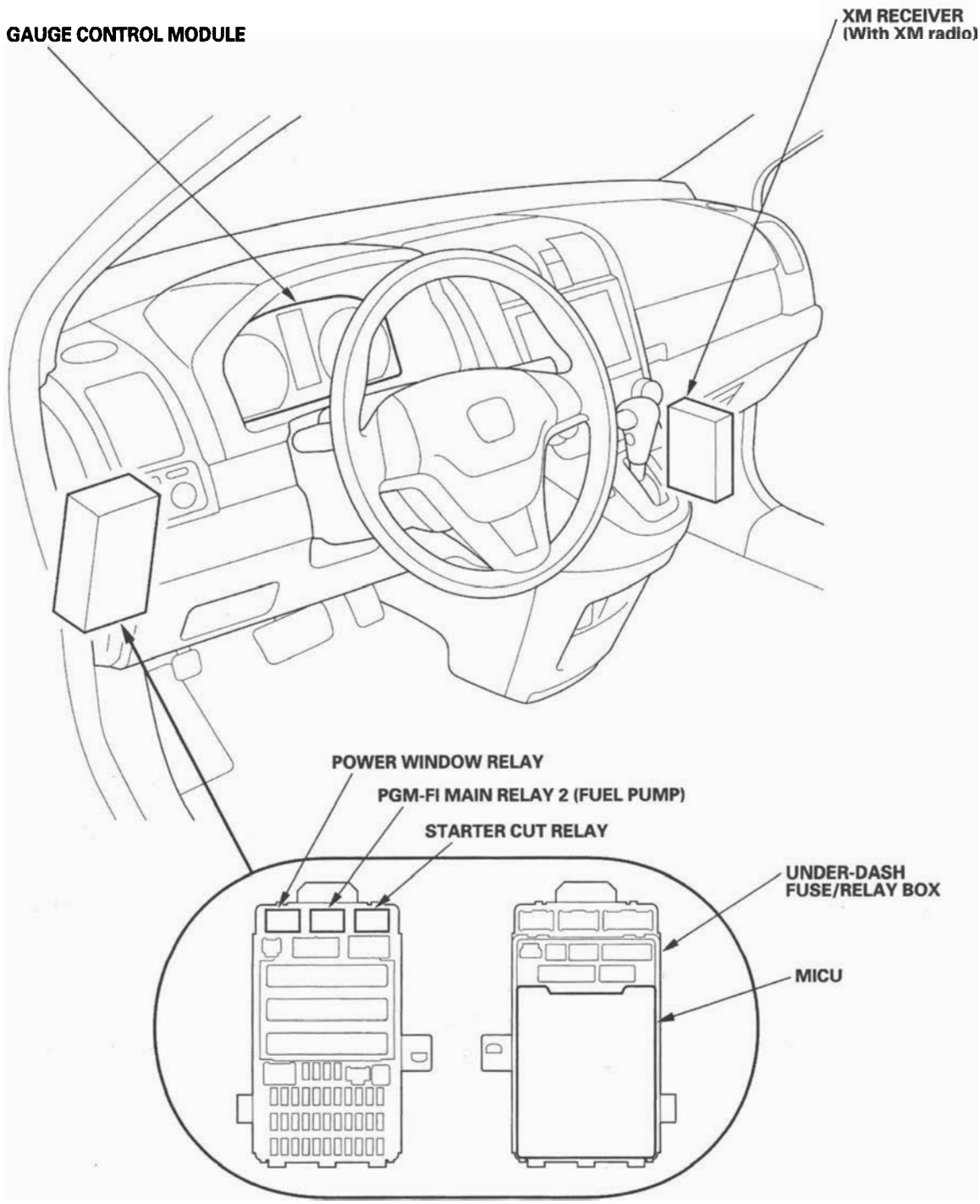

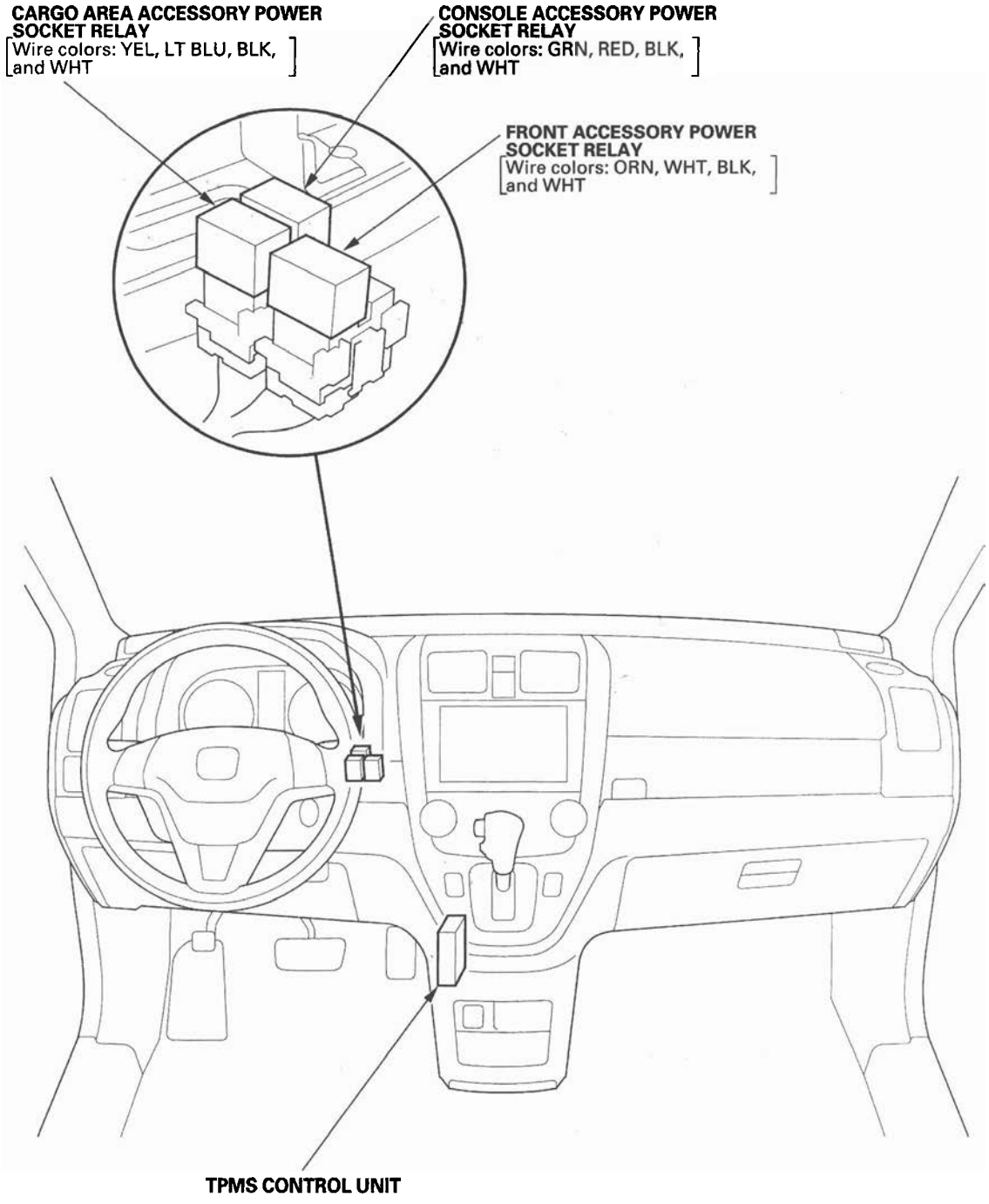
CARGO AREA ACCESSORY POWER SOCKET RELAY
[Wire colors: YEL, LT BLU, BLK, and WHT]
CONSOLE ACCESSORY POWER SOCKET RELAY
[Wire colors: GRN, RED, BLK, and WHT]
FRONT ACCESSORY POWER SOCKET RELAY
[Wire colors: ORN, WHT, BLK, and WHT]
TPMS CONTROL UNIT

(cont'd)

Relay and Control Unit Locations

Dashboard (cont'd)

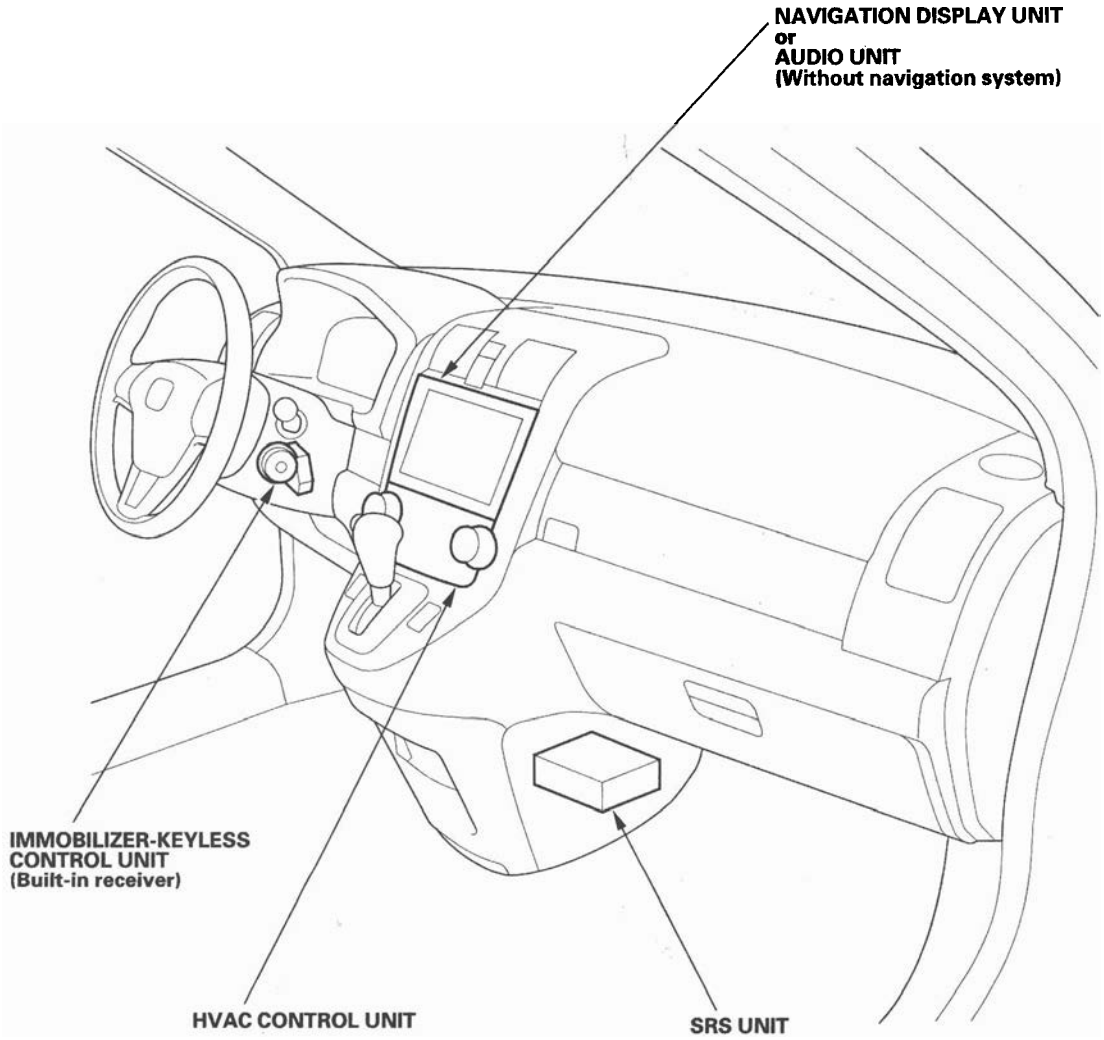

Door and Roof

Driver's Door

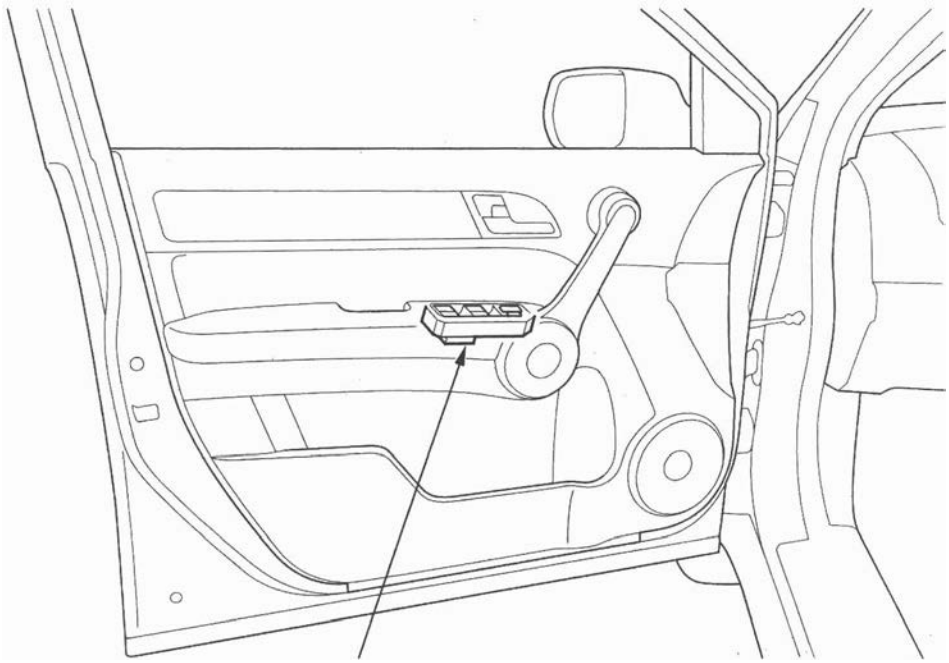

POWER WINDOW MASTER SWITCH
(Has built-in control unit)

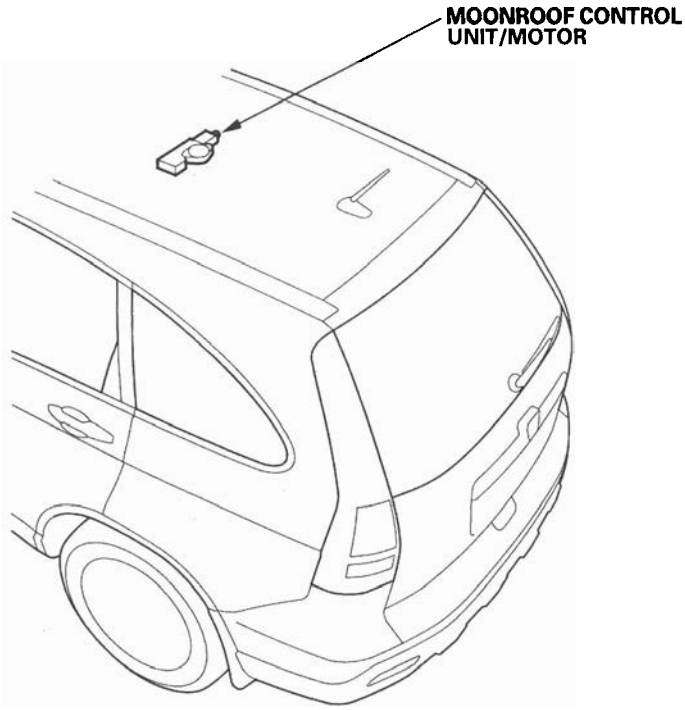

Seat

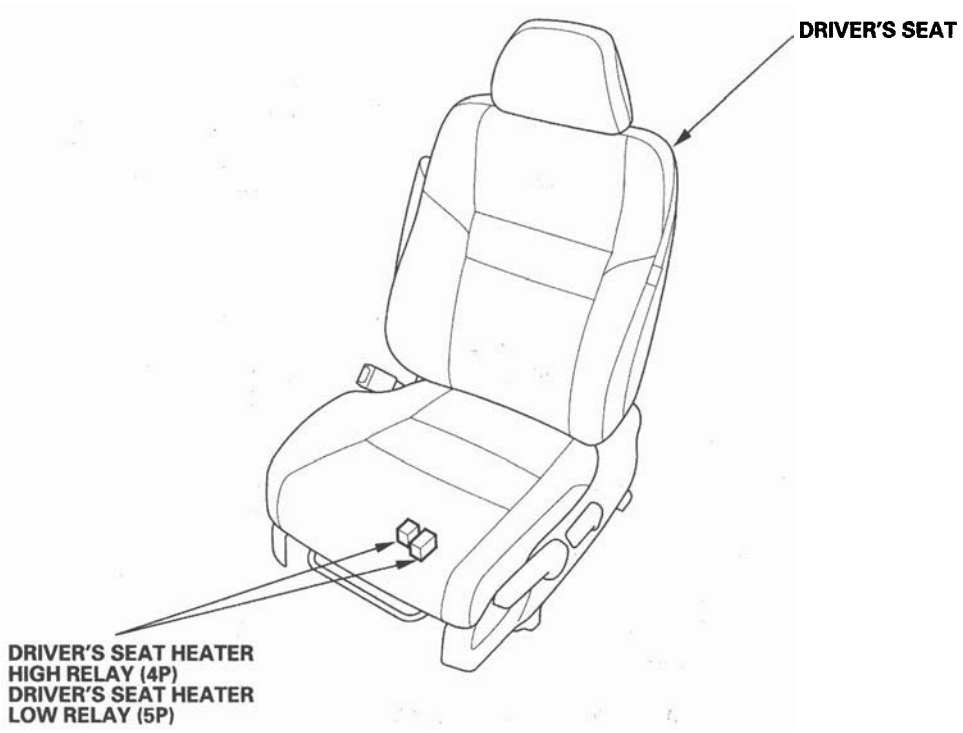
DRIVER'S SEAT
DRIVER'S SEAT HEATER HIGH RELAY (4P)
DRIVER'S SEAT HEATER LOW RELAY (5P)

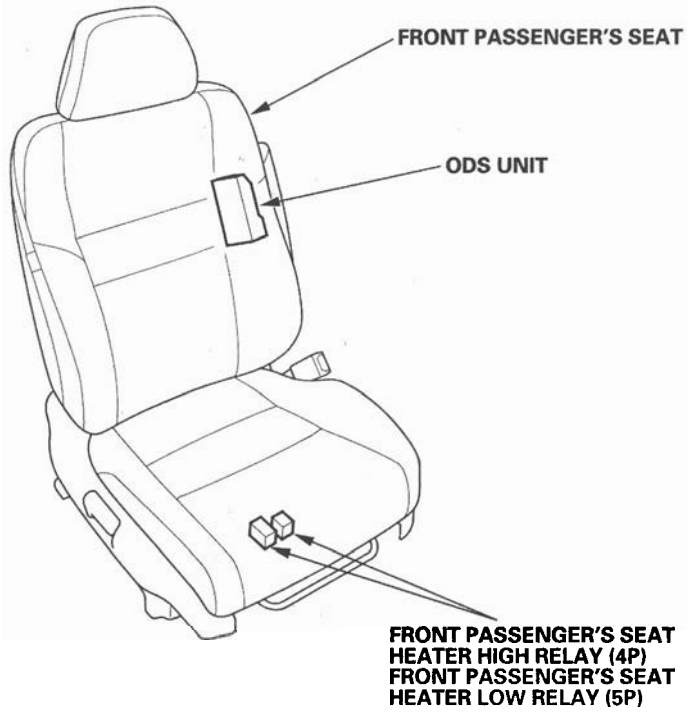
FRONT PASSENGER'S SEAT
ODS UNIT
FRONT PASSENGER'S SEAT HEATER HIGH RELAY (4P)
FRONT PASSENGER'S SEAT HEATER LOW RELAY (5P)

Connector Index

Identification numbers have been assigned to in-line connectors, junction connectors, and terminals. The number is preceded by the letter "C" for connectors "G" for ground terminals or "T" for non-ground terminals.

Harness	Location			Notes
	Engine Compartment	Dashboard	Others (Floor, Door, Tailgate, and Roof)	
A/C wire harness		C403, C505		(see page 22-55)
Battery ground cable	(−), T3, G1			(see page 22-14)
Cable reel subharness			C901	(see page 22-54)
Console subharness			C556	(see page 22-48)
Dashboard wire harness (View of driver's side)		C501, C502, C503, C601, C602, C751, C752, C801 G501		(see page 22-28)
Dashboard wire harness (View of middle)		C506, C507, C510 G502, G504, G505		(see page 22-30)
Dashboard wire harness (View of passenger's side)		C505, C508, C509, C761 G503		(see page 22-32)
Driver's door wire harness		C751, C752		(see page 22-44)
Driver's seat heater subharness			C551*1, C552	(see page 22-50)
Driver's seat position sensor harness			C551*2	(see page 22-50)
Engine compartment wire harness (Left branch)	C101, C301, C302 C303 G302	C401, C402, C403, C404, C405, C501, C502, C503 G401		(see page 22-22)
Engine compartment wire harness (Right branch)	G201, G202			(see page 22-26)
Engine ground cable	T4, G2			(see page 22-14)
Engine wire harness	C101 through C104 T103 through T106 G101			(see page 22-16)
Front engine compartment wire harness	C301 G301			(see page 22-20)
Front passenger's door wire harness		C761		(see page 22-45)
Front passenger's seat heater subharness			C557, C558	(see page 22-53)
Front passenger's seat subharness			C553, C554, C558	(see page 22-52)
Floor wire harness		C506, C507, C508	C551, C552, C553, C554, C555, C556, C605, C606, C781 G551, G552	(see page 22-34)
Fuel Tank subharness			C608	(see page 22-38)
Left rear door wire harness			C771	(see page 22-46)
ODS unit harness			C557	(see page 22-51)
Roof wire harness		C801		(see page 22-40)
Right rear door wire harness			C781	(see page 22-47)
Shift solenoid wire harness	C104			(see page 22-16)
Side wire harness (Left branch)		C401, C402, C601, C602	C603, through C607, C771 G602	(see page 22-36)
Side wire harness (Right branch)			C608 G601	(see page 22-38)
Starter subharness	(+), C102, C303, T1, T2, T101, T102			(see page 22-14)
Table subharness			C555	(see page 22-49)
Tailgate wire harness			C603, C604	(see page 22-42)

* 1: With seat heater
* 2: Without seat heater

Connector to Harness Index

Starter Subharness

Connector or Terminal	Ref	Cavities	Location	Connects to	Notes
A/C compressor	14	3	Right side of engine compartment		
Alternator	15	4	Right side of engine compartment		
Knock sensor	13	1	Middle of engine compartment		
Starter magnetic switch	10	1	Middle of engine compartment		
C102	11	10	Left side of engine compartment	Engine wire harness (see page 22-16)	
C303	5	1	Left side of engine compartment	Engine compartment wire harness (see page 22-22)	
T1	7		Left side of engine compartment	Under-hood fuse/relay box (see page 22-56)	
T2	12		Middle of engine compartment	Starter motor	
T101	6		Left side of engine compartment	Under-hood fuse/relay box (see page 22-56)	
T102	16		Right side of engine compartment	Alternator B terminal	
(+)	3		Left side of engine compartment	Battery positive terminal	

Battery Ground Cable

Connector or Terminal	Ref	Cavities	Location	Connects to	Notes
(−)	4		Left side of engine compartment	Battery negative terminal	
T3	8		Left side of engine compartment	Transmission housing	
G1	9		Left side of engine compartment	Body ground, via battery ground cable	

Engine Ground Cable

Connector or Terminal	Ref	Cavities	Location	Connects to	Notes
T4	1		Right side of engine compartment	Engine	
G2	2		Right side of engine compartment	Body ground, via engine ground cable	

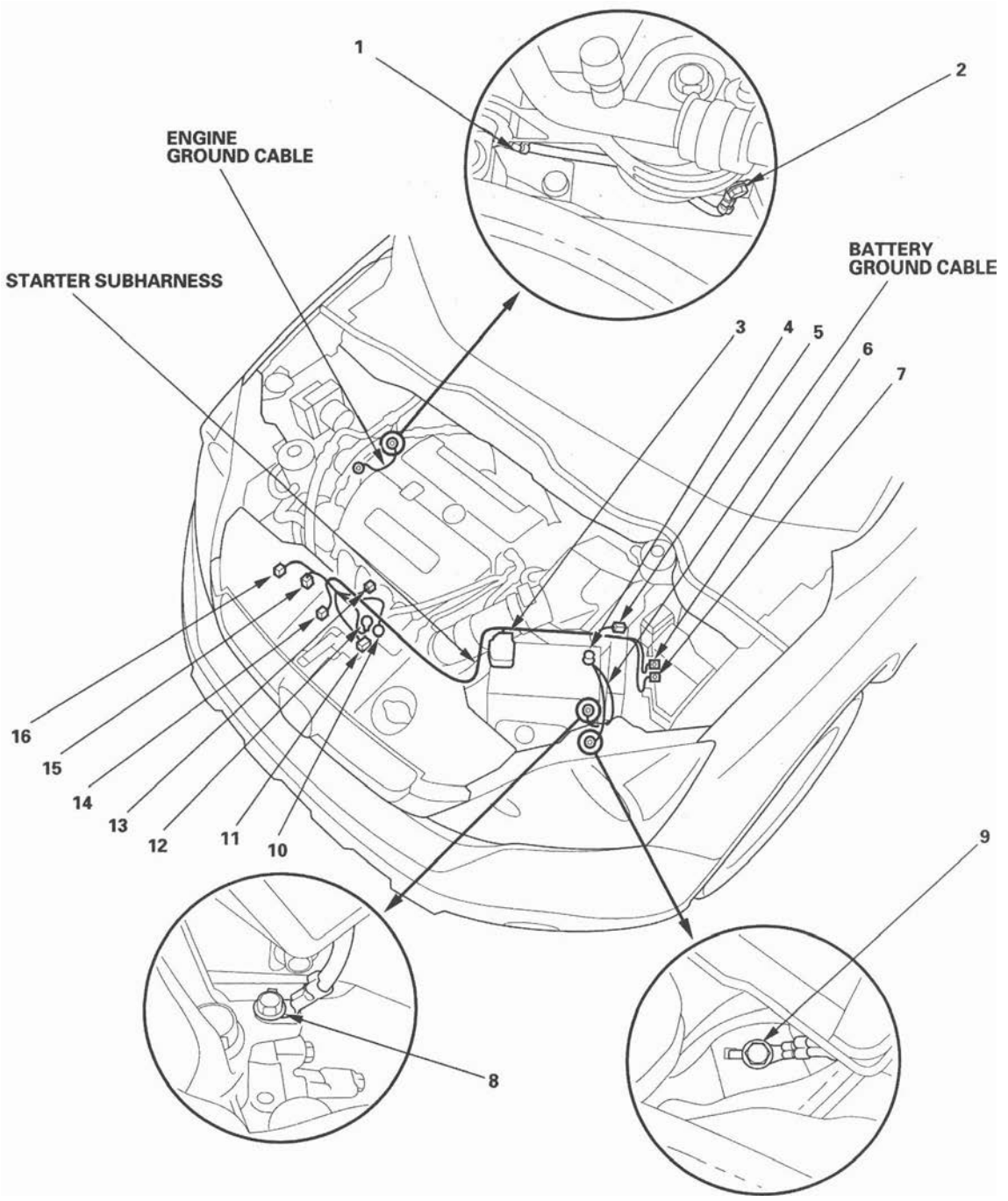
1
2
ENGINE
GROUND CABLE
STARTER SUBHARNESS
BATTERY
GROUND CABLE
3
4
5
6
7
16
15
14
13
12
11
10
8
9

Connector to Harness Index (cont'd)

Engine Wire Harness

Connector or Terminal	Ref	Cavities	Location	Connects to	Notes
A/T clutch pressure control solenoid valve A	23	2	Transmission housing		
A/T clutch pressure control solenoid valve B	26	2	Transmission housing		
A/T clutch pressure control solenoid valve C	24	2	Transmission housing		
Camshaft position (CMP) sensor A	11	3	Middle of engine compartment		
Camshaft position (CMP) sensor B	12	3	Middle of engine compartment		
Crankshaft position (CKP) sensor	2	3	Middle of engine compartment		
Engine coolant temperature (ECT) sensor 1	34	2	Middle of engine compartment		
EVAP canister purge valve	10	2	Middle of engine compartment		
Exhaust gas recirculation (EGR) valve and position sensor	13	6	Middle of engine compartment		
Input shaft (mainshaft) speed sensor	18	3	Transmission housing		
Manifold absolute pressure (MAP) sensor	35	3	Middle of engine compartment		
Mass air flow (MAF) sensor/Intake air temperature (IAT) sensor	15	5	Middle of engine compartment		
Ignition coil No. 1	6	3	Middle of engine compartment		
Ignition coil No. 2	7	3	Middle of engine compartment		
Ignition coil No. 3	8	3	Middle of engine compartment		
Ignition coil No. 4	9	3	Middle of engine compartment		
Injector No. 1	41	2	Middle of engine compartment		
Injector No. 2	40	2	Middle of engine compartment		
Injector No. 3	39	2	Middle of engine compartment		
Injector No. 4	38	2	Middle of engine compartment		
Oil pressure switch	4	1	Middle of engine compartment		
Output shaft (countershaft) speed sensor	16	3	Transmission housing		
PCM connector B	21	44	Left side of engine compartment		
PCM connector C	20	44	Left side of engine compartment		
Rocker arm oil control solenoid	3	2	Middle of engine compartment		
Rocker arm oil pressure switch	5	2	Middle of engine compartment		
Transmission range switch	17	10	Transmission housing		
Throttle position sensor	33	6	Middle of engine compartment		
VTC oil control solenoid valve	1	2	Middle of engine compartment		
2nd clutch pressure switch	22	1	Transmission housing		
3nd clutch pressure switch	25	1	Transmission housing		

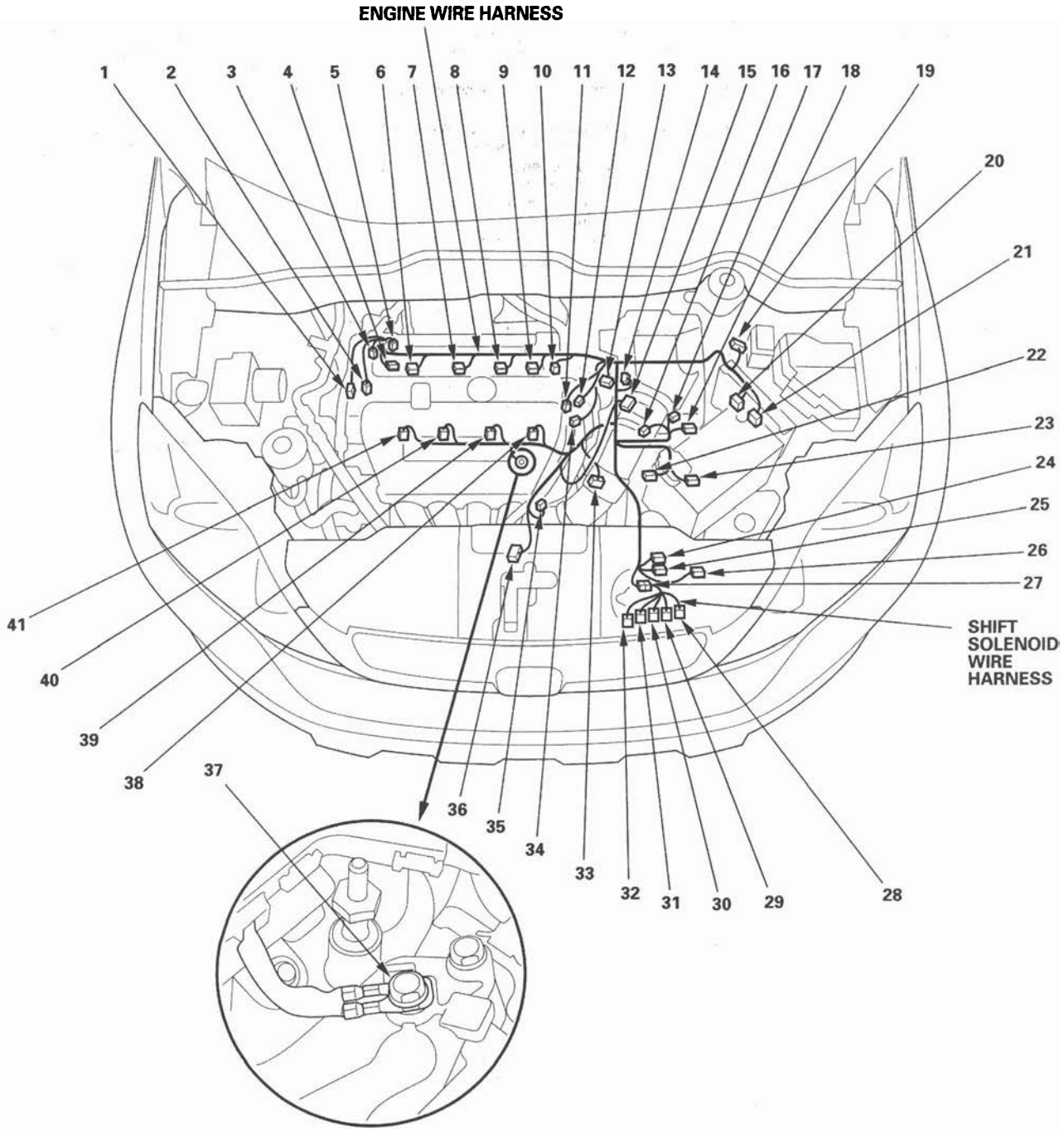
ENGINE WIRE HARNESS
1
2
3
4
5
6
7
8
9
10
11
12
13
14
15
16
17
18
19
20
21
22
23
24
25
26
27
28
29
30
31
32
33
34
35
36
37
38
39
40
41
SHIFT SOLENOID WIRE HARNESS

(cont'd)

Connector to Harness Index (cont'd)

Engine Wire Harness (cont'd)

Connector or Terminal	Ref	Cavities	Location	Connects to	Notes
C101	19	23	Left side of engine compartment	Engine compartment wire harness (see page 22-22)	
C102	36	10	Left side of engine compartment	Starter subharness (see page 22-14)	
C103 (Junction connector)	14	24	Middle of engine compartment		
C104	27	5	Transmission housing	Shift solenoid wire harness	
T103 (Terminal joint)		——	Middle of engine compartment		
T104 (Terminal joint)		——	Middle of engine compartment		
T105 (Terminal joint)		——	Middle of engine compartment		
T106 (Terminal joint)		——	Middle of engine compartment		
G101	37	——	Middle of engine compartment	Body ground, via engine wire harness	

Shift Solenoid Wire Harness

Connector or Terminal	Ref	Cavities	Location	Connects to	Notes
ATF temperature sensor	32	2	Transmission housing		
Shift solenoid valve A	28	2	Transmission housing		
Shift solenoid valve B	29	2	Transmission housing		
Shift solenoid valve C	30	2	Transmission housing		
Shift solenoid valve D	31	2	Transmission housing		
C104	27	8	On the transmission housing	Engine wire harness	

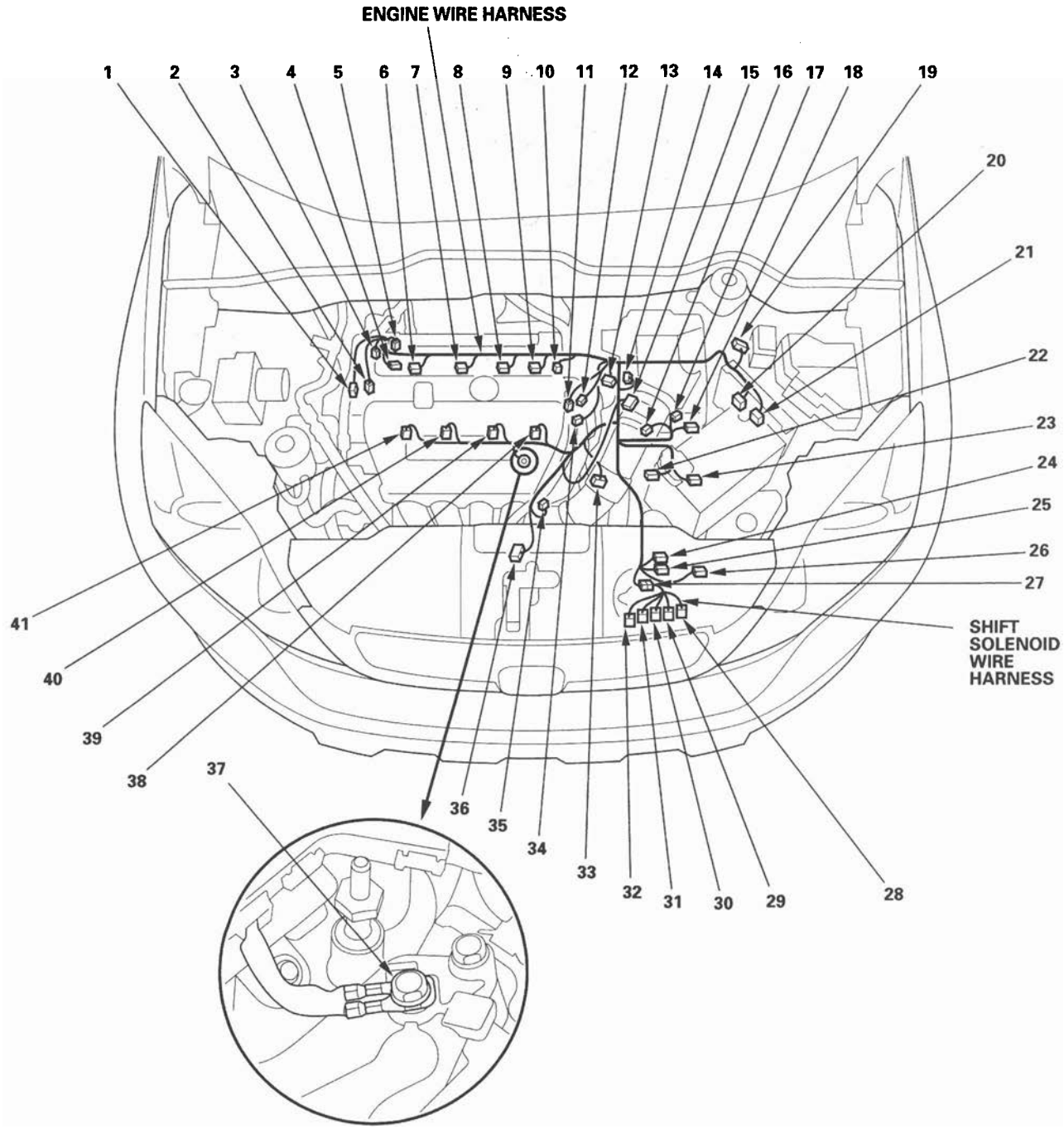
ENGINE WIRE HARNESS
1
2
3
4
5
6
7
8
9
10
11
12
13
14
15
16
17
18
19
20
21
22
23
24
25
26
27
28
29
30
31
32
33
34
35
36
37
38
39
40
41
SHIFT SOLENOID WIRE HARNESS

Connector to Harness Index (cont'd)

Front Engine Compartment Wire Harness

Connector or Terminal	Ref	Cavities	Location	Connects to	Notes
A/C condenser fan motor	6	2	Front of engine compartment		
ECT sensor 2	13	2	Front of engine compartment		
Hood switch	5	2	Front of engine compartment		
Horn (high)	7	1	Front of engine compartment		
Horn (low)	15	1	Behind left side of front bumper		
Left front parking light	10	2	Behind left headlight		
Left front turn signal light	8	2	Behind left headlight		
Left headlight	9	3	Behind left headlight		
Outside air temperature sensor	14	2	Behind middle of front bumper		
Radiator fan motor	4	2	Front of engine compartment		
Right front parking light	1	2	Behind right headlight		
Right front turn signal light	3	2	Behind right headlight		
Right headlight	2	3	Behind right headlight		
C301	11	31	Left side of engine compartment	Engine compartment wire harness (see page 22-22)	
G301	12		Left side of engine compartment	Body ground, via front engine compartment wire harness	

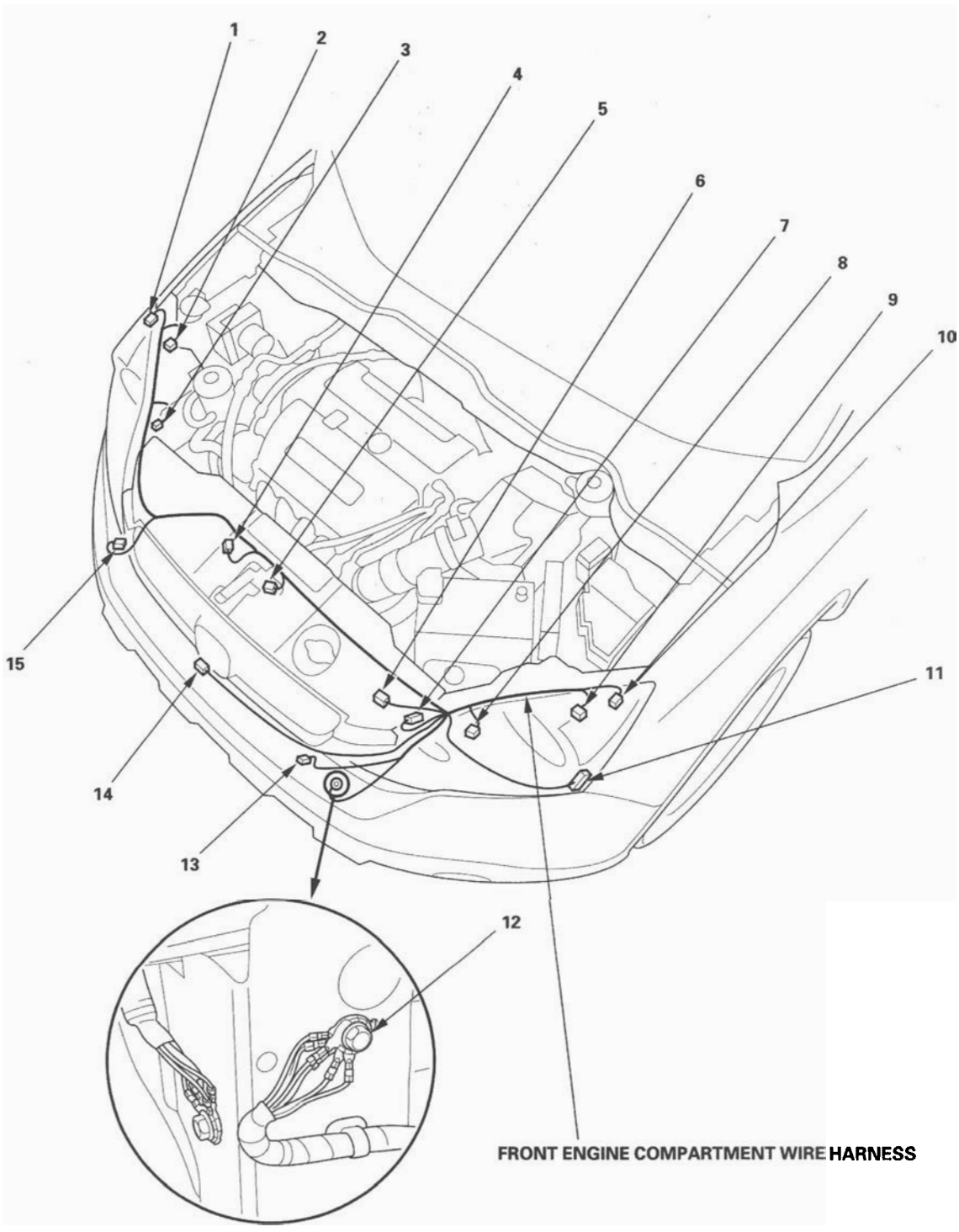
1
2
3
4
5
6
7
8
9
10
11
12
13
14
15
FRONT ENGINE COMPARTMENT WIRE HARNESS

Connector to Harness Index (cont'd)

Engine Compartment Wire Harness (Left branch)

Connector or Terminal	Ref	Cavities	Location	Connects to	Notes
APP sensor	2	6	Under left side of dash		
Brake fluid level switch	6	2	Left side of engine compartment		
Brake pedal position switch	5	4	Under left side of dash		
Left front impact sensor	31	2	Under left side headlight		
Left front wheel sensor	33	2	Left side of engine compartment		
Optional connector	17	2	Under left side of dash		
Optional connector	29	1	Left side of engine compartment		
Parking brake switch	7	1	Under left side of dash		
PCM connector A	32	44	Left side of engine compartment		
Power mirror defogger relay	35	4	In auxiliary under-hood fuse/relay box		
Under-dash fuse/relay box connector F (see page 22-57)	9	34	Under-dash fuse/relay box		
Under-dash fuse/relay box connector G (see page 22-57)	10	42	Under-dash fuse/relay box		
Under-hood fuse/relay box connector A (ELD unit) (see page 22-56)	22	3	Behind under-hood fuse/relay box		
Under-hood fuse/relay box connector C (see page 22-56)	24	2	Behind under-hood fuse/relay box		
Under-hood fuse/relay box connector D (see page 22-56)	26	8	Behind under-hood fuse/relay box		
Under-hood fuse/relay box connector E (see page 22-56)	25	10	Behind under-hood fuse/relay box		
Under-hood fuse/relay box connector F (see page 22-56)	28	20	Behind under-hood fuse/relay box		
Under-hood fuse/relay box connector G (see page 22-56)	20	1	Behind under-hood fuse/relay box		
Under-hood fuse/relay box connector H (see page 22-56)	21	1	Behind under-hood fuse/relay box		
Under-hood fuse/relay box connector J (see page 22-56)	27	4	Behind under-hood fuse/relay box		
Under-hood fuse/relay box connector K (see page 22-56)	19	2	Behind under-hood fuse/relay box		

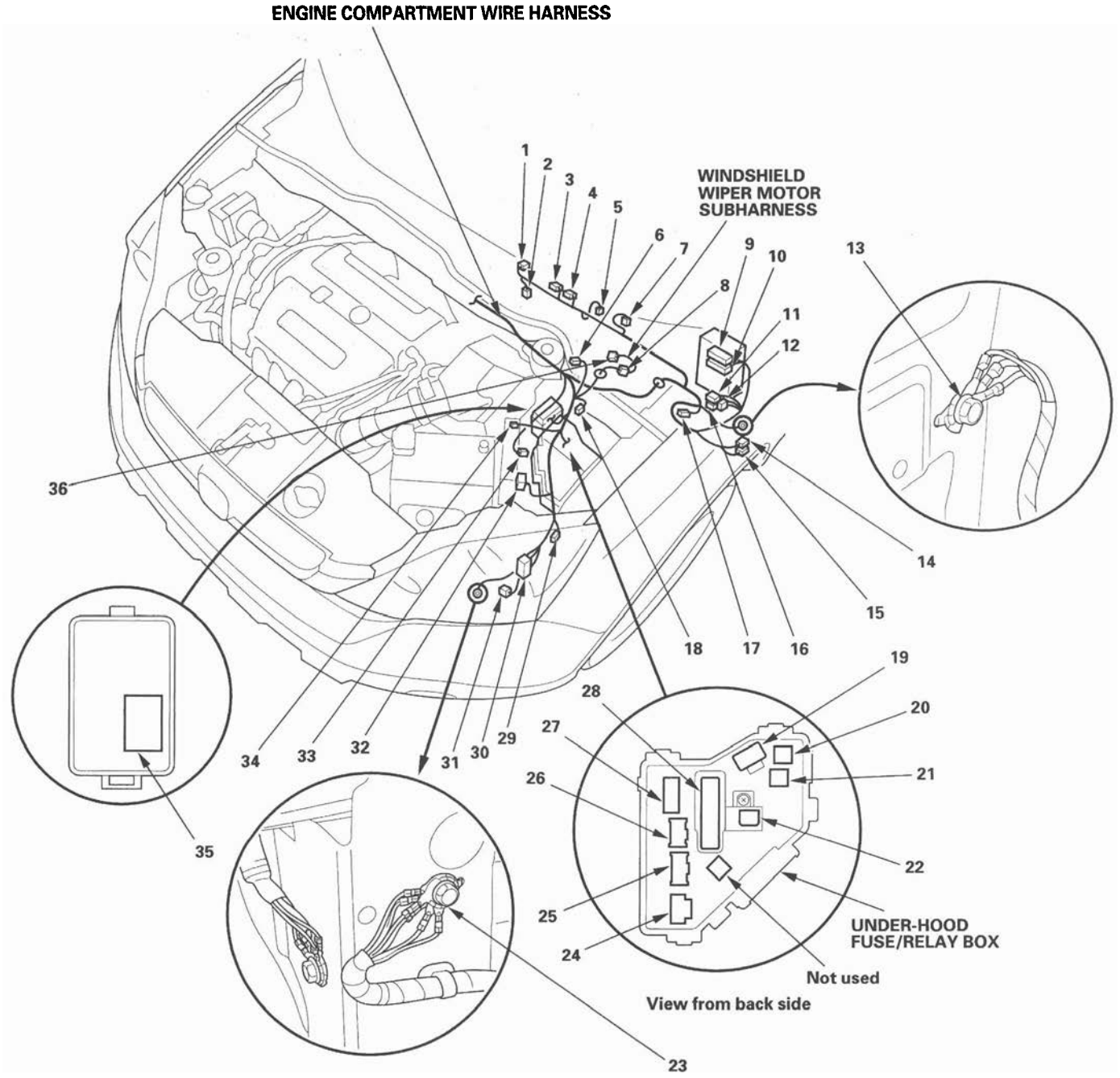
ENGINE COMPARTMENT WIRE HARNESS
WINDSHIELD WIPER MOTOR SUBHARNESS
1
2
3
4
5
6
7
8
9
10
11
12
13
14
15
16
17
18
19
20
21
22
23
24
25
26
27
28
29
30
31
32
33
34
35
36
UNDER-HOOD FUSE/RELAY BOX
Not used
View from back side

(cont'd)

Connector to Harness Index (cont'd)

Engine Compartment Wire Harness (Left branch) (cont'd)

Connector or Terminal	Ref	Cavities	Location	Connects to	Notes
C101	18	23	Left side of engine compartment	Engine wire harness (see page 22-16)	
C301	30	31	Left side of engine compartment	Front engine compartment wire harness (see page 22-20)	
C302	8	5	Under left side of windshield	Windshield wiper motor subharness	
C303	34	1	Left side of engine compartment	Starter subharness (see page 22-14)	
C401	14	12	Under left side of dash	Side wire harness (see page 22-36)	
C402	15	8	Under left side of dash	Side wire harness (see page 22-36)	
C403	1	2	Under middle of dash	A/C wire harness (see page 22-55)	
C404 (Junction connector)	3	12	Under left side of dash		
C405 (Junction connector)	4	12	Under left side of dash		
C501	11	24	Under left side of dash	Dashboard wire harness (see page 22-28)	
C502	16	23	Under left side of dash	Dashboard wire harness (see page 22-28)	
C503	12	4	Under left side of dash	Dashboard wire harness (see page 22-28)	
G302	23		Left side of engine compartment	Body ground, via engine compartment wire harness	
G401	13		Left side of dash	Body ground, via engine compartment wire harness	

Windshield Wiper Motor Subharness

Connector or Terminal	Ref	Cavities	Location	Connects to	Notes
Windshield wiper motor	36	5	Under left side of windshield		
C302	8	5	Under left side of windshield	(Engine compartment wire harness	

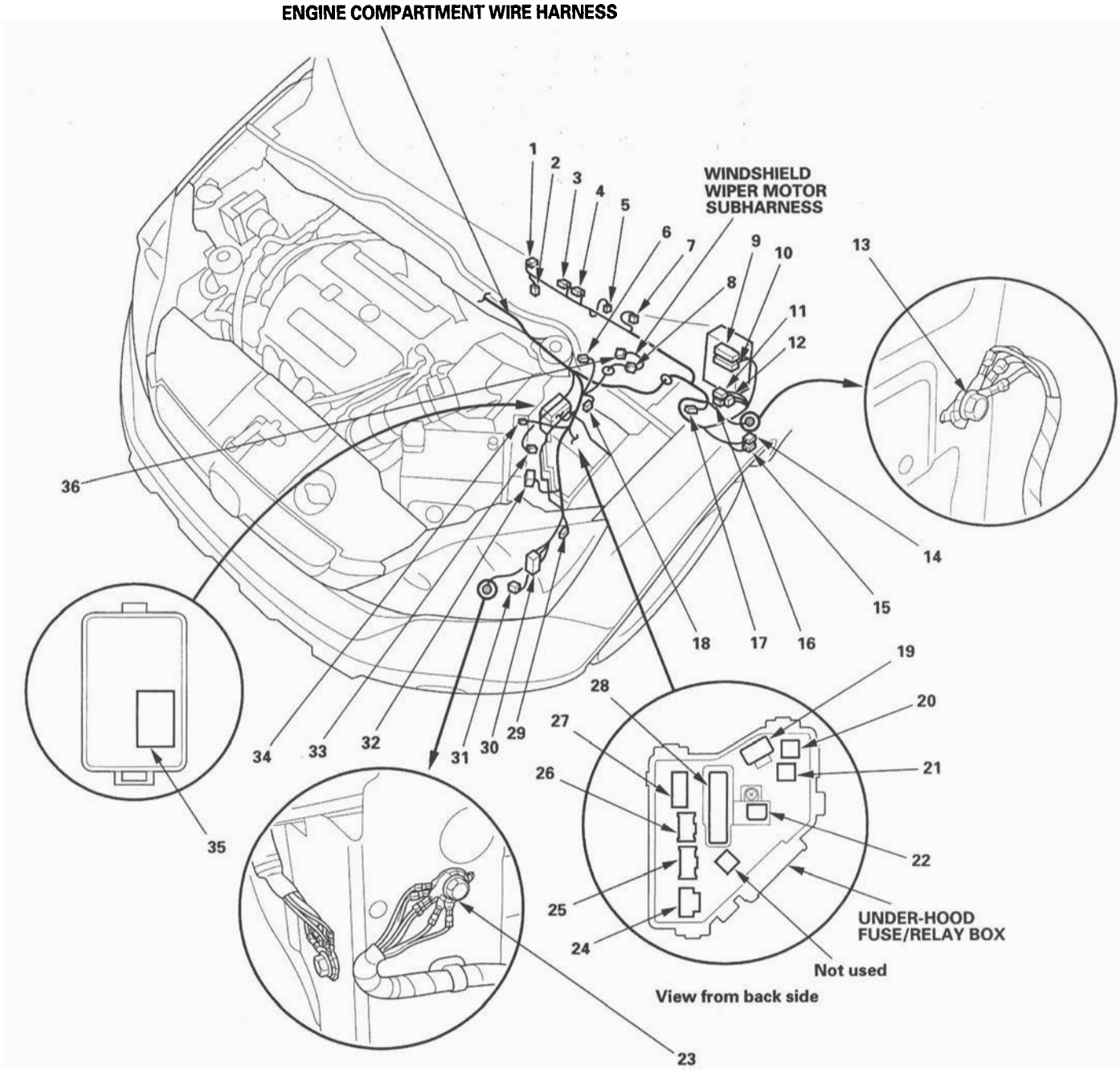
ENGINE COMPARTMENT WIRE HARNESS
WINDSHIELD WIPER MOTOR SUBHARNESS
1
2
3
4
5
6
7
8
9
10
11
12
13
14
15
16
17
18
19
20
21
22
23
24
25
26
27
28
29
30
31
32
33
34
35
36
UNDER-HOOD FUSE/RELAY BOX
Not used
View from back side

Connector to Harness Index (cont'd)

Engine Compartment Wire Harness (Right branch)

Connector or Terminal	Ref	Cavities	Location	Connects to	Notes
A/C pressure sensor	8	3	Right side of engine compartment		
A/F sensor (Sensor 1)	10	4	Exhaust manifold		
Power steering pressure (PSP) switch	1	2	Right side of engine compartment		
Right front impact sensor	4	2	Under right headlight		
Right front wheel sensor	2	2	Behind right side of front bumper		
Secondary HO2S (Sensor 2)	11	6	Exhaust manifold		
VSA modulator-control unit	3	46	Right side of engine compartment		
Windshield washer motor	7	2	Behind right side of front bumper		
Windshield washer fluid level switch	6	2	Behind right side of front bumper		Canada
G201	5		Right side of engine compartment	Body ground, via engine compartment wire harness	Canada
G202	9		Right side of engine compartment	Body ground, via engine compartment wire harness	

ENGINE COMPARTMENT WIRE HARNESS

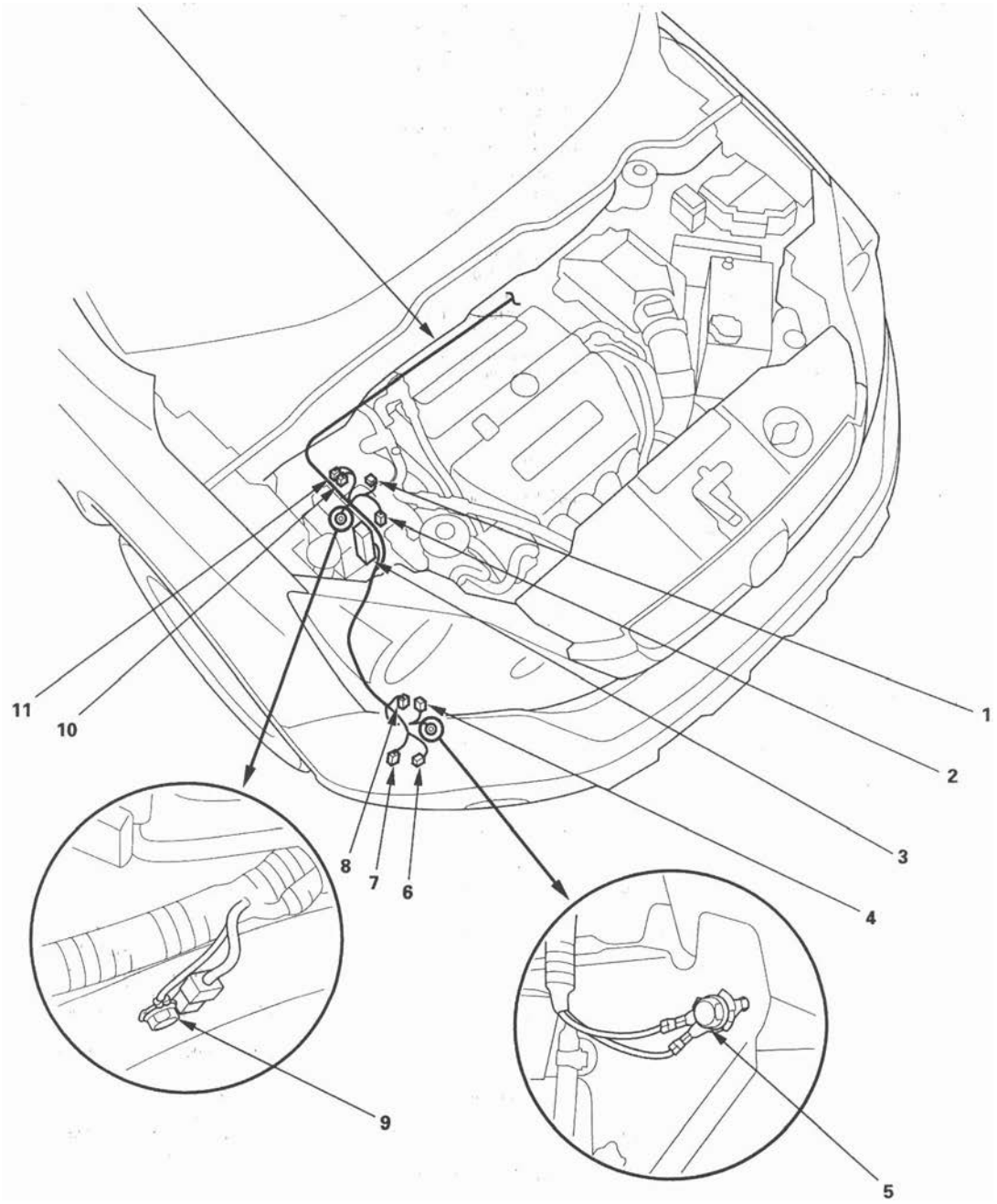

Connector to Harness Index (cont'd)

Dashboard Wire Harness (View of driver's side)

Connector or Terminal	Ref	Cavities	Location	Connects to	Notes
Cargo area accessory power socket relay	15	4	Under middle of dash		
Console accessory power socket relay	14	4	Under middle of dash		
Front accessory power socket relay	13	4	Under middle of dash		
Gauge control module connector	16	36	Behind gauge		
Junction box connector A	7	6	Under middle of dash		
Junction box connector B	8	6	Under middle of dash		
Junction box connector C	2	14	Under middle of dash		
Junction box connector D	5	6	Under middle of dash		
Junction box connector E	6	18	Under middle of dash		
Junction box connector F	9	10	Under middle of dash		
Junction box connector G	4	14	Under middle of dash		
Junction box connector H	12	10	Under middle of dash		
Junction box connector J	10	22	Under middle of dash		
Junction box connector K	3	14	Under middle of dash		
Junction box connector L	11	10	Under middle of dash		
Junction box connector M	1	10	Under middle of dash		
Left tweeter	31	2	Left side of dash		* 1
Memory erase signal (MES) connector	28	2	Left kick panel		
Power mirror switch	17	13	Left side of dash		
Under-dash fuse/relay box connector C (see page 22-57)	29	4	Left kick panel		
Under-dash fuse/relay box connector D (see page 22-57)	30	2	Left kick panel		
Under-dash fuse/relay box connector J (see page 22-57)	33	4	Left kick panel		
Under-dash fuse/relay box connector K (see page 22-57)	34	8	Left kick panel		
Under-dash fuse/relay box connector M (see page 22-57)	36	10	Left kick panel		
Under-dash fuse/relay box connector N (see page 22-57)	38	14	Left kick panel		
Under-dash fuse/relay box connector P (see page 22-57)	35	10	Left kick panel		
Under-dash fuse/relay box connector Q (see page 22-57)	37	16	Left kick panel		
Under-dash fuse/relay box connector R (see page 22-57)	39	20	Left kick panel		
Under-dash fuse/relay box connector S (see page 22-57)	40	20	Left kick panel	MICU connector B	
Under-dash fuse/relay box connector T (see page 22-57)	32	34	Left kick panel	MICU connector A	
VSA OFF switch	18	5	Left side of dash		
C501	26	24	Under left side of dash	Engine compartment wire harness (see page 22-22)	
C502	25	23	Under left side of dash	Engine compartment wire harness (see page 22-22)	
C503	24	4	Under left side of dash	Engine compartment wire harness (see page 22-22)	
C601	20	18	Under left side of dash	Side wire harness (see page 22-36)	
C602	19	16	Under left side of dash	Side wire harness (see page 22-36)	
C751	23	18	Under left side of dash	Driver's door wire harness (see page 22-44)	
C752	22	23	Under left side of dash	Driver's door wire harness (see page 22-44)	
C801	27	20	Under left side of dash	Roof wire harness (see page 22-40)	
G501	21		Under left side of dash	Body ground, via dashboard wire harness	

* 1: EX and EX-L models

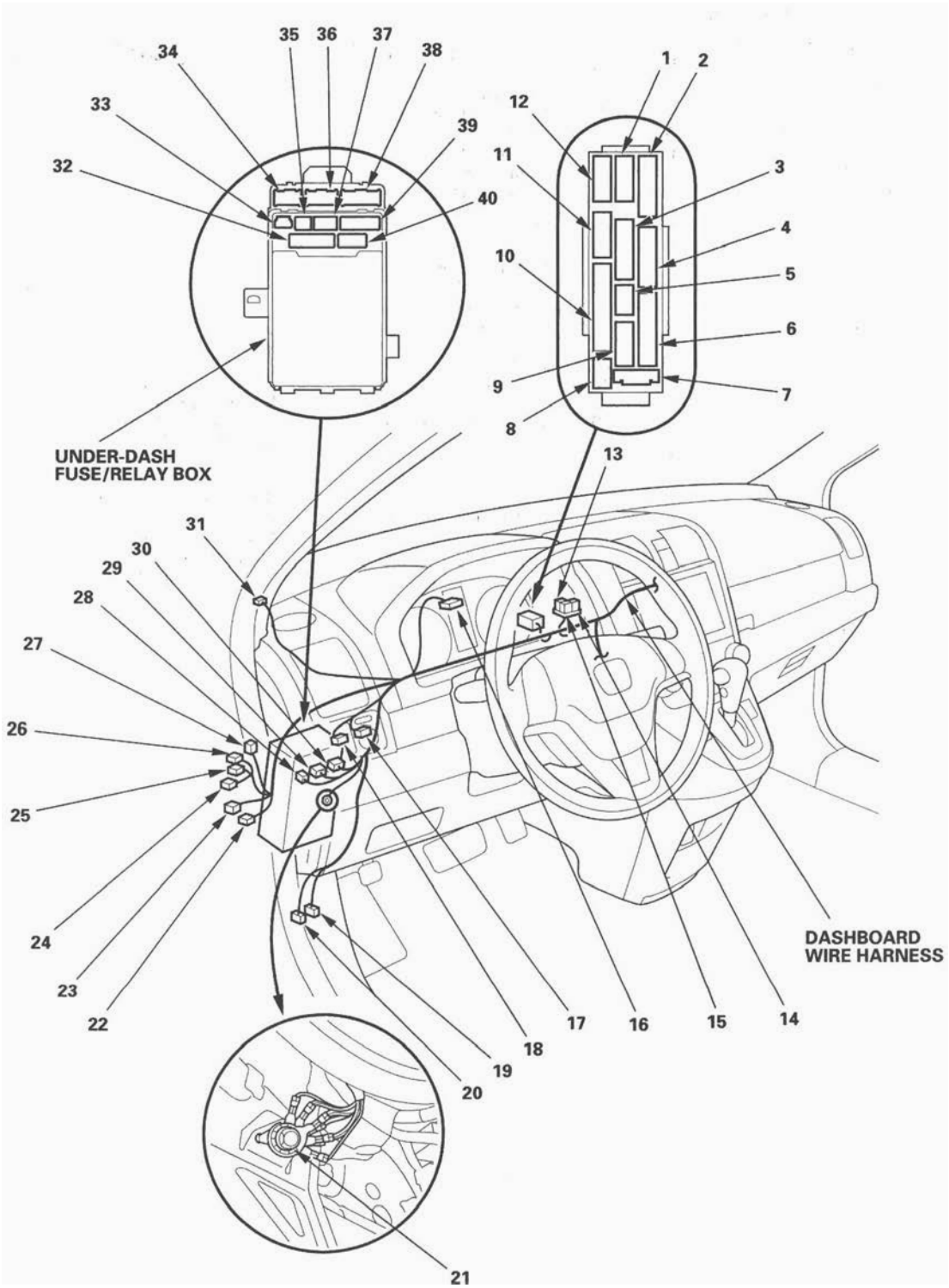
UNDER-DASH
FUSE/RELAY BOX
DASHBOARD
WIRE HARNESS

Connector to Harness Index (cont'd)

Dashboard Wire Harness (View of middle)

Connector or Terminal	Ref	Cavities	Location	Connects to	Notes
Audio unit connector A	5	17	Middle of dash		* 2
Audio unit connector B	7	20	Middle of dash		* 2
Audio unit connector C	3	5	Middle of dash		* 2
Audio unit connector D (GA-BUS)	8	14	Middle of dash		* 2
Data link connector	18	16	Middle of dash		
Driver's seat heater switch	16	6	Middle of dash		* 4
Front accessory power socket	15	2	Middle of dash		
Navigation unit connector A	5	17	Middle of dash		* 1
Navigation unit connector B	7	22	Middle of dash		* 1
Navigation unit connector C	3	5	Middle of dash		* 1
Navigation unit connector D	8	14	Middle of dash		* 1
Navigation unit connector E	6	12	Middle of dash		* 1
Navigation unit connector F	4	5	Middle of dash		* 1
Navigation unit connector G	2	7	Middle of dash		* 3
SRS unit connector A	12	28	Under middle of dash		
TPMS control unit	17	20	Under middle of dash		TPMS
C506	13	18	Under middle of dash	Floor wire harness (see page 22-34)	
C507	14	20	Under middle of dash	Floor wire harness (see page 22-34)	
C510 (Junction connector)	1	12	Under middle of dash		
G502	9		Under middle of dash	Body ground, via dashboard wire harness	
G504	10		Under middle of dash	Body ground, via dashboard wire harness	
G505	11		Under middle of dash	Body ground, via dashboard wire harness	

* 1: With navigation
* 2: Without navigation
* 3: With navigation and rearview camera
* 4: With seat heater

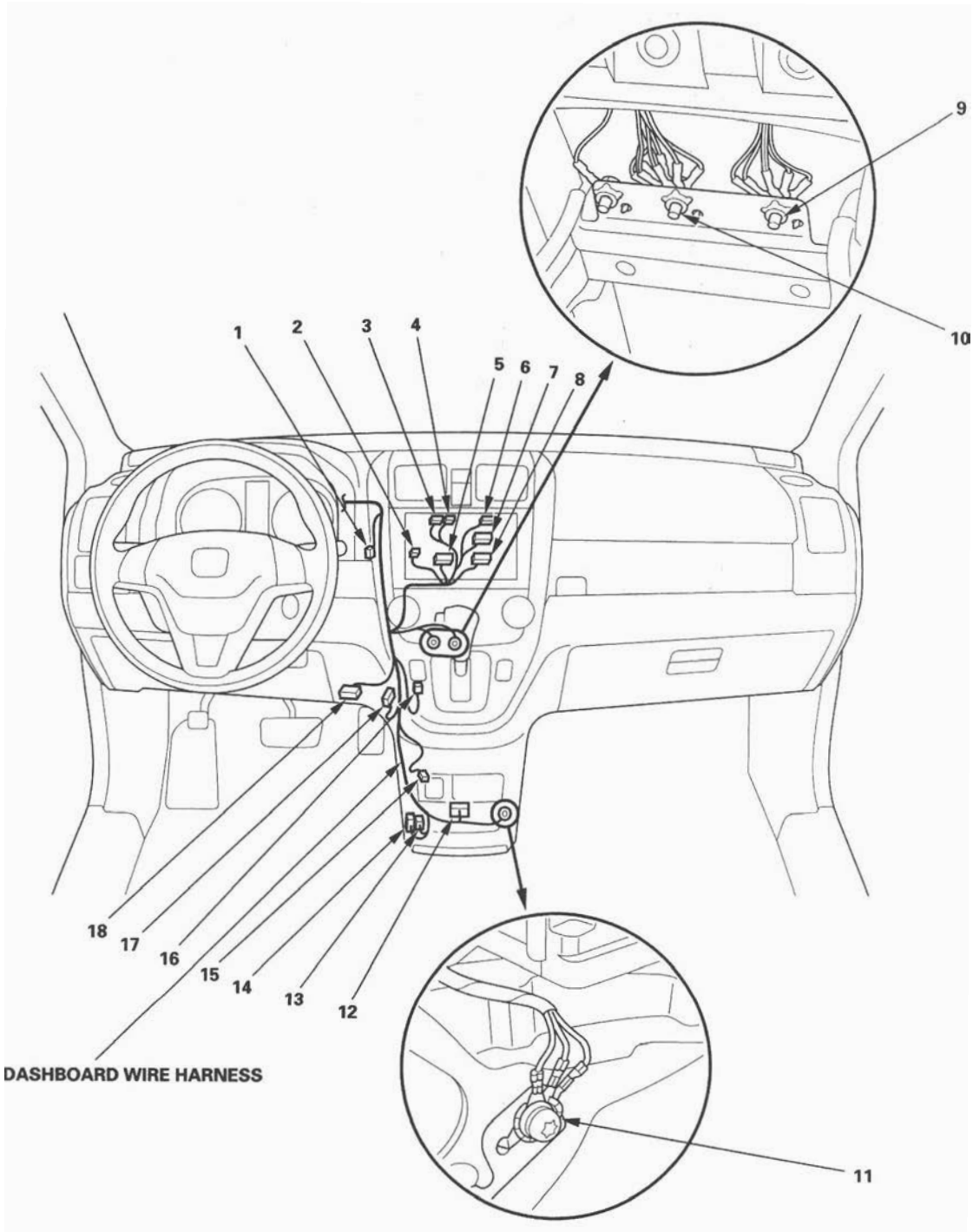
1
2
3
4
5
6
7
8
9
10
11
12
13
14
15
16
17
18
DASHBOARD WIRE HARNESS

Connector to Harness Index (cont'd)

Dashboard Wire Harness (View of passenger's side)

Connector or Terminal	Ref	Cavities	Location	Connects to	Notes
Cable reel connector A	22	20	In steering column cover		
Cable reel connector B	16	4	In steering column cover		
Combination light switch	21	12	In steering column cover		
D3 switch/Park-pin switch	14	6	Middle of dash		
Front passenger's seat heater switch	13	7	Middle of dash		* 1
Glove box light	4	2	Under middle of dash		
Hazard warning switch/passenger's airbag cutoff indicator	2	6	Middle of dash		
HVAC control unit	12	28	Middle of dash		
Ignition switch	19	7	In steering column cover		
Ignition key switch	18	6	In steering column cover		
Immobilizer-keyless control unit	17	7	In steering column cover		
Passenger's airbag inflator	5	4	Under right side of dash		
Right tweeter	6	2	Right side of dash		* 2
Shift lock solenoid	15	2	Middle of dash		
Steering angle sensor	20	5	In steering column cover		
Wiper/washer switch	1	8	In steering column cover		
XM receiver	8	14	Under right side of dash		* 3
C505	3	24	Under middle of dash	A/C wire harness (see page 22-55)	
C508	9	12	Under right side of dash	Floor wire harness (see page 22-34)	* 3
C509 (Junction connector)	10	24	Under right side of dash		* 3
C761	7	18	Under right side of dash	Front passenger's door wire harness (see page 22-45)	
G503	11		Under middle of dash	Body ground, via dashboard wire harness	

* 1: With seat heater
* 2: EX and EX-L models
* 3: With XM radio

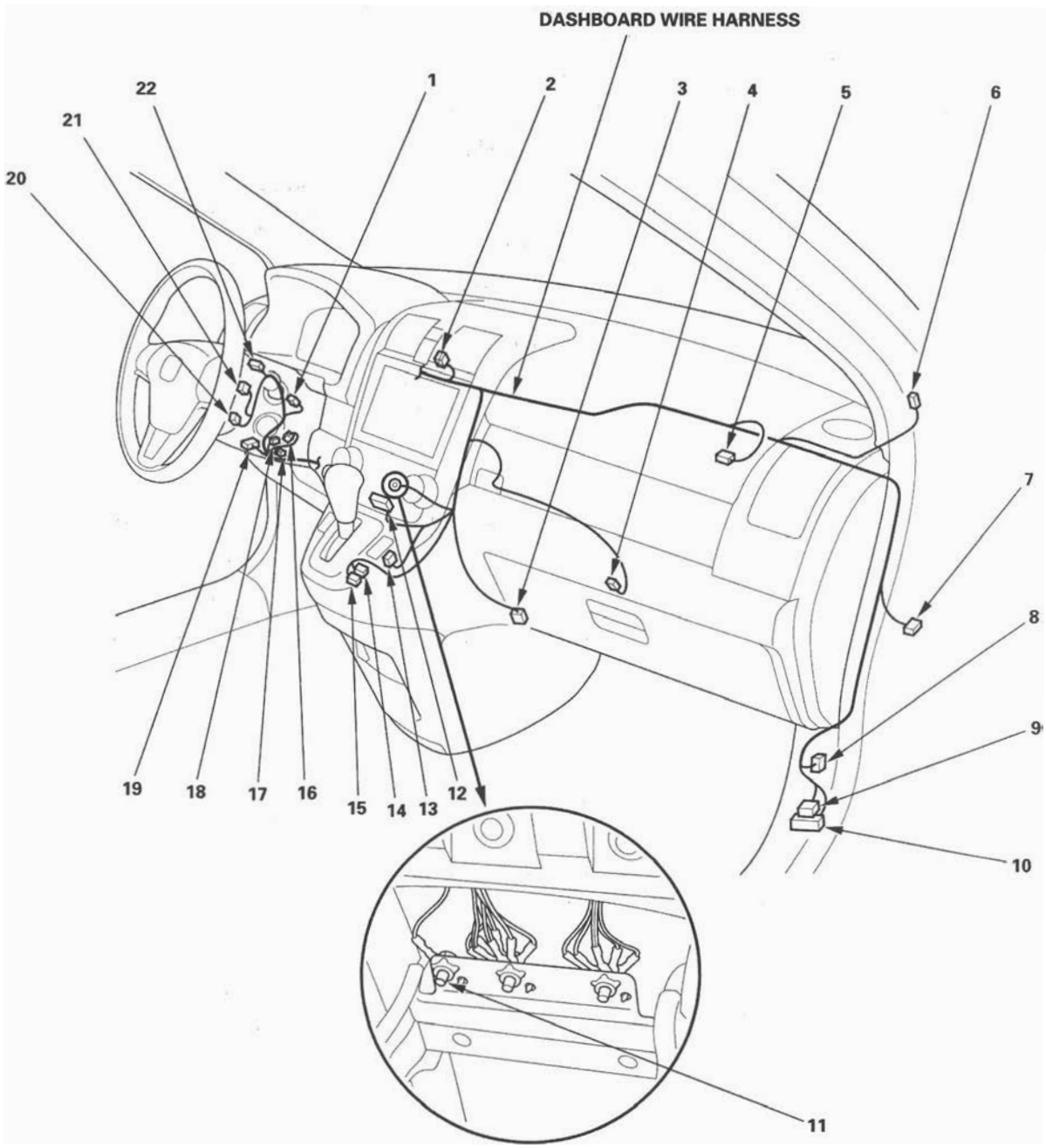
DASHBOARD WIRE HARNESS
1
2
3
4
5
6
7
8
9
10
11
12
13
14
15
16
17
18
19
20
21
22

Connector to Harness Index (cont'd)

Floor Wire Harness

Connector or Terminal	Ref	Cavities	Location	Connects to	Notes
Audio disc changer	6	13	Behind console box		EX-L
Driver's seat belt buckle switch	19	3	Under driver's seat		
Driver's seat belt buckle tensioner	18	4	Under driver's seat		
Driver's seat belt tensioner	20	4	Left B-pillar		
Driver's side airbag inflator	23	2	Under driver's seat		
Front passenger's door switch	8	1	Right B-pillar		
Front passenger's seat belt tensioner	10	4	Right B-pillar		
Left side impact sensor (B-pillar)	22	4	Left B-pillar		
Right side impact sensor (B-pillar)	11	4	Right B-pillar		
SRS unit connector A	2	28	Under middle of dash		
Subwoofer	12	6	Under front passenger's seat		* 3
Yaw rate-lateral acceleration sensor	1	4	Under middle of dash		
C506	3	18	Under middle of dash	Dashboard wire harness (see page 22-30)	
C507	25	20	Under middle of dash	Dashboard wire harness (see page 22-30)	
C508	4	12	Under right side of dash	Dashboard wire harness (see page 22-32)	* 4
C551	22	2	Under driver's seat	Driver's seat position sensor subharness (see page 22-50)	* 2
C552	21	8	Under driver's seat	Driver's seat heater subharness (see page 22-50)	* 1
C553	13	18	Under front passenger's seat	Front passenger's seat wire harness • With seat heater (see page 22-52) • Without seat heater (see page 22-53)	
C554	14	4	Under front passenger's seat	Front passenger's seat wire harness • With seat heater (see page 22-52) • Without seat heater (see page 22-53)	
C555	15	8	Under front passenger's seat	Table subharness (see page 22-49)	EX
C556	5	20	Behind console box	Console subharness (see page 22-48)	EX-L
C605	16	4	Under driver's seat	Side wire harness (see page 22-36)	
C606	17	4	Under driver's seat	Side wire harness (see page 22-36)	
C781	9	18	Right B-pillar	Right rear door wire harness (see page 22-47)	
G551	24		Under driver's seat	Body ground, via floor wire harness	
G552	7		Under front passenger's seat	Body ground, via floor wire harness	

* 1: With seat heater
* 2: Without seat heater
* 3: With navigation
* 4: With XM radio

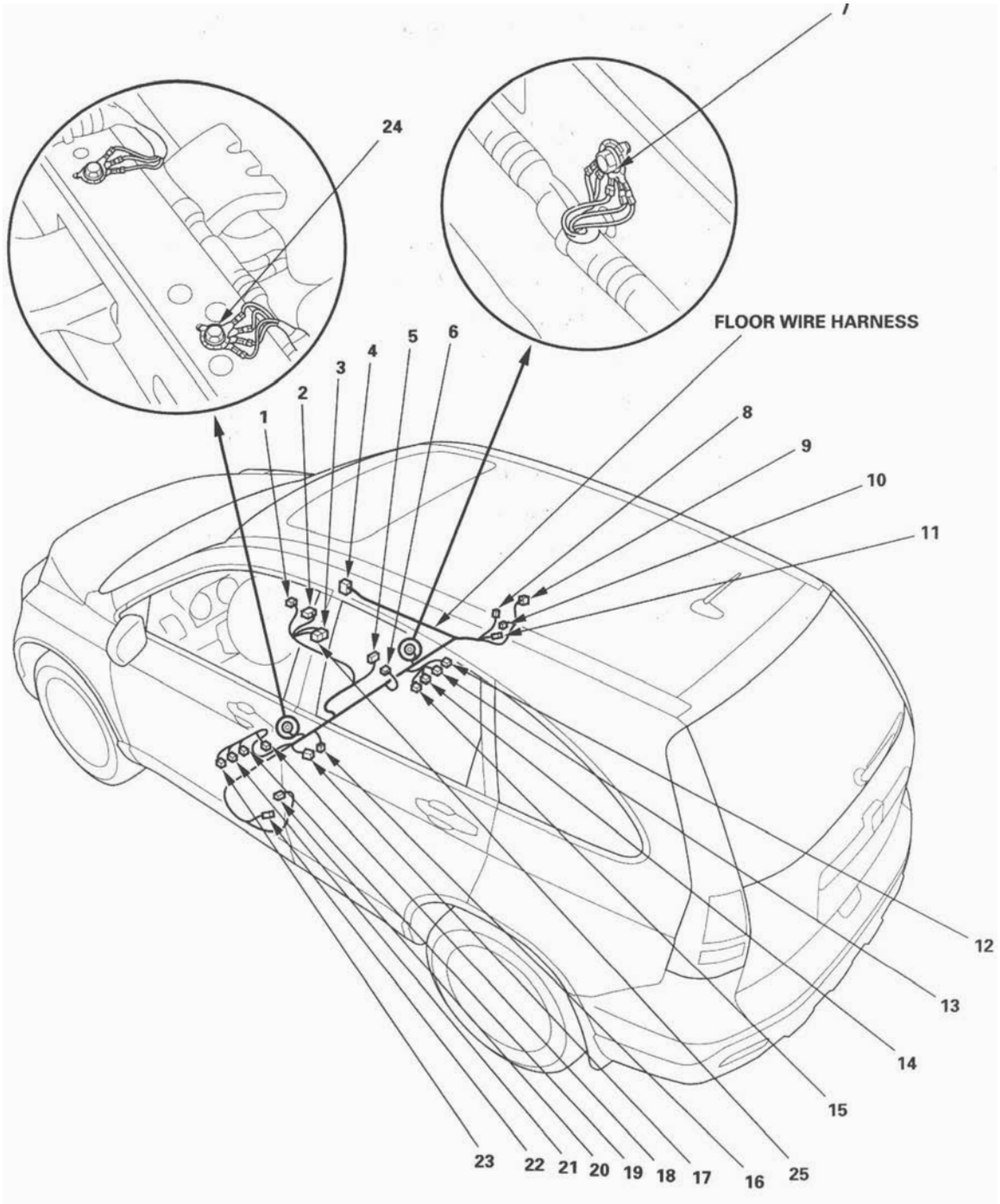
FLOOR WIRE HARNESS
1
2
3
4
5
6
7
8
9
10
11
12
13
14
15
16
17
18
19
20
21
22
23
24
25

Connector to Harness Index (cont'd)

Side Wire Harness (Left branch)

Connector or Terminal	Ref	Cavities	Location	Connects to	Notes
Cargo area accessory power socket	12	2	Left side of cargo area		
Driver's door switch	17	1	Left B-pillar		
Fuel tank unit	6	4	Fuel tank		
Left rear door switch	15	1	Left B-pillar		
Left rear wheel sensor	13	2	Left B-pillar		
Left side impact sensor	14	2	Left C-pillar		
Left side curtain airbag inflator	9	2	Left side of floor		
Left taillight	11	6	Left side of cargo area		
Under-dash fuse/relay box connector E (see page 22-57)	2	42	Left kick panel		
C401	19	12	Under left side of dash	Engine compartment wire harness (see page 22-22)	
C402	18	8	Under left side of dash	Engine compartment wire harness (see page 22-22)	
C601	1	18	Under left side of dash	Dashboard wire harness (see page 22-28)	
C602	3	16	Under left side of dash	Dashboard wire harness (see page 22-28)	
C603	7	18	Left D-pillar	Tailgate wire harness (see page 22-42)	
C604	8	2	Left D-pillar	Tailgate wire harness (see page 22-42)	
C605	5	4	Under driver's seat	Floor wire harness (see page 22-34)	
C606	4	4	Under driver's seat	Floor wire harness (see page 22-34)	
C771	16	18	Left C-pillar	Left rear door wire harness (see page 22-46)	
G602	9		Left side of cargo area	Body ground, via side wire harness	

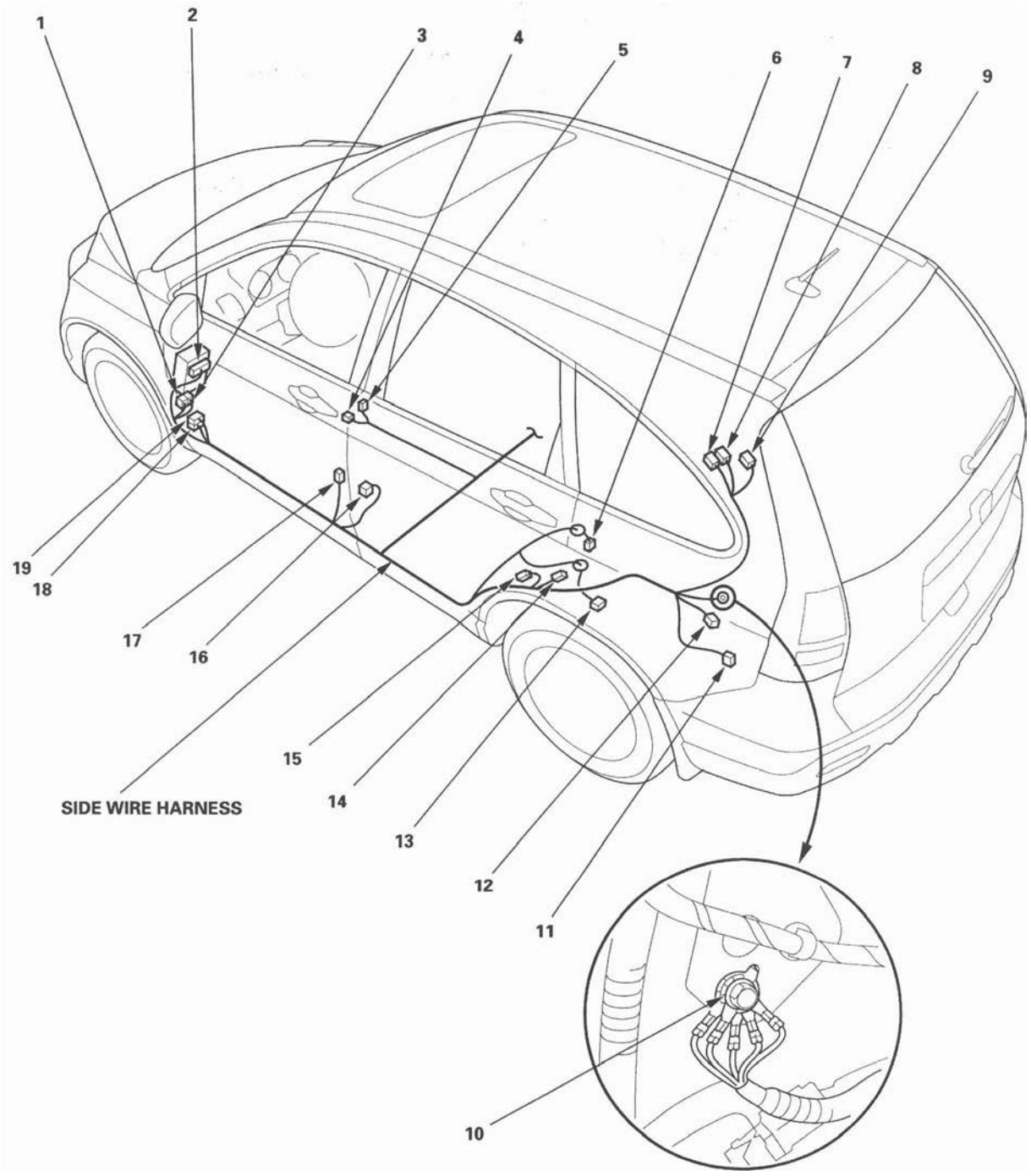
1
2
3
4
5
6
7
8
9
19
18
17
16
15
14
13
12
11
10
SIDE WIRE HARNESS

Connector to Harness Index (cont'd)

Side Wire Harness (Right branch)

Connector or Terminal	Ref	Cavities	Location	Connects to	Notes
Right rear door switch	1	1	Right C-pillar		
Right rear wheel sensor	2	2	Right side of floor		
Right side impact sensor	9	2	Right C-pillar		
Right side curtain airbag inflator	7	2	Right D-pillar		
Right taillight	3	6	Right side of cargo area		
C608	8	6	Under floor	Fuel tank subharness	
G601	4		Right side of cargo area	Body ground, via side wire harness	

Fuel Tank Subharness

Connector or Terminal	Ref	Cavities	Location	Connects to	Notes
EVAP canister vent shut valve	5	2	Fuel tank		
Fuel tank pressure (FTP) sensor	6	3	Fuel tank		
C608	8	6	Under floor	Side wire harness	

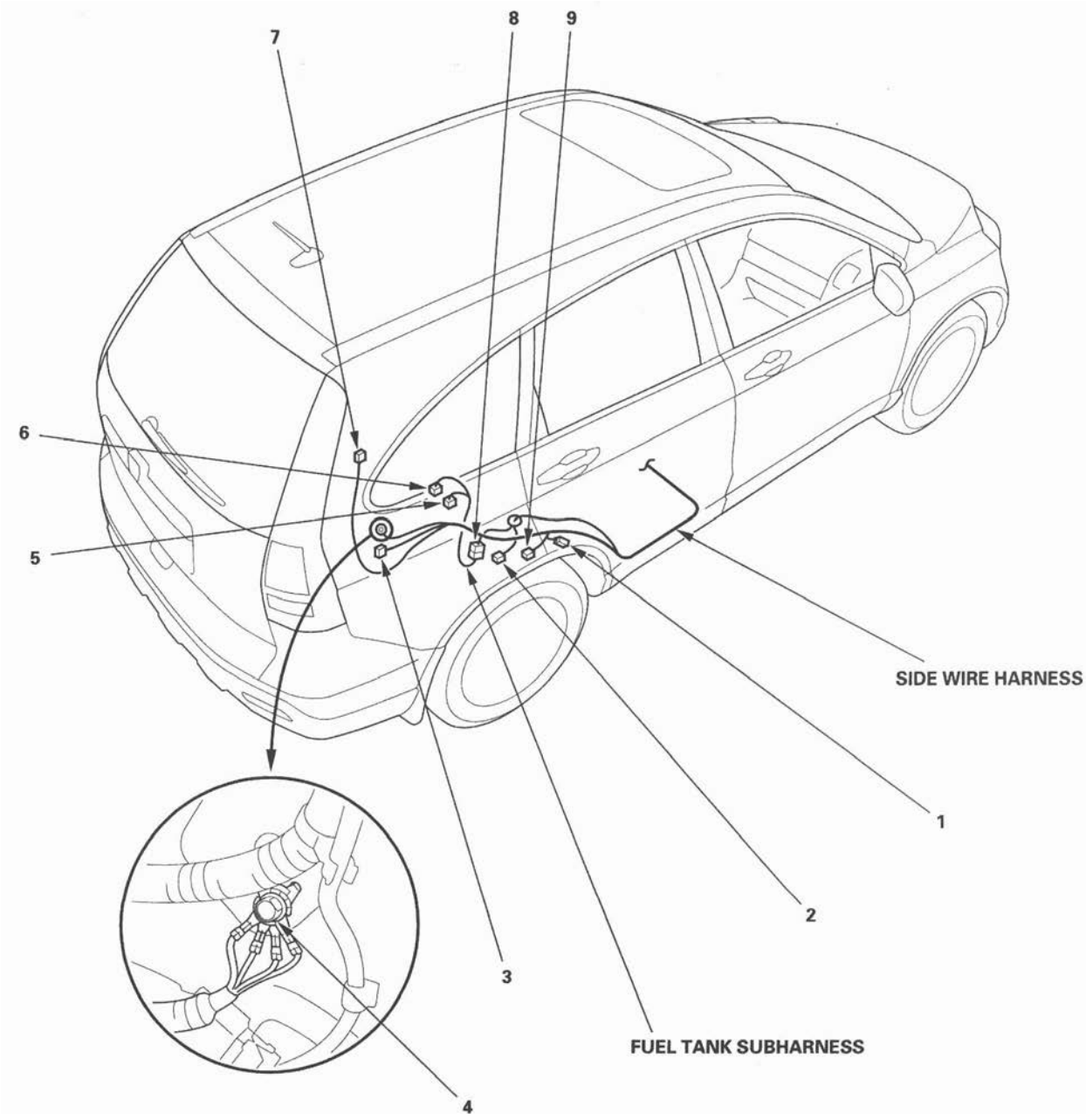
7
8
9
6
5
SIDE WIRE HARNESS
1
2
3
FUEL TANK SUBHARNESS
4

Connector to Harness Index (cont'd)

Roof Wire Harness

Connector or Terminal	Ref	Cavities	Location	Connects to	Notes
Ceiling light	2	3	Front of roof		
Map light	6	3	Middle of roof		
Microphone	5	3	Front of roof		Navigation
Moonroof control unit/motor	3	3	Rear of roof		Moonroof
Moonroof switch	1	10	Front of roof		Moonroof
C801	4	20	Under left side of dash	Dashboard wire harness (see page 22-28)	

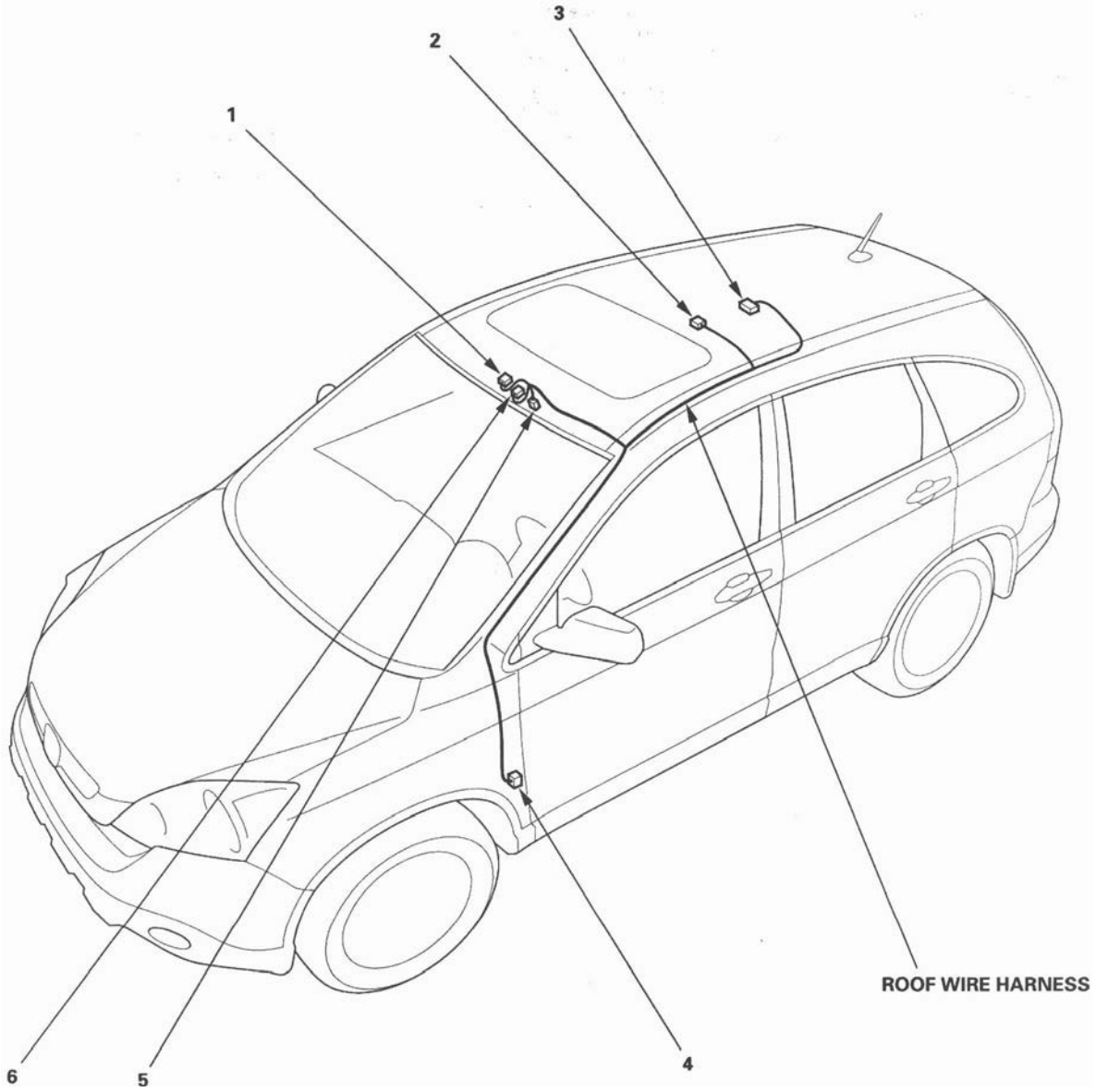
1
2
3
4
5
6
ROOF WIRE HARNESS

Connector to Harness Index (cont'd)

Tailgate Wire Harness

Connector or Terminal	Ref	Cavities	Location	Connects to	Notes
Cargo area light	1	3	Rear of roof		
High mount brake light	2	2	Behind high mount brake light		
License plate light	7	2	Middle of tailgate		
Rear window defogger terminal A (+)	3	1	Left side of rear window		
Rear window defogger terminal B (−)	4	1	Right side of rear window		
Rear window wiper motor	5	4	Middle of tailgate		
Rearview camera	6	6	Middle of tailgate		
Tailgate latch switch	9	2	Middle of tailgate		
Tailgate outer handle switch	10	2	Middle of tailgate		
Tailgate release actuator	8	2	Middle of tailgate		
C603	12	18	Left D-pillar	Side wire harness (see page 22-36)	
C604	11	2	Left D-pillar	Side wire harness (see page 22-36)	

*: With navigation

TAILGATE WIRE HARNESS

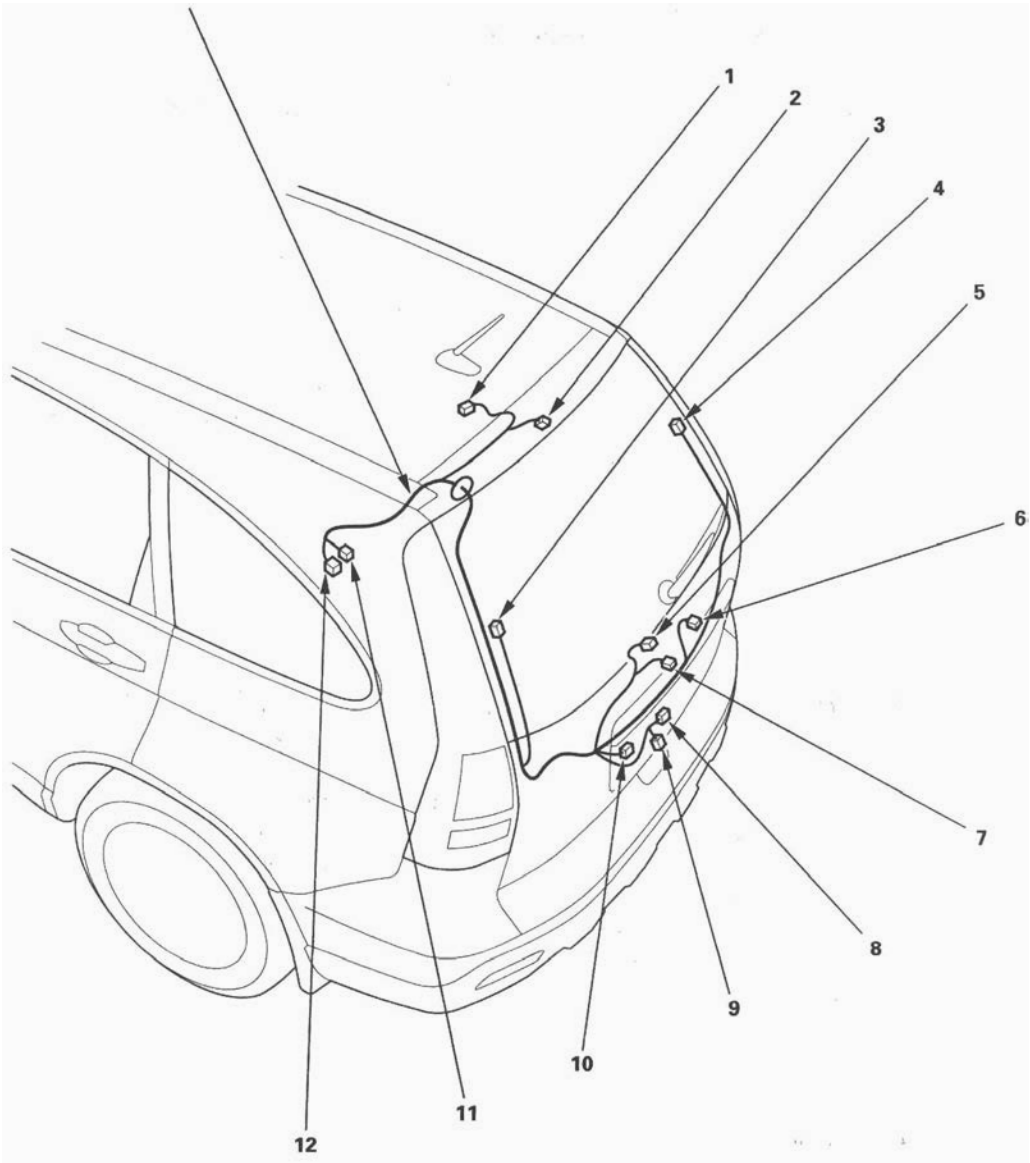

Connector to Harness Index (cont'd)

Driver's Door Wire Harness

Connector or Terminal	Ref	Cavities	Location	Connects to	Notes
Driver's door lock actuator/knob switch/key cylinder switch	1	10	Driver's door		
Driver's window motor	7	6	Driver's door		
Left front speaker	6	2	Driver's door		
Left power mirror	3	6	Driver's door		
Power window master switch/driver's door lock switch	2	22	Driver's door		
C751	5	18	Under left side of dash	Dashboard wire harness (see page 22-28)	
C752	4	23	Under left side of dash	Dashboard wire harness (see page 22-28)	

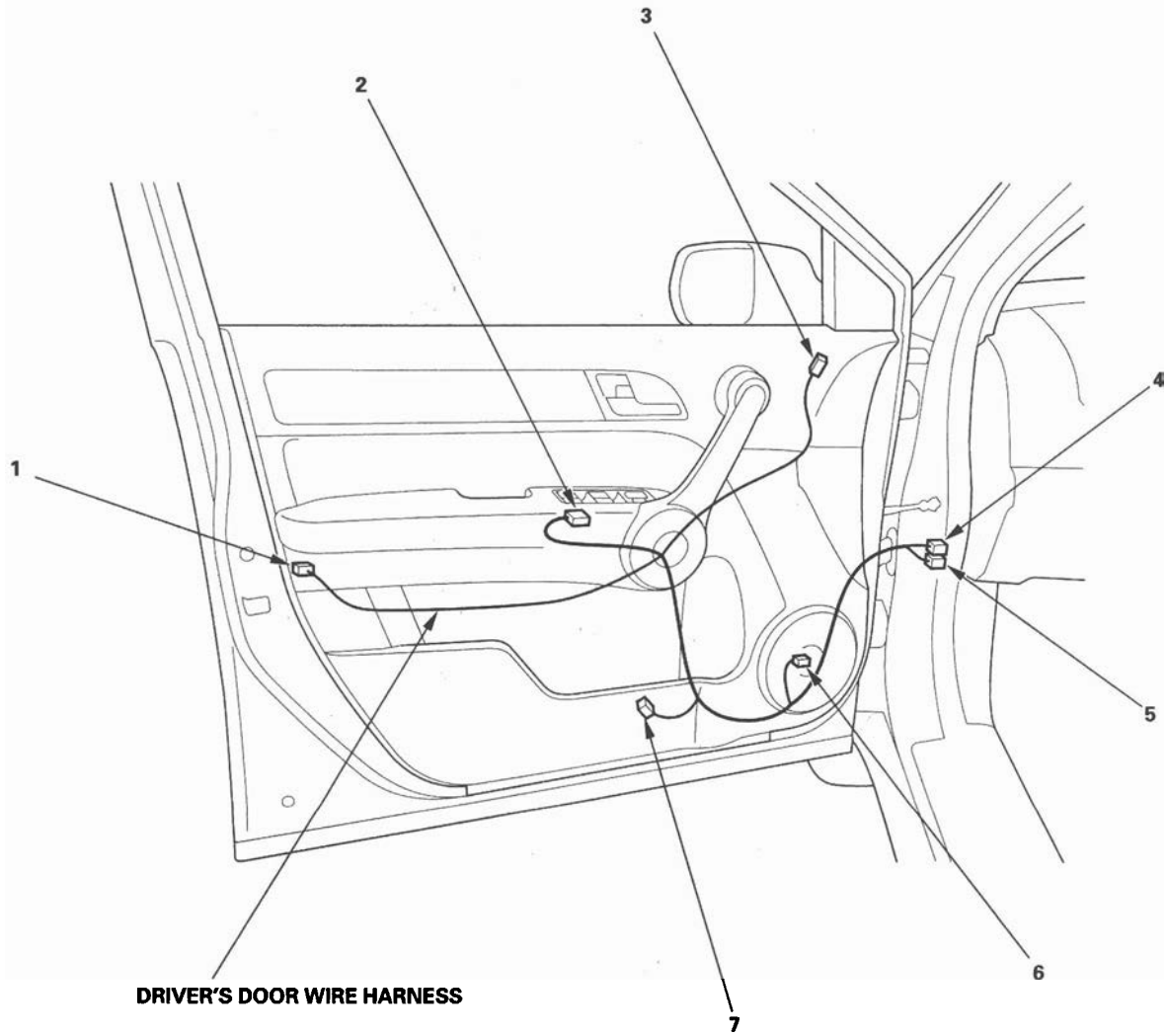

DRIVER'S DOOR WIRE HARNESS

Front Passenger's Door Wire Harness

Connector or Terminal	Ref	Cavities	Location	Connects to	Notes
Front passenger's door lock actuator/ knob switch	3	10	Front passenger's door		
Front passenger's window motor	4	2	Front passenger's door		
Front passenger's window switch	2	8	Front passenger's door		
Right front speaker	5	2	Front passenger's door		
Right power mirror	1	6	Front passenger's door		
C761	6	18	Under right side of dash	Dashboard wire harness (see page 22-32)	

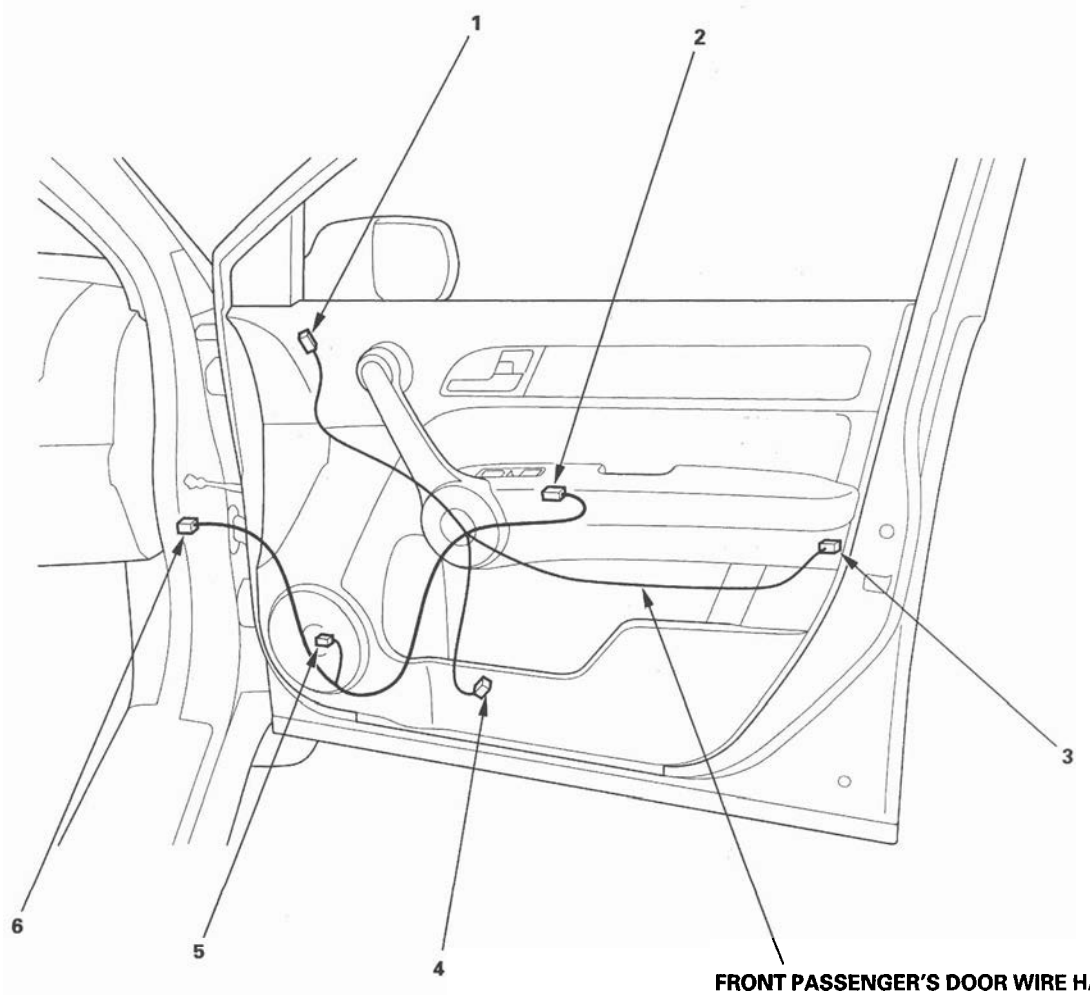

FRONT PASSENGER'S DOOR WIRE HARNESS

Connector to Harness Index (cont'd)

Left Rear Door Wire Harness

Connector or Terminal	Ref	Cavities	Location	Connects to	Notes
Left rear door lock actuator/knob switch	1	10	Left rear door		
Left rear speaker	4	2	Left rear door		
Left rear window motor	5	2	Left rear door		
Left rear window switch	2	8	Left rear door		
C771	3	18	Left B-pillar	Side wire harness (see page 22-36)	

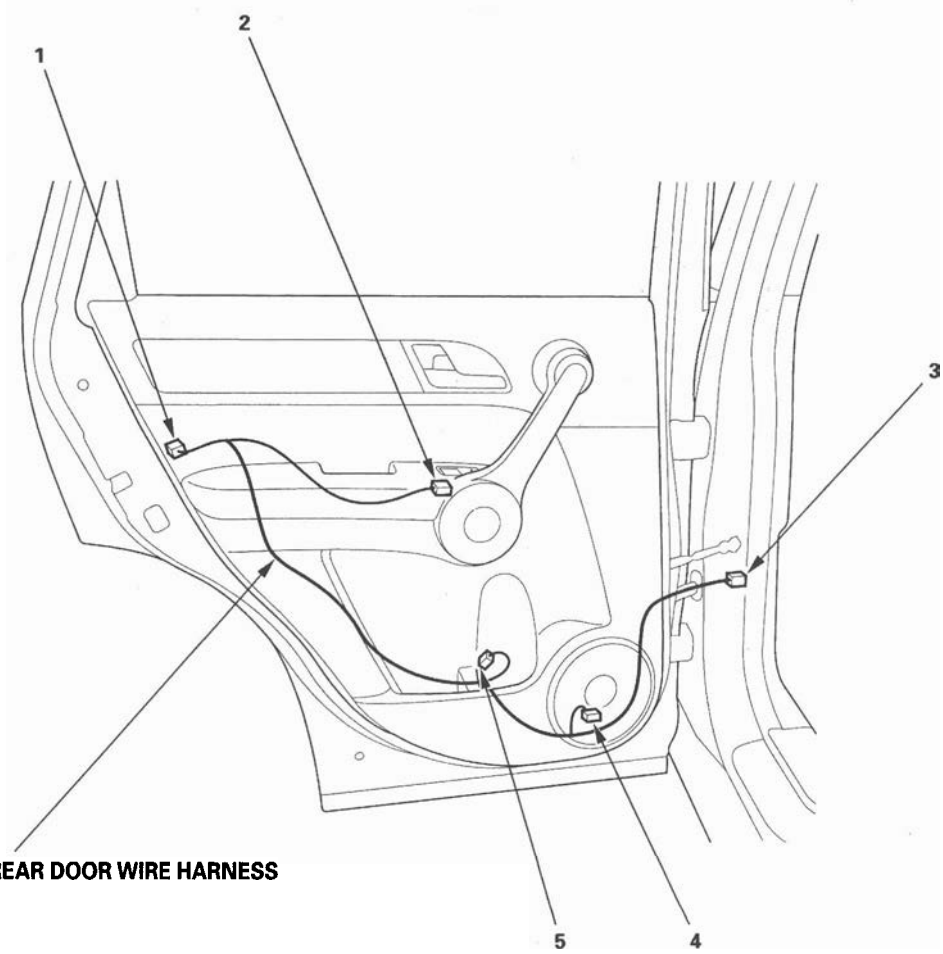

LEFT REAR DOOR WIRE HARNESS

Right Rear Door Wire Harness

Connector or Terminal	Ref	Cavities	Location	Connects to	Notes
Right rear door lock actuator/knob switch	3	10	Right rear door		
Right rear speaker	5	2	Right rear door		
Right rear window motor	4	2	Right rear door		
Right rear window switch	2	8	Right rear door		
C781	1	18	Right B-pillar	Floor wire harness (see page 22-34)	

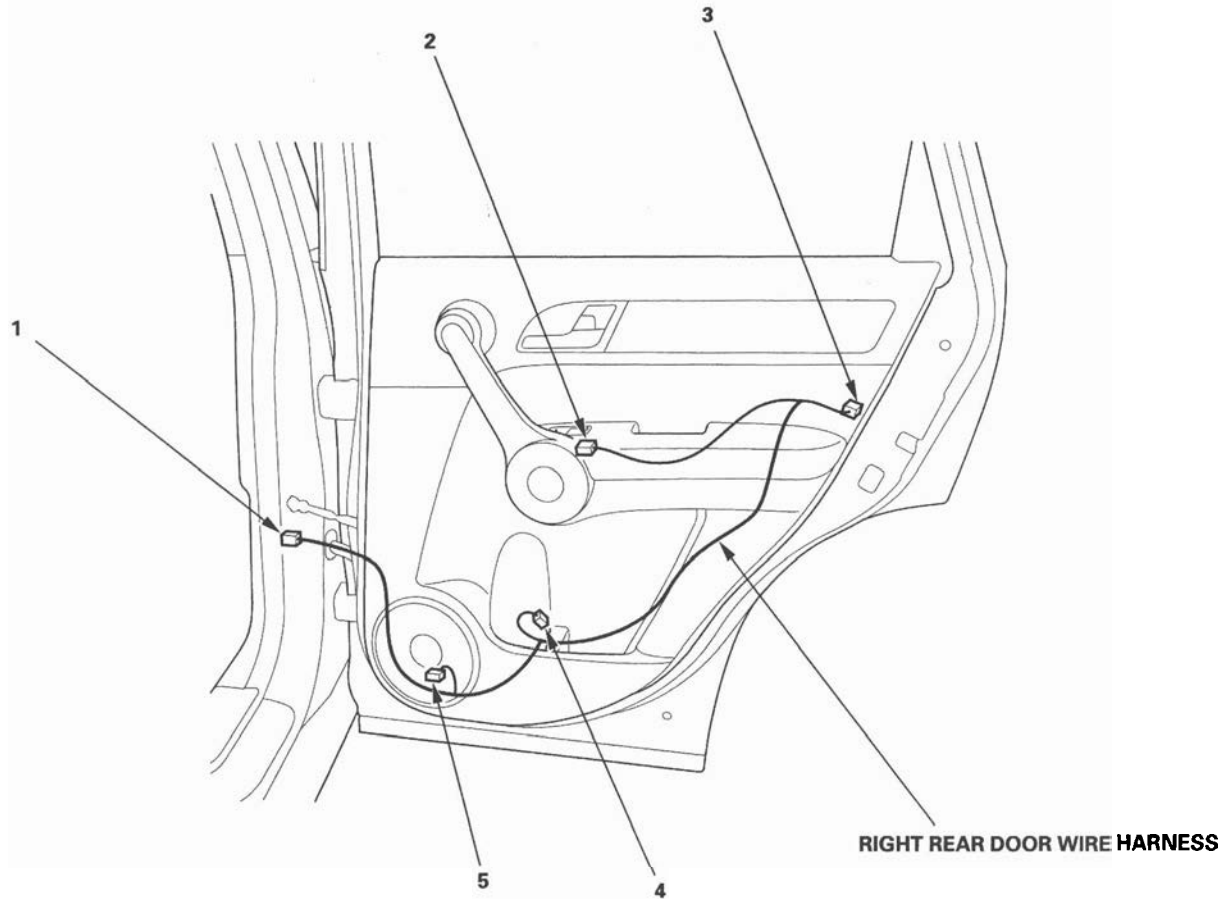

Connector to Harness Index (cont'd)

Console Subharness (EX-L only)

Connector or Terminal	Ref	Cavities	Location	Connects to	Notes
Auxiliary jack assembly	3	5	Under console		
Console accessory power socket	2	2	Under console		
C556	1	20	Under middle of dash	Floor wire harness (see page 22-34)	

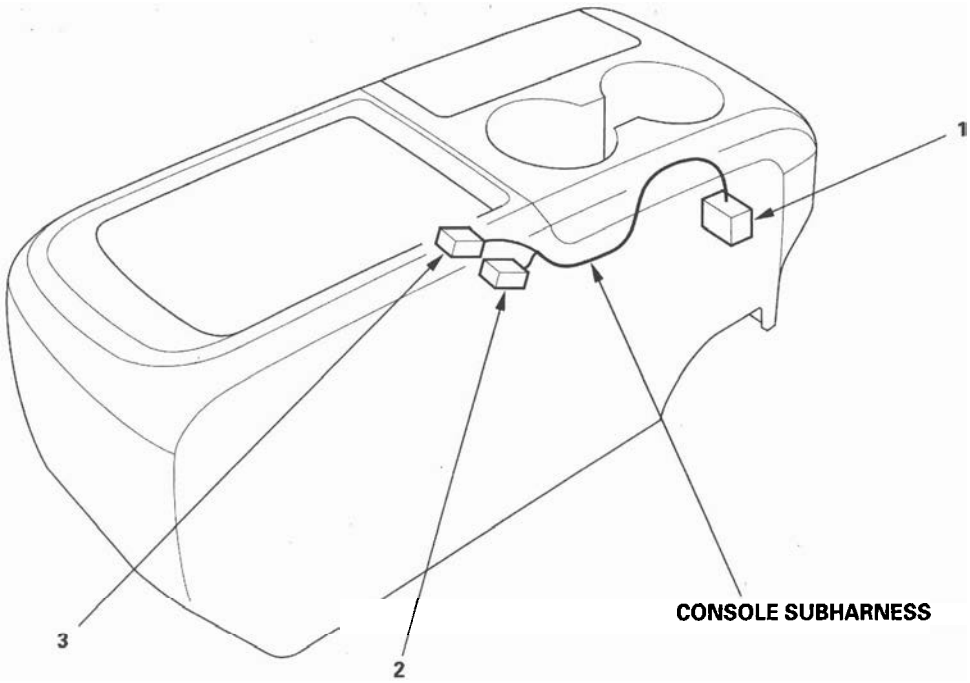

Table Subharness (EX only)

Connector or Terminal	Ref	Cavities	Location	Connects to	Notes
Auxiliary jack assembly	1	5	Under table		
Console accessory power socket	2	2	Under table		
C555	3	8	Under front passenger's seat	Floor wire harness (see page 22-34)	

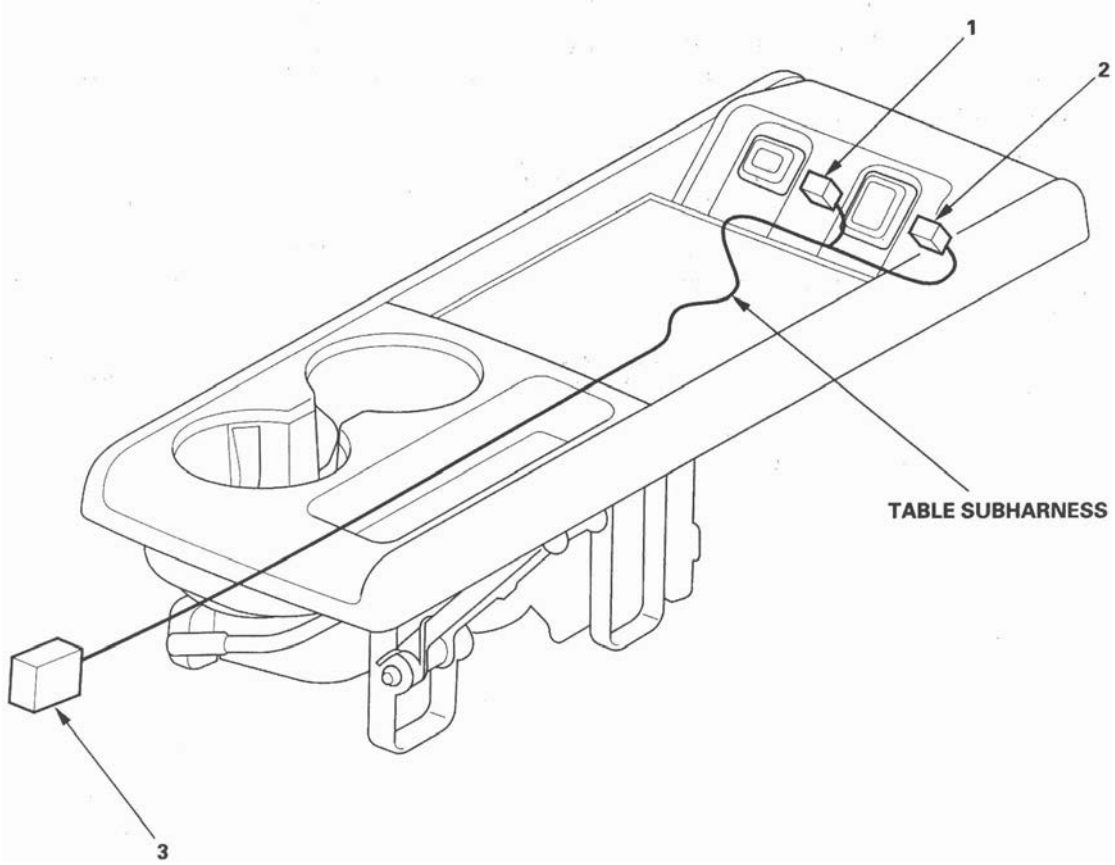

Connector to Harness Index (cont'd)

Driver's Seat Heater Subharness (With Seat Heater)

Connector or Terminal	Ref	Cavities	Location	Connects to	Notes
Driver's seat heater	3	3	Under driver's seat		
Driver's seat heater relay holder	5	——	Under driver's seat	Seat heater HIGH relay and seat heater LOW relay	
C551	1	2	Under driver's seat	Driver's seat position sensor harness	
C552	4	8	Under driver's seat	Floor wire harness (see page 22-34)	

Driver's Seat Position Sensor Harness

Connector or Terminal	Ref	Cavities	Location	Connects to	Notes
Driver's seat position sensor	2	2	Under driver's seat		
C551	1	2	Under driver's seat	Driver's seat heater subharness	* 1
C551	1	2	Under driver's seat	Floor wire harness (see page 22-34)	* 2

* 1: With seat heater
* 2: Without seat heater

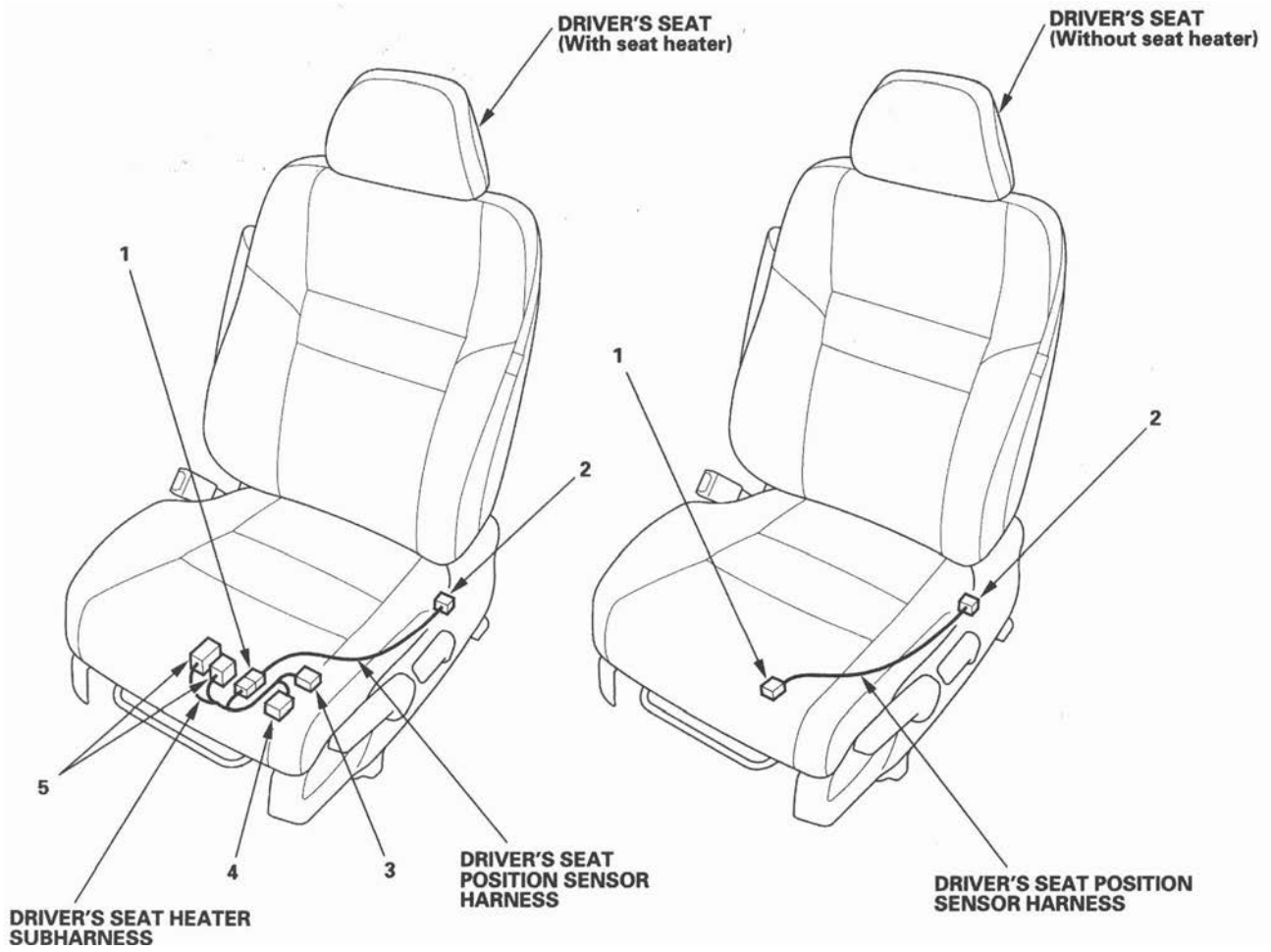

ODS Unit Harness

Connector or Terminal	Ref	Cavities	Location	Connects to	Notes
Front inner seat weight sensor	3	3	Left side of front passenger's seat		
Front outer seat weight sensor	5	3	Right side of front passenger's seat		
Rear inner seat weight sensor	2	3	Left side of front passenger's seat		
Rear outer seat weight sensor	6	3	Right side of front passenger's seat		
ODS unit	1	18	Left side of front passenger's seat		
C557	4	4	Under front passenger's seat	Front passenger's seat subharness (see page 22-52)	* 1
C557	4	4	Under front passenger's seat	Front passenger's seat subharness (see page 22-53)	* 2

* 1: With seat heater
* 2: Without seat heater

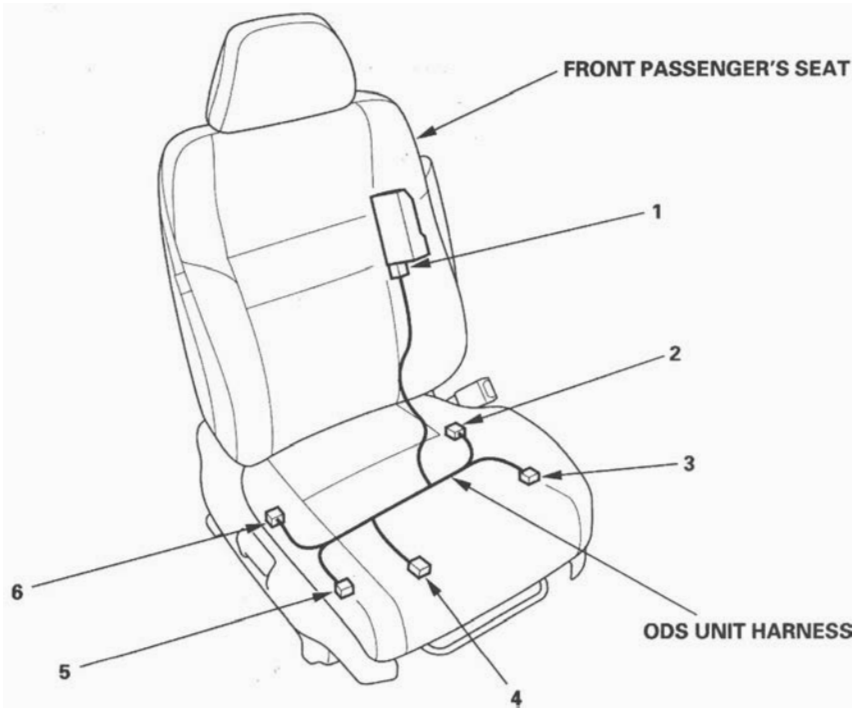

Connector to Harness Index (cont'd)

Front Passenger's Seat Subharness (With Seat Heater)

Connector or Terminal	Ref	Cavities	Location	Connects to	Notes
Front passenger's seat belt buckle switch	3	3	Under front passenger's seat		
Front passenger's seat belt buckle tensioner	4	4	Under front passenger's seat		
Front passenger's side airbag inflator	9	2	Under front passenger's seat		
C553	5	18	Under front passenger's seat	Floor wire harness (see page 22-34)	
C554	6	4	Under front passenger's seat	Floor wire harness (see page 22-34)	
C558	1	8	Under front passenger's seat	Front passenger's seat heater subharness	

Front Passenger's Seat Heater Subharness (With Seat Heater)

Connector or Terminal	Ref	Cavities	Location	Connects to	Notes
Front passenger's seat cushion heater	8	3	Under front passenger's seat		
Front passenger's seat heater relay holder	2	——	Under front passenger's seat	Seat heater HIGH relay and seat heater LOW relay	
C557	7	4	Under front passenger's seat	ODS unit harness (see page 22-51)	
C558	1	8	Under front passenger's seat	Front passenger's seat subharness	

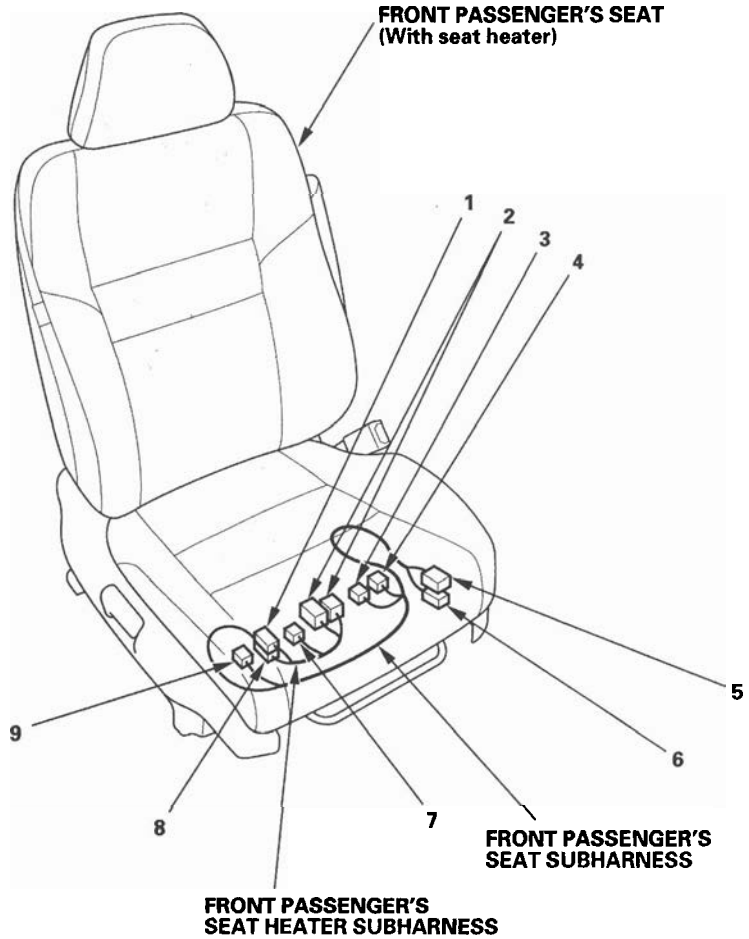

Front Passenger's Seat Subharness (Without Seat Heater)

Connector or Terminal	Ref	Cavities	Location	Connects to	Notes
Front passenger's seat belt buckle switch	4	3	Under front passenger's seat		
Front passenger's seat belt buckle tensioner	3	4	Under front passenger's seat		
Front passenger's side airbag inflator	6	2	Under front passenger's seat		
C553	1	18	Under front passenger's seat	Floor wire harness (see page 22-34)	
C554	2	4	Under front passenger's seat	Floor wire harness (see page 22-34)	
C557	5	4	Under front passenger's seat	ODS unit harness (see page 22-51)	

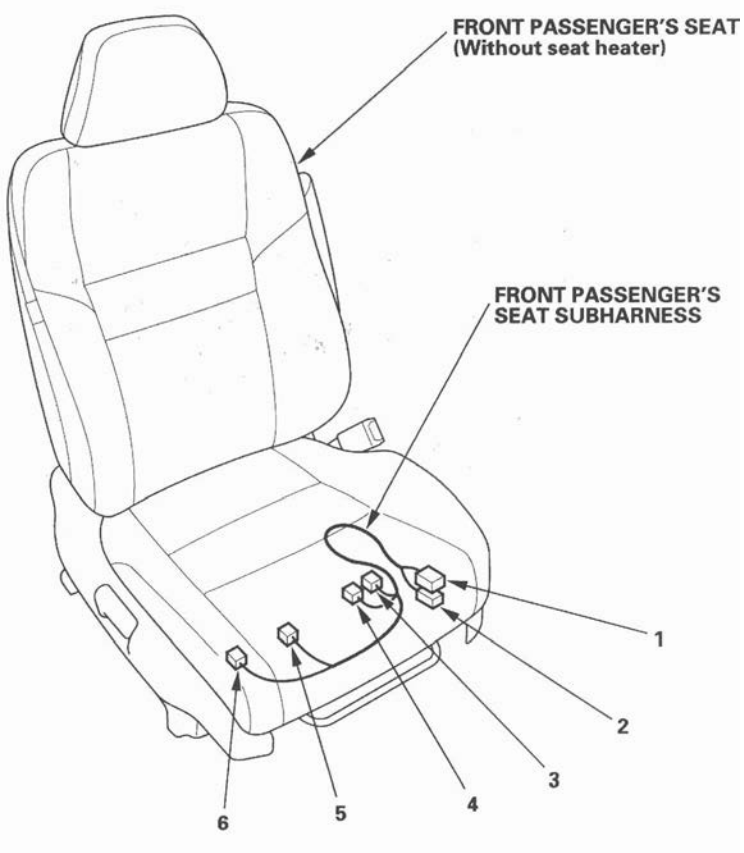

Connector to Harness Index (cont'd)

Cable Reel Subharness

Connector or Terminal	Ref	Cavities	Location	Connects to	Notes
Audio remote switch	5	12	Steering wheel		
Cable reel connector C	1	20	Steering wheel		
Cruise control set/resume/cancel switch	2	12	Steering wheel		
Horn switch positive terminal	3	1	Steering wheel		
Voice control switch	4	5	Steering wheel		*

*: With navigation

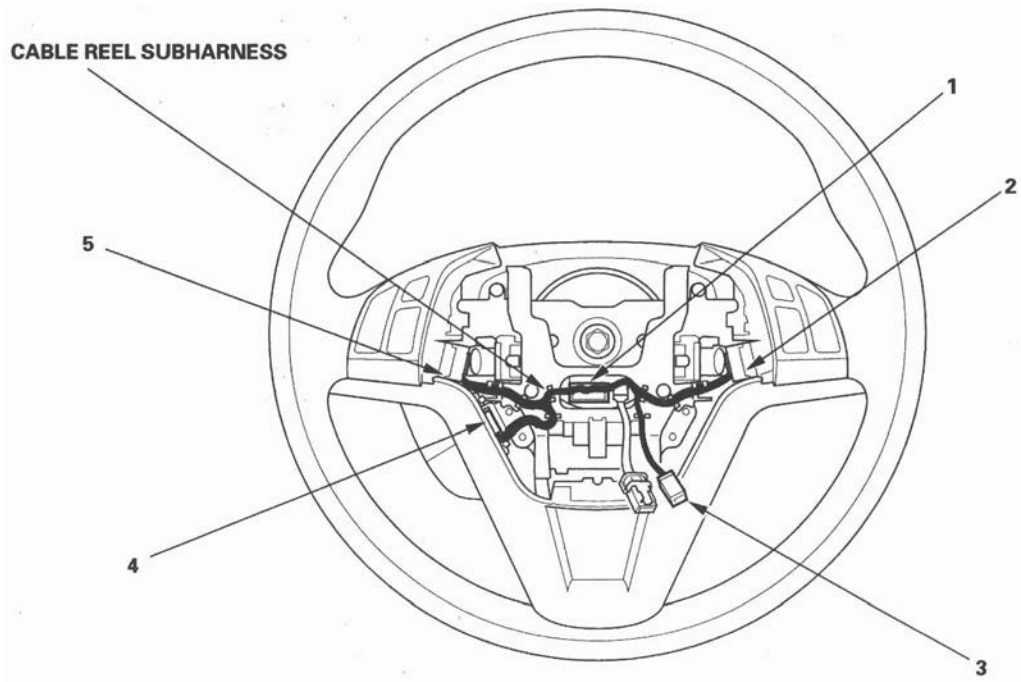

A/C Wire Harness

Connector or Terminal	Ref	Cavities	Location	Connects to	Notes
Air mix control motor	1	7	Under left side of dash		
Blower motor	7	2	Under right side of dash		
Evaporator temperature sensor	5	2	Under middle of dash		
Mode control motor	4	7	Behind glove box		
Power transistor	3	4	Under right side of dash		
Recirculation control motor	6	7	Behind glove box		
C403	2	2	Under left side of dash	Engine compartment wire harness (see page 22-22)	
C505	8	24	Behind left side of glove box	Dashboard wire harness (see page 22-32)	

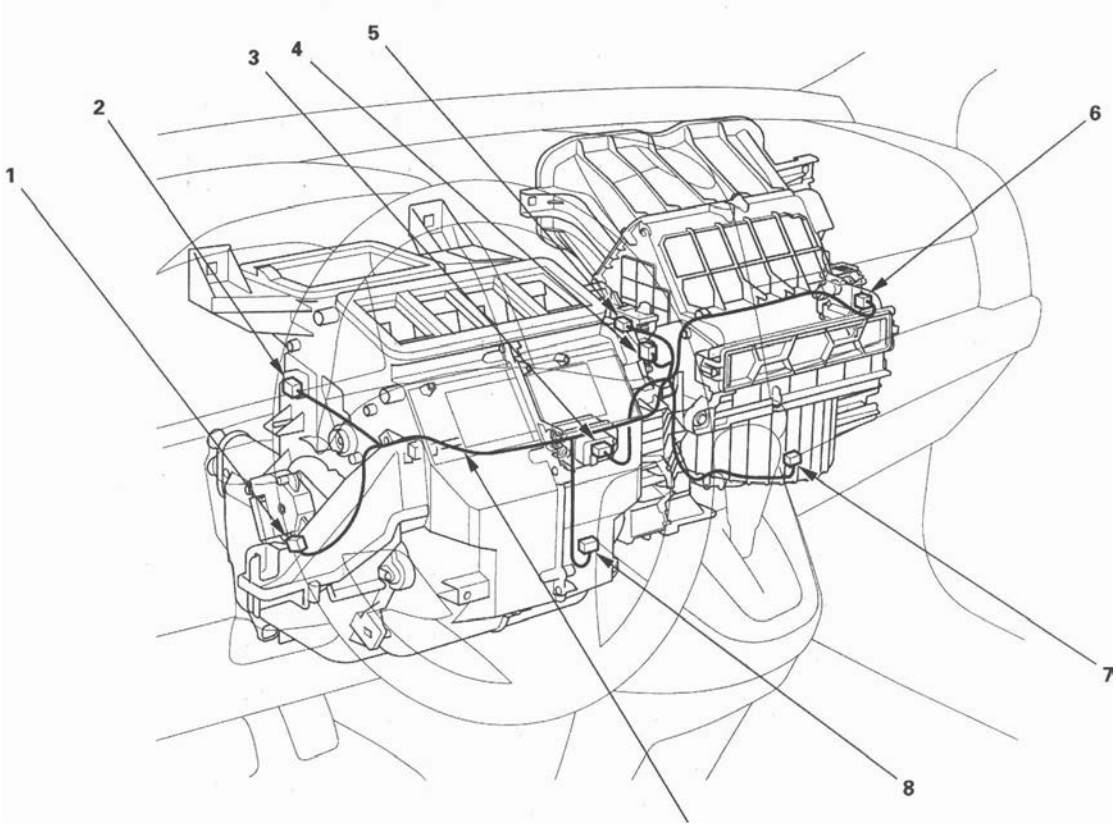

A/C WIRE HARNESS

Connector to Fuse/Relay Box Index

Under-hood Fuse/Relay Box

Socket	Ref	Terminal	Connects to	Notes
A (ELD unit)	21	3	Engine compartment wire harness (see page 22-22)	
A/C compressor clutch relay	12	4		
A/C condenser fan relay	3	4		
B	22	1	Not used	
Blower motor relay	2	4		
C	23	2	Engine compartment wire harness (see page 22-22)	
D	25	8	Engine compartment wire harness (see page 22-22)	
Diode (for A/C condenser fan)	9	———		
Diode (for radiator fan)	8	———		
E	24	10	Engine compartment wire harness (see page 22-22)	
Electronic throttle control system (ETCS) control relay	14	4		
F	17	20	Engine compartment wire harness (see page 22-22)	
Fan control relay	4	5		
G	19	1	Engine compartment wire harness (see page 22-22)	
H	20	1	Engine compartment wire harness (see page 22-22)	
Ignition coil relay	7	4		
J	16	4	Engine compartment wire harness (see page 22-22)	
K	18	2	Engine compartment wire harness (see page 22-22)	
PGM-FI main relay (FI MAIN)	13	4		
PGM-FI subrelay	6	4		
Radiator fan relay	15	4		
Rear window defogger relay	1	4		
Rear window wiper motor relay	5	5		
T1	10		Starter subharness (see page 22-14)	
T101	11		Alternator, via starter subharness (see page 22-14)	

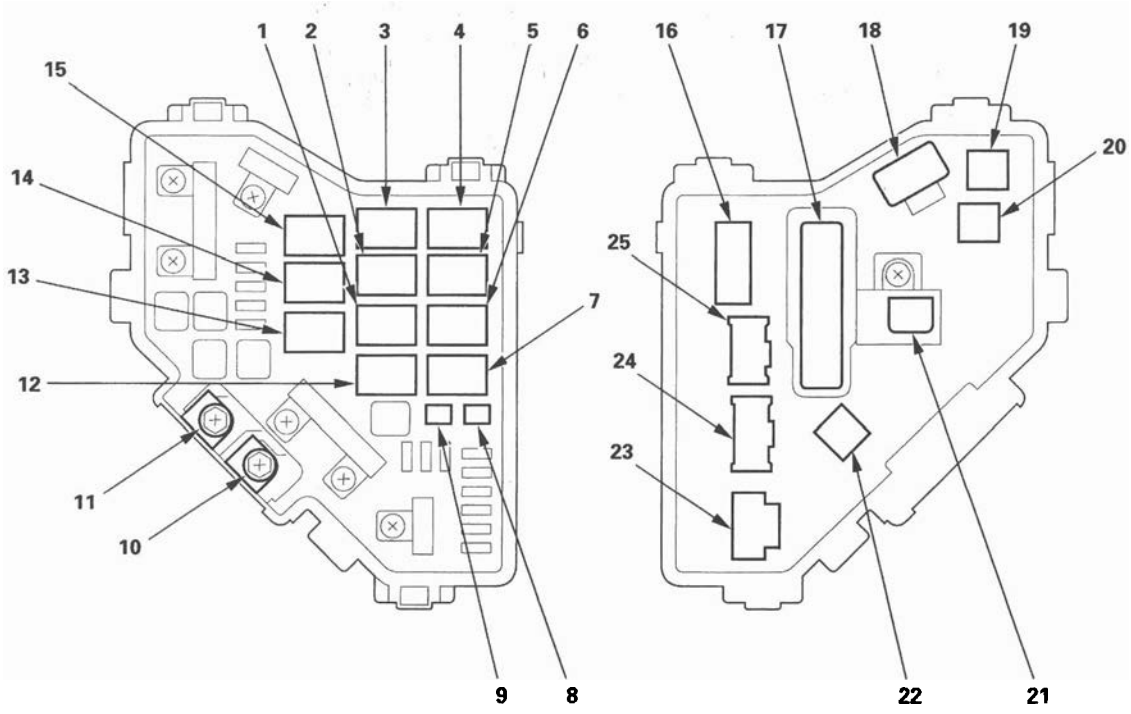

(View of front side)

(View of back side)

Under-dash Fuse/Relay Box

Socket	Ref	Terminal	Connects to	Notes
A (Optional connector)	9	6	Not used	
C	10	4	Dashboard wire harness (see page 22-28)	
D	4	2	Dashboard wire harness (see page 22-28)	
E	5	42	Floor wire harness (see page 22-34)	
F	6	34	Engine compartment wire harness (see page 22-22)	
G	7	21	Engine compartment wire harness (see page 22-22)	
H (MICU service check connector)	8	3		
J	20	4	Dashboard wire harness (see page 22-28)	
K	12	8	Dashboard wire harness (see page 22-28)	
M	13	10	Dashboard wire harness (see page 22-28)	
Memory erase signal (MES) connector socket	11	———		
N	14	14	Dashboard wire harness (see page 22-28)	
P	19	10	Dashboard wire harness (see page 22-28)	
PGM-FI main relay 2 (FUEL PUMP)	2	4		
Power window relay	1	4		
Q	17	16	Dashboard wire harness (see page 22-28)	
R	15	20	Dashboard wire harness (see page 22-28)	
Starter cut relay	3	4		
S	16	20	Dashboard wire harness (see page 22-28)	
T	18	34	Dashboard wire harness (see page 22-28)	

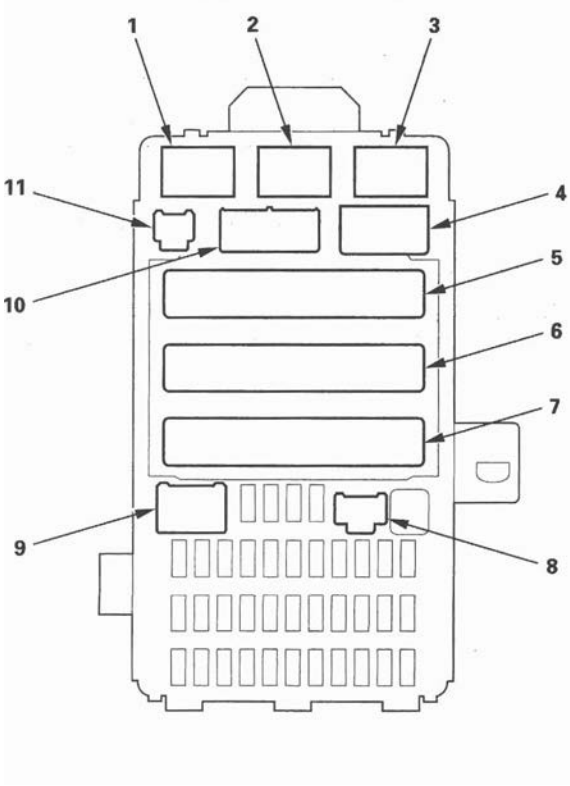

(View of front side)

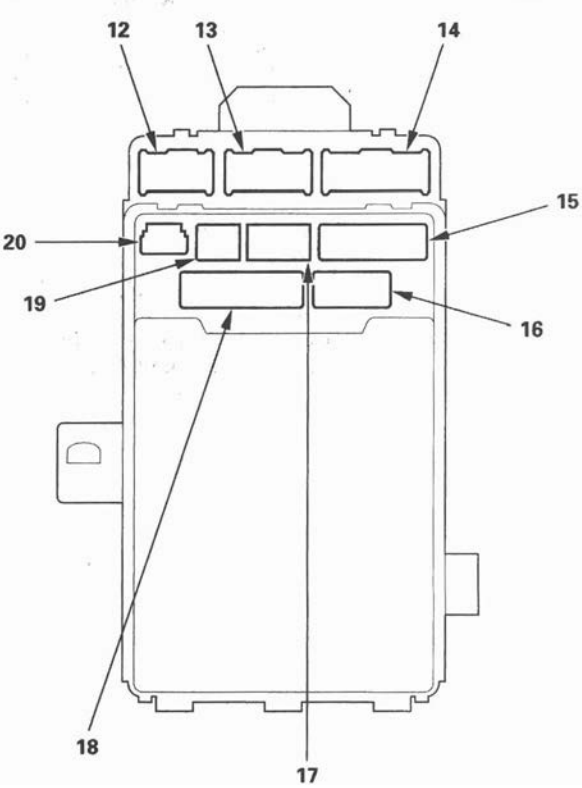

(View of back side)

Fuse to Components Index

Under-hood Fuse/Relay Box

Fuse Number	Amps	Component(s) or Circuit(s) Protected
1	100 A (BAT)	Battery, Power distribution
	70 A (EPS)	Not used
2	50 A (IG)	Ignition switch
	80 A (OPTION)	No. 5, No. 6, No. 7, No. 27, No. 28, No. 29, and No. 31 fuses (in the under-dash fuse/relay box)
3	40 A (VSA MTR)	VSA modulator-control unit
	20 A (VSA FSR)	VSA modulator-control unit
4	50 A (H/L)	No. 18, No. 19, No. 20, and No. 21 fuses (in the under-dash fuse/relay box)
	40 A (P/W)	No. 24, No. 25, No. 26, No. 30, No. 32, and No. 33 fuses (in the under-dash fuse/relay box)
5	———	Not used
6	20 A	A/C condenser fan motor (via A/C condenser fan relay)
7	20 A	Radiator fan motor (via radiator fan relay)
8	30 A	Rear window defogger (via rear window defogger relay)
9	40 A	Blower motor (via blower motor relay)
10	15 A	Hazard lights
11	15 A	A/F sensor (Sensor 1), PCM
12	15 A	Brake lights, PCM, Horn, MICU
13	———	Not used
14	———	Not used
15	7.5 A	A/C condenser fan relay
16	———	Not used
17	15 A	Subwoofer
18	15 A	Ignition coils, PCM
19	15 A	CKP sensor, CMP sensor B, PCM, ETCS control relay, Injectors, PGM-FI main relay 1 (FI MAIN), PGM-FI main relay 2 (FUEL PUMP)
20	7.5 A	A/C compressor clutch (via A/C compressor clutch relay)
21	15 A	PCM (via ETCS control relay)
22	7.5 A	Cargo area light, Ceiling light, Ignition key light, Map light, Vanity mirror light
23	10 A	Audio unit, Data link connector, Gauge control module, Hazard warning switch, Immobilizer-keyless control unit, MICU, Audio unit/Navigation unit

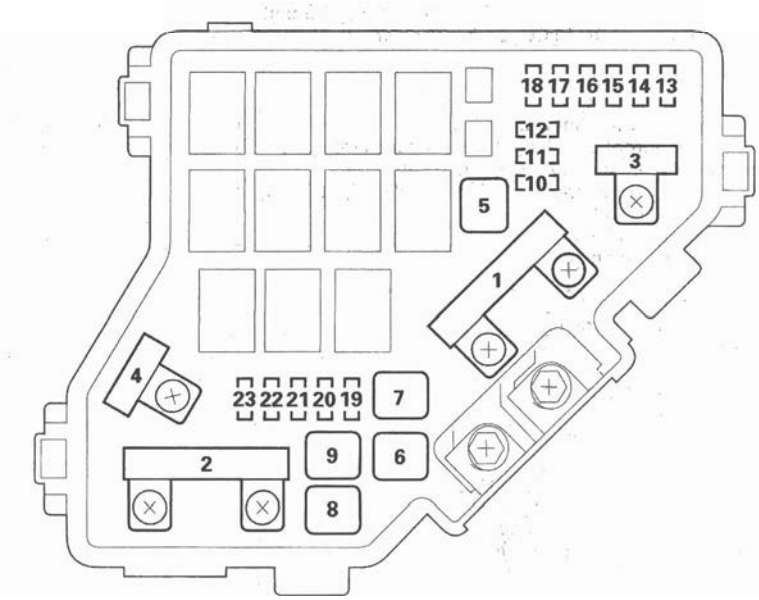

(cont'd)

Fuse to Components Index (cont'd)

Under-dash Fuse/Relay Box

Fuse Number	Amps	Amps Component(s) or Circuit(s) Protected
1	7.5 A	Moonroof control unit/motor
2	15 A	Immobilizer-keyless control unit, PCM, PGM-FI main relay 2
3	10 A	Alternator, ELD unit, EVAP canister purge valve, EVAP canister vent shut valve, MAF sensor, PCM
4	7.5 A	VSA modulator-control unit, Yaw rate-lateral acceleration sensor
5	15 A	Seat heaters
6	20 A	Not used (optional fog lights)
7	—	Not used
8	10 A	Rear window wiper motor (via relay)
9	7.5 A	ODS unit, Passenger's airbag CUTOFF indicator, SRS unit
10	7.5 A	Gauge control module, MICU, Shift lock solenoid, TPMS control unit
11	10 A	SRS unit
12	10 A	Right headlight (high beam)
13	10 A	Left headlight (high beam)
14	7.5 A	Audio unit light, Dash lights brightness controller, Glove box light, Hazard warning switch light, HVAC control unit light, Moonroof switch light, Passenger's airbag CUTOFF indicator light, Power mirror switch light, Steering wheel switches lights, VSA OFF switch light
15	7.5 A	Front side marker/parking lights, License plate light, Taillights
16	10 A	Right headlight (low beam)
17	10 A	Left headlight (low beam)
18	20 A	MICU (headlight-high beam)
19	15 A	MICU (parking lights)
20	7.5 A	TPMS control unit
21	20 A	MICU (headlight-low beam)
22	—	Not used
23	—	Not used
24	20 A	Moonroof control unit/motor
25	20 A	MICU (door locks)
26	20 A	Power window master switch
27	—	Not used
28	15 A	Cargo area accessory power socket relay
29	15 A	Front accessory power socket relay
30	20 A	Front passenger's power window motor
31	15 A	Console accessory power socket relay
32	20 A	Right rear power window motor
33	20 A	Left rear power window motor
34	7.5 A	Accessory power socket relays (Front, Console, and Cargo area), Audio unit, HandsFreeLink control unit
35	7.5 A	Key interlock solenoid, MICU
36	10 A	HVAC control unit, Power mirror defogger relay, Recirculation control motor, Under-hood fuse/relay box (A/C compressor clutch relay, Blower motor relay, Power mirror defogger relay, Rear window defogger relay), Fan control relay and radiator fan relay (via A/C diode), Seat heaters
37	7.5 A	MICU (DRL)
38	30 A	MICU (windshield wiper)

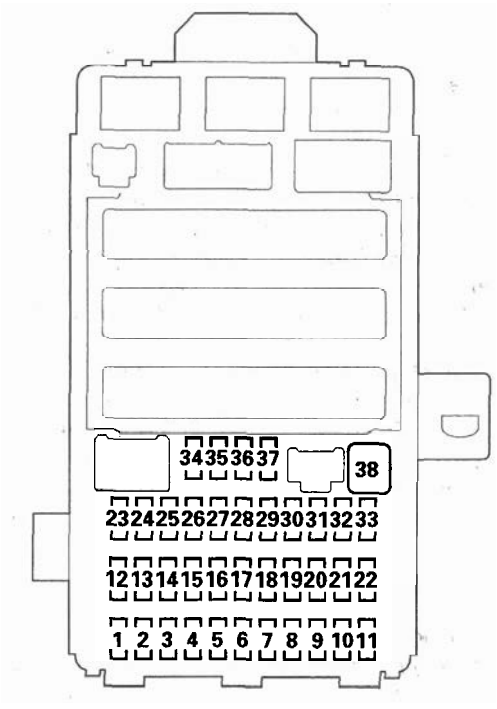
34 35 36 37
38
23 24 25 26 27 28 29 30 31 32 33
12 13 14 15 16 17 18 19 20 21 22
1 2 3 4 5 6 7 8 9 10 11

Ground Distribution

Ground to Components Index

Ground	Component or circuit grounded
G1	Battery
G2	Engine
G101	BLK: A/T clutch pressure control solenoid valves A, B, C, PCM, EGR valve, PCM, Transmission range switch, VTC oil control solenoid valve BRN: Data link connector, Immobilizer-keyless control unit BRN/YEL: PCM
G201	Washer fluid level switch (Canada models)
G202	VSA modulator-control unit
G301	A/C condenser fan relay, Front side marker/parking lights, Front turn signal lights, Headlights, Hood switch
G302	Blower motor relay, ELD unit, Fan control relay, Power mirror defogger relay, Rear window wiper motor relay, Windshield wiper motor
G401	Brake fluid level switch, MICU, Power steering pressure (PSP) switch, Power transistor, (G401 connects to G601 via under-dash fuse/relay box)
G501	Cable reel (steering wheel switches ground), Driver's door lock knob switch/key cylinder switch, Gauge control module (2 wires), Ignition key switch, Left power mirror defogger, Moonroof switch, Moonroof control unit/motor, Power mirror switch, Power window master switch (including driver's door lock switch), Vanity mirror lights, VSA OFF switch
G502	Accessory power socket relays (Front, Console, and Cargo area), Audio unit, Data link connector, Driver's seat heater switch, Front accessory power socket, MICU, Navigation unit, Stereo amplifier, TPMS control unit
G503	A/T gear position indicator panel light/Park-pin switch, Front passenger's power window switch (including front passenger's door lock switch), Front passenger's power door lock knob switch, Front passenger's seat heater switch, Glove box light, HVAC control unit, Right power mirror defogger
G504	Audio unit, Navigation unit
G505	Memory erase signal (MES) connector, SRS unit (2 wires)
G551	Console accessory power socket, Driver's seat belt buckle switch, Driver's seat heater
G552	Front passenger's seat belt buckle switch, Front passenger's seat heater, ODS unit, Right rear door lock knob switch, Yaw rate-lateral acceleration sensor
G601	Left rear door lock knob switch, Right taillight
G602	Fuel pump, High mount brake light, Left taillight, License plate lights, MICU (2 wires), MICU service check connector, Rear accessory power socket, Rear window defogger, Rear window wiper motor, Tailgate latch switch, Tailgate outer handle switch, Tailgate release actuator, (G602 connects to G401 via under-dash fuse/relay box)

Under-hood Fuse/Relay Box

Removal and Installation

Removal

1. Make sure you have the anti-theft codes for the audio and navigation system. If equipped with XM radio, write down the XM radio presets.
2. Make sure the ignition switch is OFF.
3. Disconnect the negative battery cable, then disconnect the positive cable, and wait at least 3 minutes.
4. Remove the screws (A) for the alternator and battery cable terminals from the under-hood fuse/relay box.

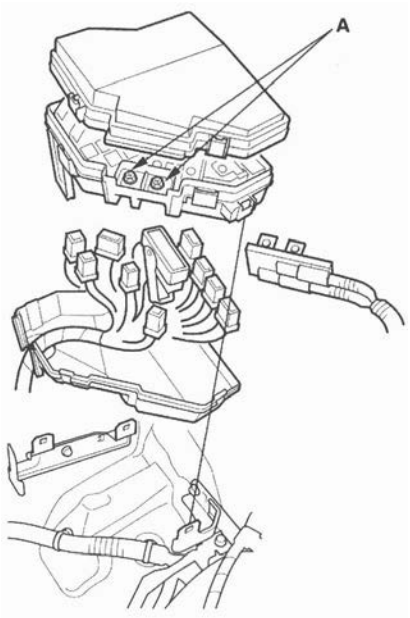

5. Remove the bottom cover from the under-hood fuse/relay box.
6. Disconnect the connectors from the under-hood fuse/relay box.
7. Carefully remove the relays by prying under the base of the relay.

   NOTE: Do not use pliers. Pliers will damage the relays, which could cause the engine to stall or not start.

Installation

1. Install the relays and connect the connectors to the under-hood fuse/relay box, then install the under-hood fuse/relay box in the reverse order of removal.
2. Install the removed parts in the reverse order of removal.
3. Connect the positive cable to the battery, then connect the negative cable to the battery.
4. Enter the audio and navigation system anti-theft codes, and set the clock. If equipped with XM radio, enter the XM radio presets.
5. Confirm that all systems work properly.

Under-dash Fuse/Relay Box

Removal and Installation

SRS components are located in this area. Review the SRS component locations (see page 24-13) and precautions and procedures (see page 24-15) before doing repairs or servicing.

Removal

1. Make sure you have anti-theft codes for the audio and navigation system. If equipped with XM radio, write down the XM radio presets.
2. Make sure the ignition switch is OFF.
3. Disconnect the negative battery cable, then disconnect the positive cable, and wait at least 3 minutes.
4. Remove the driver's dashboard lower cover (see page 20-101).
5. Disconnect the connectors from the fuse side of the under-dash fuse/relay box (A).

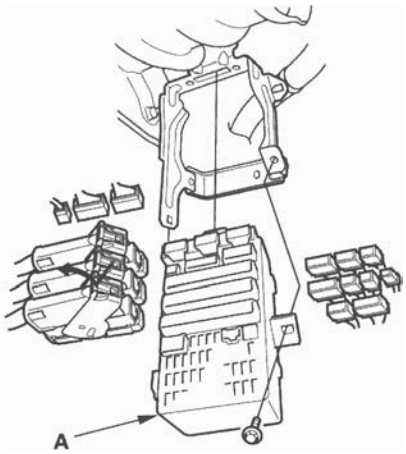

6. Remove the mounting bolt, and pull the fuse/relay box away from the body.
7. Disconnect the connectors from the back side of the under-dash fuse/relay box, then remove the under-dash fuse/relay box.
8. Carefully remove the relays by prying under the base of the relay.

   NOTE: Do not use pliers. Pliers will damage the relays, which could cause the engine to stall or not start.

Installation

1. Install the relays and connect the connectors to the under-dash fuse/relay box, then install the under-dash fuse/relay box in the reverse order of removal.
2. Install the removed parts in the reverse order of removal.
3. Connect the positive cable to the battery, then connect the negative cable to the battery.
4. Register the immobilizer system with the HDS (see page 22-302).

   NOTE: The imoes unit is built into the MICU which is part of the under-dash fuse/relay box. Because of this construction, the imoes must be registered, or the vehicle will not start.
5. Enter the audio and navigation system anti-theft codes, and set the clock. If equipped with XM radio, enter the XM radio presets.
6. Confirm that all systems work properly.

Battery Test

⚠ WARNING

A battery can explode if you do not follow the proper procedure, causing serious injury to anyone nearby. Follow all procedures carefully and keep sparks and open flames away from the battery.

Use an ED-18™ Battery Tester, and follow the manufacturer's procedures. If you don't have one of these computerized testers, follow this conventional test procedure:

1. Be sure the temperature of the electrolyte is between 70 °F (21 °C) and 100 °F (38 °C).
2. Inspect the battery case for cracks or leaks.
   - If the case is damaged, replace the battery. ■
   - If the case looks OK, go to step 3.
3. Check the test indicator window.
   - If the test indicator window indicates the battery is charged, go to step 4.
   - If the test indicator window indicates a low charge, go to step 7.
4. Apply a 300 amp load for 15 seconds to remove the surface charge.
5. Wait 15 seconds, then apply a test load of 280 amps for 15 seconds.
6. Record battery voltage.
   - If voltage is above 9.6 V, the battery is OK. ■
   - If voltage is below 9.6 V, go to step 7.
7. Charge the battery on High (40 amps) until the test indicator window shows the battery is charged, plus an additional 30 minutes. If the battery charge is very low, it may be necessary to bypass the charger's polarity protection circuitry.
   - If the test indicator window indicates the battery is charged within three hours, repeat steps 4 through 6. If the battery is still below 9.6 V, replace the battery. ■
   - If the test indicator window indicates the battery is not charged within three hours, replace the battery. ■

Power Relay Test

Use this chart to identify the type of relay, then do the test listed for it.

Relay	Test
A/C compressor clutch relay	Normally-open type
A/C condenser fan relay	
Blower motor relay	
Cargo area accessory power socket relay	
Console accessory power socket relay	
ETCS control relay	
Front accessory power socket relay	
Ignition coil relay	
PGM-FI main relay 1 (FI MAIN)	
PGM-FI main relay 2 (FUEL PUMP)	
PGM-FI subrelay	
Power mirror defogger relay	
Power window relay	
Radiator fan relay	
Rear window defogger relay	
Seat heater relays (high) (Driver's, Front passenger's)	
Starter cut relay	
Fan control relay	Five-terminal type
Rear window wiper motor relay	
Seat heater relays (low) (Driver's, Front passenger's)	

Normally-open type

Check for continuity between the terminals.

- There should be continuity between the No. 1 and No. 2 terminals when battery positive terminal is connected to the No. 4 terminal, and battery negative terminal is connected to the No. 3 terminal.
- There should be no continuity between the No. 1 and No. 2 terminals when power is disconnected.

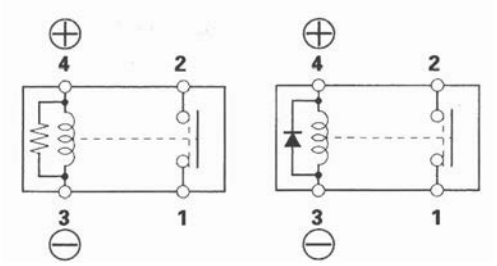

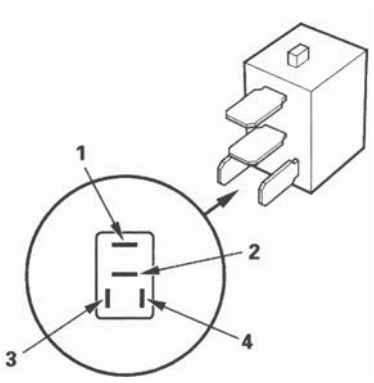

Five-terminal type B

Check for continuity between the terminals.

- There should be continuity between the No. 1 and No. 2 terminals when battery positive terminal is connected to the No. 5 terminal, and battery negative terminal is connected to the No. 3 terminal.
- There should be continuity between the No. 1 and No. 4 terminals when power is disconnected.

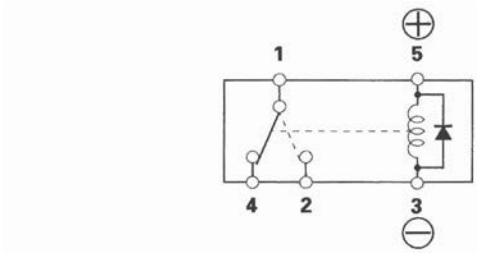

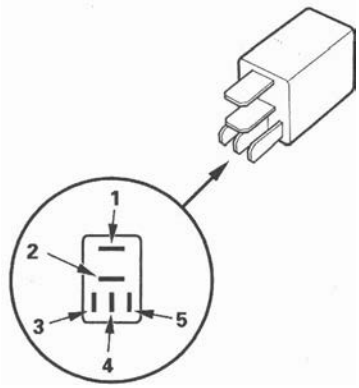

Ignition Switch

Test

SRS components are located in this area. Review the SRS component locations (see page 24-13) and precautions and procedures (see page 24-15) before performing repairs or servicing.

1. Make sure you have anti-theft codes for the audio and navigation system. If equipped with XM radio, write down the XM radio presets.
2. Turn the ignition switch OFF, and disconnect the negative battery cable.
3. Remove the driver's dashboard lower cover (see page 20-101) and the steering column covers (see page 17-25).
4. Disconnect the 7P connector (A) from the ignition switch (B).

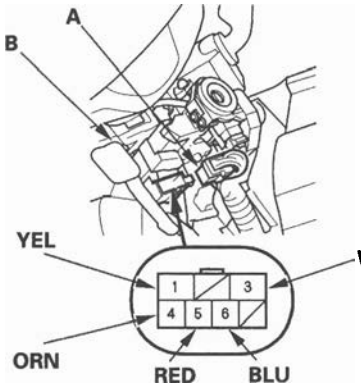

5. Check for continuity between the terminals in each switch position according to the table.

Position \ Terminal	RED (ACC)	WHT (BAT)	BLU (IG1)	ORN (IG2)	YEL (ST)
O (LOCK)					
I (ACC)	○	○			
II (ON)	○	○	○	○	
III (START)		○	○		○

6. If the continuity checks do not agree with the table, replace the ignition switch (see page 22-68).
7. After reconnecting the battery, enter the audio and navigation system anti-theft codes, and set the clock. If equipped with XM radio, enter the XM radio presets.

Replacement

SRS components are located in this area. Review the SRS component locations (see page 24-13) and precautions and procedures (see page 24-15) before performing repairs or servicing.

1. Make sure you have anti-theft codes for the audio and navigation system. If equipped with XM radio, write down the XM radio presets.
2. Turn the ignition switch OFF, and disconnect the negative battery cable.
3. Remove the driver's dashboard lower cover (see page 20-101) and the steering column covers (see page 17-25).
4. Disconnect the 7P connector (A) from the ignition switch (B).

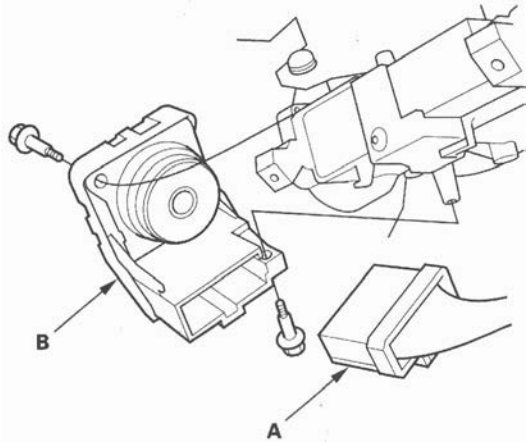

5. Remove the two screws and the ignition switch.
6. Install the ignition switch in the reverse order of removal.
7. After reconnecting the battery, enter the audio and navigation system anti-theft codes, and set the clock. If equipped with XM radio, enter the XM radio presets.

Component Location Index

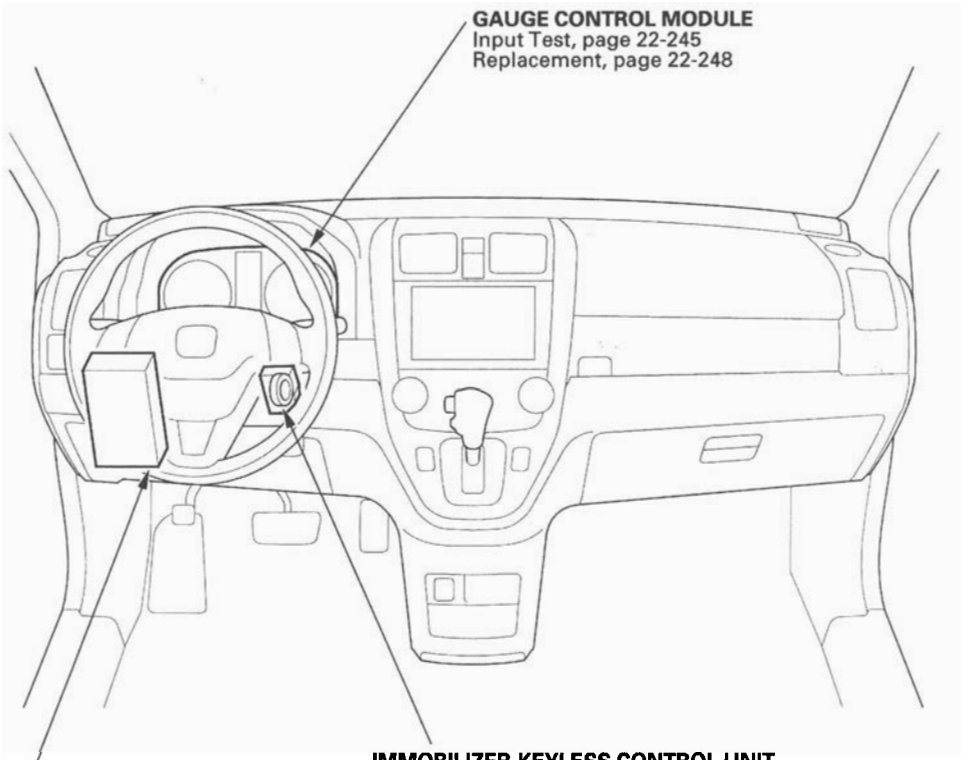

General Troubleshooting Information

Troubleshooting CAN Circuit Related Problems

NOTE: Check the PCM for DTCs, and troubleshoot PCM (see page 11-3) or F-CAN loss of communication errors first.

Using the HDS (Preferred method)

1. Go to B-CAN System Diagnosis Test Mode A to check for "Connected units" and DTCs (see page 22-92).
2. If no DTCs are retrieved, go to B-CAN System Diagnosis Test Mode C (see page 22-94) or D (see page 22-95).

Without HDS (Use only if the HDS is unavailable)

1. Check for communication circuit problems using B-CAN System Diagnostic Test Mode 1 and Mode 2 (see page 22-96).
2. Check for DTCs.
3. Sort, and then troubleshoot the DTCs in the order below.
   - -1 Battery voltage DTCs
   - -2 Internal error DTCs
   - -3 Loss of communication DTCs (beginning with the lowest number first; for example, if B1008 and B1011 are retrieved, troubleshoot B1008 first)
   - -4 Signal error DTCs
4. If no DTCs are retrieved, use B-CAN System Diagnostic Test Mode 2 to check all inputs related to failure (see step 10 on page 22-96).

How to display DTCs on the gauge control module

While in Test Mode 1, the DTCs which have been detected and stored individually by various B-CAN (Body-controller Area Network) units, will be shown one by one on the odometer display when the communication between the MICU and the gauge control module is normal. To scroll through the DTCs, press the select/reset button.



DTC detected (the lower four digits are a decimal number representing the DTC)



No DTCs detected



All DTCs have been displayed

The unit that has stored the code can be identified by the number shown on the multi-information display.

MICU	10
Gauge control module	50
Immobilizer-keyless control unit	96

How to clear the DTC

While in Test Mode 1, press and hold down the SELECT/RESET button for about 13 seconds.

(cont'd)

General Troubleshooting Information (cont'd)

Loss of Communication DTC cross-reference chart

When an ECU is unable to communicate with the other ECUs on the CAN circuit, the other control units will set loss of communication DTCs. Use this chart to find the control unit that is not communicating.

1. Find the transmitting control unit that is in the same row as all of the loss of communication DTCs retrieved.
2. Do the input test for the transmitting control unit.

BUS OFF and Internal Error Codes

DTC type	Related Unit		
	MICU	Gauge Control Module	Immobilizer-Keyless Control Unit
BUS OFF	B1000	B1150	B1900
ECU (CPU) Error	B1001		
ECU (EEPROM) Error	B1002	B1152	

Transmitting Control Unit	Message	Receiving Unit/Loss of Communication DTC		
		MICU	Gauge Control Module	Immobilizer-Keyless Control Unit
MICU	RM		B1188	
	HLSW		B1155	
	WIPSW		B1156	
	MICU		B1157	
	DOORSW		B1159	
	DRLOCKSW		B1160	B1905
Gauge Control Module	VSP/NE	B1011		
	A/T	B1008		B1906
	ENG TEMP			
PCM	ENG		B1168	
	A/T		B1169	
VSA	VSA		B1170	
TPMS	TPMS		B1173	
SRS	SRS		B1187	

DTC Troubleshooting Index

NOTE: Check the PCM for DTCs, and troubleshoot PCM (see page 11-3) or F-CAN loss of communication errors first, then record all DTCs. Sort them by DTC type using the DTC troubleshooting index, then troubleshoot the DTC(s) in this order.

- Battery voltage DTCs
- Internal error DTCs
- Loss of communication DTCs (beginning with the lowest number first; for example, if B1008 and B1011 are retrieved, troubleshoot B1008 first).
- Signal error DTCs

MICU

DTC	Description	DTC type	Page
B1000	Communication bus line error (BUS-OFF)	Loss of communication	(see page 22-100)
B1001	MICU internal error (CPU error)	Internal error	(see page 22-101)
B1002	MICU internal error (EEPROM error)	Internal error	(see page 22-102)
B1008	MICU lost communication with the gauge control module (A/T message)	Loss of communication	(see page 22-102)
B1011	MICU lost communication with the gauge control module (VSP/NE message)	Loss of communication	(see page 22-102)
B1026	Front passenger's door lock switch signal error (LOCK/UNLOCK)	Signal error	(see page 22-116)
B1028	Rear window wiper motor (As) signal error	Signal error	(see page 22-205)
B1032	MICU lost communication with the SRS unit (CDS message)	Signal error	(see page 22-104)
B1036	IG1 line input error	Signal error	(see page 22-105)
B1077	Windshield wiper (As) signal error	Signal error	(see page 22-209)
B1078	Daytime running lights signal error (Canada)	Signal error	(see page 22-150)
B1079	Daytime running lights signal error (USA)	Signal error	(see page 22-150)
B1127	Driver's door key cylinder switch signal error (LOCK/UNLOCK)	Signal error	(see page 22-118)
B1128	Driver's door lock switch signal error (LOCK/UNLOCK)	Signal error	(see page 22-119)
B1129	Driver's door lock knob switch signal error (LOCK/UNLOCK)	Signal error	(see page 22-121)
B1275	Combination light switch OFF position circuit malfunction	Signal error	(see page 22-152)
B1276	Combination light switch parking (SMALL) position circuit malfunction	Signal error	(see page 22-152)
B1278	Combination switch ON position circuit malfunction	Signal error	(see page 22-152)
B1279	Headlight switch DIMMER position circuit malfunction	Signal error	(see page 22-154)
B1280	Turn signal switch circuit malfunction	Signal error	(see page 22-156)
B1281	Windshield wiper switch MIST position circuit malfunction	Signal error	(see page 22-211)
B1282	Windshield wiper switch INT (AUTO) position circuit malfunction	Signal error	(see page 22-211)
B1283	Windshield wiper switch LOW position circuit malfunction	Signal error	(see page 22-211)
B1284	Windshield wiper switch HIGH position circuit malfunction	Signal error	(see page 22-211)

(cont'd)

DTC Troubleshooting Index (cont'd)

Gauge Control Module

DTC	Description	DTC type	Page
B1150	Communication bus line error (BUS-OFF)	Loss of communication	(see page 22-104)
B1152	Gauge control module internal error (EEPROM error)	Internal error	(see page 22-236)
B1155	Gauge control module lost communication with MICU (HLSW message)	Loss of communication	(see page 22-236)
B1156	Gauge control module lost communication with MICU (WIPSW message)	Loss of communication	(see page 22-236)
B1157	Gauge control module lost communication with MICU (MICU message)	Loss of communication	(see page 22-236)
B1159	Gauge control module lost communication with MICU (DOORSW message)	Loss of communication	(see page 22-236)
B1160	Gauge control module lost communication with MICU (DRLOCKSW message)	Loss of communication	(see page 22-236)
B1168	Gauge control module lost communication with PCM (Engine messages)	Loss of communication	(see page 22-237)
B1169	Gauge control module lost communication with PCM (A/T message)	Loss of communication	(see page 22-237)
B1170	Gauge control module lost communication with the VSA modulator-control unit (VSA message)	Loss of communication	(see page 22-238)
B1173	Gauge control module lost communication with TPMS control unit (TPMS message)	Loss of communication	(see page 22-239)
B1175	Fuel level sensor (Fuel gauge sending unit) circuit open	Signal error	(see page 22-240)
B1176	Fuel level sensor (Fuel gauge sending unit) circuit short	Signal error	(see page 22-241)
B1177	Battery voltage abnormal	Battery voltage	(see page 22-242)
B1178	F-CAN communication line error	Loss of communication	(see page 22-243)
B1187	Gauge control module lost communication with SRS unit (SRS message)	Loss of communication	(see page 22-244)
B1188	Gauge control module lost communication with MICU (RM message)	Loss of communication	(see page 22-236)

Immobilizer-Keyless Control Unit

DTC	Description	DTC type	Page
B1900	Communication bus line error (BUS-OFF)	Loss of communication	(see page 22-104)
B1905	Immobilizer-keyless control unit lost communication with MICU (DRLOCKSW message)	Loss of communication	(see page 22-289)
B1906	Immobilizer-keyless control unit lost communication with gauge control module (A/T message)	Loss of communication	(see page 22-290)

System Description

MICU Control Functions Index

The MICU (built into the under-dash fuse/relay box) is one of the B-CAN components. The MICU controls many systems related to the body controller area network, and also works as a gateway to diagnose the other B-CAN circuits with the HDS.
Refer to each system circuit diagram for details.

System	Function
Multiplex Control	Sends the switch input signal information to the MICU which commands distributes the information. The MICU controls the ECUs electric load and communication based upon the information received by the B-CAN.
On-Board Diagnosis	The MICU has a gateway function which sends the results of the MICU internal diagnosis and the B-CAN connected ECUs diagnosis to the HDS.
Self-Diagnosis	Test mode 1 diagnoses the communication line between the MICU and B-CAN connected unit. Test mode 2 checks the switch inputs connected to the MICU.
Interior Light(s)	The MICU controls the interior lights ON, OFF and dimming based upon the information of the related switches and/or the B-CAN related information.
Sleep Function	The MICU has a sleep function, which it enters during the power down mode.

The MICU also controls the function of these circuits:

- Entry lights control (map lights and ceiling light)
- Exterior lights control (including the daytime running lights control)
- Horn
- Interlock system
- Key-in reminder
- Keyless entry
- Lights-on reminder
- Power door locks
- Power window key-off timer
- Seat belt reminder
- Security alarm
- Turn signal/hazard flasher
- Wiper/washer

(cont'd)

System Description (cont'd)

Body Controller Area Network (B-CAN) and Fast Controller Area Network (F-CAN)

The body controller area network (B-CAN) and the fast controller area network (F-CAN) share information between multiple electronic control units (ECUs). B-CAN communication moves at a slower speed (33.33 kbps) for convenience related items and for other functions. F-CAN information moves at a faster speed (500 kbps) for "real time" functions such as fuel and emissions data. To allow both systems to share information, the gauge control module translates information from B-CAN to F-CAN and from F-CAN to B-CAN.

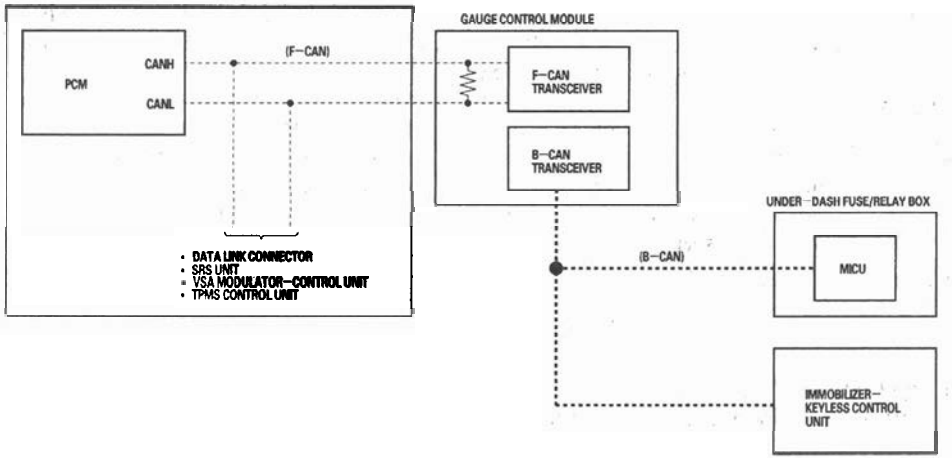

- The single wire method is used between the units not requiring the communication to move at a fast speed.
- Using a single wire method reduces the number of the wires used on the body controller area network.

Gateway Function

The gauge control module acts as a gateway to allow both systems to share information, the gauge control module translates information from B-CAN to F-CAN and from F-CAN to B-CAN.

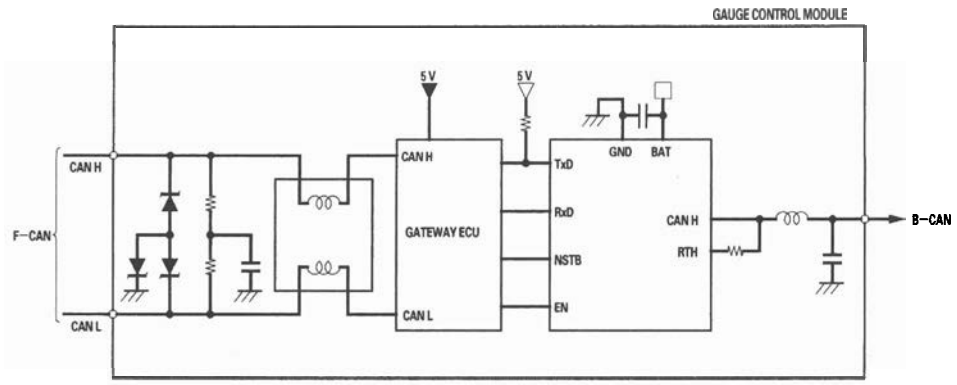

Network "Loss of Communication" Error Checking Function

The ECUs on the CAN circuit send messages to each other. If there are any malfunctions on the network, the odo/trip display on the gauge control module can indicate the error messages by entering the gauge self-diagnostic function (see page 22-229).

Error Code List

Error code	Type of communication line(s) error
Error 1	F-CAN communication
Error 2	B-CAN communication
Error 12	F-CAN and B-CAN communication

NOTE: For further information about Error indication, refer to the gauge control module self-diagnostic function (see page 22-229).

Example: Error 1



(cont'd)

System Description (cont'd)

Self-diagnostic Function

By connecting the HDS to the data link connector (DLC), the HDS can retrieve the diagnostic results from the MICU via a diagnostic line called K-LINE. The K-LINE is distinguished from the CAN line, and connected to the CAN related ECUs. The MICU is a gateway between the HDS and B-CAN related ECUs, and sends B-CAN diagnostic results to the HDS. When performing a function test with the HDS, the HDS sends an output signal through the K-LINE to the MICU. The MICU either relays the request to another ECU, or commands the function its self.

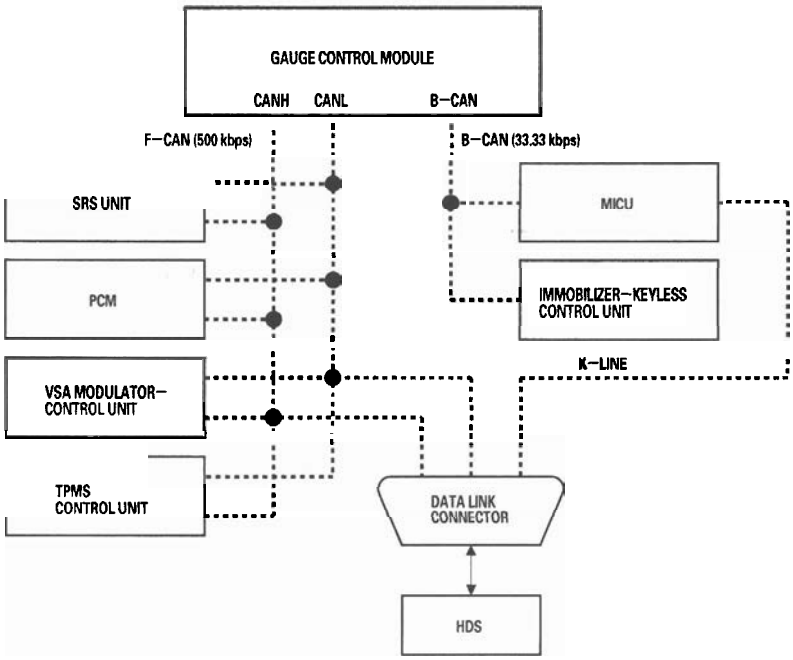

Wake-up and Sleep Function

The multiplex integrated control system has "wake-up" and "sleep" functions to decrease parasitic draw on the battery when the ignition switch is OFF.

- In the sleep mode, the MICU stops functioning (communication and CPU control) when it is not necessary for the system to operate.
- As soon as any operation is requested (for example, a door is unlocked), the related control unit in the sleep mode immediately wakes up and begins to function.
- When the ignition switch is turned OFF, and the driver's door is opened, then closed, there is a delay of about 40 seconds before the control unit goes from the wake-up mode to the sleep mode.
- The sleep mode will not function if any door is opened or if a key is in the ignition.
- The draw is reduced from 200 mA to less than 35 mA when in the sleep mode.

NOTE: Sleep and Wake-up Mode Test (see page 22-98).

Fail-safe Function

To prevent improper operation, the MICU has a fail-safe function. In the fail-safe mode, the output signal is fixed when any part of the system malfunctions (for example, a faulty control unit or communication line).
Each control unit has a hardware fail-safe function that fixes the output signal when there is a CPU malfunction, and a software fail-safe function that ignores the signal from a malfunctioning control unit, which allows the system to operate normally.

Hardware Fail-safe Control

Fail-safe function
When a CPU problem or a abnormal power supply voltage is detected, the MICU moves to the hardware fail-safe mode, and each system output load is set to the pre-programmed fail-safe value.

Software Fail-safe Control

When any of the data from the B-CAN circuit cannot be received within a specified time, or an unusual combination of the data is recognized, the MICU moves to the software fail-safe mode. The data that cannot be received is forced to a pre-programmed value.

(cont'd)

System Description (cont'd)

Power Supply Voltage Monitoring Function

The MICU monitors the power supply voltage (back-up voltage). If the voltage goes below 10 V, the MICU sends a MICU message and will not store DTCs.

	Input	Output
MICU	Battery voltage	
B-CAN		MICU message

Entry Lights Control System (Ceiling Lights, Map Lights, Ignition Key Light)

The MICU controls the ceiling light ON/OFF based upon the input signals from each switch.

	Input	Output
MICU	IG1 power supply Ignition key switch Driver's door switch Front passenger's door switch Left rear door switch Right rear door switch Driver's door lock knob switch (LOCK)	Interior lights Ignition key light
B-CAN	Keyless LOCK/UNLOCK signal	

Cargo Area Lights Control

The MICU controls the cargo area light ON/OFF based upon the input signals from each switch.

	Input	Output
MICU	Tailgate latch switch	Cargo area light

Collision Detection Signal (CDS)

The MICU controls the door lock actuators based upon the IG1 and the SRS signals.

	Input	Output
MICU	IG1 power supply SRS signals	Door lock actuators (UNLOCK) Door lock actuator (LOCK)
B-CAN	CDS signal	

Key Interlock

The MICU controls the key interlock solenoid based upon the ignition switch (ACC), the transmission range switch, and the park-pin switch signals.

	Input	Output
MICU	Ignition switch (ACC) Transmission range switch (P) Park-pin switch	Key interlock solenoid

Key-in Reminder

The MICU controls the door lock actuators based upon the ignition key switch, the driver's door switch, and the driver's door lock knob switch signals.

	Input	Output
MICU	Ignition key switch Driver's door switch Driver's door lock knob switch (UNLOCK)	Door lock actuators (LOCK) Door lock actuators (UNLOCK) Driver's door lock actuator (UNLOCK)

Power Window Timer Operation

The MICU controls the power window key-off timer based upon the ignition key switch, driver's and front passenger's door switch signals.

	Input	Output
MICU	Ignition key switch Driver's door switch Front passenger's door switch	Power window timer

Headlight

The MICU controls the headlight based upon the input signals from each switch.

	Input	Output
MICU	Battery voltage (DRL) IG1 power supply	Headlight (Low beam) Left headlight (High beam) Right headlight (High beam) Taillight relay
B-CAN	Combination light switch (OFF) Combination light switch (ON) Combination light switch (SMALL) Combination light switch (PASSING) Combination light switch (DIMMER)	MICU (RM) message MICU (HLSW) message

Daytime Running Lights

The MICU controls the exterior lights as daytime running lights based upon the input signals from each switch.

	Input	Output
MICU	IG1 power supply IG2 power supply Combination light switch (OFF) Combination light switch (ON) Combination light switch (PASSING) Combination light switch (DIMMER)	Headlight (Low beam) Left headlight (High beam) Right headlight (High beam) Taillight relay
B-CAN	Parking brake signal AT-P signal	MICU (RM) message

Turn Signal/Hazard Flasher

The MICU controls the turn signal/hazard flasher lights based upon the input signals from the turn signal switch and the hazard warning switch.

	Input	Output
MICU	IG1 power supply Turn signal switch (left) Turn signal switch (right) Hazard warning switch	Turn signal lights (left) Turn signal lights (right)
B-CAN	Turn signal switch (left) Turn signal switch (right)	MICU (HAZARDSW) message MICU (TURNLRLY) message MICU (TURNRRLY) message HLSW (TURNR) message HLSW (TURNL) message

Turn Signal One Touch Operation

The MICU controls the turn signal switch based upon the input signals from the turn signal switch.

	Input	Output
MICU	IG1 power supply Turn signal switch (left) Turn signal switch (right) Hazard warning switch	Turn signal lights (left) Turn signal lights (right)

(cont'd)

System Description (cont'd)

Windshield Wiper

The MICU controls the windshield wiper based upon the input signals from each switch.

	Input	Output
MICU	IG1 power supply Windshield wiper switch (INT & LO) Windshield wiper switch (HI & LO) Windshield wiper switch (MIST) Windshield wiper switch (As) Windshield wiper switch intermittent dwell time controller	Windshield wiper intermittent relay Windshield wiper motor high relay
B-CAN	A/T signal	MICU (RM) message MICU (WIPSW) message

Windshield Wiper (Vehicle Speed Sense)

The MICU controls the windshield wiper based upon the input signals from each switch.

	Input	Output
MICU	IG1 power supply Brake pedal position switch Transmission range switch (P position) Windshield wiper switch (INT & LO) Windshield wiper switch (HI & LO) Windshield wiper switch (MIST) Windshield wiper switch (As) Windshield wiper switch intermittent dwell time controller	Windshield wiper intermittent relay Windshield wiper motor high relay
B-CAN	A/T signal VSP/NE signal	MICU (WIPSW) message

Rear Window Wiper

The MICU controls the rear window wiper based upon the input signals from each switch.

	Input	Output
MICU	IG1 power supply Back-up light switch Rear window wiper switch Rear window wiper switch (As) Windshield wiper switch (INT) Windshield wiper switch (LO) Windshield wiper switch (HI)	Rear window wiper motor relay
B-CAN		MICU (WIPSW) message

Windshield/Rear Window Washer

The MICU controls the washer operation based upon the input signals from washer switches.

	Input	Output
MICU	IG1 power supply Windshield washer switch Rear window washer switch	Windshield washer motor Rear window washer motor

Answer Back Response Operation (Part 1)

The MICU controls the lighting system and horn based upon the B-CAN signals.

	Input	Output
MICU	IG1 power supply	Turn signal lights (left) Turn signal lights (right)
B-CAN	ANSBACK (HAZARD) signal VSP/NE signal	

Answer Back Response Operation (Part 2)

The MICU controls the lighting system and horn based upon the B-CAN signals.

	Input	Output
MICU		Headlight (Low beam) Taillight relay Horns
B-CAN	ANSBACK (SMALL) signal ANSBACK (H/L LO) signal ANSBACK (HORN) signal ANSBACK (BUZZER) signal	

Power Door Locks (1 motion all doors and tailgate unlock)

The MICU controls the door lock actuators based upon the input signals of each switch.

	Input	Output
MICU	IG1 power supply Ignition key switch Driver's door switch Front passenger's door switch Left rear door switch Right rear door switch Tailgate latch switch Driver's door lock switch (LOCK/UNLOCK) Driver's door key cylinder switch (LOCK/UNLOCK) Driver's door lock knob switch (LOCK) Front passenger's door lock switch (LOCK/UNLOCK) Front passenger's door key cylinder switch (LOCK/UNLOCK)	Door lock actuators (LOCK) Door lock actuators (UNLOCK)

Power Door Locks (2 motions all doors and tailgate unlock)

The MICU controls the door lock actuators based upon the input signals of each switch.

	Input	Output
MICU	IG1 power supply Ignition key switch Driver's door switch Front passenger's door switch Left rear door switch Right rear door switch Tailgate latch switch Driver's door lock switch (LOCK/UNLOCK) Driver's door key cylinder switch (LOCK/UNLOCK) Driver's door lock knob switch (LOCK) Front passenger's door lock switch (LOCK/UNLOCK) Front passenger's door key cylinder switch (LOCK/UNLOCK)	Door lock actuators (LOCK) Door lock actuators (UNLOCK) Driver's door lock actuator (UNLOCK)

(cont'd)

System Description (cont'd)

Door Lock Response Operation

The MICU controls the door lock actuators based upon the B-CAN signals.

	Input	Output
MICU		Door lock actuator (LOCK) Door lock actuator (UNLOCK) Driver's door lock actuator (UNLOCK) Tailgate release actuator
B-CAN	Door lock signal	

Keyless Entry System (1 motion all doors and tailgate unlock)

The MICU controls the door lock actuators based upon the input signals of each switch and the B-CAN signals.

	Input	Output
MICU	IG1 power supply Ignition key switch Driver's door switch Front passenger's door switch Left rear door switch Right rear door switch Tailgate latch switch Driver's door lock knob switch (LOCK) Driver's door lock switch (LOCK/UNLOCK) Driver's door key cylinder switch (LOCK/UNLOCK) Front passenger's door lock switch (LOCK/UNLOCK) Front passenger's door key cylinder switch (LOCK/UNLOCK)	Door lock actuator (LOCK) Door lock actuator (UNLOCK) Tailgate release actuator
B-CAN	Keyless LOCK/UNLOCK signal	Relock signal

Keyless Entry System (2 motions all doors and tailgate unlock)

The MICU controls the door lock actuators based upon the input signals of each switch and the B-CAN signals.

	Input	Output
MICU	IG1 power supply Ignition key switch Driver's door switch Front passenger's door switch Left rear door switch Right rear door switch Tailgate latch switch Driver's door lock knob switch (LOCK) Driver's door lock switch (LOCK/UNLOCK) Driver's door key cylinder switch (LOCK/UNLOCK) Front passenger's door lock switch (LOCK/UNLOCK) Front passenger's door key cylinder switch (LOCK/UNLOCK)	Door lock actuators (LOCK) Door lock actuators (UNLOCK) Driver's door lock actuator (UNLOCK) Tailgate release actuator
B-CAN	Keyless LOCK/UNLOCK signal	Relock signal

Keyless PANIC Operation

The MICU controls the keyless PANIC operation based upon the B-CAN signals.

	Input	Output
MICU		Headlights (Low beam) Taillight relay Horns
B-CAN	PANIC signals	

Power Door Locks (Lock operation)

The MICU controls the door lock actuators based upon the input signals of each switch.

	Input	Output
MICU	IG1 power supply Transmission range switch (P position) Driver's door switch Front passenger's door switch Left rear door switch Right rear door switch Tailgate latch switch Driver's door lock knob switch (UNLOCK) Front passenger's door lock knob switch (UNLOCK) Left rear door lock knob switch (UNLOCK) Right rear door lock knob switch (UNLOCK)	Door lock actuators (LOCK)
B-CAN	Vehicle speed pulse signal Engine speed signal	

Power Door Locks (UNLOCK operation)

The MICU controls the door lock actuators based upon the input signals of each switch.

	Input	Output
MICU	IG1 power supply Transmission range switch (P position) Driver's door switch Front passenger's door switch Left rear door switch Right rear door switch Tailgate latch switch Driver's door lock knob switch (UNLOCK) Front passenger's door lock knob switch (UNLOCK) Left rear door lock knob switch (UNLOCK) Right rear door lock knob switch (UNLOCK)	Door lock actuators (UNLOCK) Driver's door lock actuator (UNLOCK)

(cont'd)

System Description (cont'd)

Security Alarm System

The MICU controls the lighting system and horns based upon the input signals of each switch and the B-CAN signals.

	Input	Output
MICU	IG1 power supply Ignition key switch Audio switch Driver's door switch Front passenger's door switch Left rear door switch Right rear door switch Tailgate latch switch Driver's door key cylinder switch (LOCK/UNLOCK) Driver's door lock knob switch (UNLOCK) Front passenger's door key cylinder switch (LOCK/UNLOCK) Front passenger's door lock knob switch (UNLOCK) Left rear door lock knob switch (UNLOCK) Right rear door lock knob switch (UNLOCK) Hood switch	Headlight (Low beam) Taillight relay Horns
B-CAN	Keyless LOCK/UNLOCK signal Door lock signal	MICU (SET 1) message MICU (SET 2) message ALARM (ACTION) message

Tailgate Outer Handle Operation (1 motion all doors and tailgate unlock)

The MICU controls the tailgate release actuator based upon the tailgate outer handle switch and the driver's door lock knob switch signals.

	Input	Output
MICU	Tailgate outer handle switch Driver's door lock knob switch (LOCK/UNLOCK)	Tailgate release actuator

Tailgate Outer Handle Switch Operation (2 motions all doors and tailgate unlock)

The MICU controls the tailgate release actuator based upon the tailgate outer handle switch and the door lock knob switch signals.

	Input	Output
MICU	Tailgate outer handle switch Driver's door lock knob switch (LOCK/UNLOCK) Front passenger's door lock knob switch (UNLOCK) Left rear door lock knob switch (UNLOCK) Right rear door lock knob switch (UNLOCK)	Tailgate release actuator

HDS Inputs and Commands

Certain inputs happen so quickly that the HDS cannot update fast enough. Hold the switch that is being tested while monitoring the Data List. This should give the HDS time to update the signal on the Data List.
Because the HDS software is updated to support the release for newer vehicles it is not uncommon to see system function tests that are not supported.
Make sure that the most current software is loaded.

Input:

System Menu	Data List	Data List Indication
Gauges	Cruise Control Main Switch (ACC switch)	OFF/ON
	Cruise Control Set Switch	OFF/ON
	Cruise Control Resume Switch	OFF/ON
	Washer Fluid Level Switch	OFF/ON
	VSA/TCS Off Switch	OFF/ON
	Gauge Select/Reset Switch	OFF/ON
	Parking Brake Switch	OFF/ON
	Brake Fluid Level Switch	OFF/ON
	Select/Reset Switch	OFF/ON
	INFO Next Switch	OFF/ON
	ACC Distance Switch	OFF/ON
	CMBS Cancel Switch	OFF/ON
	Fuel Sending Unit Input 1	deg
	Fuel Sending Unit Input 2	V
	VSA/TCS Active Indicator	OFF/ON
	VSA/TCS Indicator (Warning)	OFF/ON
	ABS Indicator	OFF/ON
	EBD Indicator (Electric Brake Distribution)	OFF/ON
	Cruise Control Main Switch Indicator	OFF/ON
	MIL Indicator	OFF/ON
	Washer Fluid Level Indicator (Canada)	OFF/ON
	CMBS Indicator	OFF/ON
	HIDS Indicator	OFF/ON
	ACC Indicator	OFF/ON
	Low Oil Pressure Indicator	OFF/ON
	Changing System Indicator	OFF/ON
	Cruise Main Switch ON Indicator	OFF/ON
	Maintenance Required Indicator	OFF/ON
	Maintenance Minder Indicator	OFF/ON
	High Beam Indicator	OFF/ON
	Parking Light ON Indicator	OFF/ON
	Low Fuel Warning Indicator	OFF/ON
	Security Indicator	OFF/ON
	Fog light Indicator	OFF/ON
	Adaptive Front-lighting System Indicator	OFF/ON
	Master Warning Indicator	OFF/ON
	Auto-light Indicator	OFF/ON
	Seatbelt Indicator	OFF/ON
	Low Tire Pressure Indicator	OFF/ON
	TPMS Indicator	OFF/ON
	Rear Fog Indicator	
	Keyless Access "No Keyless Remote" Warn	
	Keyless Remote Battery-Charge Warn	
	Door Open Indicator	OFF/ON
	Power Trunk Lid Indicator	OFF/ON
	A/T Indicator	OFF/ON
	SRS Indicator	OFF/ON
	Side Airbag Cutoff Indicator	OFF/ON
	Keyless Access Indicator	OFF/ON
	EPS/ECPS Indicator	OFF/ON
	CMBS Radar Become Dirty	OFF/ON
	Outside Temperature Indicator	
	Speed Indicator (mph) Command	OFF/ON
	Driver's Seat Belt Buckle Switch	OFF/ON
	A/T Gear Position Switch (R)	OFF/ON
	A/T Gear Position Switch (P)	OFF/ON

(cont'd)

System Description (cont'd)

System Menu	Data List	Data List Indication
Keyless	Driver's Door Switch	OFF/ON
	Front Passenger's Door Switch	OFF/ON
	Driver's Rear Door Switch	OFF/ON
	Passenger's Rear Door Switch	OFF/ON
	Trunk Lid/Tailgate Switch	OFF/ON
	Front Passenger's Door Lock Sw. (LOCK)	OFF/ON
	Front Passenger's Door Lock Sw. (UNLOCK)	OFF/ON
	Front Passenger's Door Lock Knob Sw. (UNLOCK)	OFF/ON
	Driver's Rear Door Lock Knob Switch (UNLOCK)	OFF/ON
	Passenger's Rear Door Lock Knob Sw. (UNLOCK)	OFF/ON
	Trunk Knob Sw. (UNLOCK)	OFF/ON
	Trunk Key Cylinder (UNLOCK)	OFF/ON
	Driver's Door Key Cylinder Switch (LOCK)	OFF/ON
	Driver's Door Key Cylinder Switch (UNLOCK)	OFF/ON
	Driver's Door Lock Switch (LOCK)	OFF/ON
	Driver's Door Lock Switch (UNLOCK)	OFF/ON
	Driver's Door Lock Knob Switch (LOCK)	OFF/ON
	Driver's Door Lock Knob Switch (UNLOCK)	OFF/ON
	Door LOCK Command	OFF/ON
	Door UNLOCK Command	OFF/ON
	Driver's Door UNLOCK Command	OFF/ON
	Trunk Lid Release Command	OFF/ON
Wiper	Brake Pedal Position Switch	OFF/ON
	Rear Wiper Auto Stop Switch	OFF/ON
	Windshield Wiper Switch (LOW)	OFF/ON
	Windshield Wiper Switch (HIGH)	OFF/ON
	Windshield Wiper Switch (MIST)	OFF/ON
	Rear Wiper Switch	OFF/ON
	Windshield Wiper Switch (INT)	OFF/ON
	Windshield Washer Switch	OFF/ON
	Rear Washer Switch	OFF/ON
	Windshield Wiper Motor PARK Switch	OFF/ON
	Rear Wiper Command	OFF/ON
	Rear Washer Command	OFF/ON
	Windshield Wiper Motor HI Command	OFF/ON
	Windshield Wiper Motor LO Command	OFF/ON
	Windshield Washer Motor Command	OFF/ON

System Menu	Data List	Data List Indication
Security	Ignition Key Cylinder Switch	OFF/ON
	Driver's Door Switch	OFF/ON
	Front Passenger's Door Switch	OFF/ON
	Driver's Rear Door Switch	OFF/ON
	Passenger's Rear Door Switch	OFF/ON
	Trunk Lid/Tailgate Switch	OFF/ON
	Front Passenger's Door Lock Sw. (LOCK)	OFF/ON
	Front Passenger's Door Lock Sw. (UNLOCK)	OFF/ON
	Front Passenger's Door Lock Knob Sw. (UNLOCK)	OFF/ON
	Driver's Rear Door Lock Knob Switch (UNLOCK)	OFF/ON
	Passenger's Rear Door Lock Knob Sw. (UNLOCK)	OFF/ON
	Trunk Knob Sw. (UNLOCK)	OFF/ON
	Trunk Key Cylinder (UNLOCK)	OFF/ON
	Radio Switch	OFF/ON
	Hazard Switch	OFF/ON
	Hood Switch	OFF/ON
	Driver's Door Key Cylinder Switch (LOCK)	OFF/ON
	Driver's Door Key Cylinder Switch (UNLOCK)	OFF/ON
	Driver's Door Look Switch (LOCK)	OFF/ON
	Driver's Door Look Switch (UNLOCK)	OFF/ON
	Driver's Door Look Knob Switch (LOCK)	OFF/ON
	Driver's Door Look Knob Switch (UNLOCK)	OFF/ON
	Door LOCK Command	OFF/ON
	Door UNLOCK Command	OFF/ON
	Driver's Door UNLOCK Command	OFF/ON
	Trunk Lid Release Command	OFF/ON
	Security Hazard Signal Command	OFF/ON
	Headlight Command	OFF/ON
	Headlight High Beam Command	OFF/ON
	Parking Light Command	OFF/ON
	Horn Command	OFF/ON

(cont'd)

System Description (cont'd)

System Menu	Data List	Data List Indication
Lighting	Driver's Door Switch	OFF/ON
	Hazard Switch	OFF/ON
	Headlight Switch (OFF)	OFF/ON
	Headlight Switch (PARKING)	OFF/ON
	Headlight Switch (HEADLIGHT)	OFF/ON
	Headlight Switch (High Beam)	OFF/ON
	Headlight Switch (PASSING)	OFF/ON
	Turn Signal Switch (LEFT)	OFF/ON
	Turn Signal Switch (RIGHT)	OFF/ON
	Fog Light Switch	OFF/ON
	Interior Light Command	OFF/ON
	Left Turn Signal Command	OFF/ON
	Right Turn Signal Command	OFF/ON
	Cargo Light Command	OFF/ON
	Headlight Command	OFF/ON
	Headlight High Beam Command	OFF/ON
	Parking Light Command	OFF/ON
	Fog Light Command	OFF/ON
	DRL Command	OFF/ON
Door Locks	Driver's Door Switch	OFF/ON
	Front Passenger's Door Switch	OFF/ON
	Driver's Rear Door Switch	OFF/ON
	Passenger's Rear Door Switch	OFF/ON
	Front Passenger's Door Lock Sw. (LOCK)	OFF/ON
	Front Passenger's Door Lock Sw. (UNLOCK)	OFF/ON
	Front Passenger's Door Lock Knob Sw. (UNLOCK)	OFF/ON
	Driver's Rear Door Lock Knob Switch (UNLOCK)	OFF/ON
	Passenger's Rear Door Lock Knob Sw. (UNLOCK)	OFF/ON
	Driver's Door Key Cylinder Switch (LOCK)	OFF/ON
	Driver's Door Key Cylinder Switch (UNLOCK)	OFF/ON
	Driver's Door Lock Switch (LOCK)	OFF/ON
	Driver's Door Lock Switch (UNLOCK)	OFF/ON
	Driver's Door Lock Knob Switch (LOCK)	OFF/ON
	Driver's Door Lock Knob Switch (UNLOCK)	OFF/ON
	Door LOCK Command	OFF/ON
	Door UNLOCK Command	OFF/ON
	Driver's Door UNLOCK Command	OFF/ON

Function Test:

System Menu	Data List Indication	Data List and Operation Time
Door Locks	LOCK all doors	Outputs LOCK signal 1 time (0.6 sec) to all doors
	UNLOCK driver's side door	Outputs UNLOCK signal 1 time (0.6 sec) to driver's door
	UNLOCK all doors	Outputs UNLOCK signal 1 time (0.6 sec) to all doors
Lighting	Interior Light Command	Illuminates for 30 seconds.
	Fog Light Command	Operates fog lights for 15 seconds.
	LEFT Turn Signal Command	Blinks for 5 seconds.
	RIGHT Turn Signal Command	Blinks for 5 seconds
	Hazard flasher	Blinks turn signal (left and right) for 15 seconds.
	Headlight Command	Operates headlights (low) for 15 seconds.
	Headlight HIGH Beam Command	Operates headlights (high) for 15 seconds.
	Daytime Running Lights Signal (Canada)	Daytime running lights for 15 seconds.
	Parking Lights Command	Operates small lights for 15 seconds.
	Cargo Light	Operates cargo light for 15 seconds.
Keyless	Trunk Lid/Tailgate Release Command	Unlock tailgate
Security	Horn Command	Operates horn for 1 second.
Wipers	Windshield Wiper Motor LOW Command	Operates windshield wiper motor for 5 seconds (low speed).
	Windshield Wiper Motor HIGH Command	Operates windshield wiper motor for 5 seconds (high speed).
	Windshield Washer Command	Operates windshield washer motor for 5 seconds.
	Rear Wiper Motor	Operates rear wiper motor for 5 seconds
	Rear Wiper Washer	Operates rear wiper washer for 5 seconds
Gauges	Self Diagnostic Test	———

Troubleshooting - B-CAN System Diagnosis Test Mode A

Check the PCM for DTCs, and troubleshoot PCM (see page 11-3) or F-CAN loss of communication errors first, then do this diagnosis if the symptom is related to the B-CAN system.

NOTE: Always cycle the ignition switch within 3 seconds when prompted in the DTC troubleshooting procedures in this section.

1. Compare the symptom with this list of B-CAN related systems:

   - Gauge control module
   - Exterior lights
   - Turn signals
   - Entry light control
   - Interior lights
   - Door-open and tailgate-open indicators
   - Horns (security and panic)
   - Chimes (key-in, seat belt, lights-on, and parking brake)
   - Power window/moonroof timer
   - Wiper/washer
   - Security
   - Keyless entry
   - Power door locks
   - Key interlock
     Dash light brightness control
   - Tailgate release actuator

   Is the symptom related to the B-CAN system?

   YES—Go to step 2.

   NO—Go to the system troubleshooting for the system with the symptom. ■

2. Connect the HDS to the data link connector (A), then turn the ignition switch ON (II).

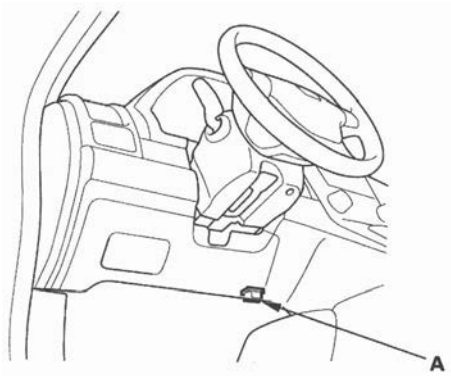

3. From the BODY ELECTRICAL system select menu, select UNIT INFORMATION, and then select CONNECTED UNIT to see if the following control units are communicating with the HDS.

   - MICU
   - Gauge control module
     Immobilizer-keyless control unit

   NOTE:
   - If a unit is communicating with the HDS, DETECT will be displayed.
   - If a unit is not communicating or the vehicle is not equipped, "Not Available" will be displayed.

   Are all control units communicating with the HDS?

   YES—Go to step 4.

   NO—If any of the control units are not communicating, go to B-CAN System Diagnosis Test Mode B (see page 22-93). If all units are not communicating or only the MICU is communicating, go to DTC B1000 troubleshooting (see page 22-100). ■

4. Select the system that has the problem from the BODY ELECTRICAL system select menu, then select DTCs.

   Are any DTCs indicated?

   YES—Go to step 5.

   NO—If the problem is related to one of the following items, go to B-CAN System Diagnosis Test Mode C (see page 22-94) if the system does not stop or turn off. Go to Test Mode D (see page 22-95) if the system does not run or turn on.

   - Exterior lights
   - Turn signals
   - Entry light control
   - Interior lights
   - Horn (security and panic)
   - Wiper/washer

   If the problem is related to one of the following items, go to the troubleshooting for that individual system.■

   - Gauge control module
   - Door-open and tailgate-open indicator
   - Chimes (key-in, seat belt, lights-on, and parking brake)
   - Security
   - Keyless entry
   - Key interlock
   - Dash light brightness control
   - Audio system
   - Navigation (if equipped)

5. Record all DTCs, and sort them by DTC type.

6. Troubleshoot the DTC(s) in this order:

   - Battery voltage DTCs.
   - Internal error DTCs.
   - Loss of communication DTCs. Begin troubleshooting with the lowest number first (Example: if DTC B1008 and B1011 are retrieved, begin by troubleshooting B1008).
   - Signal error DTCs.

Troubleshooting - B-CAN System Diagnosis Test Mode B

Do this diagnosis if any of the control units are not communicating (Not Available is displayed in the HDS) as found by the B-CAN System Diagnosis Test Mode A (see page 22-92).

1. Using the HDS, select the system that has the symptom from the BODY ELECTRICAL system select menu.

2. Select DTCs, and then check for loss of communication DTCs.

   Are any loss of communication DTCs indicated?

   YES—Go to step 3.

   NO—Replace the MICU.■

3. Do the input test for the unit not communicating with the HDS.

Unit not communicating
MICU (see page 22-106)
Gauge control module (see page 22-245)
Immobilizer-keyless control unit (see page 22-300)

Troubleshooting - B-CAN System Diagnosis Test Mode C

Do this diagnosis if a component that is controlled by the B-CAN system does not stop or turn off.

NOTE:
- If the component does not turn on, go to B-CAN System Diagnosis Test Mode D (see page 22-95).
- See the B-CAN system unit input/output index for a list of input and output devices and the control units that monitor the input and controls the output devices (see page 22-87).
- Always cycle the ignition switch within 3 seconds when prompted in the DTC troubleshooting procedures in this section.

1. Check for DTCs by selecting the TEST MODE menu from the HDS.

   Are any DTCs indicated?

   YES—Go to B-CAN System Diagnosis Test Mode A (see page 22-92).■

   NO—Go to step 2.

2. Turn off the switch that controls the malfunctioning component.

3. Select DATA LIST from the TEST MODE menu, and check the input of the switch that controls the component.

   Does the HDS indicate the switch is OFF?

   YES—Go to step 4.

   NO—Go to step 6.

4. In the DATA LIST, check the output signal of the malfunctioning component.

   Is the output signal OFF?

   YES—Go to step 5.

   NO—Replace the control unit that controls the device that will not turn OFF.■

5. Check the relay, if applicable, then check for a short in the wire between the relay and the component, the relay and control unit, or the component and control unit.

   Are the relay and the wire harness OK?

   YES—Replace the control unit that controls the component that will not turn OFF.■

   NO—Replace the relay or repair the wire harness.■

6. Check the switch, then check for a short in the wire between the switch and the control unit that monitors the switch.

   Is the switch and wire harness OK?

   YES—Replace the control unit that monitors the switch.■

   NO—Replace the switch or repair the wire harness.■

Troubleshooting - B-CAN System Diagnosis Test Mode D

Do this diagnosis if a component that is controlled by the B-CAN system does not run or come on.

NOTE:
- If the component does not turn off or stop, go to B-CAN System Diagnosis Test Mode C (see page 22-94).
- See the B-CAN system unit input/output index for a list of input and output devices and the control units that monitor the input and controls the output devices (see page 22-87).
- Always cycle the ignition switch within 3 seconds when prompted in the DTC troubleshooting procedures in this section.

1. Check the fuse of the malfunctioning output device.

   Is the fuse OK?

   YES—Go to step 2.

   NO—Replace the fuse and recheck. ■

2. Check for DTCs by selecting the TEST MODE menu from the HDS.

   Are any DTCs indicated ?

   YES—Go to B-CAN System Diagnosis Test Mode A (see page 22-92). ■

   NO—Go to step 3.

3. Turn on the switch that controls the malfunctioning component.

4. Select DATA LIST from the TEST MODE menu, and check output signal for the malfunctioning component.

   Is there an output signal?

   YES—Go to step 5.

   NO—Go to step 9.

5. Check the relay and ground, then check for an open or a short in the circuit for the malfunctioning component.

   Are the relay and circuit OK?

   YES—Go to step 6.

   NO—Replace the relay or repair the wire circuit. ■

6. Do the FUNCTION TEST for the malfunctioning component.

   Does the output device pass the function test?

   YES—Go to step 7.

   NO—Replace the component. ■

7. With the malfunctioning output device connected, connect a voltmeter between the malfunctioning output device and body ground on the wire that the control unit uses to control the output device circuit.

8. Select MISC. TEST from the TEST MODE menu, and do the forced operation test of the malfunctioning component.

   Is there a change in voltage (12 V to 0 V or 0 V to 12 V)?

   YES—Replace the component. ■

   NO—Replace the control unit that controls the malfunctioning component. ■

9. Select DATA LIST from the TEST MODE menu, and make sure the switch signal input for the malfunctioning system indicates a change when operated.

   Does the switch input indicated ON when the switch is ON?

   YES—Replace the control unit that controls the malfunctioning component. ■

   NO—Go to step 10.

10. Check the switch and its ground (if applicable), then check for an open or a short in the wire between the switch and the control unit that monitors it.

    Is the switch and the wire harness OK?

    YES—Replace the control unit that monitors the switch. ■

    NO—Replace the switch or repair the wire harness. ■

Troubleshooting - B-CAN System Diagnosis Test Mode 1 and Test Mode 2 (without the HDS)

Special Tools Required
MPCS (MCIC) service connector 07WAZ-001010A

Test Mode 1

Check the PCM for DTCs, and troubleshoot PCM (see page 11-3) or F-CAN loss of communication errors first, then perform this diagnosis if the HDS is not available.

1. Check the No. 23 (10 A) fuse in the under-hood fuse/relay box and No. 10 (7.5 A) fuse in the under-dash fuse/relay box.

   Are the fuses OK?

   YES—Go to step 2.

   NO—Find and repair the cause of the blown fuse.■

2. Remove the left kick panel (see page 20-67).

3. Turn the ignition switch ON (II), and move the ceiling light switch to the middle (door) position.

4. Connect the MPCS service connector (A) to the MCIC socket (B) in the under-dash fuse/relay box.

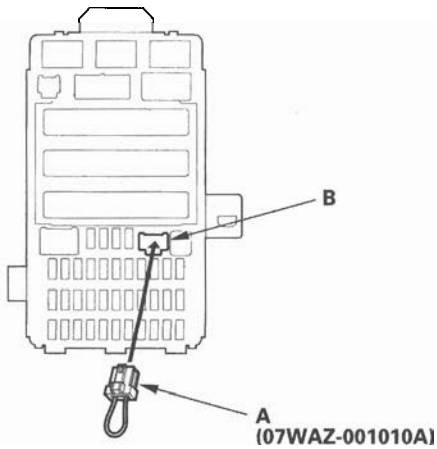

5. Wait 5 seconds, and watch the ceiling light. When the ceiling light flashes quickly once, and then goes off the system is in Test Mode 1.

6. Check for B-CAN DTCs indicated by the gauge control module odometer/trip meter display while still in Test Mode 1. Push the odometer select/reset button to display the next code. After you get to the last code, the display shows END. If no DTCs are stored, the display will read NO.

   Are any DTCs indicated?

   YES—Go to step 7.

   NO—Go to step 10.

7. Record all DTCs and sort them.

8. Troubleshoot the DTCs in this order:

   - Battery voltage DTCs
   - Internal error DTCs
   - Loss of communication DTCs (begin with the lowest number first; for example, if B1008 and B1011 are retrieved, troubleshoot B1008 first)
   - Signal error DTCs

9. Clear the DTCs by pressing and holding the select/reset button for about 13 seconds. You will hear a beep to confirm the code have been cleared. Operate the devices that failed, and recheck for codes.

Test Mode 2

10. Remove the MPCS service connector from the under-dash fuse/relay box socket for 5—10 seconds, then re-insert it to enter Mode 2. When the system enters Mode 2, the ceiling light will flash two times quickly and then go off.

    NOTE: If the MPCS connector is disconnected for too short or too long of a time, or the ignition switch is turned OFF, the system will return to Test Mode 1.

11. The following table lists the circuits that can be checked in Test Mode 2. Operate the switch that is most closely related to the problem. If the circuit is OK, the ceiling light will blink once. If the circuit is faulty, there will be no indication.

MICU

Item
Audio switch
Brake pedal position switch (ON)
Dimmer switch (ON)
Driver's door key cylinder switch (LOCK)*
Driver's door key cylinder switch (UNLOCK)*
Driver's door lock knob switch (LOCK)
Driver's door lock knob switch (UNLOCK)
Driver's door lock switch (LOCK)
Driver's door lock switch (UNLOCK)
Driver's door switch (OPEN)
Front passenger's door lock knob switch (UNLOCK)*
Front passenger's door lock switch (UNLOCK)
Front passenger's door switch (OPEN)
Hazard warning switch (ON)
Headlight switch (OFF)
Headlight switch (ON)
Hood switch (OPEN)**
Ignition key switch (ON)
Left rear door lock knob switch (UNLOCK)*
Left rear door switch (OPEN)
Lighting switch (ON)
Passing switch (ON)
Rear window wiper switch (OFF)
Rear window wiper switch (ON)
Rear window washer switch (ON)
Right rear door lock knob switch (UNLOCK)*
Right rear door switch (OPEN)
Tailgate latch switch (OPEN)
Tailgate outside handle switch
Transmission range switch (P)
Turn signal switch (LEFT)
Turn signal switch (RIGHT)
Windshield washer switch (ON)
Windshield wiper HI/LO switch
Windshield wiper INT/LO switch
Windshield wiper intermittent dwell time controller
Windshield wiper MIST switch

* A second key is necessary to check the key cylinder inputs.
Be sure to rotate the key cylinder switch two times to each position (lock and lock, unlock and unlock) to ensure the door lock knob switch is in the appropriate position.
* *: With security

Does the ceiling light work properly in all switch positions?

YES—Go to function and input test for the system related to the failure. ■

NO—Repair the open, short, or replace the faulty switch. ■

Sleep and Wake-up Mode Test

1. Shift to the sleep mode:
   Turn the ignition switch OFF, and remove the key. If the MICU receives no signals from the inputs listed below, it will go into sleep mode in less than 40 seconds.

Driver's door lock switch (LOCK or UNLOCK)
Driver's door key cylinder switch (LOCK or UNLOCK)
Front passenger's door lock switch (LOCK or UNLOCK)
Tailgate latch switch (tailgate closed)
Tailgate outer handle switch
Hazard warning switch (OFF)

2. Confirm the sleep mode:
   Check for voltage on the B-CAN communication line; there should be battery voltage in the sleep mode. Check the parasitic draw at the battery while shifting into the sleep mode; amperage should change from about 200 mA to less than 35 mA.

3. Shift to the wake up mode:
   When the ignition switch is turned ON (II), the MICU, gauge control module, immobilizer-keyless control unit-receiver, and PCM wake up at the same time without "talking" to each other through the communication lines. When any switch in the multiplex integrated control system is turned on, it wakes up its related control unit which, in turn, wakes up the other units. After confirming the sleep mode, look in the following table for the switch most related to the problem. Operate that switch and see if its control unit wakes up.

   NOTE: If any control unit is faulty and will not wake up, several circuits in the system will malfunction at the same time. The MICU is followed by a list of the switches and input signals that can wake it up.

Door switches (door open)
Driver's door lock switch (LOCK or UNLOCK)
Driver's door lock knob switch (LOCK or UNLOCK)
Driver's door key cylinder switch (LOCK or UNLOCK)
Front passenger's door lock switch (LOCK or UNLOCK)
Front passenger's door lock knob switch (UNLOCK)
Left rear door lock knob switch
Right rear door lock knob switch
Tailgate latch switch (tailgate open)
Tailgate outer handle switch
Hood switch (with security) (hood open)
Hazard warning switch (ON)
Combination light switch (parking, headlight, dimmer, passing ON)
Ignition key switch (key inserted)

Circuit Diagram

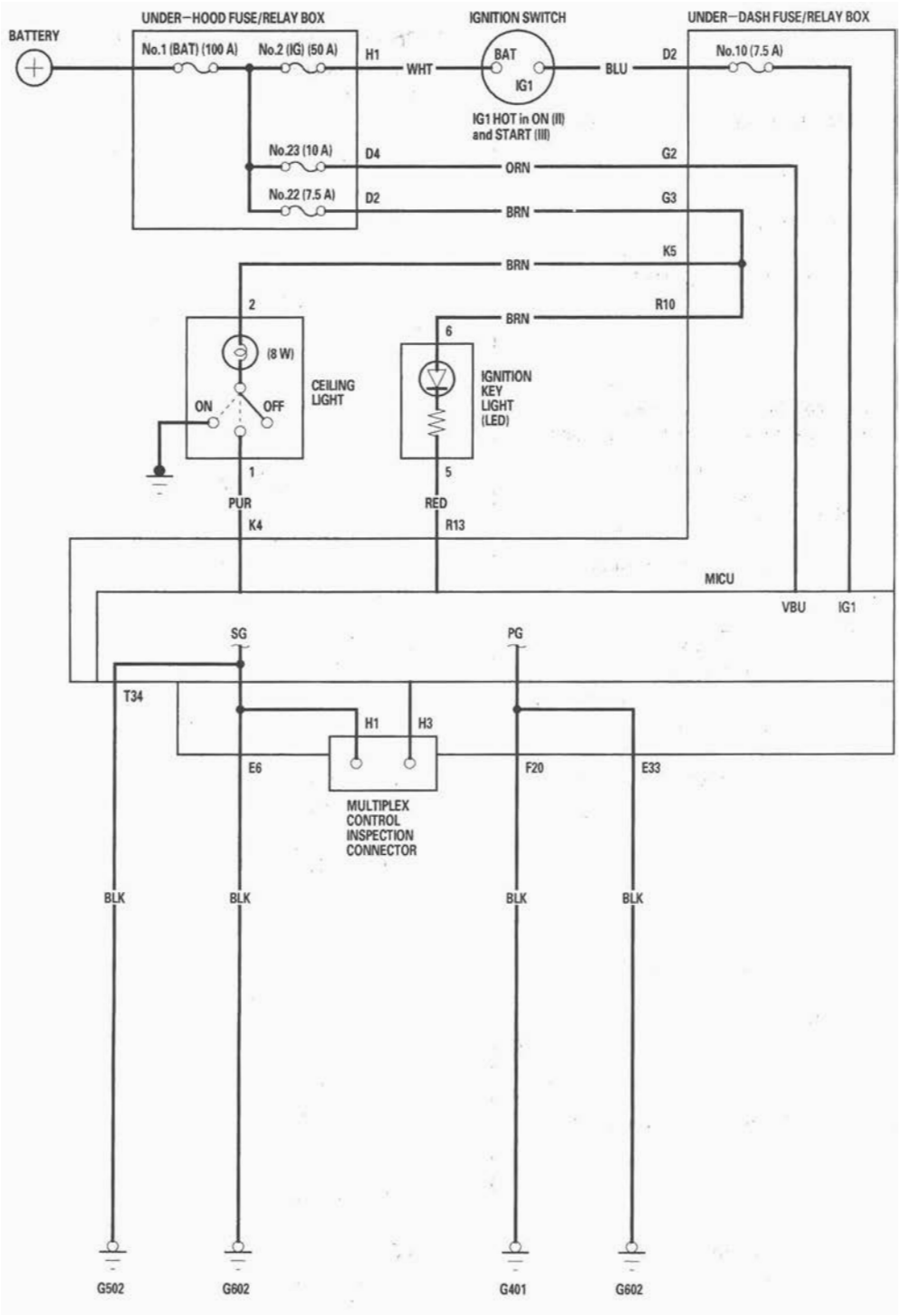

DTC Troubleshooting

DTC B1000: Communication Bus Line Error (Bus-off)

1. Clear the DTCs with the HDS.
2. Turn the ignition switch OFF, and then back ON (II).
3. Wait for 6 seconds or more.
4. Check for DTCs with the HDS.

   Is DTCs B1000 and/or B1008 and B1011 indicated?

   YES—Go to step 5.

   NO—Intermittent failure, the communication bus line is OK at this time. Check for poor connections or shorted wires. ■
5. Turn the ignition switch OFF.
6. Disconnect the appropriate connector at each control unit in the table.

Unit	Connector
MICU	Under-dash fuse/relay box connector Q (16P)
Gauge control module	36P connector
Immobilizer-keyless control unit	7P connector

7. Turn the ignition switch ON (II).
8. Clear the DTCs with the HDS.
9. Turn the ignition switch OFF, and then back ON (II).
10. Wait for 6 seconds or more.
11. Check for DTCs with the HDS.

    Is DTCs B1000 and/or B1008, B1011, and B1032 indicated?

    YES—Go to step 12.

    NO—Faulty MICU; replace the under-dash fuse/relay box (see page 22-64). ■
12. Turn the ignition switch OFF.
13. Check for continuity between the under-dash fuse/relay box connector Q (16P) No. 6 terminal and body ground.

UNDER-DASH FUSE/RELAY BOX CONNECTOR Q (16P)

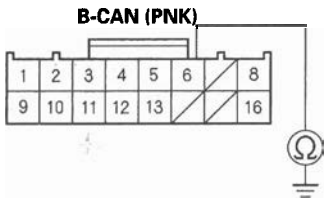

Wire side of female terminals

Is there continuity?

YES—Repair a short to ground in the wire between the under-dash fuse/relay box and the affected control unit. ■

NO—Go to step 14.

14. Turn the ignition switch ON (II).
15. Measure voltage between the under-dash fuse/relay box connector Q (16P) No. 6 terminal and body ground.

UNDER-DASH FUSE/RELAY BOX CONNECTOR Q (16P)

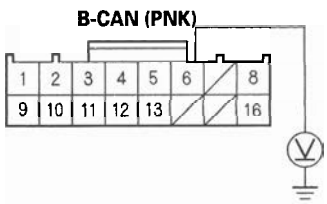

Wire side of female terminals

Is there voltage?

YES—Repair the short to power in the wire between the under-dash fuse/relay box and the affected control unit. ■

NO—Go to step 16.

16. Turn the ignition switch OFF.
17. Reconnect the under-dash fuse/relay box connector Q (16P).
18. Reconnect the gauge control module 36P connector.
19. Turn the ignition switch ON (II).
20. Clear the DTCs with the HDS.
21. Turn the ignition switch OFF, and then back ON (II).
22. Wait for 6 seconds or more.
23. Check for DTCs with the HDS.

    Is DTC B1000 and/or B1008, B1011, and B1032 indicated?

    YES—Replace the gauge control module (see page 22-248). ■

    NO—Replace the immobilizer-keyless control unit. ■

DTC B1001: MICU Internal Error (CPU)

NOTE: If you are troubleshooting multiple DTCs, be sure to follow the instructions in B-CAN System Diagnosis Test Mode A (see page 22-92).

1. Clear the DTCs with the HDS.
2. Turn the ignition switch OFF, and then back ON (II).
3. Wait for 6 seconds or more.
4. Check for DTCs with the HDS.

   Is DTC B1001 indicated?

   YES—Faulty MICU; replace the under-dash fuse/relay box (see page 22-64). ■

   NO—Intermittent failure, the MICU is OK at this time. Check for loose or poor connections. If the connections are good, check the battery condition (see page 22-65) and the charging system. ■

DTC Troubleshooting (cont'd)

DTC B1002: MICU Internal Error (EEPROM)

NOTE: If you are troubleshooting multiple DTCs, be sure to follow the instructions in B-CAN System Diagnosis Test Mode A (see page 22-92).

1. Clear the DTCs with the HDS.
2. Turn the ignition switch OFF, and then back ON (II).
3. Wait for 6 seconds or more.
4. Check for DTCs with the HDS.

   Is DTC B1002 indicated?

   YES—Faulty MICU; replace the under-dash fuse/relay box (see page 22-64). ■

   NO—Intermittent failure, the MICU is OK at this time. Check for loose or poor connections. If the connections are good, check the battery condition (see page 22-65) and the charging system. ■

DTC B1008: MICU Lost Communication with the Gauge Control Module (A/T Message)

DTC B1011: MICU Lost Communication with the Gauge Control Module (VSP/NE Message)

NOTE:
- If you are troubleshooting multiple DTCs, be sure to follow the instructions in B-CAN System Diagnosis Test Mode A (see page 22-92).
- Before troubleshooting, check the No. 23 (10 A) fuse in the under-hood fuse/relay box and No. 10 (7.5 A) fuse in the under-dash fuse/relay box.

1. Clear the DTCs with the HDS.
2. Turn the ignition switch OFF, and then back ON (II).
3. Wait for 6 seconds or more.
4. Check for DTCs with the HDS.

   Is DTCs B1008 and/or B1011 indicated?

   YES—Go to step 5.

   NO—Intermittent failure, the gauge control module is OK at this time. Check for loose or poor connections between the gauge control module and the under-dash fuse/relay box connector Q (16P). If the connections are good, check the battery condition (see page 22-65) and the charging system. ■

5. Select the UNIT INFORMATION from the BODY ELECTRICAL system select menu, then enter the CONNECTED UNIT.
6. Check the condition of the gauge control module in the CONNECTED UNIT list.

   Is NOT AVAILABLE indicated?

   YES—Go to step 7.

   NO—Replace the gauge control module. (see page 22-248). ■

7. Measure voltage between gauge control module 36P connector terminals No. 15 and No. 18, and between terminals No. 19 and No. 36.

GAUGE CONTROL MODULE 36P CONNECTOR

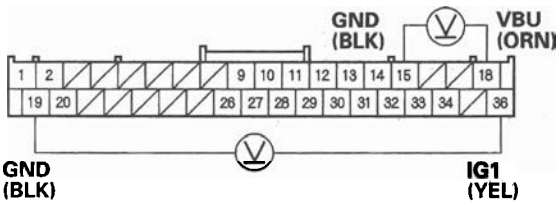

Wire side of female terminals

Is there battery voltage?

YES—Go to step 8.

NO—Repair an open in the wire. ■

8. Turn the ignition switch OFF.

9. Disconnect the gauge control module 36P connector.

10. Disconnect the under-dash fuse/relay box connector Q (16P).

11. Check for continuity between the under-dash fuse/relay box connector Q (16P) No. 6 terminal and gauge control module 36P connector No. 20 terminal.

GAUGE CONTROL MODULE 36P CONNECTOR
Wire side of female terminals

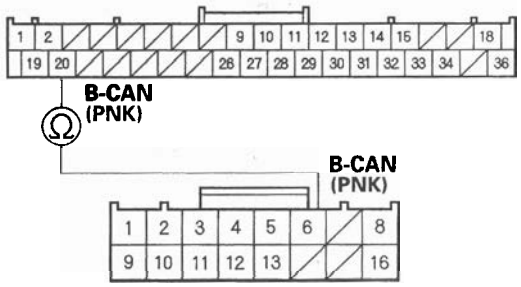

UNDER-DASH FUSE/RELAY BOX CONNECTOR Q (16P)
Wire side of female terminals

Is there continuity?

YES—Replace the gauge control module (see page 22-248). ■

NO—Repair an open in the wire between the MICU and the gauge control module. ■

DTC Troubleshooting (cont'd)

DTC B1150 and B1900: Communication Bus Line Error (Bus-off)

1. Clear the DTCs with the HDS.
2. Turn the ignition switch OFF, and then back ON (II).
3. Wait for 6 seconds or more.
4. Check for DTCs with the HDS.

   Are DTC B1000, B1008, B1011, and B1032 also indicated with DTCs B1150 and B1900?

   YES—Go to DTC B1000 troubleshooting.■

   NO—Intermittent failure, the system is OK at this time.■

DTC B1032: MICU Lost Communication with the SRS Unit (CDS Message)

NOTE: If you are troubleshooting multiple DTCs, be sure to follow the instructions in B-CAN System Diagnosis Test Mode A (see page 22-92).

1. Clear the DTCs with the HDS.
2. Turn the ignition switch OFF, and then back ON (II).
3. Wait for 6 seconds or more.
4. Check for DTCs with the HDS.

   Is DTC B1032 indicated?

   YES—Go to step 5.

   NO—Intermittent failure, the gauge control module is OK at this time. Check for loose or poor connections at the gauge control module 36P connector and the under-dash fuse/relay box connector Q (16P). If the connections are good, check the battery condition (see page 22-65) and the charging system.■

5. Check for DTCs with the HDS.

   Are DTCs B1008 and B1011 also indicated with DTC B1032?

   YES—Check for an open in the communication circuit between the MICU and the gauge control module. If the circuit is bad, repair the open.■

   NO—Do the gauge control module input test (see page 22-245).■

DTC B1036: IG1 Line Input Error

NOTE: If you are troubleshooting multiple DTCs, be sure to follow the instructions in B-CAN System Diagnosis Test Mode A (see page 22-92).

1. Clear the DTCs with the HDS.
2. Turn the ignition switch OFF, and then back ON (II).
3. Wait for 6 seconds or more.
4. Check for DTCs with the HDS.

   Is DTC B1036 indicated?

   YES—Go to step 5.

   NO—Intermittent failure, the system is OK at this time. Check for loose or poor connection at the gauge control module 36P connector and the under-dash fuse/relay box connector Q (16P). If the connections are good, check the battery condition (see page 22-65) and the charging system. ■
5. Check for DTCs with the HDS.

   Is DTC B1008 indicated with DTC B1036?

   YES—Go to DTC B1008 troubleshooting. ■

   NO—Go to step 6.
6. Turn the ignition switch OFF.
7. Turn the ignition switch ON (II).
8. Measure voltage between the gauge control module 36P connector No. 36 terminal and body ground.

GAUGE CONTROL MODULE 36P CONNECTOR

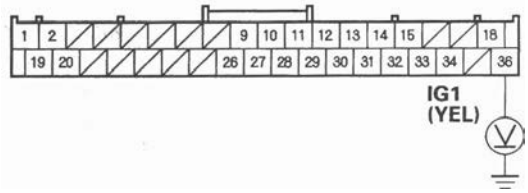

Wire side of female terminals

Is there battery voltage?

YES—Faulty MICU or an open in the under-dash fuse/relay box internal circuit. Substitute a known-good under-dash fuse/relay box and recheck. ■

NO—Check No. 10 (7.5 A) fuse in the under-dash fuse/relay box. If the fuse is OK, check for an open in the wire between the under-dash fuse/relay box and the gauge control module, or repair a short in the wire between the under-dash fuse/relay box and the gauge control module. ■

MICU Input Test

NOTE: Before testing, troubleshoot the B-CAN System Diagnosis Test Mode A (see page 22-92).

1. Turn the ignition switch OFF.
2. Disconnect the under-dash fuse/relay box connectors E, F, G, K, R, and T.

   NOTE: All connector views are wire side of female terminals.

UNDER-DASH FUSE/RELAY BOX CONNECTOR E (42P)

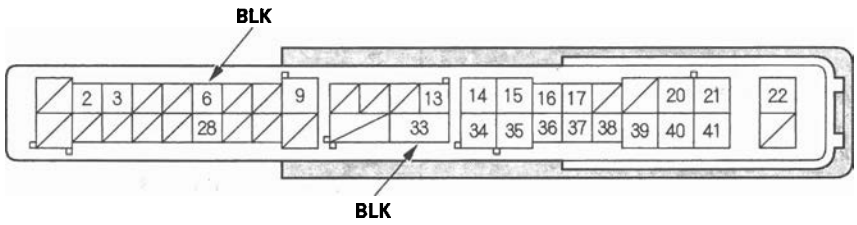

UNDER-DASH FUSE/RELAY BOX CONNECTOR F (34P)

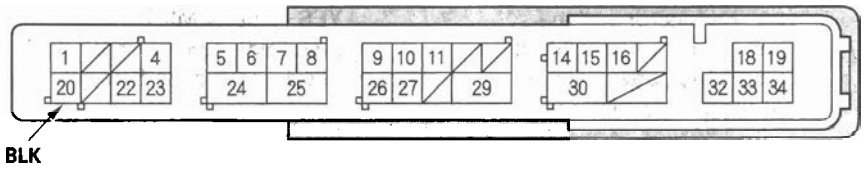

UNDER-DASH FUSE/RELAY BOX CONNECTOR G (21P)

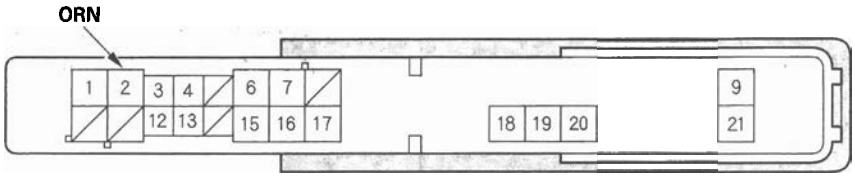

UNDER-DASH FUSE/RELAY BOX CONNECTOR K (8P)

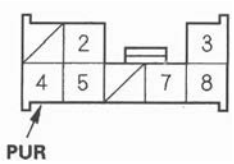

UNDER-DASH FUSE/RELAY BOX CONNECTOR R (20P)

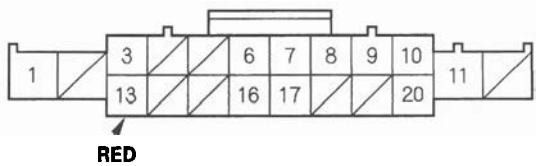

UNDER-DASH FUSE/RELAY BOX CONNECTOR T (34P)

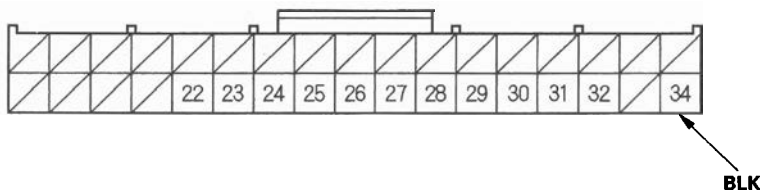

3. Inspect the connector and socket terminals to be sure they are all making good contact.

   • If the terminals are bent, loose or corroded, repair them as necessary and recheck the system.
   • If the terminals look OK, go to step 4.

4. With the connector still disconnected, make these input tests at the appropriate connector.

   • If any test indicates a problem, find and correct the cause, then recheck the system.
   • If all the input tests prove OK, go to step 5.

Cavity	Wire	Test condition	Test: Desired result	Possible cause if result is not obtained
G2	ORN	Under all conditions	Check for voltage to ground: There should be battery voltage.	• Blown No. 23 (10 A) fuse in the under-hood fuse/relay box • An open in the wire
K4	PUR	Under all conditions (All doors are closed and the ceiling light in the door position.)	Attach to ground: The ceiling light should come on.	• Blown No. 22 (7.5 A) fuse in the under-hood fuse/relay box • Blown bulb(s) • Faulty ceiling light • An open in the wire
R13	RED	Under all conditions	Attach to ground: The ignition key light should come on.	• Blown No. 22 (7.5 A) fuse in the under-hood fuse/relay box • Faulty LED • An open in the wire

5. Reconnect the connectors to the under-dash fuse/relay box, and make these input tests at the connectors.

   • If any test indicates a problem, find and correct the cause, then recheck the system.
   • If all the input tests prove OK, the MICU must be faulty; replace the under-dash fuse/relay box (see page 22-64).

Cavity	Wire	Test condition	Test: Desired result	Possible cause if result is not obtained
E6	BLK	Under all conditions	Check for voltage to ground: There should be less than 0.5 V.	• Poor ground (G602) • An open in the wire
E33	BLK	Under all conditions	Check for voltage to ground: There should be less than 0.5 V.	• Poor ground (G602) • An open in the wire
F20	BLK	Under all conditions	Check for voltage to ground: There should be less than 0.5 V.	• Poor ground (G401) • An open in the wire
T34	BLK	Under all conditions	Check for voltage to ground: There should be less than 0.5 V.	• Poor ground (G502) • An open in the wire

Component Location Index

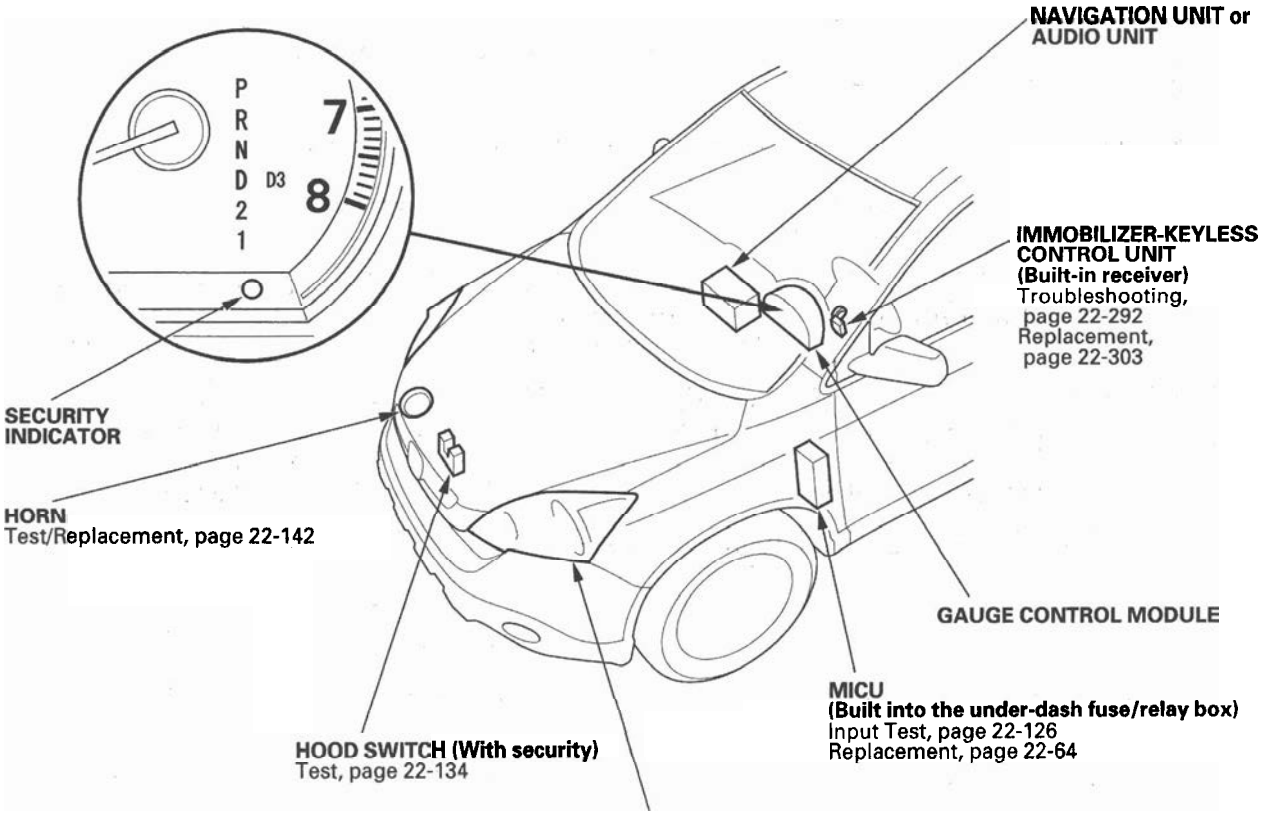

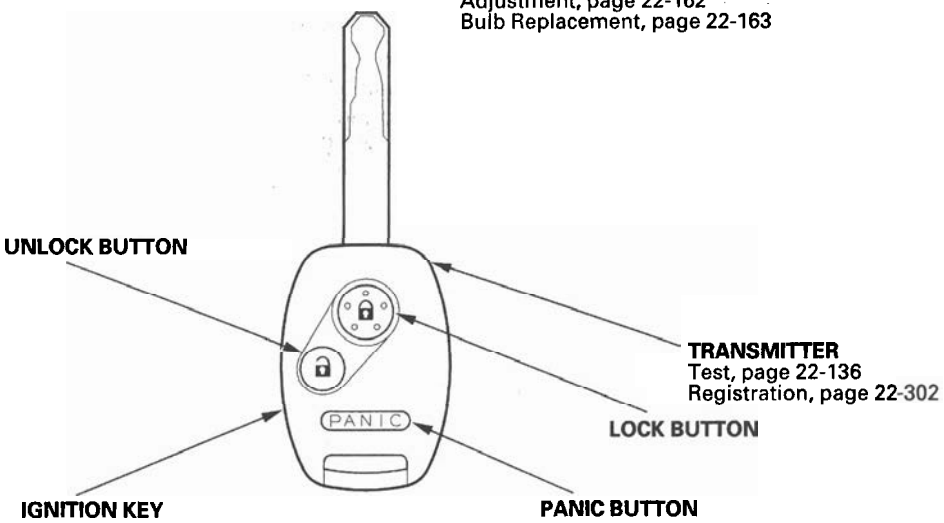

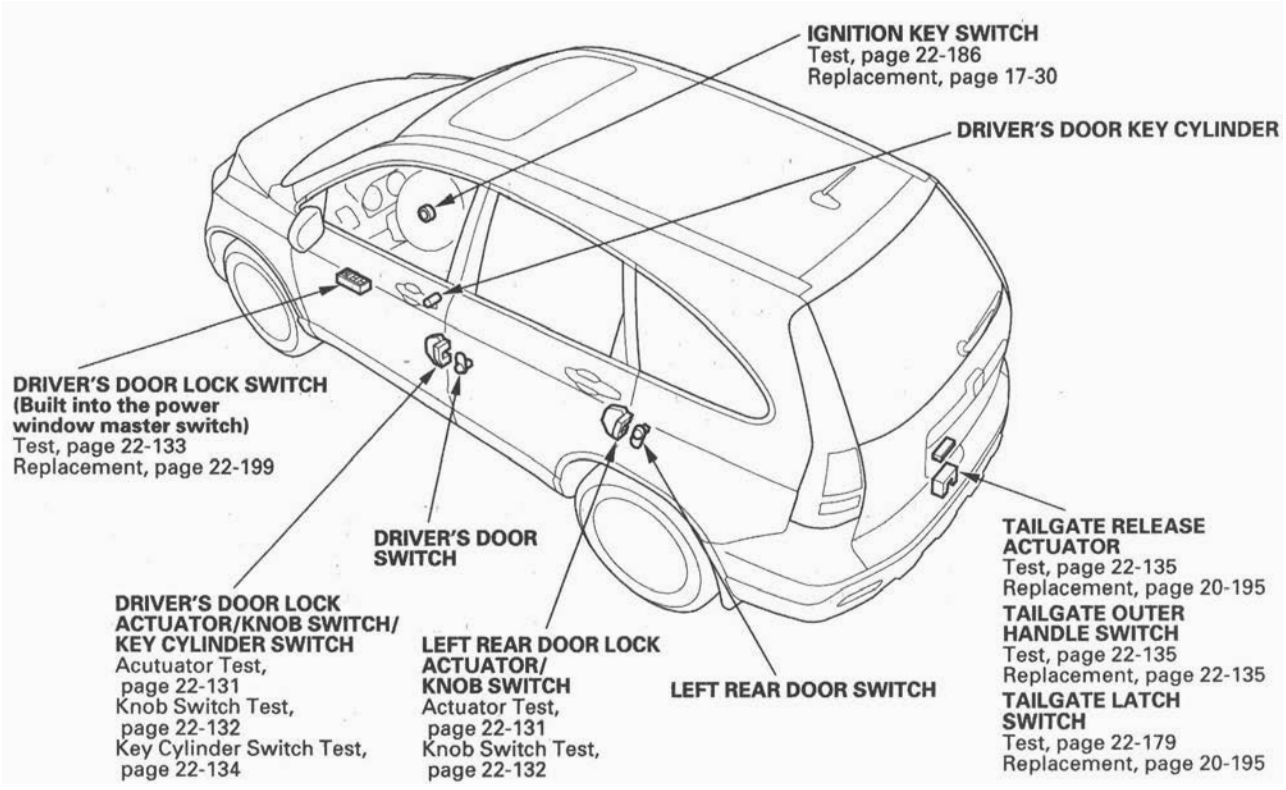
IGNITION KEY SWITCH
Test, page 22-186
Replacement, page 17-30
DRIVER'S DOOR KEY CYLINDER
DRIVER'S DOOR LOCK SWITCH
(Built into the power window master switch)
Test, page 22-133
Replacement, page 22-199
DRIVER'S DOOR SWITCH
TAILGATE RELEASE ACTUATOR
Test, page 22-135
Replacement, page 20-195
TAILGATE OUTER HANDLE SWITCH
Test, page 22-135
Replacement, page 22-135
TAILGATE LATCH SWITCH
Test, page 22-179
Replacement, page 20-195
DRIVER'S DOOR LOCK ACTUATOR/KNOB SWITCH/ KEY CYLINDER SWITCH
Acutuator Test, page 22-131
Knob Switch Test, page 22-132
Key Cylinder Switch Test, page 22-134
LEFT REAR DOOR LOCK ACTUATOR/ KNOB SWITCH
Actuator Test, page 22-131
Knob Switch Test, page 22-132
LEFT REAR DOOR SWITCH

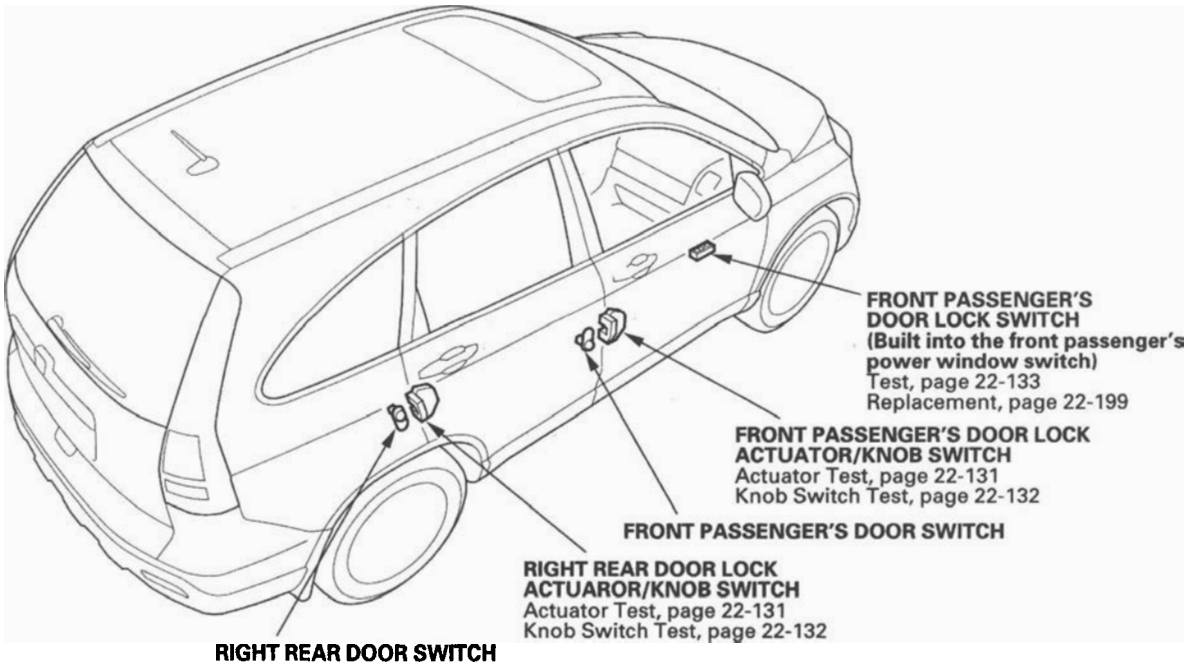
FRONT PASSENGER'S DOOR LOCK SWITCH
(Built into the front passenger's power window switch)
Test, page 22-133
Replacement, page 22-199
FRONT PASSENGER'S DOOR LOCK ACTUATOR/KNOB SWITCH
Actuator Test, page 22-131
Knob Switch Test, page 22-132
FRONT PASSENGER'S DOOR SWITCH
RIGHT REAR DOOR LOCK ACTUAROR/KNOB SWITCH
Actuator Test, page 22-131
Knob Switch Test, page 22-132
RIGHT REAR DOOR SWITCH

System Description

Security Alarm System

NOTE: This applies to EX and EX-L models.

The security alarm system is armed automatically after the doors, hood, and tailgate are closed and locked. For the system to arm, the ignition switch must be off, the key must be removed from the ignition switch, and the MICU must receive signals that the doors, hood, and tailgate are closed and locked. The alarm can be disarmed at any time by unlocking the driver's door with the key or pressing the UNLOCK button on the transmitter.

When everything is closed and locked, the only inputs that are grounded, and have 0 V, are the driver's door lock knob switch (LOCK position), and the audio unit or navigation unit (if equipped). In other words, all of the other switches are open, and have about 10 to 12 V, including the key cylinder switches. The security indicator in the gauge control module begins to flash immediately after the vehicle is completely closed and locked, and 15 seconds later, the security system arms. If the security indicator does not flash, the system is not arming. A beep sounds and the parking lights flash to confirm the security alarm system is armed if the LOCK button is pressed a second time within 5 seconds.

If one of the switches is misadjusted or shorted internally, or there is a short in the circuit, the security system will not arm. As long as the control unit continues to receive a ground signal (0 V), it senses that the vehicle is not closed and locked, and the system will not arm. A switch that is slightly misadjusted can cause the alarm to sound for no apparent reason. In this case, a significant change in outside air temperature, the vibration of a passing truck, or someone bumping into the vehicle could cause the alarm to sound. There is no glass breakage or motion detector feature.

If anything is opened or improperly unlocked after the system is armed, the control unit receives a ground signal from that switch, and the 10 to 12 V reference drops to 0 V. If the audio unit or navigation unit (if equipped) is disconnected, the input loses its ground, and the input voltage goes to 10 to 12 V. The system sounds the alarm when any of these occur:

- A door or the tailgate is forced open.
- A door is unlocked without using the key or the transmitter.
- The hood is opened.
- The audio unit or navigation unit (if equipped) is disconnected.
- The transmitter PANIC button is pressed.

When the system sounds the alarm, the horn sounds and the exterior lights flash for 2 minutes. The alarm can be stopped at any time by unlocking the driver's door with the key or by pressing any button on the transmitter.

Panic Mode

The panic mode sounds the alarm in order to attract attention. When the PANIC button on the transmitter is pressed and held for 2 seconds, the horn sounds and the exterior lights flash for about 20 seconds.

The panic mode can be cancelled at anytime by pressing any button on the transmitter or by turning the ignition switch ON (II). The panic mode will not function if the ignition switch is ON (II).

Keyless Entry System

The keyless entry system is integrated with the multiplex integrated control system. The multiplex integrated control unit (MICU) receives LOCK, UNLOCK and PANIC signals from the immobilizer-keyless control unit (keyless receiver).

The keyless entry system allows you to lock and unlock the vehicle with the transmitter. When you press the LOCK button, all doors lock. When you press the UNLOCK button once, only the driver's door unlocks. The other doors will unlock when you press the button a second time. The doors will not lock with the transmitter if a door is not fully closed, or if the key is in the ignition switch.

When the switch for the ceiling light is in the center (DOOR) position, it will come on when the UNLOCK button is pressed. If a door is not opened, the light will go off and the doors will relock in about 30 seconds. If the doors are locked with the transmitter within 30 seconds, the light will go off immediately.

Circuit Diagram

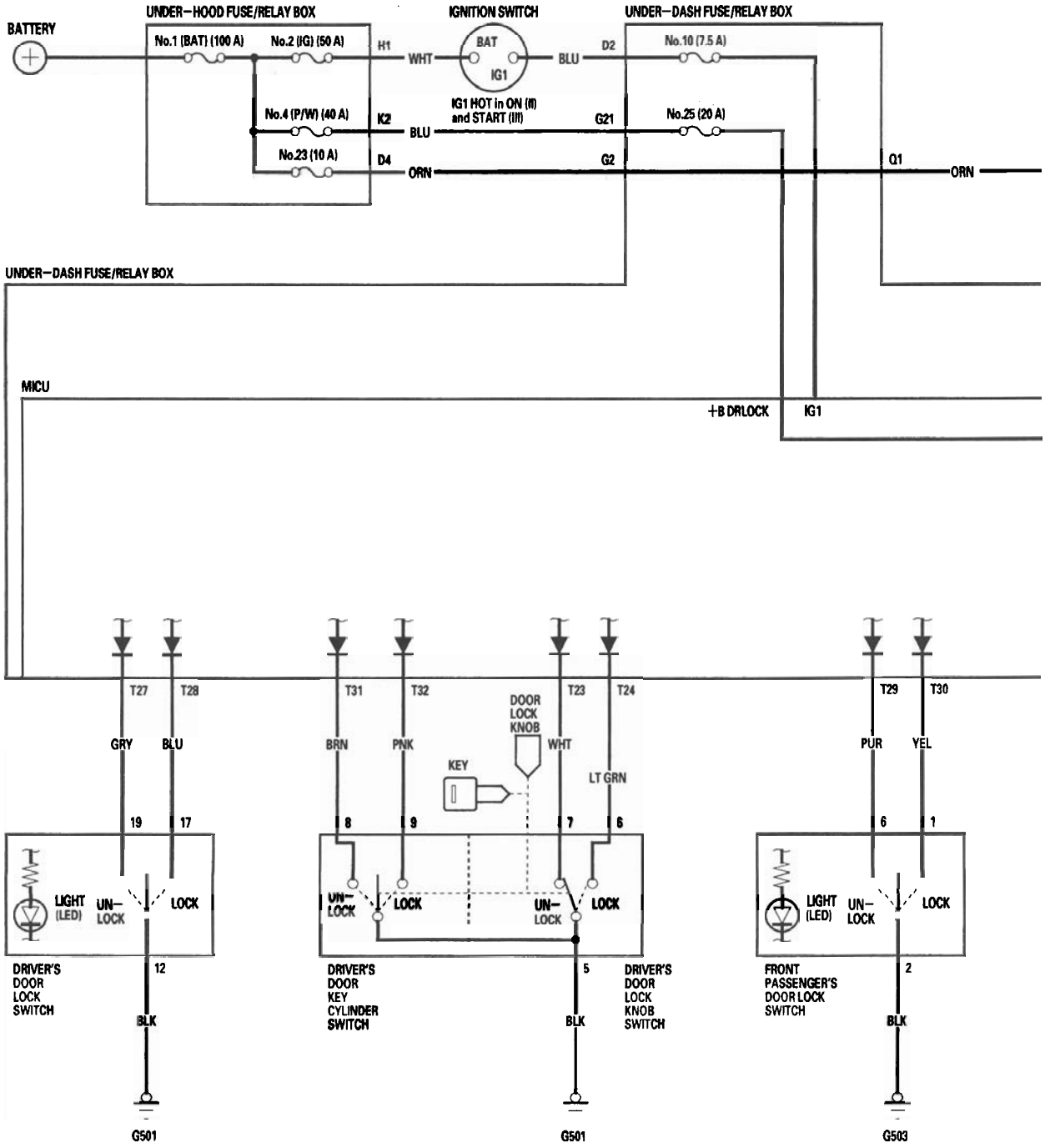

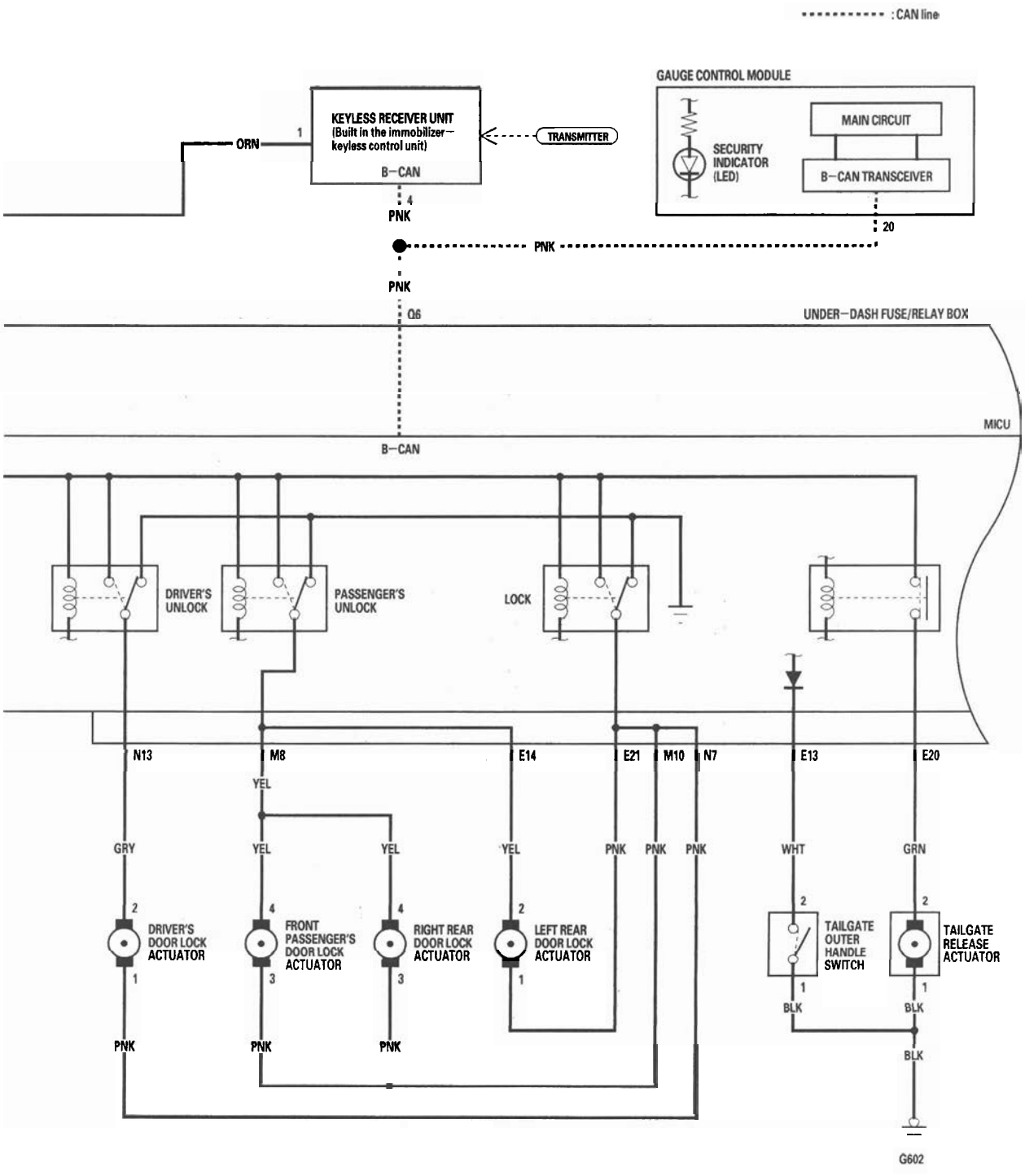
: CAN line
GAUGE CONTROL MODULE
KEYLESS RECEIVER UNIT
(Built in the immobilizer—keyless control unit)
B—CAN
TRANSMITTER
ORN
1
4
PNK
SECURITY INDICATOR (LED)
MAIN CIRCUIT
B—CAN TRANSCEIVER
20
PNK
PNK
Q6
UNDER—DASH FUSE/RELAY BOX
MICU
B—CAN
DRIVER'S UNLOCK
PASSENGER'S UNLOCK
LOCK
N13
M8
E14
E21
M10
N7
E13
E20
YEL
GRY
YEL
YEL
YEL
PNK
PNK
PNK
WHT
GRN
DRIVER'S DOOR LOCK ACTUATOR
FRONT PASSENGER'S DOOR LOCK ACTUATOR
RIGHT REAR DOOR LOCK ACTUATOR
LEFT REAR DOOR LOCK ACTUATOR
TAILGATE OUTER HANDLE SWITCH
TAILGATE RELEASE ACTUATOR
BLK
BLK
BLK
G602

(cont'd)

Circuit Diagram (cont'd)

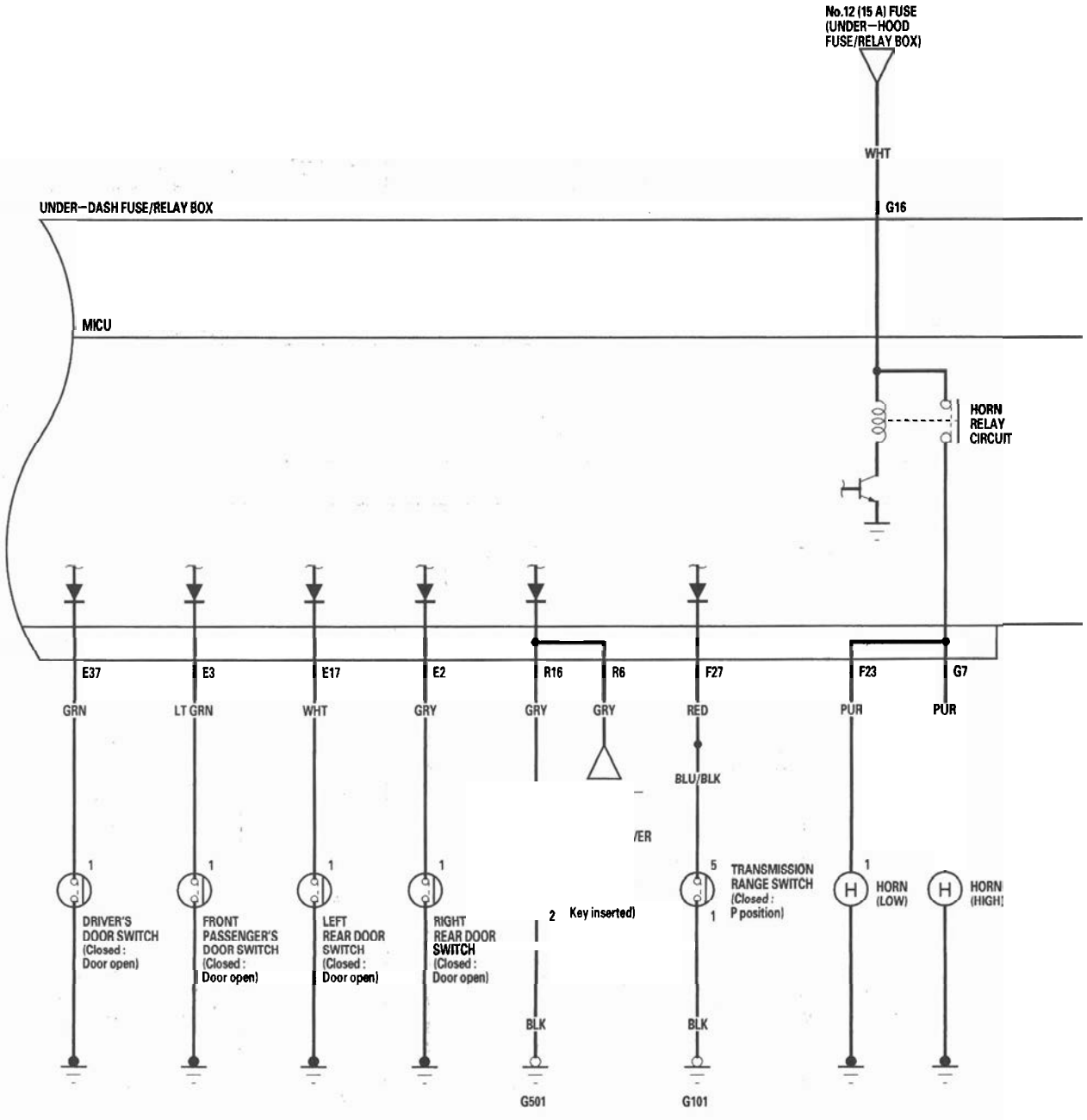

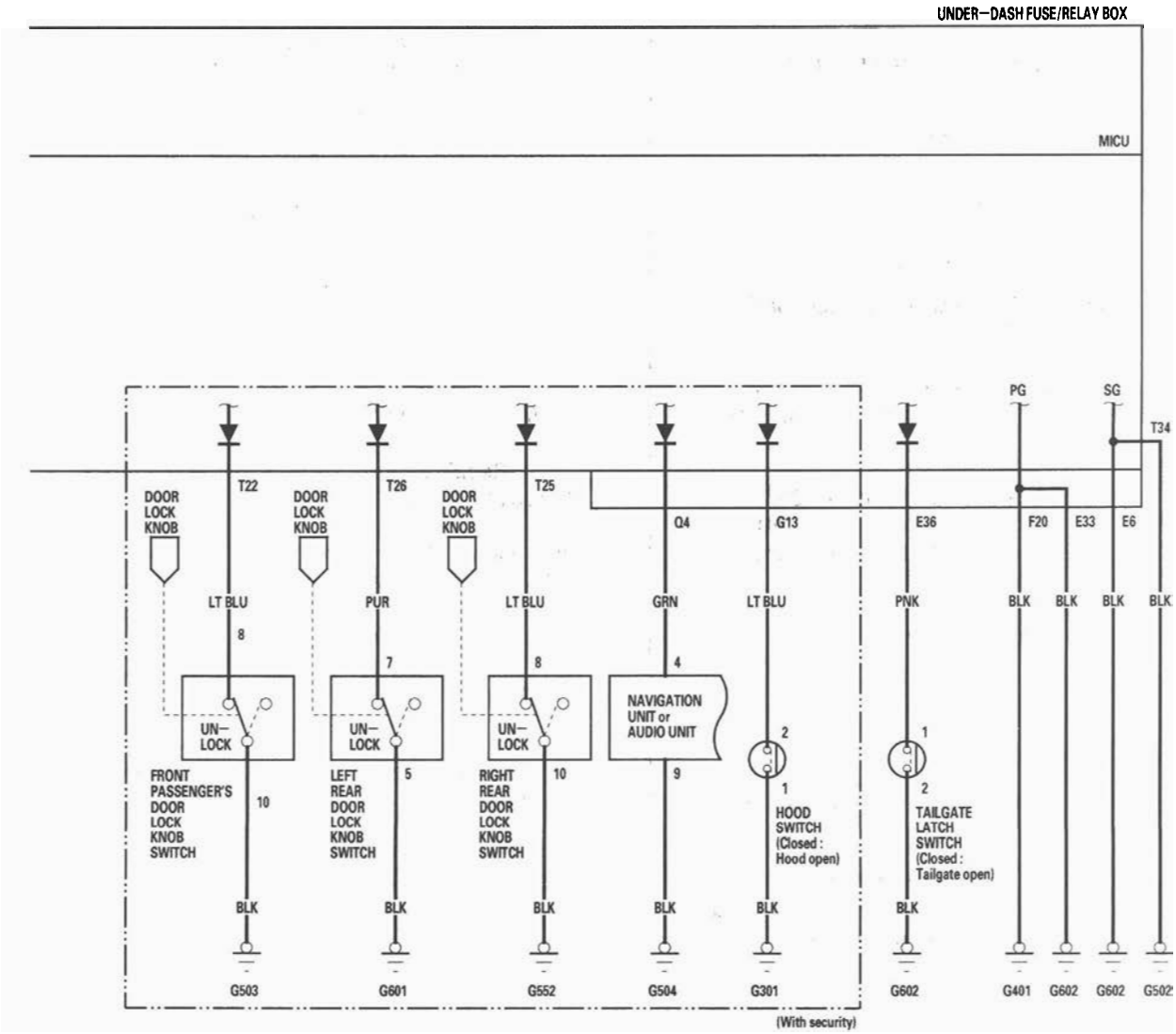
UNDER–DASH FUSE/RELAY BOX
MICU
PG
SG
T34
DOOR LOCK KNOB
T22
T26
T25
Q4
G13
E36
F20
E33
E6
LT BLU
PUR
LT BLU
GRN
LT BLU
PNK
BLK
BLK
BLK
BLK
8
7
8
4
2
1
1
2
UN–LOCK
NAVIGATION UNIT or AUDIO UNIT
FRONT PASSENGER'S DOOR LOCK KNOB SWITCH
LEFT REAR DOOR LOCK KNOB SWITCH
RIGHT REAR DOOR LOCK KNOB SWITCH
HOOD SWITCH (Closed : Hood open)
TAILGATE LATCH SWITCH (Closed : Tailgate open)
10
5
10
9
BLK
G503
G601
G552
G504
G301
G602
G401
G602
G602
G502
(With security)

DTC Troubleshooting

DTC B1026: Front Passenger's Door Lock Switch Signal Error (LOCK/UNLOCK)

NOTE: If you are troubleshooting multiple DTCs, be sure to follow the instructions in B-CAN System Diagnosis Test Mode A (see page 22-92).

1. Clear the DTCs with the HDS.
2. Turn the ignition switch OFF, and then back ON (II).
3. Operate the front passenger's door lock switch several times.
4. Check for DTCs with the HDS.

   Is DTC B1026 indicated?

   YES—Go to step 5.

   NO—Intermittent failure, the front passenger's door lock system is OK at this time. ■
5. With the front passenger's door lock switch in the neutral position, select SECURITY from the HDS and enter the DATA LIST.
6. Check the ON/OFF information of the FRONT PASSENGER'S DOOR LOCK SWITCH (LOCK) and FRONT PASSENGER'S DOOR LOCK SWITCH (UNLOCK) in the DATA LIST.

   Are both information indicators OFF?

   YES—Go to step 12.

   NO—Go to step 7.
7. Disconnect the front passenger's power window switch 8P connector.
8. Check the ON/OFF information of the FRONT PASSENGER'S DOOR LOCK SWITCH (LOCK) and FRONT PASSENGER'S DOOR LOCK SWITCH (UNLOCK) in the DATA LIST.

   Are both information indicators OFF?

   YES—Faulty door lock switch; replace the front passenger's power window switch. ■

   NO—Go to step 9.
9. Turn the ignition switch OFF.
10. Disconnect the under-dash fuse/relay box connector T (34P).
11. Check for continuity between the No. 1 (LOCK) and No. 6 (UNLOCK) terminals of the front passenger's power window switch 8P connector and body ground.

FRONT PASSENGER'S POWER WINDOW SWITCH 8P CONNECTOR

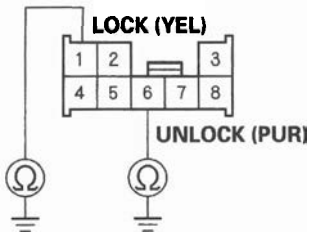

Wire side of female terminals

Is there continuity?

YES—Repair a short to ground in the LOCK or UNLOCK wire. ■

NO—Faulty MICU; replace the under-dash fuse/relay box (see page 22-64). ■

12. Turn the ignition switch OFF.
13. Disconnect the front passenger's power window switch 8P connector.
14. Disconnect under-dash fuse/relay box connector T (34P).

15. Check for continuity between the No. 1 (LOCK) and No. 6 (UNLOCK) terminals of the front passenger's power window switch 8P connector.

FRONT PASSENGER'S POWER WINDOW SWITCH 8P CONNECTOR



Wire side of female terminals

Is there continuity?

YES—Repair a short between the LOCK and UNLOCK wires. ■

NO—Substitute a known-good passenger's power window switch, and recheck. If the symptom/indication goes away, replace the original passenger's power window switch. If not, the MICU is faulty, replace the under-dash fuse/relay box (see page 22-64). ■

DTC Troubleshooting (cont'd)

DTC B1127: Driver's Door Key Cylinder Switch Signal Error (LOCK/UNLOCK)

NOTE: If you are troubleshooting multiple DTCs, be sure to follow the instructions in B-CAN System Diagnosis Test Mode A (see page 22-92).

1. Clear the DTCs with the HDS.
2. Turn the ignition switch OFF, and then back ON (II).
3. Insert the ignition key into the driver's door key cylinder switch, and turn the key in LOCK and UNLOCK positions ten times.
4. Check for DTCs with the HDS.

   Is DTC B1127 indicated?

   YES—Go to step 5.

   NO—Intermittent failure, the driver's door key cylinder switch system is OK at this time. ■
5. With the driver's door key cylinder in the neutral position, select KEYLESS with the HDS, and enter the DATA LIST.
6. Check the ON/OFF information of the DRIVER'S DOOR KEY CYLINDER SWITCH (LOCK) and DRIVER'S DOOR KEY CYLINDER SWITCH (UNLOCK) in the DATA LIST.

   Are both information indicators OFF?

   YES—Go to step 12.

   NO—Go to step 7.
7. Disconnect the driver's door lock actuator 10P connector.
8. Check the ON/OFF information of the DRIVER'S DOOR KEY CYLINDER SWITCH (LOCK) and DRIVER'S DOOR KEY CYLINDER SWITCH (UNLOCK) in the DATA LIST.

   Are both information indicators OFF?

   YES—Faulty driver's door key cylinder switch; replace the driver's door lock actuator. ■

   NO—Go to step 9.
9. Turn the ignition switch OFF.
10. Disconnect the under-dash fuse/relay box connector T (34P).
11. Check for continuity between the No. 31 (UNLOCK) and No. 32 (LOCK) terminals of the under-dash fuse/relay box connector T (34P) and body ground.

UNDER-DASH FUSE/RELAY BOX CONNECTOR T (34P)

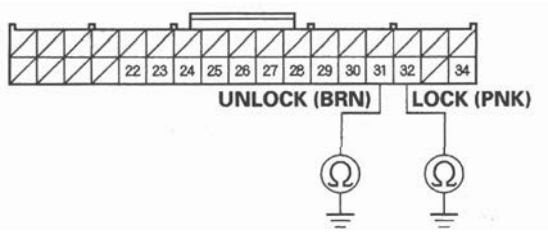

Wire side of female terminals

Is there continuity?

YES—Repair a short to ground in the LOCK and UNLOCK wire. ■

NO—Faulty MICU; replace the under-dash fuse/relay box (see page 22-64). ■

12. Turn the ignition switch OFF.
13. Disconnect the driver's door lock actuator 10P connector.
14. Disconnect under-dash fuse/relay box connector T (34P).

15. Check for continuity between the No. 31 (UNLOCK) and No. 32 (LOCK) terminals of the under-dash fuse/relay box connector T (34P).

UNDER-DASH FUSE/RELAY BOX CONNECTOR T (34P)

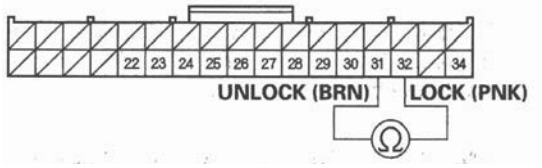

Wire side of female terminals

Is there continuity?

YES—Repair a short between the LOCK and UNLOCK wires. ■

NO—Substitute a known-good MICU, and recheck. If the symptom/indication goes away, the original MICU is faulty; replace the under-dash fuse/relay box (see page 22-64), if not, replace the driver's door lock actuator. ■

DTC B1128: Driver's Door Lock Switch Signal Error (LOCK/UNLOCK)

NOTE: If you are troubleshooting multiple DTCs, be sure to follow the instructions in B-CAN System Diagnosis Test Mode A (see page 22-92).

1. Clear the DTCs with the HDS.
2. Turn the ignition switch OFF, and then back ON (II).
3. Operate the driver's door lock switch LOCK/UNLOCK several times.
4. Check for DTCs with the HDS.

   Is DTC B1128 indicated?

   YES—Go to step 5.

   NO—Intermittent failure, the driver's door lock system is OK at this time. ■
5. With the driver's door lock switch in the neutral position, select SECURITY from the HDS and enter the DATA LIST.
6. Check the ON/OFF information of the DRIVER'S DOOR LOCK SWITCH (LOCK) and DRIVER'S DOOR LOCK SWITCH (UNLOCK) in the DATA LIST.

   Are both information indicators OFF?

   YES—Go to step 12.

   NO—Go to step 7.
7. Disconnect the driver's power window switch 22P connector.

(cont'd)

DTC Troubleshooting (cont'd)

8. Check the ON/OFF information of the DRIVER'S DOOR LOCK SWITCH (LOCK) and DRIVER'S DOOR LOCK SWITCH (UNLOCK) in the DATA LIST.

   Are both information indicators OFF?

   YES—Faulty door lock switch; replace the power window master switch. ■

   NO—Go to step 9.

9. Turn the ignition switch OFF.

10. Disconnect the under-dash fuse/relay box connector T (34P).

11. Check for continuity between the No. 28 (LOCK) and No. 27 (UNLOCK) terminals of the under-dash fuse/relay box connector T (34P) and body ground.

UNDER-DASH FUSE/RELAY BOX CONNECTOR T (34P)

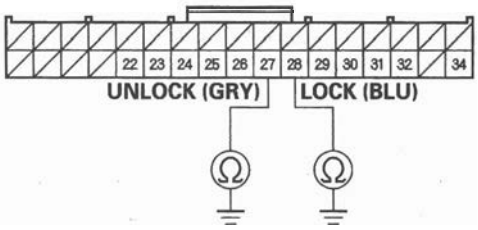

Wire side of female terminals

Are there continuity?

YES—Repair a short to ground in the LOCK or UNLOCK wire. ■

NO—Faulty MICU; replace the under-dash fuse/relay box (see page 22-64). ■

12. Turn the ignition switch OFF.

13. Disconnect the power window master switch 22P connector.

14. Disconnect under-dash fuse/relay box connector T (34P).

15. Check for continuity between the No. 28 (LOCK) and No. 27 (UNLOCK) terminals of the under-dash fuse/relay box connector T (34P).

UNDER-DASH FUSE/RELAY BOX CONNECTOR T (34P)

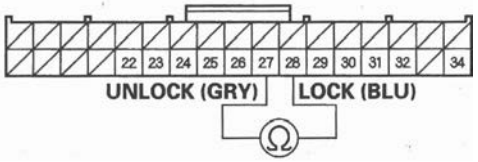

Wire side of female terminals

Is there continuity?

YES—Repair a short between the LOCK and UNLOCK wires. ■

NO—Substitute a known-good power window master switch, and recheck. If the symptom/indication goes away, replace the original power window master switch. If not, the MICU is faulty, replace the under-dash fuse/relay box (see page 22-64). ■

DTC B1129: Driver's Door Lock Knob Switch Signal Error (LOCK/UNLOCK)

NOTE: If you are troubleshooting multiple DTCs, be sure to follow the instructions in B-CAN System Diagnosis Test Mode A (see page 22-92).

1. Clear the DTCs with the HDS.
2. Turn the ignition switch OFF, and then back ON (II).
3. Operate the driver's door lock knob switch several times.
4. Check for DTCs with the HDS.

   Is DTC B1129 indicated?

   YES—Go to step 5.

   NO—Intermittent failure, the driver's door lock knob switch system is OK at this time. Check for loose or poor connections. ■
5. Select KEYLESS from the BODY ELECTRICAL menu, and enter the DATA LIST.
6. Check the ON/OFF information of the DRIVER'S DOOR LOCK KNOB SWITCH (LOCK) and the DRIVER'S DOOR LOCK KNOB SWITCH (UNLOCK).

   Does the DRIVER'S DOOR LOCK KNOB SWITCH (LOCK) information indicator ON and DRIVER'S DOOR LOCK KNOB SWITCH (UNLOCK) information indicator OFF with the driver's door lock knob switch in LOCK position, and does the DRIVER'S DOOR LOCK KNOB SWITCH (LOCK) information indicator OFF and DRIVER'S DOOR LOCK KNOB SWITCH (UNLOCK) information indicator ON with the driver's door lock knob switch in UNLOCK position?

   YES—Faulty MICU; replace the under-dash fuse/relay box (see page 22-64). ■

   NO—Go to step 7.
7. Disconnect the driver's door lock actuator 10P connector.
8. Check the ON/OFF information of the DRIVER'S DOOR LOCK KNOB SWITCH (LOCK) and DRIVER'S DOOR LOCK KNOB SWITCH (UNLOCK) in the DATA LIST.

   Are both information indicators OFF?

   YES—Check for an open in the driver's door lock switch (LOCK) wire or the driver's door lock knob switch (UNLOCK) wire between the MICU and the driver's door lock knob switch. If OK, replace the driver's door lock actuator. ■

   NO—Go to step 9.
9. Turn the ignition switch OFF.
10. Disconnect the under-dash fuse/relay box connector T (34P).
11. Check for continuity between the No. 23 (UNLOCK) and No. 24 (LOCK) terminals of the under-dash fuse/relay box connector T (34P) and body ground.

UNDER-DASH FUSE/RELAY BOX CONNECTOR T (34P)

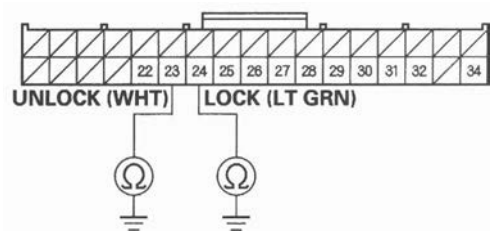

Wire side of female terminals

Is there continuity?

YES—Repair a short to ground in the LOCK or UNLOCK wire. ■

NO—Go to step 12.

(cont'd)

DTC Troubleshooting (cont'd)

12. Check for continuity between the No. 23 (UNLOCK) and No. 24 (LOCK) terminals of the under-dash fuse/relay box connector T (34P).

UNDER-DASH FUSE/RELAY BOX CONNECTOR T (34P)

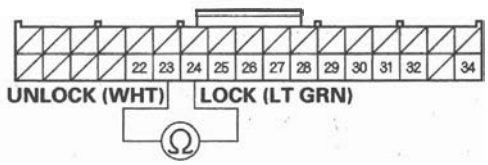

Wire side of female terminals

Is there continuity?

YES—Repair a short between the LOCK wire and UNLOCK wire. ■

NO—Faulty MICU; replace the under-dash fuse/relay box (see page 22-64). ■

Symptom Troubleshooting

Power Door Locks/Keyless

1. Check for B-CAN DTCs. If any B-CAN DTCs are indicated, troubleshoot and resolve them first.
2. If the door lock system and the keyless operation does not work, troubleshoot the door locks first.

NOTE: The system does not function when the ignition switch is ON (II).

No.	Symptom	Check Items
1	All the doors will not lock or unlock.*	• Poor ground (G401, G502, G601) • Blown No. 25 (20 A) fuse in the under-dash fuse/relay box • MICU input test (see page 22-126) • Driver's door key cylinder switch test (see page 22-134) • Door lock switch test (see page 22-133)
2	All the doors will not lock.*	MICU input test (see page 22-126)
3	All the doors will not unlock.*	MICU input test (see page 22-126)
4	Keyless operation does not work (LOCK, UNLOCK, PANIC).	Symptom troubleshooting (see page 22-124).
5	Doors will not unlock with the transmitter, but will unlock with the door switch.	Symptom troubleshooting (see page 22-124).
6	Doors will not lock with the transmitter, but will lock with the door switch.	• Symptom troubleshooting (see page 22-124). • Door switch test (check the door switch ON/OFF information with the HDS)
7	Doors automatically relock 30 seconds after being unlocked with the transmitter even though a door has been opened.	Symptom troubleshooting (see page 22-125).
8	Only driver's door will unlock or door locks relock immediately after unlocking with the remote.	Driver's door lock knob switch test (see page 22-132).
9	The horn does not sound when PANIC button on the transmitter pressed (USA only).	Symptom troubleshooting (see page 22-125).
10	Keyless operation will work even though the ignition key is in the ignition switch.	Ignition key switch test (see page 22-186).

*: If only one door is not working properly, check that door's lock actuator first, then check the other items listed in this table.

Symptom Troubleshooting (cont'd)

Keyless operation does not work (LOCK, UNLOCK, PANIC)

NOTE:
- Before troubleshooting, check the B-CAN DTCs. If any DTC is indicated, troubleshoot the indicated DTC first.
- Before troubleshooting, do the keyless transmitter test (see page 22-136).

1. Turn the ignition switch ON (II).
2. Try to start the engine.

   Does the engine start?

   YES—The immobilizer system is OK, go to step 3.

   NO—Go to the immobilizer symptom troubleshooting (see page 22-292).■
3. Turn the ignition switch OFF.
4. Test the transmitter (see page 22-136).

   Is the transmitter OK?

   YES—Replace the immobilizer-keyless control unit. ■

   NO—Replace the transmitter.■

Doors will not unlock (or lock) with the transmitter, but will unlock (lock) with the door switch

NOTE: Before troubleshooting, check the B-CAN DTCs. If any DTC is indicated, troubleshoot the indicated DTC first.

1. Turn the ignition switch OFF.
2. Remove the ignition key from the ignition switch.
3. Close and lock the doors.
4. Try to lock/unlock the doors with the keyless transmitter.

   Do the door lock actuators work normally?

   YES—Intermittent failure, the system is OK at this time.■

   NO—Go to step 5.
5. Open the driver's door.

   Does the key-in reminder chime sound?

   YES—Faulty ignition key switch, or short to ground on the ignition switch wire. Repair as necessary.■

   NO—Go to step 6.
6. Do the transmitter test (see page 22-136).

   Is the transmitter OK?

   YES—Substitute a known-good MICU and recheck. If there is still a problem, substitute a known-good immobilizer-keyless control unit and recheck.■

   NO—Replace the transmitter.■

The horn does not sound and/or the headlights do not flash when the PANIC button on the transmitter is pressed

NOTE: Before troubleshooting, check the B-CAN DTCs. If any DTC is indicated, troubleshoot the indicated DTC first.

1. Press the PANIC button.

   Does the horn sound?

   YES—Go to step 3.

   NO—Go to step 2.

2. Press the horn button.

   Does the horn sound?

   YES—Go to step 3.

   NO—Check the horn circuit. ■

3. Turn the headlight switch ON.

   Do the headlights come on?

   YES—Go to step 4.

   NO—Check the lighting circuit. ■

4. Do the transmitter test (see page 22-136).

   Is the transmitter OK?

   YES—Substitute a known-good MICU and recheck. If there is still a problem, substitute a known-good immobilizer-keyless control unit and recheck. ■

   NO—Replace the transmitter. ■

Doors automatically relock after being unlocked with the transmitter even though a door has been opened

1. Place the ceiling light switch in the DOOR position.
2. Turn the ignition switch ON (II).
3. Close all doors.
4. Watch the ceiling light and the door indicator on the gauge control module.

   Does the ceiling light and door indicator go off?

   YES—Go to step 5.

   NO—Repair a short to ground in the wire between the MICU and door switch. ■

5. Open and close each door one at a time.
6. Watch the ceiling light and the door indicator on the gauge control module.

   Does the ceiling light and door indicator come on when the door is open, and go off when the door is closed?

   YES—Substitute a known-good MICU and recheck. If the symptom goes away, replace the original MICU. ■

   NO—Repair an open in the wire between the MICU and the door switch. If the wire is OK, faulty the door switch, replace it. ■

MICU Input Test

NOTE: Before testing, troubleshoot the B-CAN System Diagnosis Test Mode A (see page 22-92).

1. Turn the ignition switch OFF.
2. Disconnect the under-dash fuse/relay box connectors E, F, G, M, N, Q, R, and T.

   NOTE: All connector views are wire side of female terminals.

UNDER-DASH FUSE/RELAY BOX CONNECTOR E (42P)

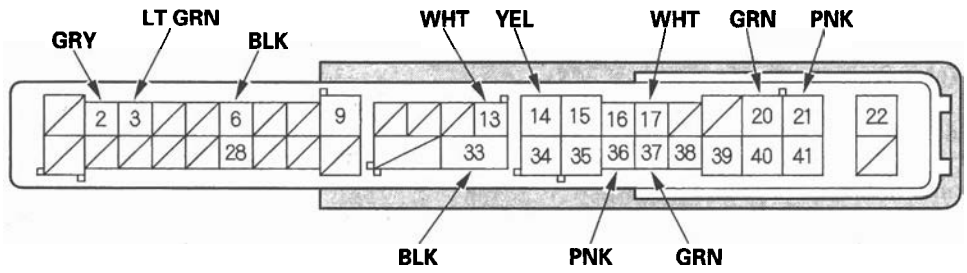

UNDER-DASH FUSE/RELAY BOX CONNECTOR F (34P)

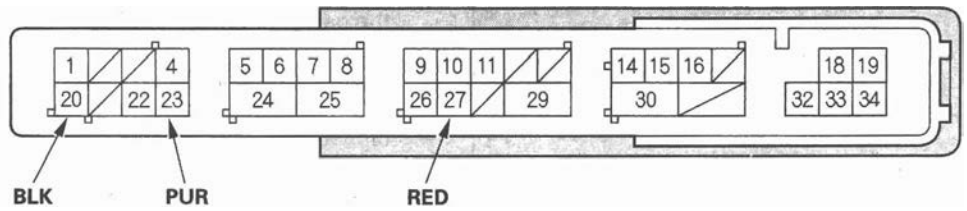

UNDER-DASH FUSE/RELAY BOX CONNECTOR G (21P)

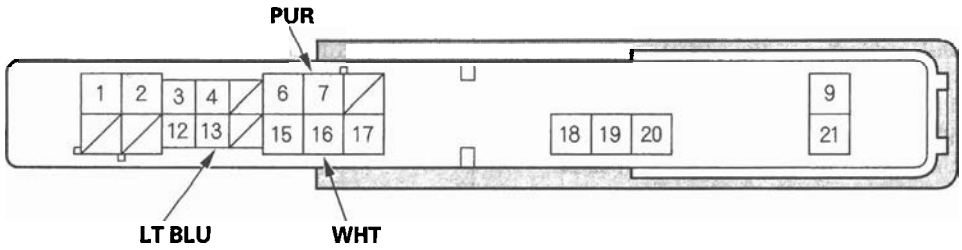

UNDER-DASH FUSE/RELAY BOX
CONNECTOR M (10P)

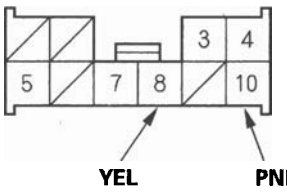

UNDER-DASH FUSE/RELAY BOX
CONNECTOR N (14P)

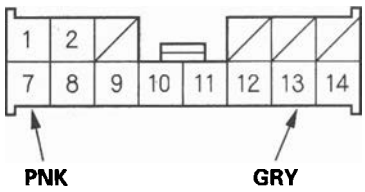

UNDER-DASH FUSE/RELAY BOX
CONNECTOR R (20P)

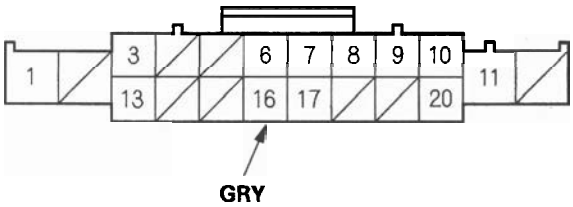

UNDER-DASH FUSE/RELAY BOX
CONNECTOR Q (16P)

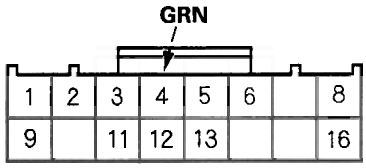

UNDER-DASH FUSE/RELAY BOX
CONNECTOR T (34P)

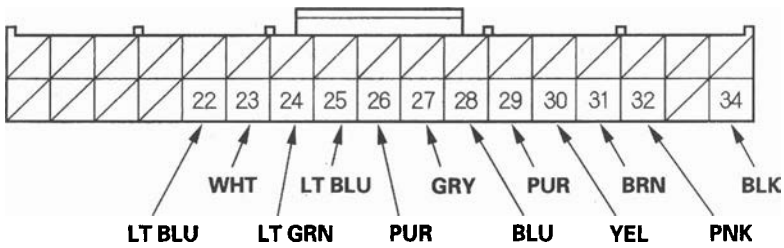

3. Inspect the connector and socket terminals to be sure they are all making good contact.

   - If the terminals are bent, loose or corroded, repair them as necessary and recheck the system.
   - If the terminals look OK, go to step 4.

(cont'd)

MICU Input Test (cont'd)

4. With the connectors still disconnected, make these input tests at the appropriate connector.

   - If any test indicates a problem, find and correct the cause, then recheck the system.
   - If all the input tests prove OK, go to step 5.

Cavity	Wire	Test condition	Test: Desired result	Possible cause if result is not obtained
G16	WHT	Under all conditions	Check for voltage to ground: There should be battery voltage.	• Blown No. 12 (15 A) fuse in the under-hood fuse/relay box • An open in the wire
G7	PUR	Under all conditions	Connect G16 and G7 terminals with a jumper wire momentarily: The horn should sound.	• Poor ground (body ground) • Blown No. 12 (15 A) fuse in the under-hood fuse/relay box Faulty horn • An open in the wire
E20	GRN	Under all conditions	Connect G2 and E20 terminals with a jumper wire: The tailgate release actuator should work (tailgate should open).	• Poor ground (G602) • Faulty tailgate release actuator • An open in the wire
N7 N13	PNK GRY	Under all conditions	Connect battery power to the N13 terminal and ground the N7 terminal momentarily: The driver's door lock actuator should unlock.	• Faulty driver's door lock actuator • An open in the wire
M8 M10	YEL PNK	Under all conditions	Connect battery power to the M8 terminal and ground the M10 terminal momentarily: The front passenger's and the right rear door lock actuators should unlock.	• Faulty front passenger's door lock actuator • Faulty right rear door lock actuator • An open in the wire
E14 E21	YEL PNK	Under all conditions	Connect battery power to the E14 terminal and ground the E21 terminal momentarily: The left rear door lock actuator should unlock.	• Faulty left rear door lock actuator An open in the wire

5. Reconnect the connectors to the under-dash fuse/relay box, and make these input tests at the connectors.

If any test indicates a problem, find and correct the cause, then recheck the system.
- If all the input tests prove OK, the MICU must be faulty; replace the under-dash fuse/relay box (see page 22-64).

Cavity	Wire	Test condition	Test: Desired result	Possible cause if result is not obtained
E6	BLK	Under all conditions	Check for voltage to ground: There should be less than 0.5 V.	• Poor ground (G602) • An open in the wire
E33	BLK	Under all conditions	Check for voltage to ground: There should be less than 0.5 V.	• Poor ground (G602) • An open in the wire
F20	BLK	Under all conditions	Check for voltage to ground: There should be less than 0.5 V.	• Poor ground (G401) • An open in the wire
T34	BLK	Under all conditions	Check for voltage to ground: There should be less than 0.5 V.	• Poor ground (G502) • An open in the wire
E2	GRY	Right rear door open	Check for voltage to ground: There should be less than 1 V.	• Faulty right rear door switch • An open in the wire
		Right rear door closed	Check for voltage to ground: There should be 5 V or more.	• Faulty right rear door switch • Short to ground in the wire
E3	LT GRN	Front passenger's door open	Check for voltage to ground: There should be less than 1 V.	• Faulty front passenger's door switch • An open in the wire
		Front passenger's door closed	Check for voltage to ground: There should be 5 V or more.	• Faulty front passenger's door switch • Short to ground in the wire
E17	WHT	Left rear door open	Check for voltage to ground: There should be less than 1 V.	• Faulty left rear door switch • An open in the wire
		Left rear door closed	Check for voltage to ground: There should be 5 V or more.	• Faulty left rear door switch • Short to ground in the wire
E36	PNK	Tailgate open	Check for voltage to ground: There should be less than 1 V.	• Poor ground (G602) • Faulty tailgate latch switch • An open in the wire
		Tailgate closed	Check for voltage to ground: There should be 5 V or more.	• Faulty tailgate latch switch • Short to ground in the wire
E37	GRN	Driver's door open	Check for voltage to ground: There should be less than 1 V.	• Faulty driver's door switch • An open in the wire
		Driver's door closed	Check for voltage to ground: There should be 5 V or more.	• Faulty driver's door switch • Short to ground in the wire
F27	RED	Transmission range switch in P	Check for voltage to ground: There should be less than 1 V.	• Poor ground (G101) • Faulty transmission range switch • An open in the wire
		Transmission range switch in any other position than P	Check for voltage to ground: There should be 5 V or more.	• Faulty transmission range switch • Short to ground in the wire
G13	LT BLU	Hood open	Check for voltage to ground: There should be less than 1 V.	• Poor ground (G301) • Faulty hood switch • An open in the wire
		Hood closed	Check for voltage to ground: There should be 5 V or more.	• Faulty hood switch • Short to ground in the wire
Q4	GRN	Under all conditions	Check for voltage to ground: There should be less than 1 V.	An open in the wire
R16	GRY	Ignition key inserted into the ignition switch	Check for voltage to ground: There should be less than 1 V.	• Poor ground (G501) • Faulty ignition key switch • An open in the wire
		Ignition switch OFF and ignition key removed from the ignition switch	Check for voltage to ground: There should be 5 V or more.	• Faulty ignition key switch • Short to ground in the wire
T22	LT BLU	Front passenger's door lock knob switch unlocked	Check for voltage to ground: There should be less than 1 V.	• Poor ground (G503) • Faulty front passenger's door lock knob switch • An open in the wire
		Front passenger's door lock knob switch locked	Check for voltage to ground: There should be 5 V or more.	• Faulty front passenger's door lock knob switch • Short to ground in the wire
E13	WHT	Tailgate outer handle pulled	Check for voltage to ground: There should be less than 1 V.	• Poor ground (G602) • Faulty tailgate outer handle switch • An open in the wire
		Tailgate outer handle released	Check for voltage to ground: There should be 5 V or more.	• Faulty tailgate outer handle switch • A short to ground in the wire

(cont'd)

MICU Input Test (cont'd)

Cavity	Wire	Test condition	Test: Desired result	Possible cause if result is not obtained
T23	WHT	Driver's door lock knob switch unlocked	Check for voltage to ground: There should be less than 1 V.	• Poor ground (G501) • Faulty driver's door lock knob switch • An open in the wire
		Driver's door lock knob switch locked	Check for voltage to ground: There should be 5 V or more.	• Faulty driver's door lock knob switch • Short to ground in the wire
T24	LT GRN	Driver's door lock knob switch unlocked	Check for voltage to ground: There should be 5 V or more.	• Faulty driver's door lock knob switch • Short to ground in the wire
		Driver's door lock knob switch locked	Check for voltage to ground: There should be less than 1 V.	Poor ground (G501) • Faulty driver's door lock knob switch • An open in the wire
T25	LT BLU	Right rear door lock knob switch unlocked	Check for voltage to ground: There should be less than 1 V.	• Poor ground (G552) • Faulty right rear door lock knob switch • An open in the wire
		Right rear door lock knob switch locked	Check for voltage to ground: There should be 5 V or more.	• Faulty right rear door lock knob switch • Short to ground in the wire
T26	PUR	Left rear door lock knob switch unlocked	Check for voltage to ground: There should be less than 1 V.	• Poor ground (G601) • Faulty left rear door lock knob switch • An open in the wire
		Left rear door lock knob switch locked	Check for voltage to ground: There should be 5 V or more.	• Faulty left rear door lock knob switch • Short to ground in the wire
T27	GRY	Driver door lock switch unlocked	Check for voltage to ground: There should be less than 1 V.	• Poor ground (G501) • Faulty driver door lock switch • An open in the wire
		Driver door lock switch in neutral	Check for voltage to ground: There should be 5 V or more.	• Faulty driver door lock switch • Short to ground in the wire
T28	BLU	Driver door lock switch locked	Check for voltage to ground: There should be less than 1 V.	• Poor ground (G501) • Faulty driver door lock switch • An open in the wire
		Driver door lock switch in neutral	Check for voltage to ground: There should be 5 V or more.	• Faulty driver door lock switch • Short to ground in the wire
T29	PUR	Front passenger's door lock switch unlocked	Check for voltage to ground: There should be less than 1 V.	• Poor ground (G503) • Faulty front passenger's door lock switch • An open in the wire
		Front passenger's door lock switch in neutral	Check for voltage to ground: There should be 5 V or more.	• Faulty front passenger's door lock switch Short to ground in the wire
T30	YEL	Front passenger's door lock switch locked	Check for voltage to ground: There should be less than 1 V.	• Poor ground (G503) • Faulty front passenger's door lock switch • An open in the wire
		Front passenger's door lock switch in neutral	Check for voltage to ground: There should be 5 V or more.	• Faulty front passenger's door lock switch Short to ground in the wire
T31	BRN	Driver door key cylinder switch unlocked	Check for voltage to ground: There should be less than 1 V.	• Poor ground (G501) • Faulty driver door key cylinder switch • An open in the wire
		Driver door key cylinder switch in neutral	Check for voltage to ground: There should be 5 V or more.	• Faulty driver door key cylinder switch • Short to ground in the wire
T32	PNK	Driver door key cylinder switch locked	Check for voltage to ground: There should be less than 1 V.	• Poor ground (G501) • Faulty driver door key cylinder switch • An open in the wire
		Driver door key cylinder switch in neutral	Check for voltage to ground: There should be 5 V or more.	• Faulty driver door key cylinder switch • Short to ground in the wire

Door Lock Actuator Test

Driver's Door and Left Rear Door

1. Remove the door panel.
   - Front (see page 20-6)
   - Rear (see page 20-17)
2. Disconnect the 10P connector (A) from the actuator (B).

   NOTE: The illustration shows the driver's door.

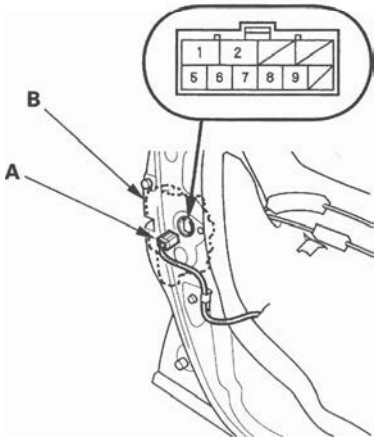

3. Check the actuator operation by connecting power and ground according to the table. To prevent damage to the actuator, apply battery voltage only momentarily.

Terminal / Position	1	2
LOCK	⊕	⊖
UNLOCK	⊖	⊕

4. If the actuator does not operate as specified, replace it.

Front Passenger's Door and Right Rear Door

1. Remove the door panel.
   - Front (see page 20-6)
   - Rear (see page 20-17)
2. Disconnect the 10P connector (A) from the actuator (B).

   NOTE: The illustration shows the front passenger's door.

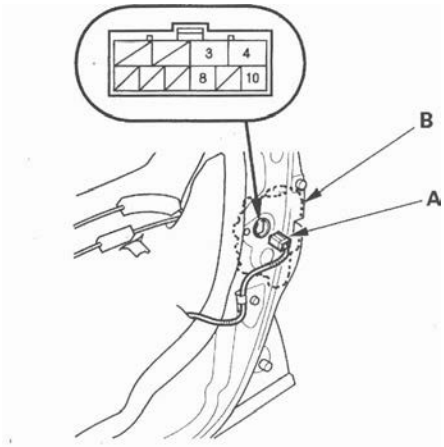

3. Check the actuator operation by connecting power and ground according to the table. To prevent damage to the actuator, apply battery voltage only momentarily.

Terminal / Position	3	4
LOCK	⊕	⊖
UNLOCK	⊖	⊕

4. If the actuator does not operate as specified, replace it.

Door Lock Knob Switch Test

Driver's Door

1. Remove the driver's door panel (see page 20-6).
2. Disconnect the 10P connector (A) from the actuator (B).

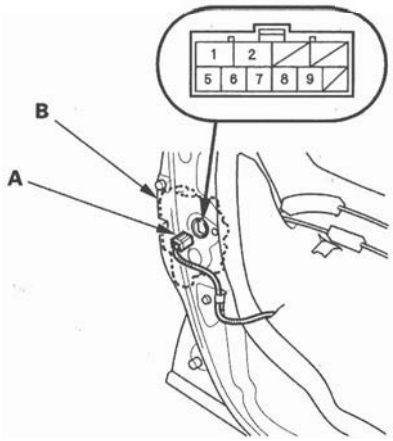

3. Check for continuity between the terminals.
   - There should be continuity between the No. 6 and No. 5 terminals when the door lock knob switch is in the LOCK position and no continuity when the switch is in the UNLOCK position.
   - There should be continuity between the No. 7 and No. 5 terminals when the door lock knob switch is in the UNLOCK position and no continuity when the switch is in the LOCK position.
4. If the continuity is not as specified, replace the door lock actuator.

Passenger Doors (With Security)

1. Remove the passenger's door panel.
   - Front (see page 20-6)
   - Rear (see page 20-17)
2. Disconnect the 10P connector (A) from the actuator (B).

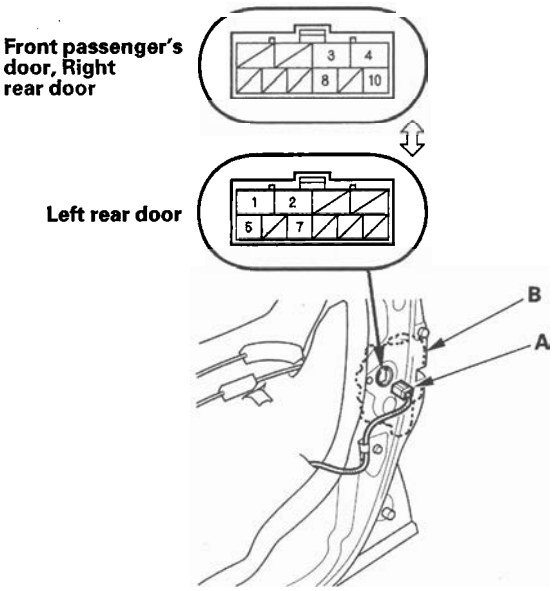

3. Check for continuity between the terminals.
   There should be continuity between the No. 8 [No. 7] and No. 10 [No. 5] terminals when the door lock knob switch in the UNLOCK position and no continuity when the switch is in the LOCK position.
   [ ] : Left rear door
4. If the continuity is not specified, replace the door lock actuator.

Door Lock Switch Test

Driver's Door

NOTE: The driver's door lock switch is built into the power window master switch.

1. Remove the power window master switch and disconnect its connector (see page 22-199).

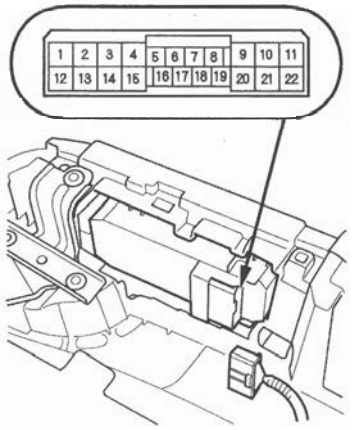

2. Check for continuity between the power window master switch 22P connector terminals.

   - There should be continuity between the No. 17 and No. 12 terminals when the door lock switch is in the LOCK position.
   - There should be no continuity between the No. 17 and No. 12 terminals when the door lock switch is in the UNLOCK position.
   - There should be continuity between the No. 19 and No. 12 terminals when the door lock switch is in the UNLOCK position.
   - There should be no continuity between the No. 19 and No. 12 terminals when the door lock switch is in the LOCK position.

3. If the continuity is not as specified, replace the power window master switch (see page 22-199).

Front Passenger's Door

NOTE: The front passenger's door lock switch is built into the front passenger's power window switch.

1. Remove the front passenger's power window switch (see page 22-199).

   NOTE: The illustration shows the front passenger's door.

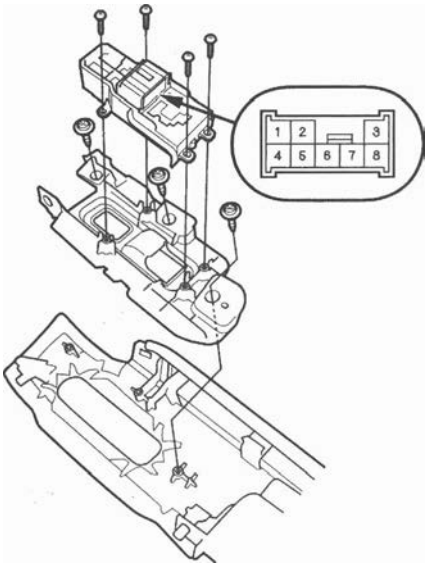

2. Check for continuity between the front passenger's power window switch 8P connector terminals.

   - There should be continuity between the No. 1 and No. 2 terminals when the door lock switch is in the LOCK position.
   - There should be no continuity between the No. 1 and No. 2 terminals when the door lock switch is in the UNLOCK position.
   - There should be continuity between the No. 2 and No. 6 terminals when the door lock switch is in the UNLOCK position.
   - There should be no continuity between the No. 2 and No. 6 terminals when the door lock switch is in the LOCK position.

3. If the continuity is not as specified, replace the front passenger's power window switch (see page 22-199).

Door Key Cylinder Switch Test

1. Remove the driver's door panel (see page 20-6).
2. Disconnect the 10P connector (A) from the key cylinder switch (B).

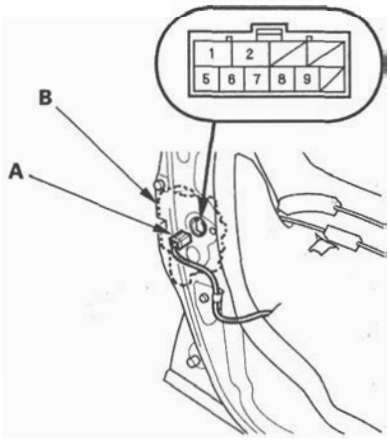

3. Check for continuity between the terminals.
   - There should be continuity between the No. 9 and No. 5 terminals when the door key cylinder switch is in LOCK position. (With security)
   - There should be no continuity between the No. 9 and No. 5 terminals when the door key cylinder switch is in the neutral or UNLOCK position. (With security)
   - There should be continuity between the No. 8 and No. 5 terminals when the door key cylinder switch is in UNLOCK position.
   - There should be no continuity between the No. 8 and No. 5 terminals when the door key cylinder switch is in the neutral or LOCK position.
4. If the continuity is not as specified, replace the door latch/actuator assembly (see page 20-11).

Hood Switch Test

1. Open the hood.
2. Disconnect the 2P connector from the hood switch.

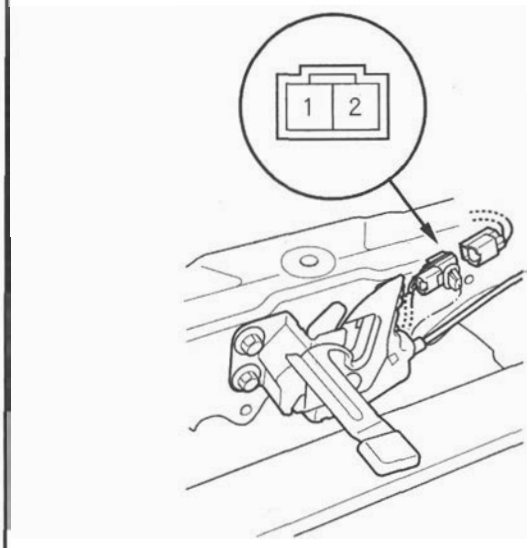

3. Check for continuity between the terminals.
   - There should be continuity between the No. 1 and No. 2 terminals when the hood is opened (latch released).
   - There should be no continuity between the No. 1 and No. 2 terminals when the hood is closed (latch pushed down).
4. If the continuity is not as specified, replace the hood latch assembly (see page 20-193).

Tailgate Release Actuator Test

1. Open the tailgate, and remove the tailgate trim (see page 20-78).
2. Disconnect the 2P connector from the tailgate release actuator.

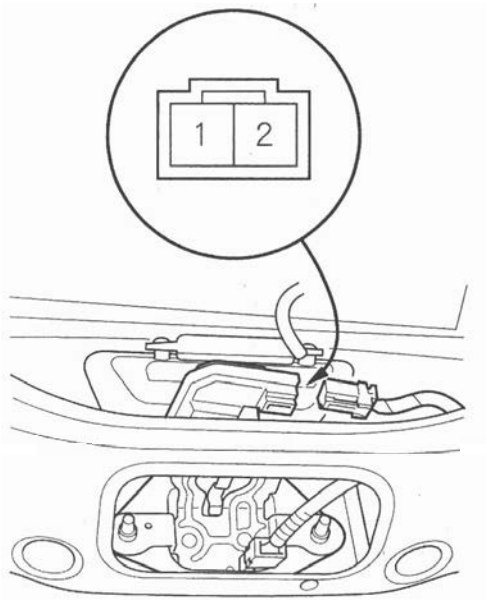

3. Check the actuator operation by connecting power to the No. 2 terminal and ground to the No. 1 terminal momentarily. The actuator should work.
4. If the actuator does not work, replace the tailgate latch switch/release actuator assembly.

Tailgate Outer Handle Switch Test/ Replacement

1. Open the tailgate, and remove the tailgate trim (see page 20-78).
2. Disconnect the 2P connector from the tailgate outer handle switch.

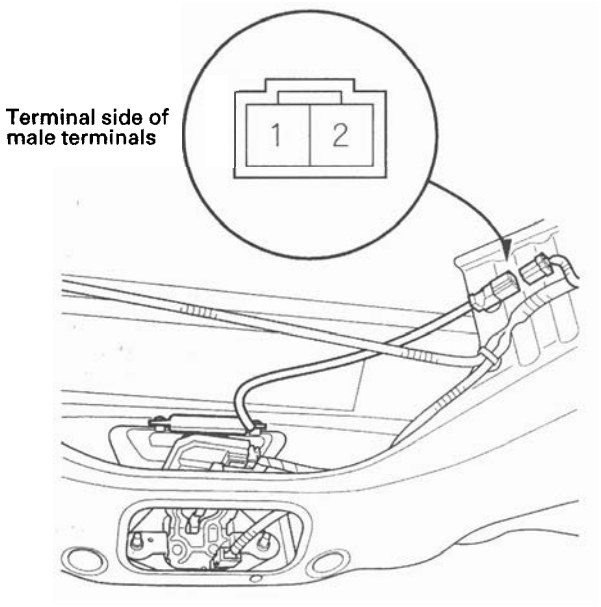

3. Check for continuity between the No. 1 terminal and No. 2 terminals.
   - There should be continuity with the outer handle lever pulled.
   - There should be no continuity with the outer handle lever released.
4. If the continuity is not as specified, remove the outer handle (see page 20-195), then replace the tailgate outer handle switch (A).

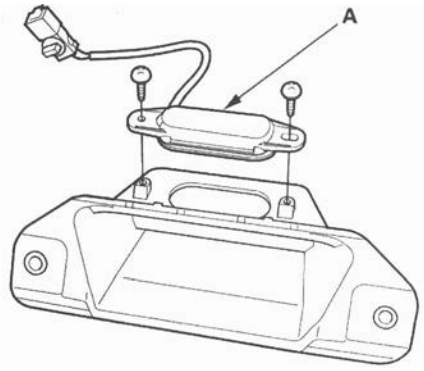

Transmitter Test

NOTE:
- If the doors unlock or lock with the transmitter, but the LED on the transmitter does not come on, the LED is faulty; replace the transmitter.
- If any door is open, you cannot lock the doors with the transmitter.
- If you unlocked the doors with the transmitter, but do not open any of the doors within 30 seconds, the doors relock automatically.
- The doors do not lock or unlock with the transmitter if the ignition key is inserted in the ignition switch.

With HDS

1. Press the lock or unlock button five or six times to reset the transmitter.

   - If the locks work, the transmitter is OK.
   - If any of the transmitter buttons does not work, replace the transmitter, then problem and register the transmitter (see page 22-302).
   - If the locks don't work, go to step 2.

2. Connect the HDS to the data link connector.

3. Select KEYLESS from the BODY ELECTRICAL menu, then select INSPECTION, then the KEYLESS CHECK.

4. Press the lock, unlock, or panic button and check the response on the screen of the HDS.

   NOTE: The door lock actuators may or may not cycle when receiving input from the transmitter.

   - If KEYLESS ENTRY TRANSMITTER CODE IS RECEIVED is indicated, the transmitter is OK.
   - If DIFFERENT KEYLESS ENTRY TRANSMITTER CODE IS RECEIVED is indicated, the transmitter is not registered to the vehicle, if necessary, reprogram and register the transmitter (see page 22-302).
     If KEYLESS ENTRY TRANSMITTER CODE IS NOT RECEIVED is indicated, go to step 5.

5. Open the transmitter, and check for water damage.

   - If you find any water damage, replace the transmitter, then reprogram and register the transmitter (see page 22-302).
   - If there is no water damage, go to step 6.

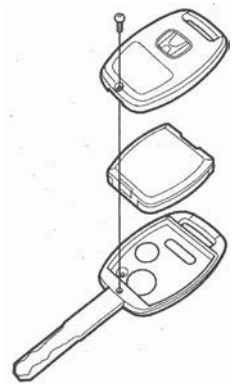

6. Replace the transmitter battery (A) with a new one, and press the lock or unlock button and check the response on the screen of the HDS.

   - If KEYLESS ENTRY TRANSMITTER CODE IS RECEIVED is indicated, the transmitter is OK.
   - If KEYLESS ENTRY TRANSMITTER CODE IS NOT RECEIVED is indicated, go to step 7.

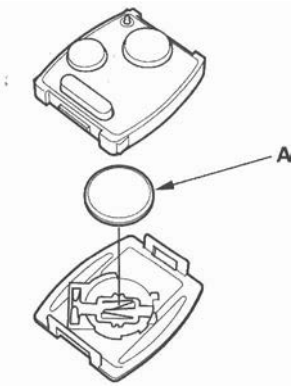

7. Use a different known-good keyless transmitter assembly and repeat steps 3 and 4.

   NOTE: The keyless transmitter does not need to be programmed to the vehicle for this test.

   - If (DIFFERENT) KEYLESS ENTRY TRANSMITTER CODE IS RECEIVED is indicated, replace the keyless transmitter and do the immobilizer system registration (see page 22-302).
   - If KEYLESS ENTRY TRANSMITTER CODE IS NOT RECEIVED is indicated, the immobilizer-keyless control unit is faulty, replace it and do the immobilizer system registration (see page 22-302).

   NOTE: As the keyless transmitter is combined with the immobilizer transponder, so when the transponder is registered by the HDS, the keyless transmitter programming is completed automatically.

Without HDS

1. Start the engine.

   - If the engine does not start, go to the immobilizer system troubleshooting (see page 22-292).
   - If the engine starts, go to step 2.

2. Press the lock or unlock button five or six times to reset the transmitter.

   - If the locks work, the transmitter is OK.
   - If the locks don't work, go to step 3.

3. Open the transmitter, and check for water damage.

   - If you find any water damage, replace the transmitter.
   - If there is no water damage, go to step 4.

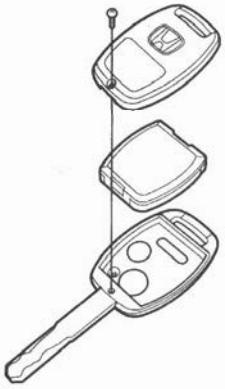

(cont'd)

Transmitter Test (cont'd)

4. Replace the transmitter battery (A) with a new one, and try to lock and unlock the doors with the transmitter by pressing the lock or unlock button five or six times.

   - If the doors lock and unlock, the transmitter is OK.
   - If the doors don't lock and unlock, go to step 5.

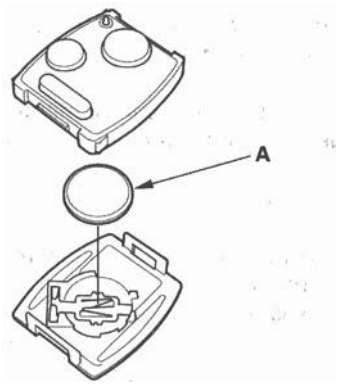

5. Reprogram and register the transmitter (see page 22-302), then try to lock and unlock the doors.

   - If the doors lock and unlock, the transmitter is OK.
   - If the doors don't lock and unlock, substitute a known-good transmitter and recheck (see page 22-302). If still not operating, replace the immobilizer-keyless control unit.

Component Location Index

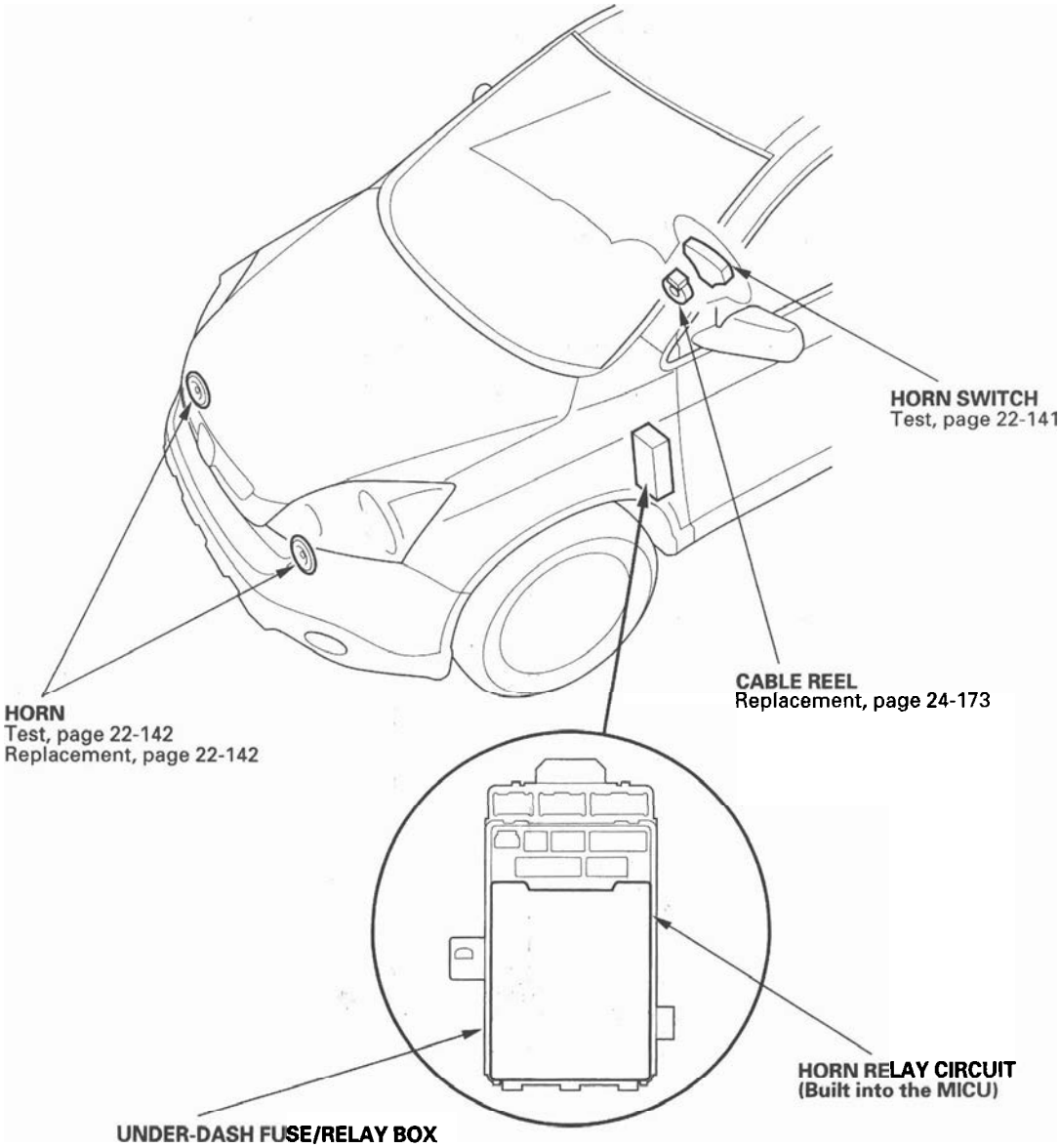

Horns

Circuit Diagram

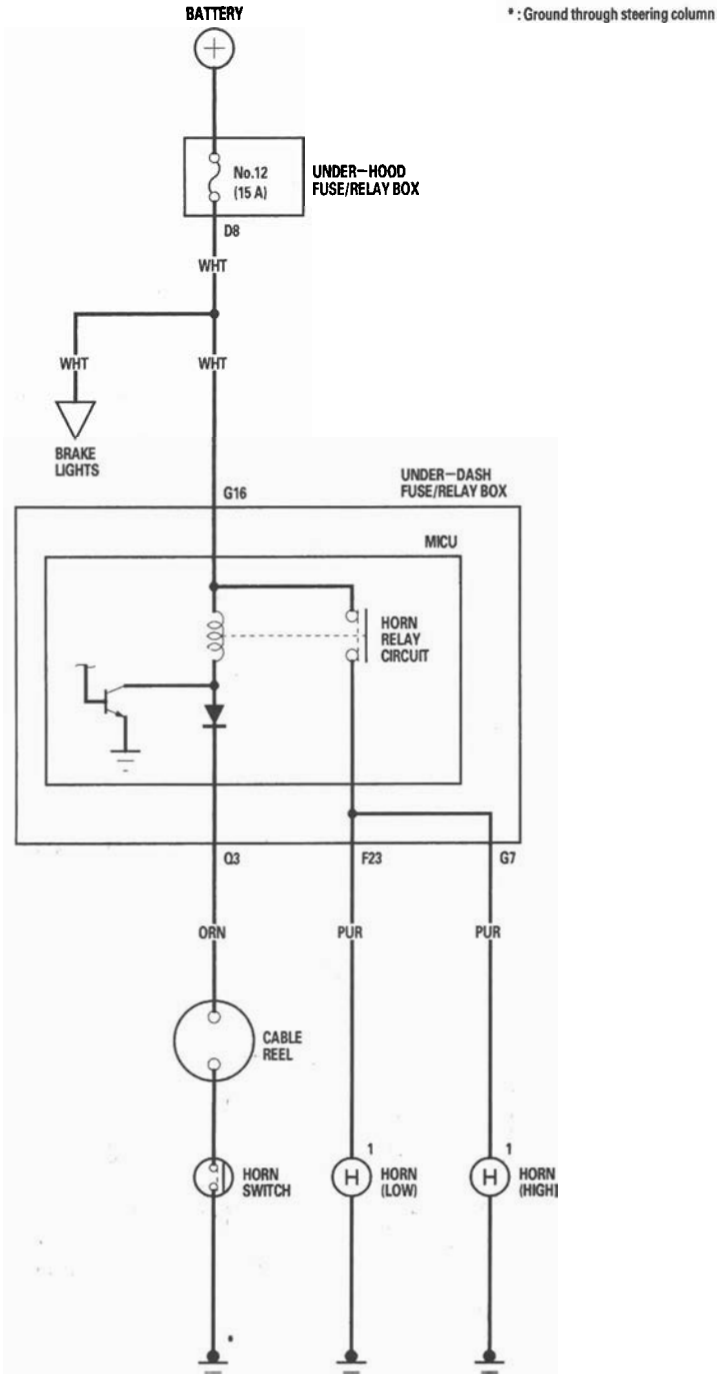

Horn Switch Test

1. Remove the steering column covers (see page 17-25).

2. Disconnect the dashboard wire harness 20P connector (A) from the cable reel (B).

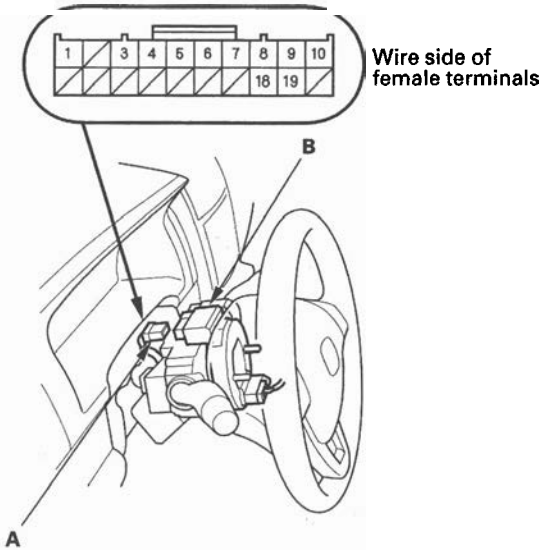

3. Using a jumper wire, connect the dashboard wire harness 20P connector No. 1 terminal to body ground. The horns should sound.

   - If the horns sound, go to step 4.
   - If the horns do not sound, check these items:
     - No. 12 (15 A) fuse in the under-hood fuse/relay box.
     - Horn (see page 22-142).
     - MICU.
     - An open in the wire.

DASHBOARD WIRE HARNESS 20P CONNECTOR

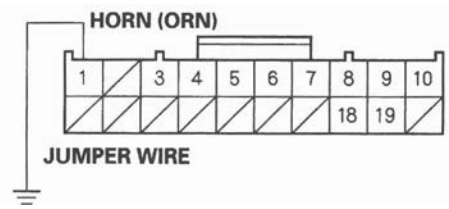

Wire side of female terminals

4. Reconnect the dashboard wire harness 20P connector (A) to the cable reel (B).

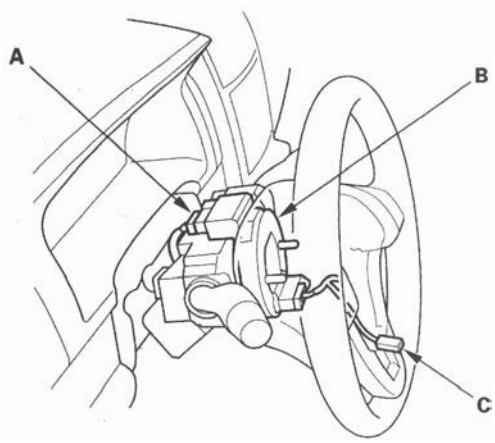

5. Remove the driver's airbag assembly (see page 24-161), and disconnect the horn switch 1P positive terminal (C) from the driver's airbag.

6. Check for continuity between the dashboard wire harness 20P connector No. 1 terminal and the cable reel subharness 20P connector No. 11 terminal.

   - If there is continuity, go to step 7.
   - If there is no continuity, replace the cable reel (see page 24-173).

CABLE REEL SUBHARNESS 20P CONNECTOR
Wire side of female terminals

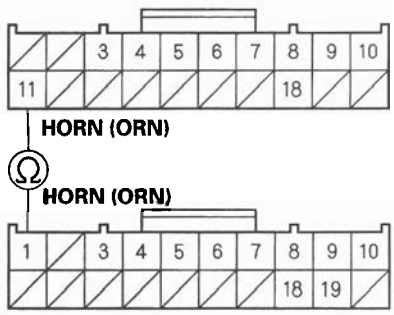

DASHBOARD WIRE HARNESS 20P CONNECTOR
Wire side of female terminals

(cont'd)

Horn Switch Test (cont'd)

7. Check for continuity between the cable reel subharness 20P connector No. 11 terminal and the horn switch 1P positive terminal.

   - If there is continuity, check the installation of the driver's airbag assembly and the steering wheel. If OK, replace the driver's airbag assembly.
   - If there is no continuity, repair an open in the wire.

CABLE REEL SUBHARNESS 20P CONNECTOR
Wire side of female terminals

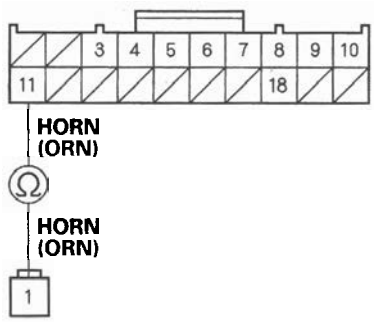

HORN SWITCH 1P POSITIVE TERMINAL
Wire side of female terminals

Horn Test/Replacement

1. Remove the front bumper (see page 20-149).
2. Disconnect the 1P connector (A) from the horn (B).

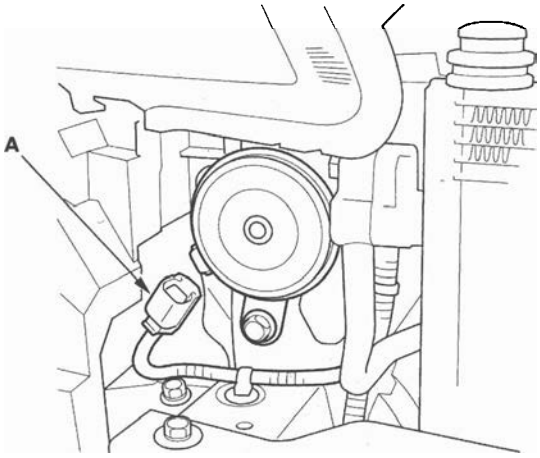

3. Test the horn by connecting battery power to the terminal (A) and grounding the bracket (B). The horn should sound.

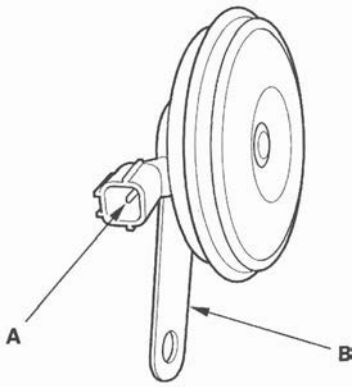

4. If it fails to sound, replace it.

Exterior Lights

Component Location Index

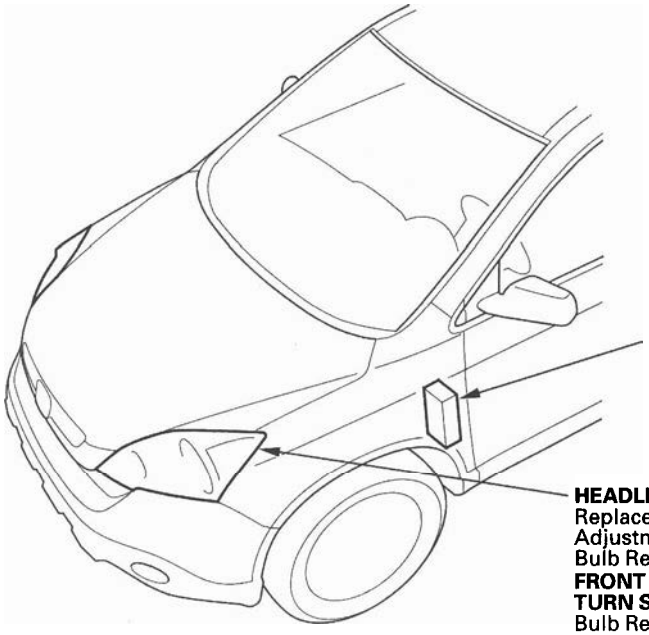

DAYTIME RUNNING LIGHTS CIRCUIT (Built into the MICU)
Input Test, page 22-157
Replacement, page 22-64

HEADLIGHTS
Replacement, page 22-163
Adjustment, page 22-162
Bulb Replacement, page 22-163

FRONT SIDE MARKER/PARKING/ TURN SIGNAL LIGHTS
Bulb Replacement, page 22-163

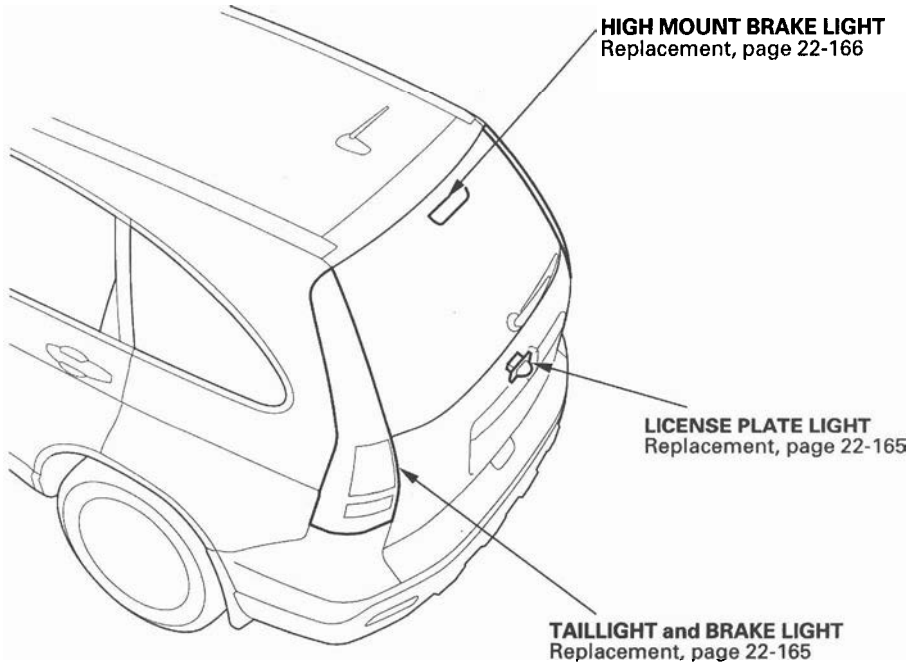

HIGH MOUNT BRAKE LIGHT
Replacement, page 22-166

LICENSE PLATE LIGHT
Replacement, page 22-165

TAILLIGHT and BRAKE LIGHT
Replacement, page 22-165

REAR TURN SIGNAL LIGHT
Replacement, page 22-165

BACK-UP LIGHT
Replacement, page 22-165

(cont'd)

Component Location Index (cont'd)

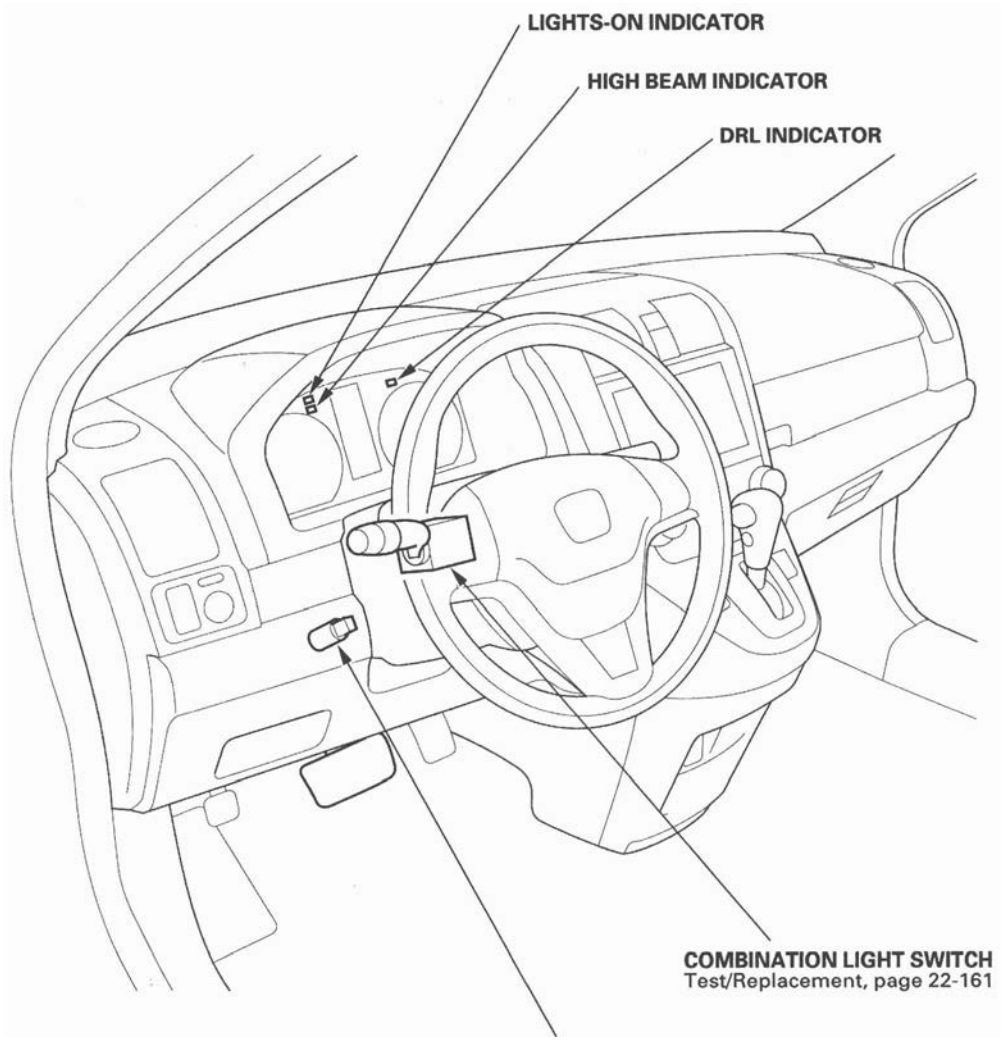

BRAKE PEDAL POSITION SWITCH
Test, page 22-166
Adjustment, page 19-6

System Description

Headlights System Description

The headlight system is composed of the MICU, the headlight and dimmer/flash-to-pass switches (inside the combination light switch), the left and right headlights, and the high beam indicator.
The MICU controls the headlights with a built-in low beam headlight relay and a built-in high beam control circuit based upon the position of the headlight and dimmer/flash-to-pass combination light switches.

Low Beams
When you move the headlight switch to the ON position and the dimmer/flash-to-pass switch to the low position, a ground signal is supplied to the No. 11 terminal of the under-dash fuse/relay box (MICU) connector S (20P). The MICU then energizes the low beam relay, supplying battery voltage to the low beam headlights, turning them on.

High Beams
When you move the headlight switch to the ON position and the dimmer/flash-to-pass switch to the high position, ground signals are supplied to the No. 11 and No. 16 terminals of the under-dash fuse/relay box (MICU) connector S (20P). The MICU then energizes the low beam headlight relay and activates the high beam control circuit, supplying battery voltage to the low and high beam headlights, turning them on.

Flash-to-Pass
When you pull the dimmer/flash-to-pass switch to the passing position, a ground signal is supplied to No. 12 terminal of the under-dash fuse/relay box (MICU) connector S (20P). The MICU then energizes the low beam headlight relay and activates the high beam control circuit for as long as the switch is held, supplying battery voltage to the low and high beam headlights, turning them on.

Daytime Running Lights System Description

The daytime running lights system includes the MICU, the left and right high beam headlights, and the DRL indicator. The daytime running lights operate with the ignition switch ON (II), the headlights off (headlight switch OFF or in the parking position), and the parking brake released.
When the daytime running lights are on, the MICU turns the high beam headlight control circuit on and off (duty cycle), which provides a reduced voltage (approximately 6—8 volts) to the high beam headlights (via the No. 12 and No. 13 fuses in the under-dash fuse/relay box); the high beam headlights come on with reduced brightness. The MICU also supplies battery voltage to the DRL indicator, turning it on.

NOTE:
- The daytime running lights are disabled when the ignition switch is turned OFF. To keep the daytime running lights from coming on, apply the parking brake switch while the ignition switch is OFF. When you then turn the ignition switch back ON (II), the daytime running lights will not come on until the parking brake is released.
- The headlights revert to normal operation when you turn them on with the headlight switch.

Circuit Diagram

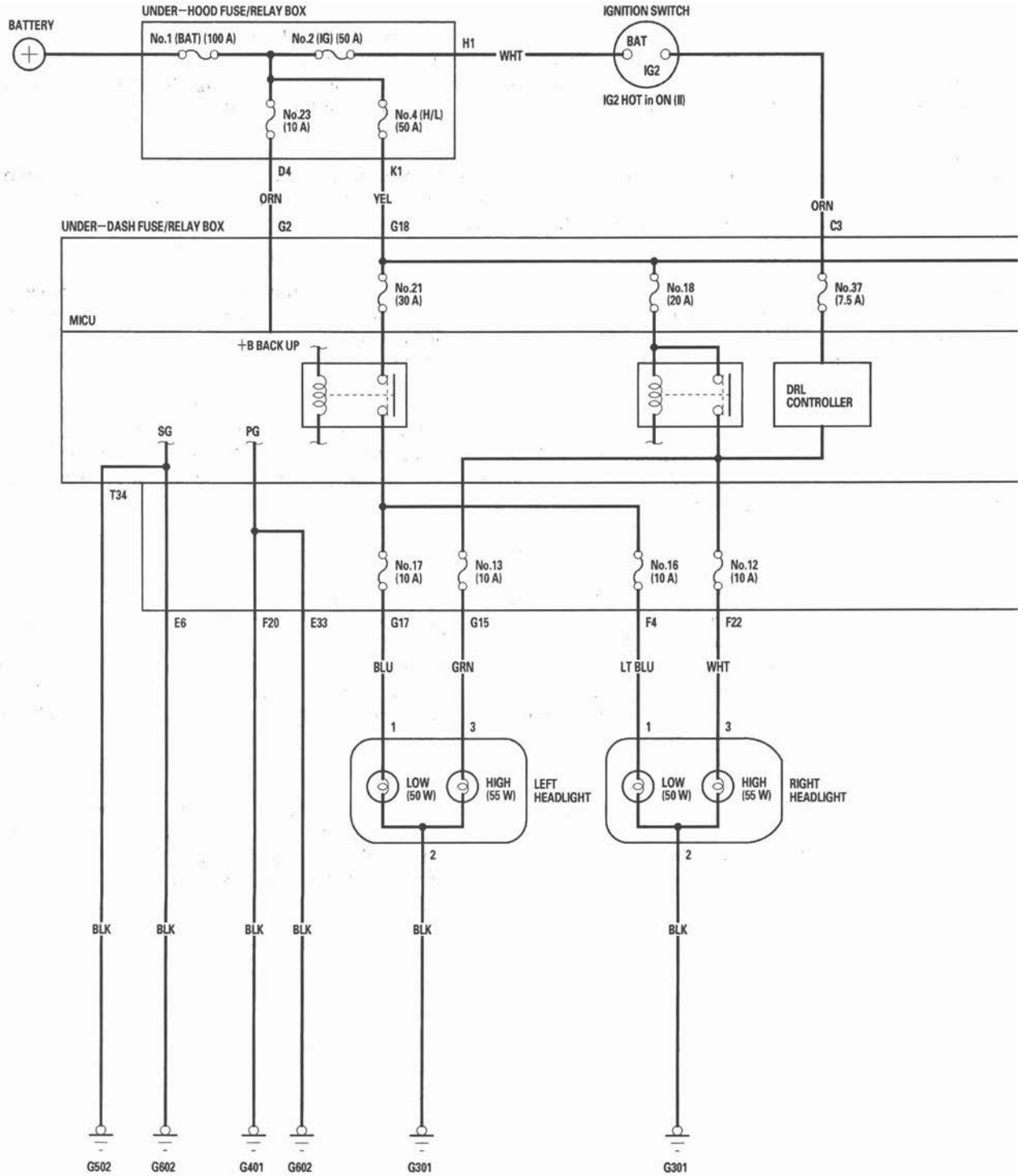

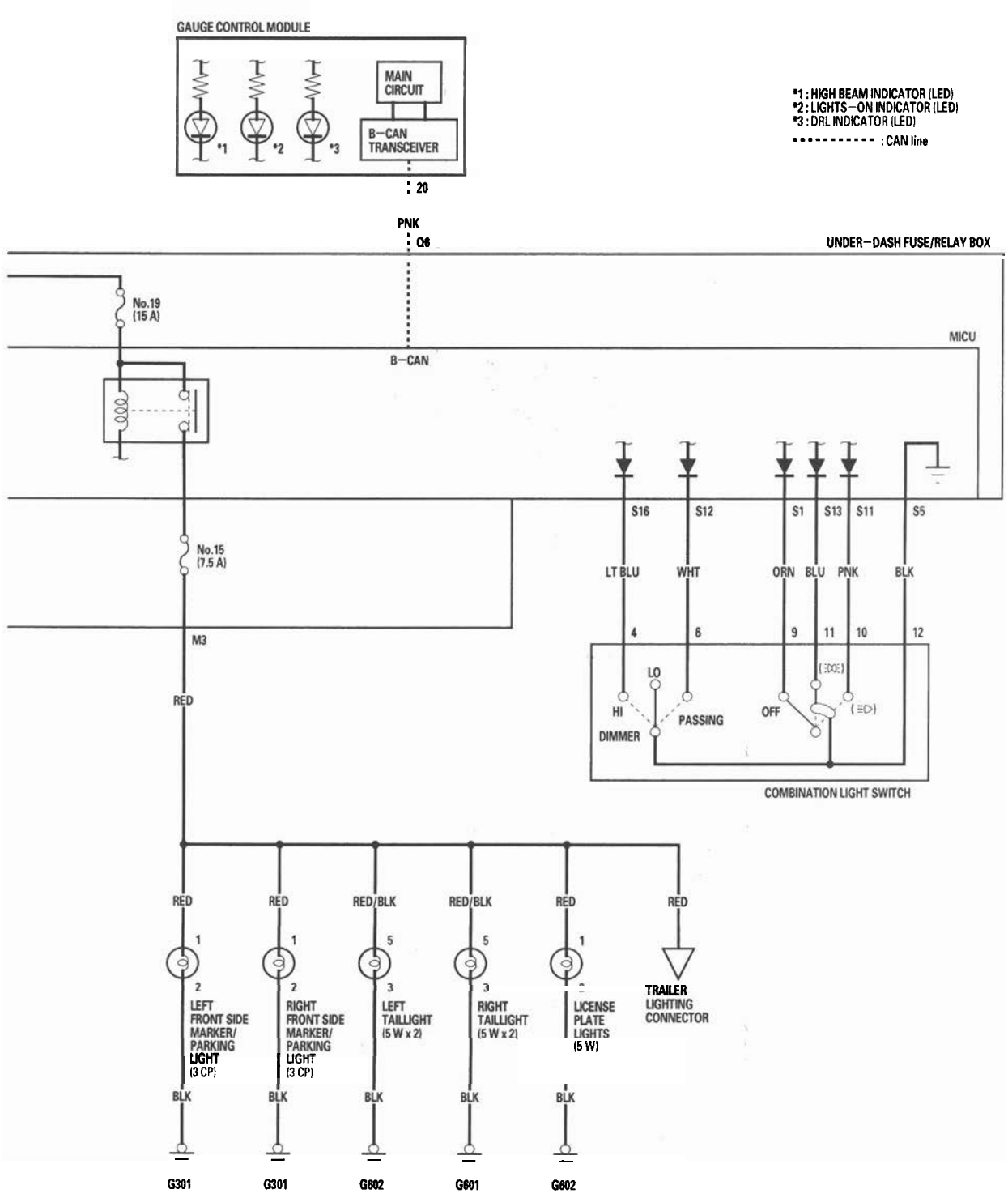
GAUGE CONTROL MODULE
MAIN CIRCUIT
B–CAN TRANSCEIVER
*1
*2
*3
20
*1 : HIGH BEAM INDICATOR (LED)
*2 : LIGHTS–ON INDICATOR (LED)
*3 : DRL INDICATOR (LED)
: CAN line
PNK
Q6
UNDER–DASH FUSE/RELAY BOX
No.19 (15 A)
MICU
B–CAN
No.15 (7.5 A)
M3
RED
S16
S12
S1
S13
S11
S5
LT BLU
WHT
ORN
BLU
PNK
BLK
4
6
9
11
10
12
LO
HI
PASSING
DIMMER
OFF
COMBINATION LIGHT SWITCH
RED
RED
RED/BLK
RED/BLK
RED
RED
1
1
5
5
1
2
2
3
3
LEFT FRONT SIDE MARKER/ PARKING LIGHT (3 CP)
RIGHT FRONT SIDE MARKER/ PARKING LIGHT (3 CP)
LEFT TAILLIGHT (5 W x 2)
RIGHT TAILLIGHT (5 W x 2)
LICENSE PLATE LIGHTS (5 W)
TRAILER LIGHTING CONNECTOR
BLK
BLK
BLK
BLK
BLK
G301
G301
G602
G601
G602

Circuit Diagram - Brake Lights

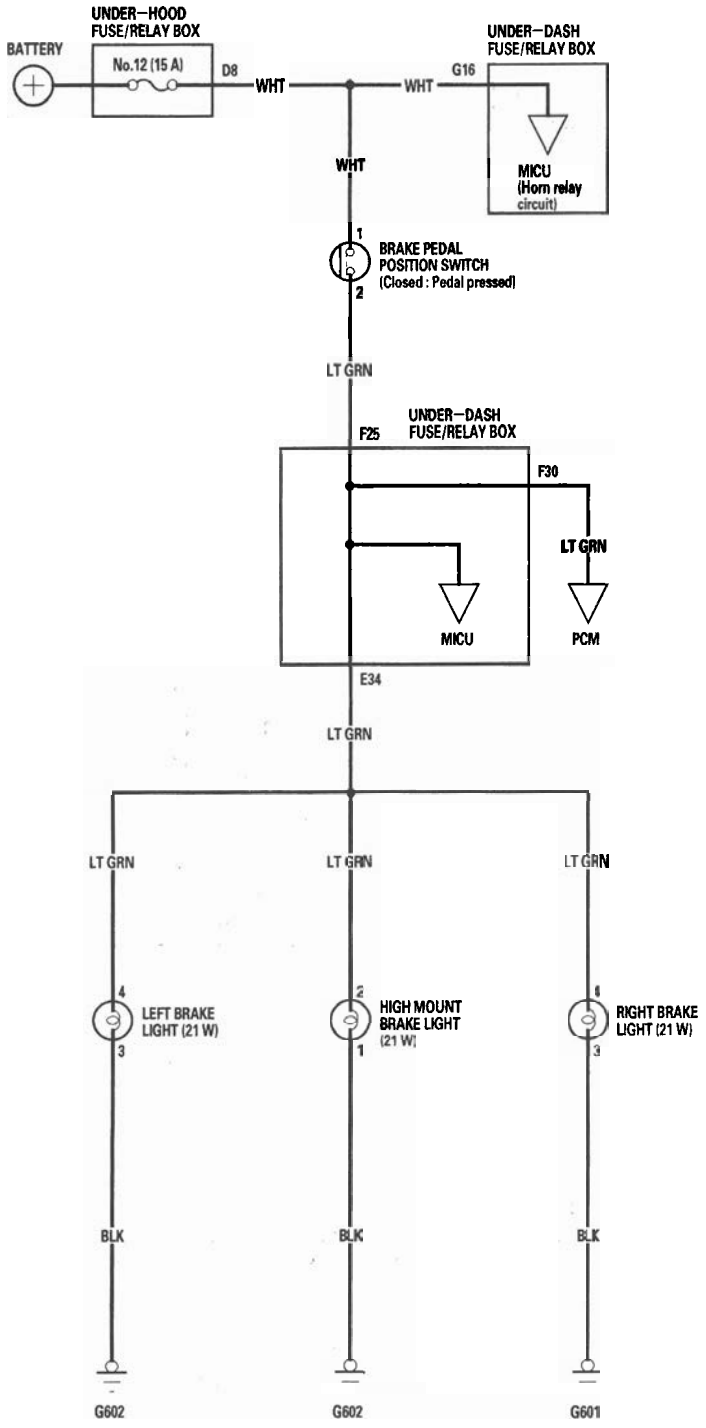

Circuit Diagram - Back-up Lights

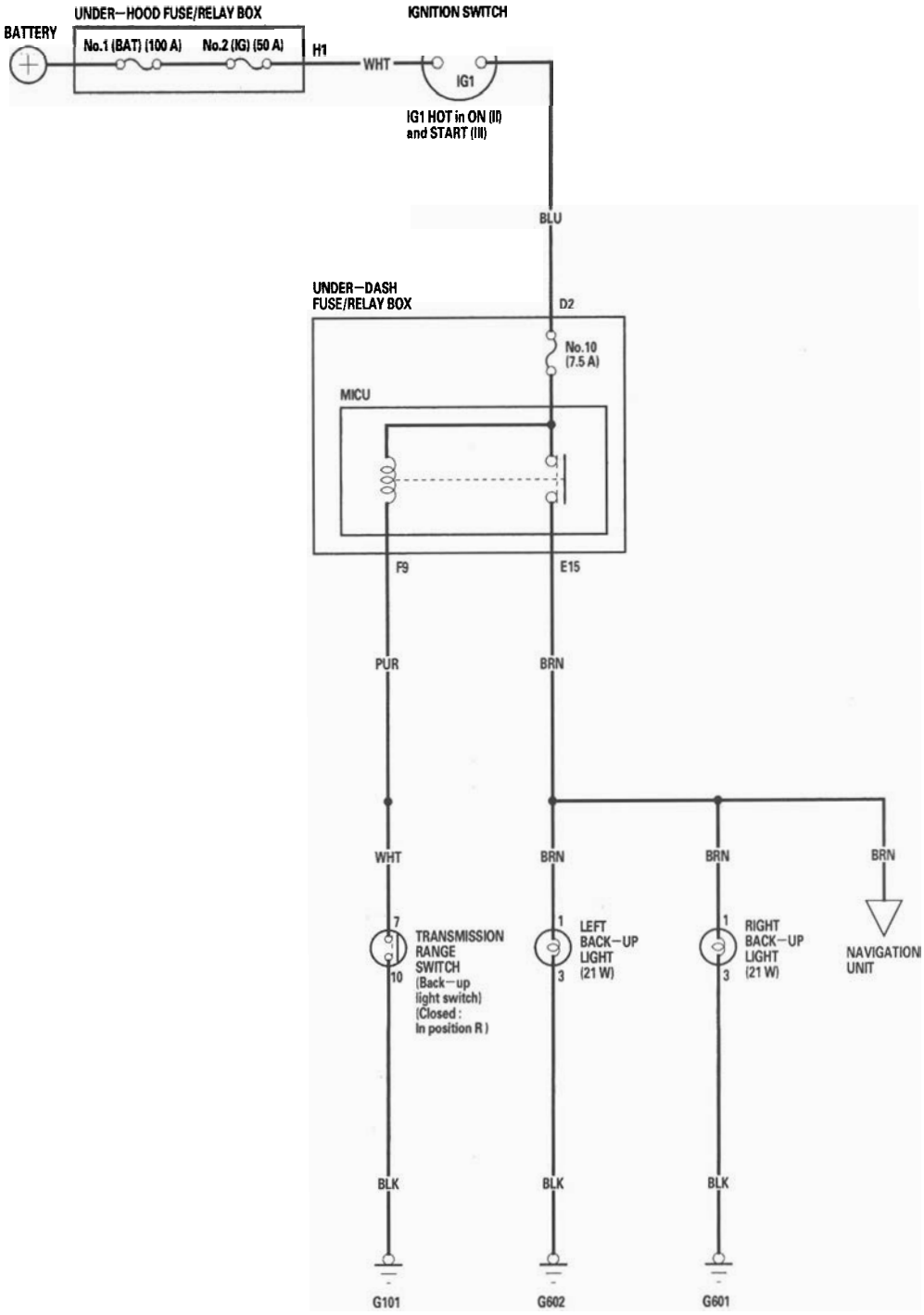

DTC Troubleshooting

DTC B1078: Daytime Running Lights Signal Error (Canada)

DTC B1079: Daytime Running Lights Signal Error (USA)

NOTE: If you are troubleshooting multiple DTCs, be sure to follow the instructions in B-CAN System Diagnosis Test Mode A (see page 22-92).

1. Turn the ignition switch ON (II).
2. Pull the parking brake lever.
3. Clear the DTCs with the HDS.
4. Release the parking brake lever.
5. Turn the ignition switch OFF, and then back ON (II).
6. Check for DTCs with the HDS.

   Is DTC B1078 (Canada) or B1079 (USA) indicated?

   YES—Go to step 7.

   NO—Intermittent failure, the daytime running lights system is OK at this time. Check for loose or poor connections.■

7. Turn the headlight switch ON (high beam).

   Do both headlights (high beam) come on?

   YES—Go to step 8.

   NO—Go to step 10.

8. Turn the ignition switch OFF.
9. Measure voltage between the No. 6 and No. 33 terminals of the under-dash fuse/relay box connector E (42P) and body ground, and between the No. 20 terminal of the under-dash fuse/relay box connector F (34P) and body ground individually.

UNDER-DASH FUSE/RELAY BOX CONNECTOR E (42P)

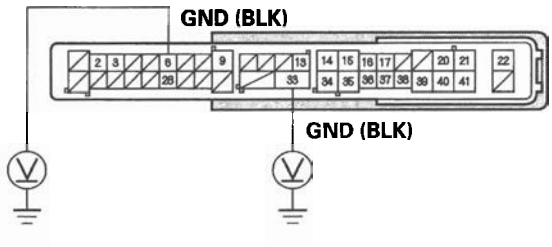

Wire side of female terminals

UNDER-DASH FUSE/RELAY BOX CONNECTOR F (34P)

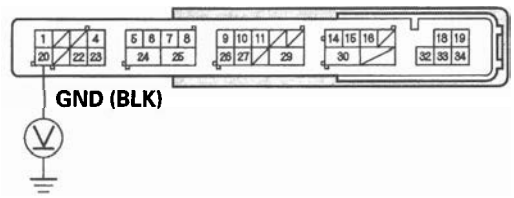

Wire side of female terminals

Is there less than 0.5 V?

YES—Faulty MICU; replace the under-dash fuse/relay box (see page 22-64).■

NO—Repair an open in the BLK wire or poor ground (G401 and G602).■

10. Turn the ignition and headlight switches OFF.

11. Check the No. 12, No. 13, and No. 18 fuses in the under-dash fuse/relay box.

Are all of the fuses OK?

YES—Go to step 12.

NO—Replace the blown fuse and recheck. If the No. 18 (20 A) fuse is blown again, replace the under-dash fuse/relay box. If the No. 12 (10 A) or No. 13 (10 A) fuse is blown again, repair a short in the wire between the under-dash fuse/relay box and the appropriate headlight (high beam).■

12. Check the headlight bulbs.

Are the headlight bulbs OK?

YES—Go to step 13.

NO—Replace the faulty bulb.■

13. Disconnect the under-dash fuse/relay box connectors F (34P) and G (21P).

14. Disconnect both of the headlight 3P connectors.

15. Check for continuity between the No. 3 terminal of the right headlight 3P connector and No. 22 terminal of the under-dash fuse/relay box connector F (34P).

UNDER-DASH FUSE/RELAY BOX CONNECTOR F (34P)
Wire side of female terminals

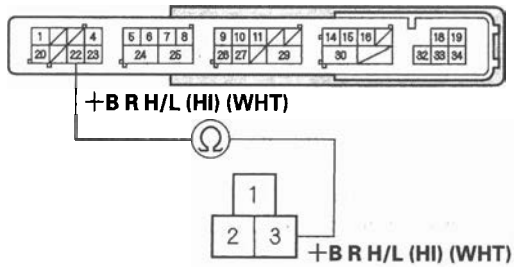

RIGHT HEADLIGHT 3P CONNECTOR
Wire side of female terminals

Is there continuity?

YES—Go to step 16.

NO—Repair an open in the wire between the right headlight (high beam) and the under-dash fuse/relay box.■

16. Check for continuity between the No. 3 terminal of the left headlight 3P connector and No. 15 terminal of the under-dash fuse/relay box connector G (21P).

UNDER-DASH FUSE/RELAY BOX CONNECTOR G (21P)
Wire side of female terminals

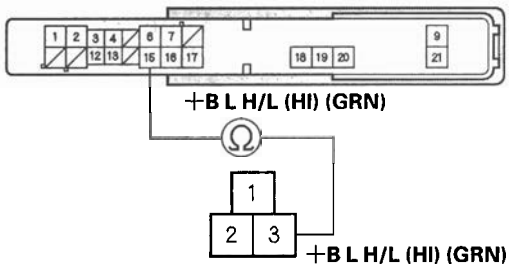

LEFT HEADLIGHT 3P CONNECTOR
Wire side of female terminals

Is there continuity?

YES—Go to step 17.

NO—Repair an open in the wire between the left headlight (high beam) and the under-dash fuse/relay box.■

17. Check for continuity between the No. 2 terminal of each headlight 3P connector and body ground.

HEADLIGHT 3P CONNECTOR

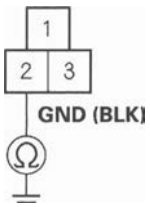

Wire side of female terminals

Is there continuity?

YES—Faulty MICU; replace the under-dash fuse/relay box (see page 22-64).■

NO—Repair an open in the BLK wire or poor ground (G301).■

DTC Troubleshooting (cont'd)

DTC B1275: Combination Light Switch OFF Position Circuit Malfunction

DTC B1276: Combination Light Switch Parking (SMALL) Position Circuit Malfunction

DTC B1278: Combination Light Switch ON Position Circuit Malfunction

NOTE: If you are troubleshooting multiple DTCs, be sure to follow the instructions in B-CAN System Diagnosis Test Mode A (see page 22-92).

1. Clear the DTCs with the HDS.
2. Turn the ignition switch OFF, and then back ON (II).
3. Turn the combination light switch PARKING (SMALL) and ON (low beam) position, and then OFF position.
4. Clear the DTCs with the HDS.

   Is DTC B1275, B1276, or B1278 indicated?

   YES—Go to step 5.

   NO—Intermittent failure, the system is OK at this time. Check for loose or poor connections. ■
5. Select LIGHTING from the BODY ELECTRICAL system select menu, and enter the DATA LIST.
6. Check each combination light switch position value with the DATA LIST menu.

   When the combination light switch is turned OFF

Data List	Value
Headlight Switch (OFF)	ON
Headlight Switch (PARKING)	OFF
Headlight Switch (HEADLIGHT)	OFF

   When the combination light switch is turned to PARKING (SMALL)

Data List	Value
Headlight Switch (OFF)	OFF
Headlight Switch (PARKING)	ON
Headlight Switch (HEADLIGHT)	OFF

   When the combination light switch is turned ON (HEADLIGHT)

Data List	Value
Headlight Switch (OFF)	OFF
Headlight Switch (PARKING)	ON
Headlight Switch (HEADLIGHT)	ON

   Are all data list values correct?

   YES—Faulty MICU; replace the under-dash fuse/relay box (see page 22-64).

   NO—Go to step 7.
7. Turn the ignition switch OFF.
8. Disconnect the combination light switch 12P connector.
9. Turn the ignition switch ON (II).
10. Select LIGHTING from the BODY ELECTRICAL system select menu, and enter the DATA LIST.
11. Check each combination light switch position value with the DATA LIST menu.

    When the combination light switch is turned OFF

Data List	Value
Headlight Switch (OFF)	OFF
Headlight Switch (PARKING)	OFF
Headlight Switch (HEADLIGHT)	OFF

    Are all data list values indicated OFF?

    YES—Go to step 15.

    NO—Go to step 12.

12. Turn the ignition switch OFF.

13. Disconnect the under-dash fuse/relay box connector S (20P).

14. Check for continuity between the body ground and the under-dash fuse/relay box connector S (20P) No. 1, No. 11, and No. 13 terminals individually.

UNDER-DASH FUSE/RELAY BOX CONNECTOR S (20P)

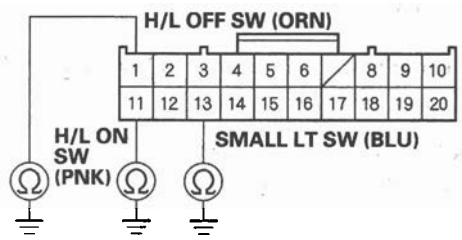

Wire side of female terminals

Is there continuity?

YES—Repair a short to ground in the wire. ■

NO—Faulty MICU; replace the under-dash fuse/relay box (see page 22-64). ■

15. Turn the ignition switch OFF.

16. Do the combination light switch test (see page 22-161).

Is the combination light switch OK?

YES—Go to step 17.

NO—Replace the combination light switch. ■

17. Disconnect the under-dash fuse/relay box connectors S (20P).

18. Check for continuity between the under-dash fuse/relay box connector S (20P) terminals and the combination light switch 12P connector terminals as shown:

Under-dash fuse/relay box connector S (20P)	Combination light switch 12P connector
1	9
5	12
11	10
13	11

COMBINATION LIGHT SWITCH 12P CONNECTOR
Wire side of female terminals

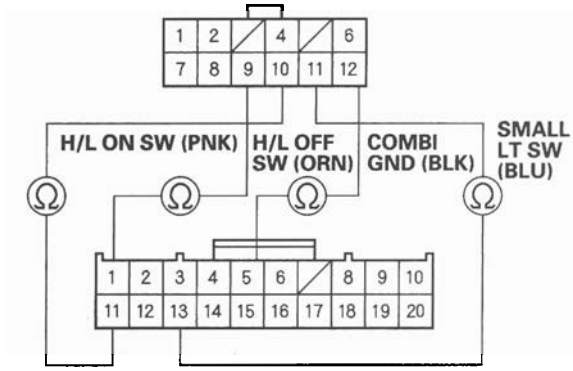

UNDER-DASH FUSE/RELAY BOX CONNECTOR S (20P)
Wire side of female terminals

Is there continuity?

YES—Go to step 19.

NO—Repair an open in the wire. ■

19. Check for continuity between the under-dash fuse/relay box connector S (20P) terminals as shown:

From terminal	To terminal
1	11, 13
11	13

Is there continuity?

YES—Repair a short between the wire. ■

NO—Faulty MICU; replace the under-dash fuse/relay box (see page 22-64). ■

DTC Troubleshooting (cont'd)

DTC B1279: Headlight Switch DIMMER Position Circuit Malfunction

NOTE: If you are troubleshooting multiple DTCs, be sure to follow the instructions in B-CAN System Diagnosis Test Mode A (see page 22-92).

1. Clear the DTCs with the HDS.
2. Turn the ignition switch OFF, and then back ON (II).
3. Turn the combination light (headlight) switch ON.
4. Change the dimmer switch from low beam to high beam.
5. Turn the combination light switch OFF, and then PASSING position.
6. Check for DTCs with the HDS.

   Is DTC B1279 indicated?

   YES—Go to step 7.

   NO—Intermittent failure, the system is OK at this time. Check for loose or poor connections. ■
7. Select LIGHTING from the BODY ELECTRICAL system select menu, then enter the DATA LIST.
8. Check each combination light switch position value with the DATA LIST menu.

   When the passing switch is operated

Data List	Value
Headlight Switch (PASSING)	ON
Headlight Switch (High beam)	OFF

   When the headlight switch is turned ON, and dimmer switch changed from low beam to high beam

Data List	Value
Headlight Switch (PASSING)	OFF
Headlight Switch (High beam)	ON
Headlight Switch (HEADLIGHT)	OFF

   Are all data list values correct?

   YES—Faulty MICU; replace the under-dash fuse/relay box (see page 22-64). ■

   NO—Go to step 9.
9. Turn the ignition switch OFF.
10. Disconnect the combination light switch 12P connector.
11. Turn the ignition switch ON (II).
12. Select the BODY ELECTRICAL system select menu, then enter the LIGHTING SYSTEM.
13. Check each combination light switch position value with the DATA LIST menu.

    When the combination light switch is turned OFF

Data List	Value
Headlight Switch (PASSING)	OFF
Headlight Switch (High beam)	OFF
Headlight Switch (HEADLIGHT)	OFF

    Are all data list values indicated OFF?

    YES—Go to step 17.

    NO—Go to step 14.
14. Turn the ignition switch OFF.
15. Disconnect the under-dash fuse/relay box connector S (20P).
16. Check for continuity between the body ground and the under-dash fuse/relay box connector S (20P) No. 11, No. 12, and No. 16 terminals individually.

    UNDER-DASH FUSE/RELAY BOX CONNECTOR S (20P)

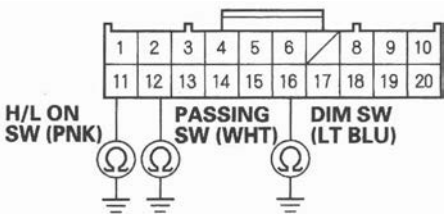

Wire side of female terminals

Is there continuity?

YES—Repair a short to ground in the wire. ■

NO—Faulty MICU; replace the under-dash fuse/relay box (see page 22-64). ■

17. Turn the ignition switch OFF.

18. Do the combination light switch test (see page 22-161).

    Is the combination light switch OK?

    YES—Go to step 19.

    NO—Replace the combination light switch. ■

19. Disconnect the under-dash fuse/relay box connectors S (20P).

20. Check for continuity between the under-dash fuse/relay box connector S (20P) terminals and the combination light switch 12P connector terminals as shown:

Under-dash fuse/ relay box connector S (20P)	Combination light switch 12P connector
5	12
11	10
12	6
16	4

UNDER-DASH FUSE/RELAY BOX CONNECTOR S (20P)
Wire side of female terminals

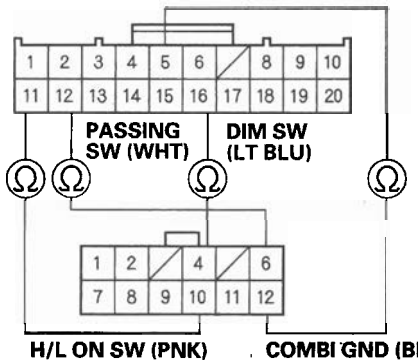

COMBINATION LIGHT SWITCH 12P CONNECTOR
Wire side of female terminals

Is there continuity?

YES—Go to step 21.

NO—Repair an open in the wire. ■

21. Check for continuity between the under-dash fuse/relay box connector S (20P) terminals as shown:

From terminal	To terminal
11	12, 14
12	14

Is there continuity?

YES—Repair a short between the wire. ■

NO—Faulty MICU; replace the under-dash fuse/relay box (see page 22-64). ■

DTC Troubleshooting (cont'd)

DTC B1280: Turn Signal Switch Circuit Malfunction

NOTE: If you are troubleshooting multiple DTCs, be sure to follow the instructions in B-CAN System Diagnosis Test Mode A (see page 22-92).

1. Clear the DTCs with the HDS.
2. Turn the ignition switch OFF, and then back ON (II).
3. Operate the turn signal switch in left and right positions.
4. Check for DTCs with the HDS.

   Is DTC B1280 indicated?

   YES—Go to step 5.

   NO—Intermittent failure, the system is OK at this time. Check for loose or poor connections.■

5. Select LIGHTING from the BODY ELECTRICAL system select menu, then enter the DATA LIST.
6. Check each turn signal switch position value with the DATA LIST menu.

   When the turn signal switch is in left position

Data List	Value
Turn Signal Switch (LEFT)	ON
Turn Signal Switch (RIGHT)	OFF

   When the turn signal switch is in right position

Data List	Value
Turn Signal Switch (LEFT)	OFF
Turn Signal Switch (RIGHT)	ON

   Are all data list values correct?

   YES—Faulty MICU; replace the under-dash fuse/relay box (see page 22-64).■

   NO—Go to step 7

7. Turn the ignition switch OFF.
8. Disconnect the combination light switch 12P connector.
9. Disconnect the under-dash fuse/relay box connector S (20P).
10. Check for continuity between the body ground and the under-dash fuse/relay box connector S (20P) No. 18, and No. 19 terminals.

UNDER-DASH FUSE/RELAY BOX CONNECTOR S (20P)

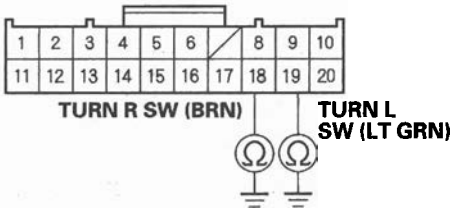

Wire side of female terminals

Is there continuity?

YES—Repair a short to ground in the wire.■

NO—Go to step 11.

11. Check for continuity between the under-dash fuse/relay box connector S (20P) No. 18 and No. 19 terminals.

UNDER-DASH FUSE/RELAY BOX CONNECTOR S (20P)

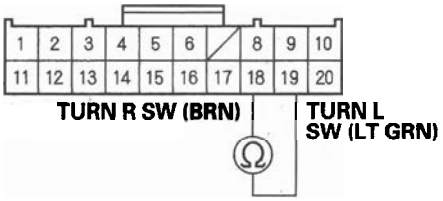

Wire side of female terminals

Is there continuity?

YES—Repair a short between the wires.■

NO—Replace the combination light switch.■

MICU Input Test

NOTE:
- The MICU turns on the headlights (high beams) in a dim mode for the daytime running lights under the following conditions:
  - The ignition switch is ON (II)
  - The headlight switch is OFF
  - The parking brake is released (parking brake switch OFF)
- If the vehicle is equipped with an optional remote control engine start system (Canada), the daytime running lights will not function when started with the remote start.

1. Before testing, troubleshoot the B-CAN System Diagnosis Test Mode A (see page 22-92).

2. Check the No. 12 (10 A), No. 13 (10 A), No. 15 (7.5 A), No. 16 (10 A), No. 17 (10 A), No. 18 (20 A), No. 19 (15 A), No. 21 (30 A), and No. 37 (7.5 A) fuses in the under-dash fuse/relay box. If any fuse is blown, replace it and go to step 3.

3. Disconnect the under-dash fuse/relay box connectors E, F, G, M, S, and T.

   NOTE: All connector views are wire side of female terminals.

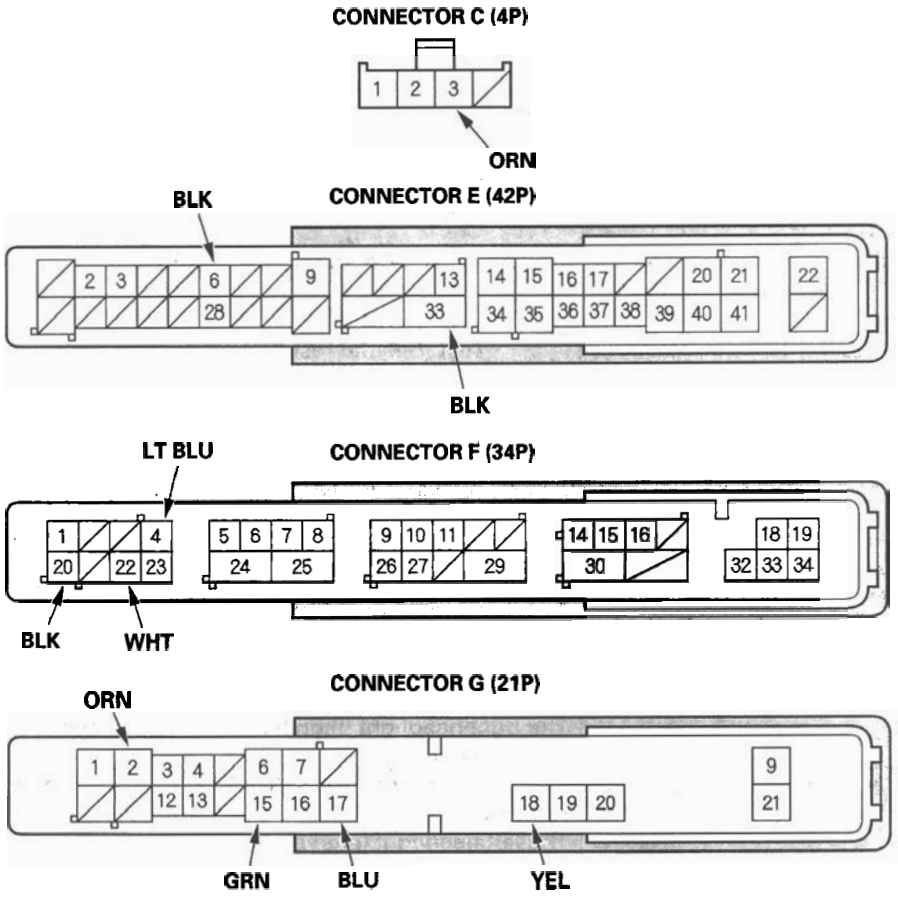

(cont'd)

MICU Input Test (cont'd)

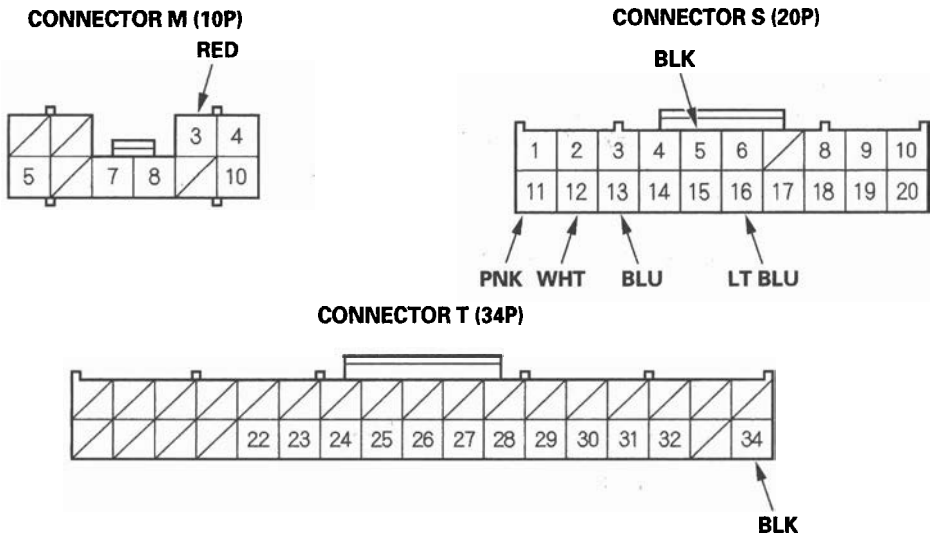

4. Inspect the connector and socket terminals to be sure they are all making good contact.

   - If the terminals are bent, loose or corroded, repair them as necessary and recheck the system.
   - If the terminals look OK, go to step 5.

5. With the connectors still disconnected, make these input tests at the appropriate connector.

   - If any test indicates a problem, find and correct the cause, then recheck the system.
   - If all the input tests prove OK, go to step 6.

Cavity	Wire	Test condition	Test: Desired result	Possible cause if result is not obtained
M3	RED	Under all conditions	Connect battery power to the M3 terminal: The front parking lights, taillights, and license plate lights should come on.	• Poor ground (G301, G601, G602) • Blown bulb • An open in the wire
F4	LT BLU	Under all conditions	Connect battery power to the F4 terminal: The right headlight (low beam) should come on.	• Poor ground (G301) • Blown bulb • An open in the wire
F22	WHT	Under all conditions	Connect battery power to the F22 terminal: The right headlight (high beam) should come on.	• Poor ground (G301) • Blown bulb • An open in the wire
G15	GRN	Under all conditions	Connect battery power to the G15 terminal: The left headlight (high beam) should come on.	• Poor ground (G301) Blown bulb • An open in the wire
G17	BLU	Under all conditions	Connect battery power to the G17 terminal: The left headlight (low beam) should come on.	• Poor ground (G301) • Blown bulb • An open in the wire

6. Reconnect the connectors, and do these input tests at the connectors.

- If any test indicates a problem, find and correct the cause, then recheck the system.
- If all the input tests prove OK, the MICU is faulty; replace the under-dash fuse/relay box (see page 22-64).

Cavity	Wire	Test condition	Test: Desired result	Possible cause if result is not obtained
E6	BLK	Under all conditions	Check for voltage to ground: There should be less than 0.5 V.	• Poor ground (G602) • An open in the wire
E33	BLK	Under all conditions	Check for voltage to ground: There should be less than 0.5 V.	• Poor ground (G602) • An open in the wire
F20	BLK	Under all conditions	Check for voltage to ground: There should be less than 0.5 V.	• Poor ground (G401) • An open in the wire
T34	BLK	Under all conditions	Check for voltage to ground: There should be less than 0.5 V.	• Poor ground (G502) • An open in the wire
G2	ORN	Under all conditions	Check for voltage to ground: There should be battery voltage.	• Blown No. 23 (10 A) fuse in the under-hood fuse/relay box • An open in the wire
G18	YEL	Under all conditions	Check for voltage to ground: There should be battery voltage.	Blown No. 4 (H/L) (50 A) fuse in the under-hood fuse/relay box • An open in the wire
C3	ORN	Ignition switch ON (II)	Check for voltage to ground: There should be battery voltage.	• Blown No. 2 (50 A) fuse in the under-hood fuse/relay box • Faulty ignition switch • An open in the wire

(cont'd)

MICU Input Test (cont'd)

Cavity	Wire	Test condition	Test: Desired result	Possible cause if result is not obtained
S1 · S5	ORN · BLK	Combination light switch OFF	Check for voltage between S1 and S5 terminals: There should be less than 1 V.	• Faulty combination light switch • An open in the wire
		Combination light switch in any other position than OFF	Check for voltage between S1 and S5 terminals: There should be 5 V or more.	• Faulty combination light switch • A short to ground in the wire
S11 · S5	PNK · BLK	Combination light switch (Headlight position) ON	Check for voltage between S11 and S5 terminals: There should be less than 1 V.	• Faulty combination light switch • An open in the wire
		Combination light switch OFF	Check for voltage between S11 and S5 terminals: There should be 5 V or more.	• Faulty combination light switch • A short to ground in the wire
S12 · S5	WHT · BLK	Combination light switch lever pulled (Passing)	Check for voltage between S12 and S5 terminals: There should be less than 1 V.	• Faulty combination light switch • An open in the wire
		Combination light switch lever released from passing position	Check for voltage between S12 and S5 terminals: There should be 5 V or more.	• Faulty combination light switch • A short to ground in the wire
S13 · S5	BLU · BLK	Combination light switch (SMALL position) ON	Check for voltage between S13 and S5 terminals: There should be less than 1 V.	• Faulty combination light switch • An open in the wire
		Combination light switch OFF	Check for voltage between S13 and S5 terminals: There should be 5 V or more.	• Faulty combination light switch • A short to ground in the wire
S16 · S5	LT BLU · BLK	Combination light switch (Dimmer) in high beam position	Check for voltage between S16 and S5 terminals: There should be less than 1 V.	• Faulty combination light switch • An open in the wire
		Combination light switch (Dimmer) in low beam position	Check for voltage between S16 and S5 terminals: There should be 5 V or more.	• Faulty combination light switch • A short to ground in the wire

Combination Light Switch Test/Replacement

1. Remove the dashboard lower cover (see page 20-101).
2. Remove the steering column covers (see page 17-25).
3. Disconnect the 12P connector (A) from the combination light switch (B).

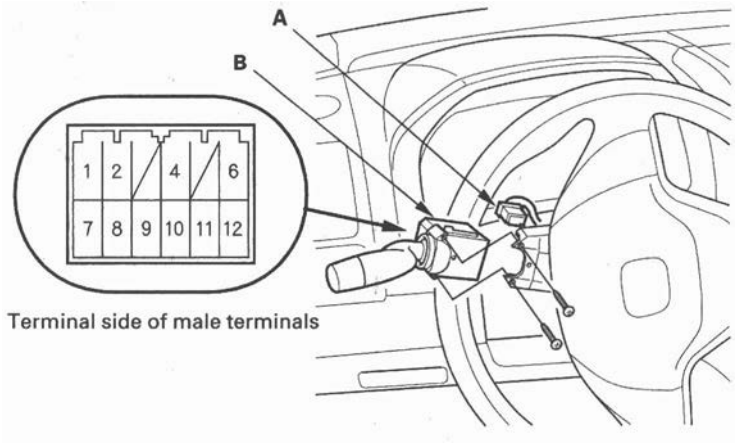

4. Remove the two screws, then slide out the combination light switch.
5. Inspect the connector terminals to be sure they are all making good contact.
   - If the terminals are bent, loose or corroded, repair them as necessary, and recheck the system.
   - If the terminals look OK, check for continuity between the terminals in each switch position according to the tables.

Light switch

Position \ Terminal		4	6	9	10	11	12
Headlight switch	OFF			○			○
	≡D					○	○
	≡D LOW				○	○	○
	≡D HIGH	○			○	○	○
Passing switch	OFF						
	ON		○				○

Turn signal switch

Position \ Terminal	1	2	12
LEFT		○	○
Neutral			
RIGHT	○		○

6. If the continuity is not as specified, replace the switch.

Headlight Adjustment

⚠CAUTION

Headlights become very hot during use; do not touch them or any attaching hardware immediately after they have been turned off.

Before adjusting the headlights:

- Park the vehicle on a level surface.
- Make sure the tire pressures are correct.
- The driver or someone who weighs the same should sit in the driver's seat.

1. Clean the outer lens so that you can see the center (A) of the headlights.

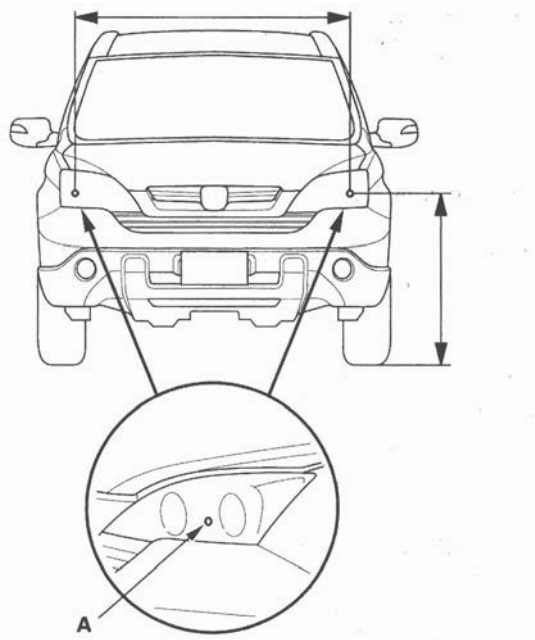

2. Park the vehicle in front of a wall or a screen (A).

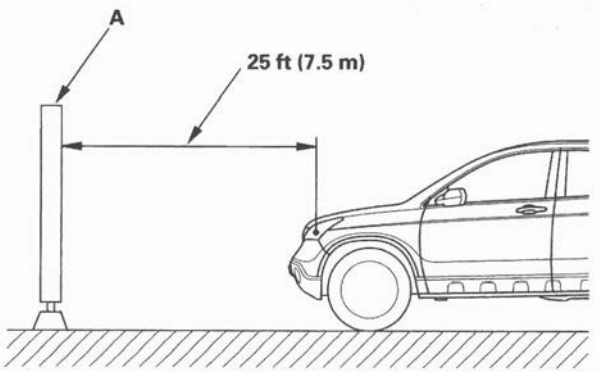

3. Turn the low beams on.

4. Determine if the headlights are aimed properly.

   Vertical adjustment:
   Measure the height of the headlights (A).
   Adjust the cut line (B) to the light's height.

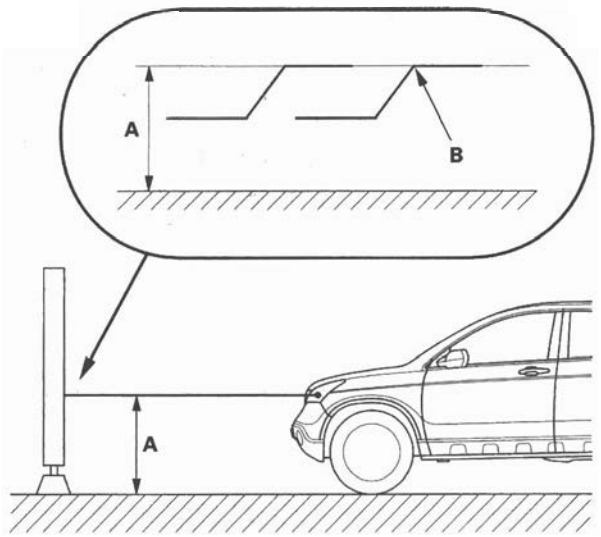

5. If necessary, open the hood and adjust the headlights by turning the vertical adjuster.

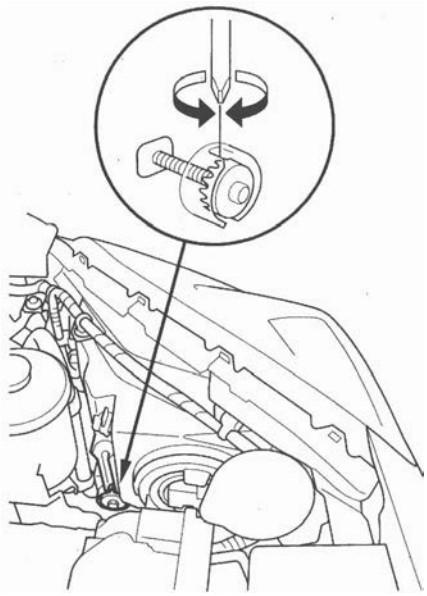

Headlight Replacement

1. Remove the front bumper (see page 20-149) and the front fender trim (see page 20-165).
2. Remove the connectors (A) from the headlight assembly (B).

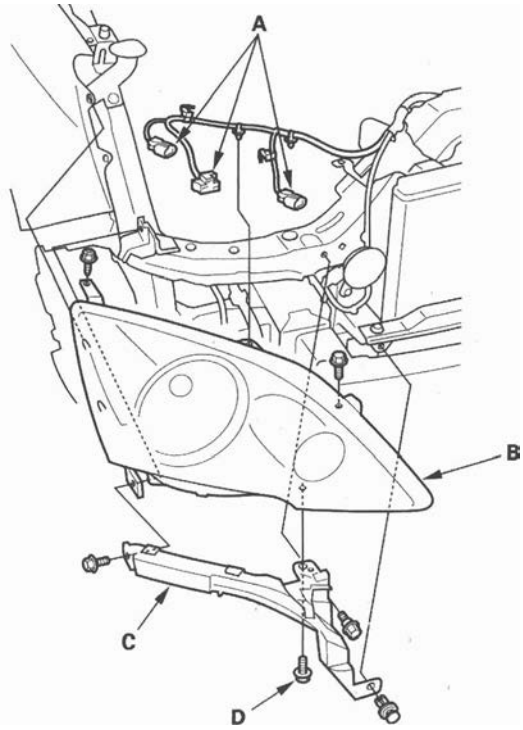

3. Remove the harness clips, screw, clip, and three bolts, then remove the headlight assembly with the corner upper beam (C).
4. Remove the bolt (D) and the corner upper beam from the headlight.
5. Install the headlight in the reverse order of removal.
6. After replacement, adjust the headlight.

Bulb Replacement

Headlight

1. Disconnect the 3P connector (A), then remove the rubber cap (B) from the headlight.

Headlight (high/low beam): 55/50 W

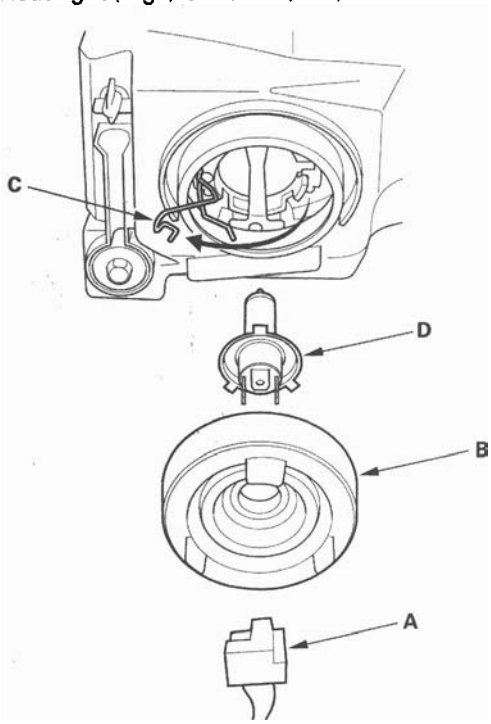

2. Pull the retaining spring (C) away from the bulb, then remove the bulb (D).
3. Install a new bulb in the reverse order of removal.

(cont'd)

Bulb Replacement (cont'd)

Front Side Marker/Parking Lights

1. Disconnect the 2P connector (A) from the front side marker/parking light.

Front Side Marker/Parking Lights:3 CP

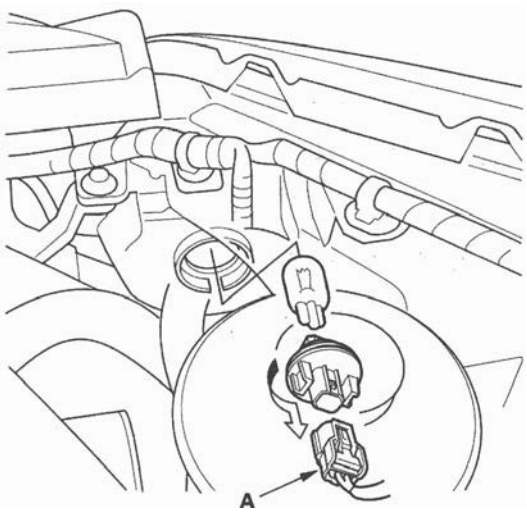

2. Turn the bulb socket 45° counterclockwise to remove the bulb.
3. Install a new bulb in the reverse order of removal.

Front Turn Signal Lights

1. Disconnect the 2P connector (A) from the front turn signal light.

Front Turn Signal Light: 21 W

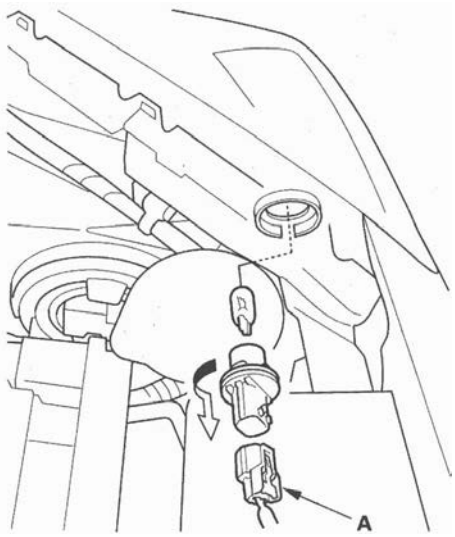

2. Turn the bulb socket 45° counterclockwise to remove the bulb.
3. Install a new bulb in the reverse order of removal.

Taillight Replacement

1. Open the tailgate.
2. Remove the caps and mounting bolts from the taillight (A), then carefully pull off the taillight.

Taillight:	**5 W**
Brake Light/Taillight:	**21/5 W**
Rear Turn Signal Light:	**21 W**
Back-up Light:	**21 W**

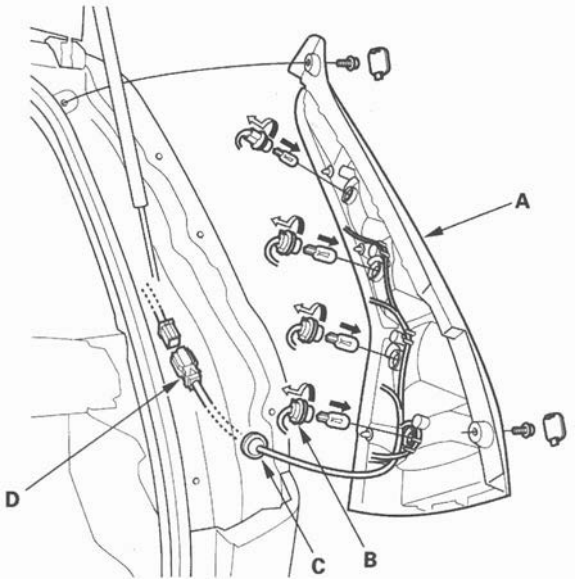

3. Turn the bulb sockets (B) 45° counterclockwise to remove them from the housing.
4. If replacement of the taillight harness is necessary, remove the grommet (C), and disconnect the 6P connector (D) from the side wire harness.
5. Install the taillight in the reverse order of removal.

License Plate Light Replacement

1. Open the tailgate and remove the tailgate lower trim (see page 20-179).
2. Disconnect the 2P connector (A) from the license plate light.

License Plate Light: 5 W

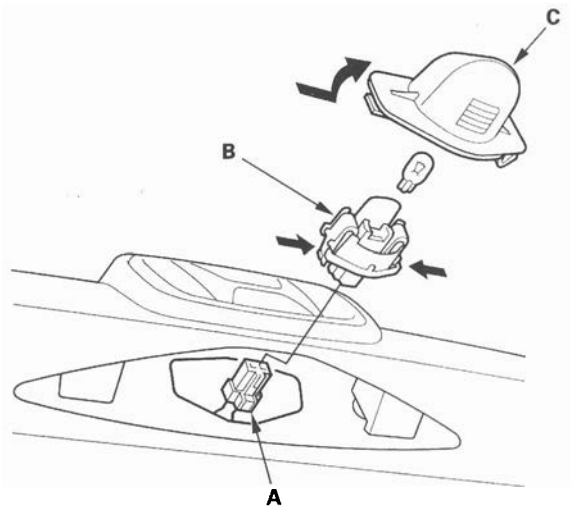

3. Release the bulb socket (B) from the lens (C) by pressing on the tabs.
4. Remove the lens from the tailgate by pressing on the tabs.
5. Install the light in the reverse order of removal.

High Mount Brake Light Replacement

1. Open the tailgate, and remove the tailgate upper trim panel (see page 20-78).
2. Disconnect the 2P connector (A) from the high mount brake light.

High Mount Brake Light: 21 W

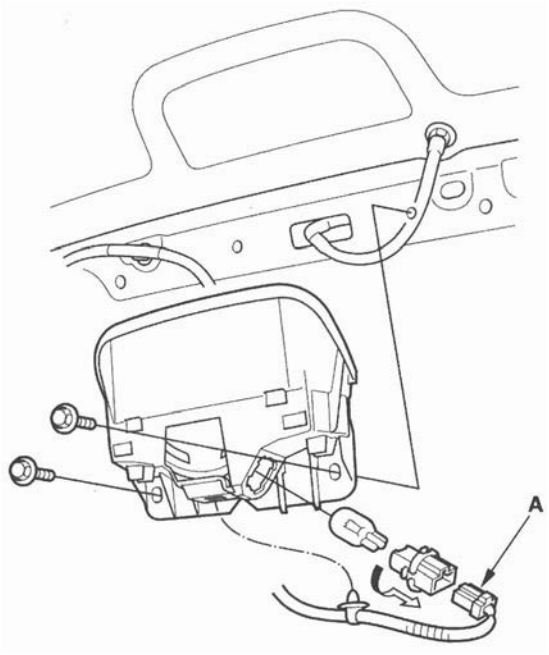

3. Turn the bulb socket 45° counterclockwise to remove the bulb.
4. Remove the two bolts, then remove the housing.
5. Install the light in the reverse order of removal.

Brake Pedal Position Switch Test

1. Disconnect the 4P connector (A) from the brake pedal position switch (B).

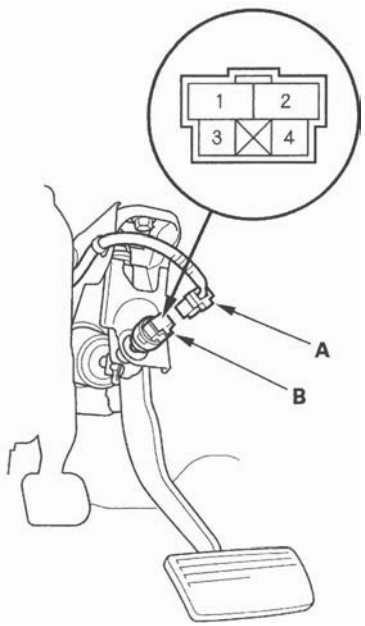

2. Check for continuity between the No. 1 and No. 2 terminals.
   - There should be continuity when the brake pedal is pressed.
   - There should be no continuity when the brake pedal is released.
3. Check for continuity between the No. 3 and No. 4 terminals.
   - There should be no continuity when the brake pedal is pressed.
   - There should be continuity when the brake pedal is released.
4. If necessary, adjust or replace the switch, or adjust the pedal height (see page 19-6).

Turn Signal/Hazard Flasher

Component Location Index

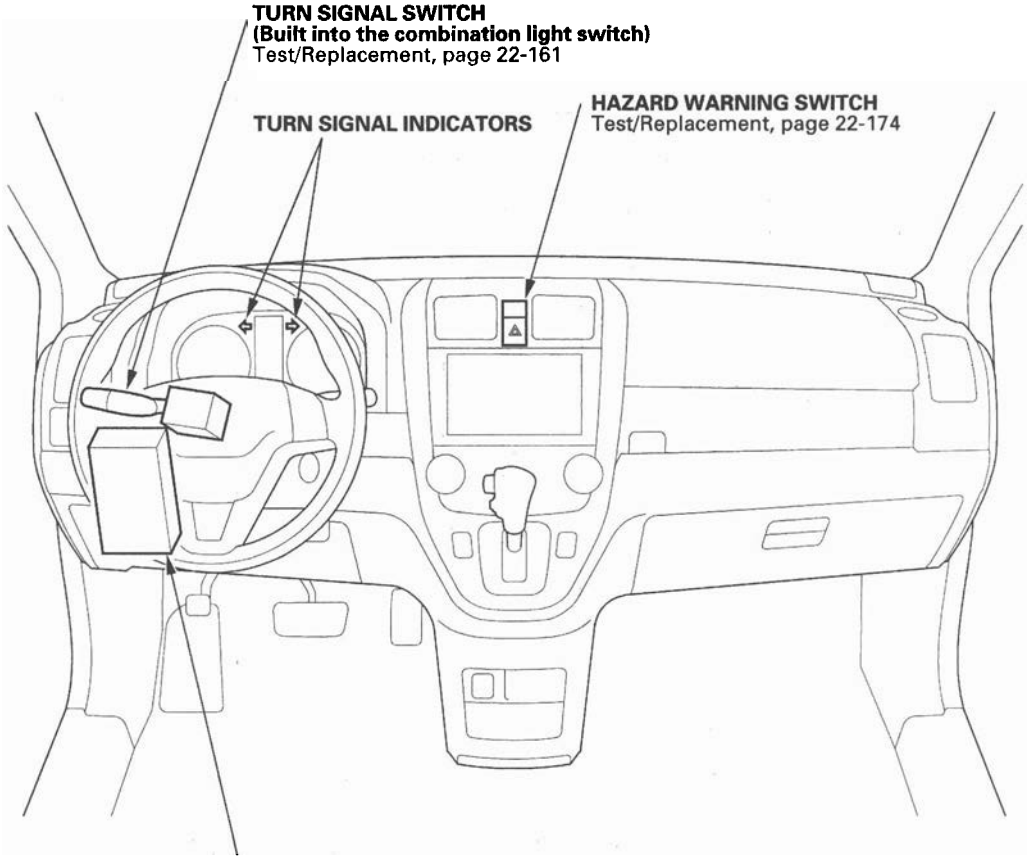

Turn Signal/Hazard Flasher

Circuit Diagram

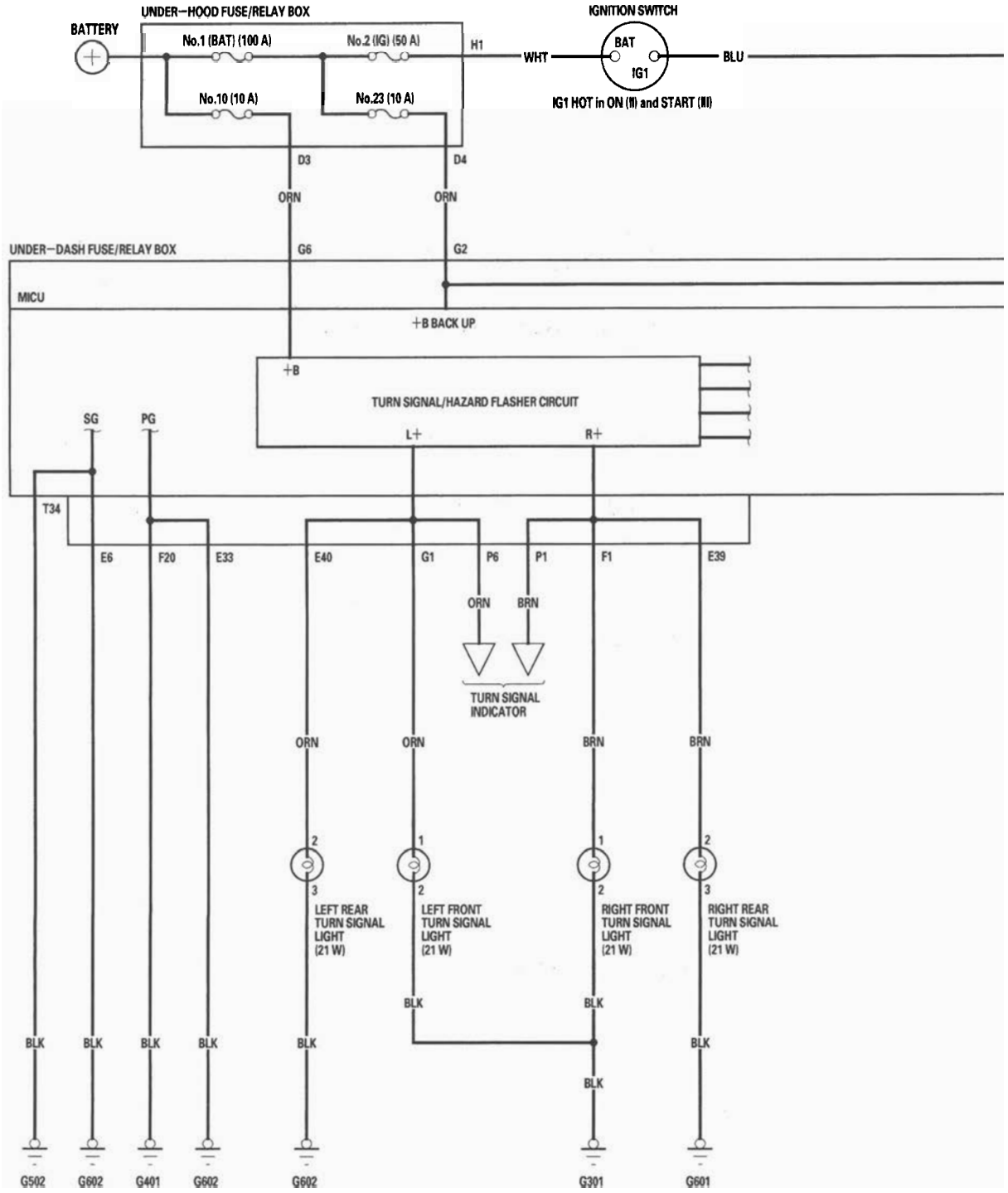

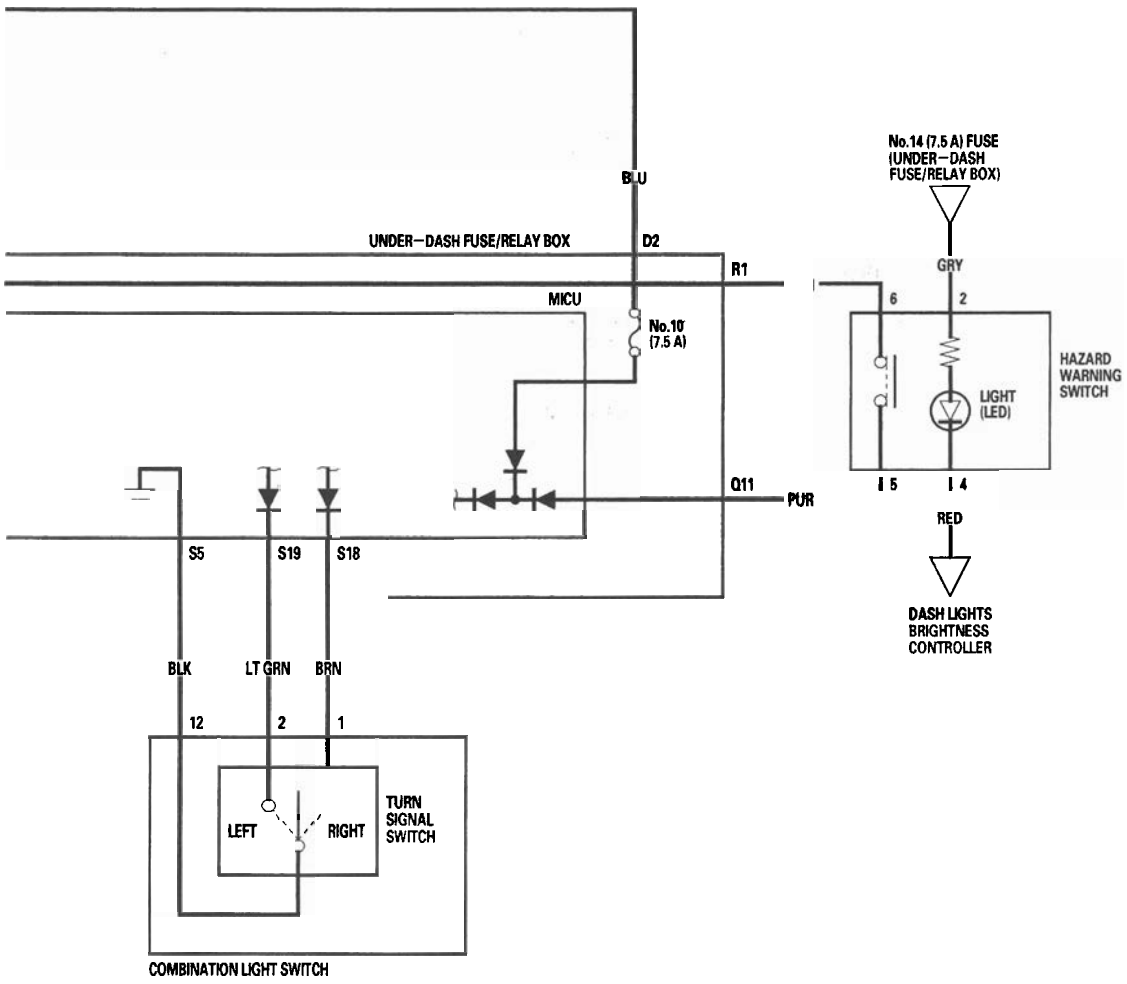
No.14 (7.5 A) FUSE
(UNDER–DASH
FUSE/RELAY BOX)
BLU
UNDER–DASH FUSE/RELAY BOX
D2
R1
GRY
6
2
MICU
No.10
(7.5 A)
HAZARD
WARNING
SWITCH
LIGHT
(LED)
Q11
PUR
5
4
RED
S5
S19
S18
DASH LIGHTS
BRIGHTNESS
CONTROLLER
BLK
LT GRN
BRN
12
2
1
TURN
SIGNAL
SWITCH
LEFT
RIGHT
COMBINATION LIGHT SWITCH

Turn Signal/Hazard Flasher

MICU Input Test

NOTE: Before testing, troubleshoot the B-CAN System Diagnosis Test Mode A (see page 22-92).

1. Check the No. 10 (7.5 A) fuse in the under-dash fuse/relay box. If the fuse is blown, replace it and go to step 2.
2. Disconnect the under-dash fuse/relay box connectors E, F, G, P, Q, R, S, and T.

   NOTE: All connector views are wire side of female terminals.

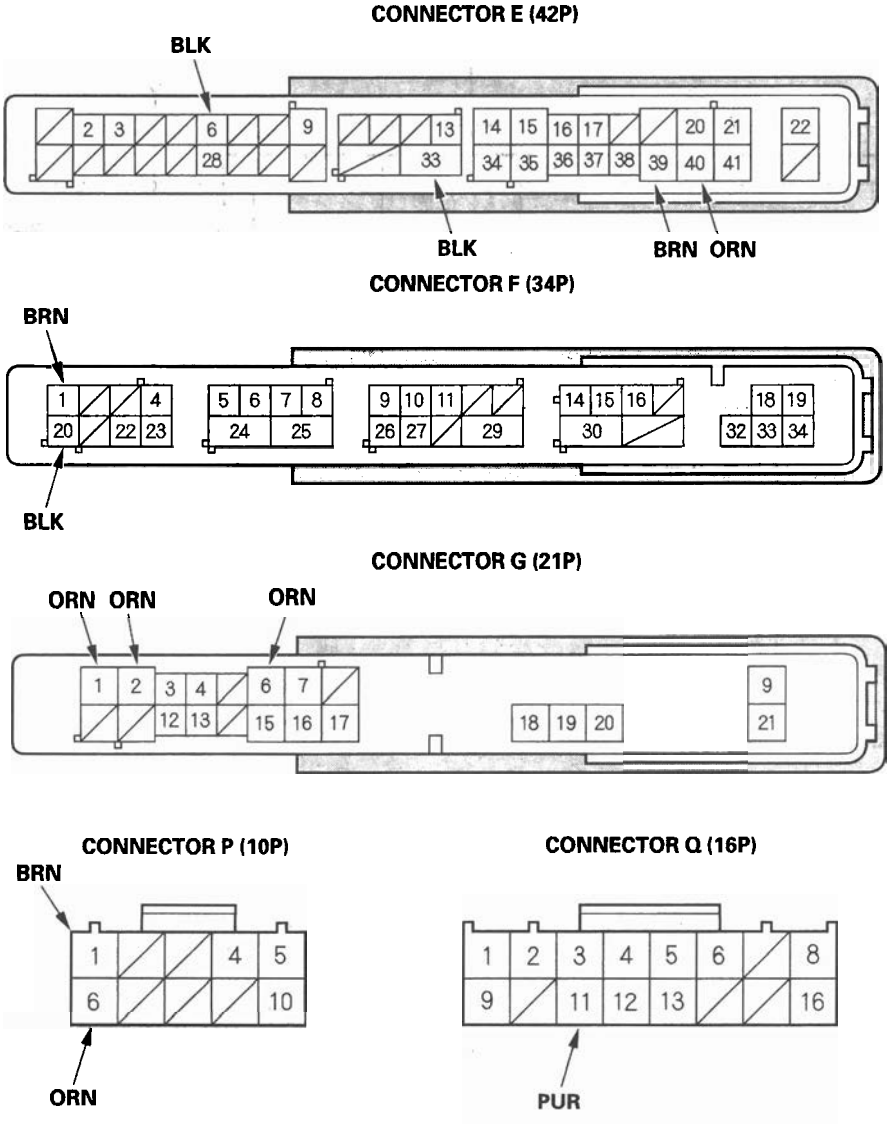

CONNECTOR R (20P)

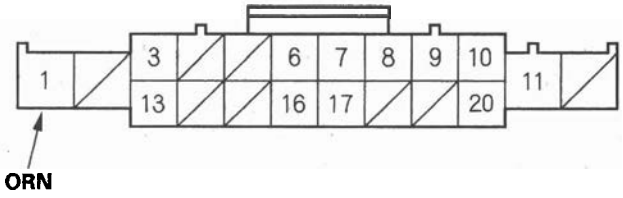

ORN

CONNECTOR S (20P)

BLK

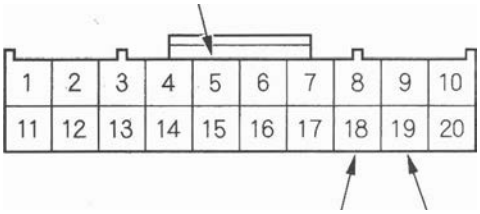

BRN LT GRN

CONNECTOR T (34P)

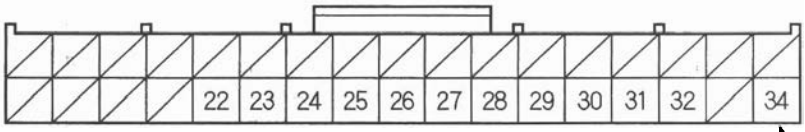

BLK

3. Inspect the connector and socket terminals to be sure they are all making good contact.

   - If the terminals are bent, loose or corroded, repair them as necessary and recheck the system.
   - If the terminals look OK, go to step 4.

(cont'd)

MICU Input Test (cont'd)

4. With the connectors still disconnected, make these input tests at the appropriate connector.

   - If any test indicates a problem, find and correct the cause, then recheck the system.
   - If all the input tests prove OK, go to step 5.

Cavity	Wire	Test condition	Test: Desired result	Possible cause if result is not obtained
G2	ORN	Under all conditions	Check for voltage between G2 terminal and body ground: There should be battery voltage.	• Blown No. 23 (10 A) fuse in the under-hood fuse/relay box • An open in the wire
G6	ORN	Under all conditions	Check for voltage between G6 terminal and body ground: There should be battery voltage.	• Blown No. 10 (10 A) fuse in the under-hood fuse/relay box An open in the wire
E39	BRN	Under all conditions	Connect G2 and E39 terminals with a jumper wire: The right rear turn signal light should come on.	Poor ground (G601) • Blown bulb • An open in the wire
E40	ORN	Under all conditions	Connect G2 and E40 terminals with a jumper wire: The left rear turn signal light should come on.	• Poor ground (G602) • Blown bulb • An open in the wire
F1	BRN	Under all conditions	Connect G2 and F1 terminals with a jumper wire: The right front turn signal light should come on.	• Poor ground (G301) • Blown bulb • An open in the wire
G1	ORN	Under all conditions	Connect G2 and G1 terminals with a jumper wire: The left front turn signal light should come on.	• Poor ground (G301) • Blown bulb • An open in the wire
P1	BRN	Under all conditions	Connect G2 and P1 terminals with a jumper wire: The right turn signal indicator should come on.	• Faulty gauge control module • Faulty indicator • An open in the wire
P6	ORN	Under all conditions	Connect G2 and P6 terminals with a jumper wire: The left turn signal indicator should come on.	• Faulty gauge control module • Faulty indicator • An open in the wire

5. Reconnect the connectors to the under-dash fuse/relay box, and make these input tests at the connectors.

   - If any test indicates a problem, find and correct the cause, then recheck the system.
   - If all the input tests prove OK, the MICU must be faulty; replace the under-dash fuse/relay box (see page 22-64).

Cavity	Wire	Test condition	Test: Desired result	Possible cause if result is not obtained
E6	BLK	Under all conditions	Check for voltage to ground: There should be less than 0.5 V.	• Poor ground (G602) • An open in the wire
E33	BLK	Under all conditions	Check for voltage to ground: There should be less than 0.5 V.	• Poor ground (G602) • An open in the wire
F20	BLK	Under all conditions	Check for voltage to ground: There should be less than 0.5 V.	• Poor ground (G401) • An open in the wire
T34	BLK	Under all conditions	Check for voltage to ground: There should be less than 0.5 V.	• Poor ground (G502) • An open in the wire
R1	ORN	Under all conditions	Check for voltage to ground: There should be battery voltage.	• Faulty under-dash fuse/relay box • A short to ground in the wire
Q11	PUR	Hazard warning switch pressed	Check for voltage to ground: There should be battery voltage.	• Faulty hazard warning switch • An open in the wire
S18 · S5	BRN · BLK	Turn signal switch in right position	Check for voltage between S18 and S5 terminals: There should be less than 1 V.	• Faulty combination light switch • An open in the wire
		Turn signal switch in left or neutral position	Check for voltage between S18 and S5 terminals: There should be 5 V or more.	• Faulty combination light switch • A short to ground in the wire
S19 · S5	LT GRN · BLK	Turn signal switch in left position	Check for voltage between S19 and S5 terminals: There should be less than 1 V.	• Faulty combination light switch • An open in the wire
		Turn signal switch in right or neutral position	Check for voltage between S19 and S5 terminals: There should be 5 V or more.	• Faulty combination light switch • A short to ground in the wire

Hazard Warning Switch Test/Replacement

1. Remove the center vent (see page 20-93).
2. Remove the hazard warning switch (A).

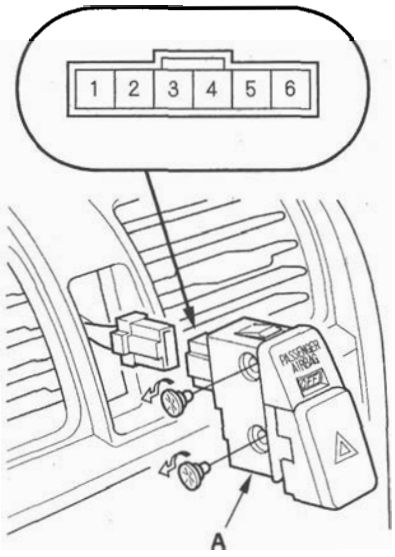

3. Check for continuity between the terminals in each switch position according to the table.

Position \ Terminal	5	6	3		4
OFF			○	○	○
ON	○	○	○	○	○

4. If the continuity is not as specified, replace the hazard warning switch.

Component Location Index

With moonroof

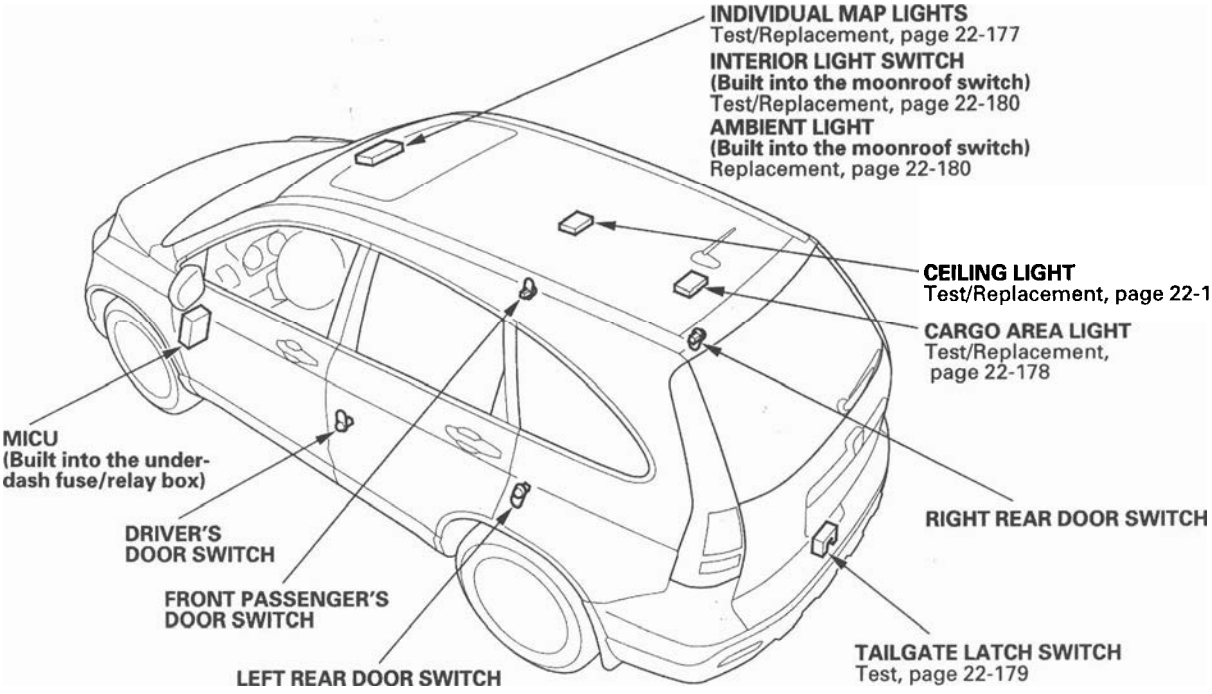

Without moonroof

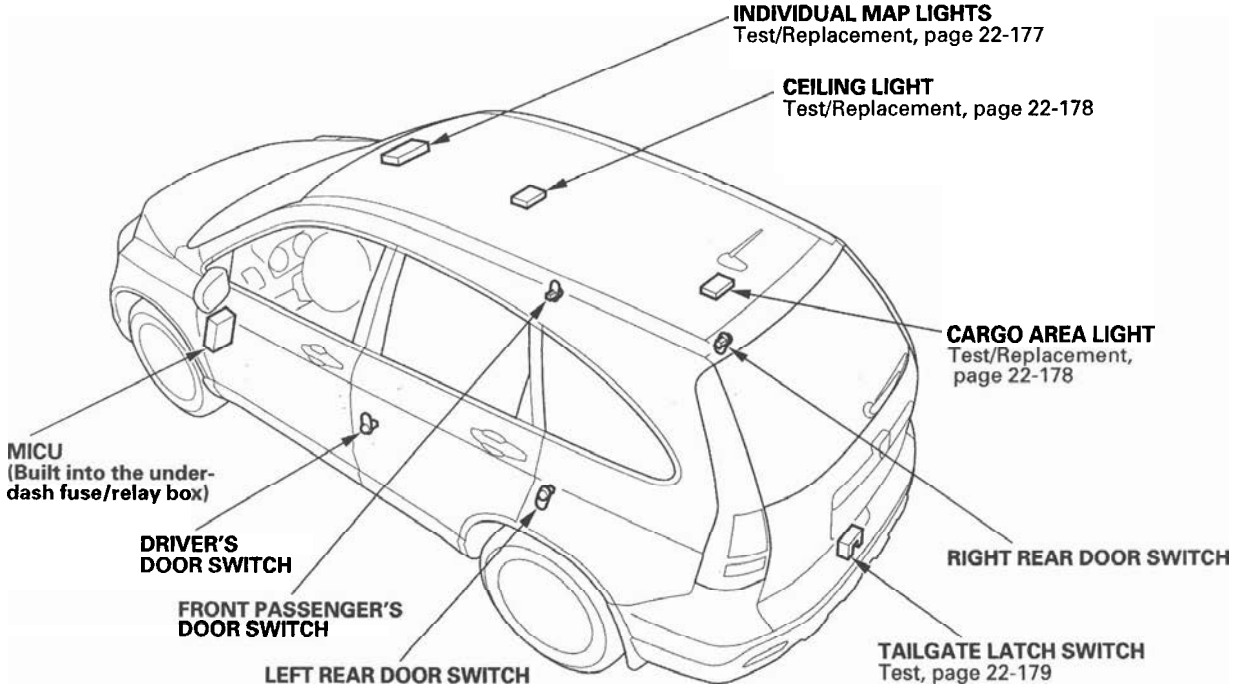

Interior Lights

Circuit Diagram

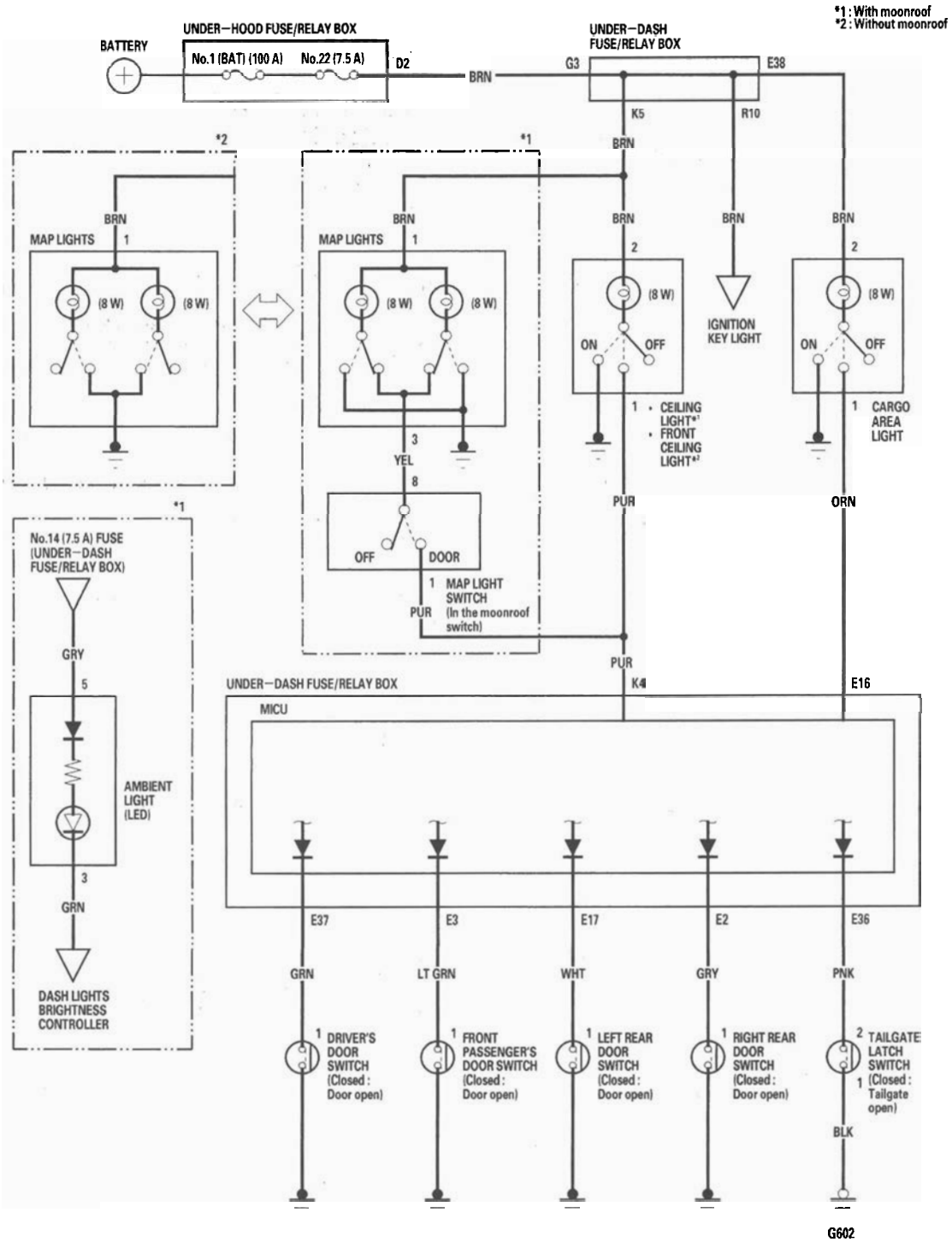

Front Individual Map Light Test/Replacement

With moonroof

1. Turn the map light switch OFF.
2. Carefully pry the lens (A) off with a small screwdriver.

Front Map Light: 8 W x 2

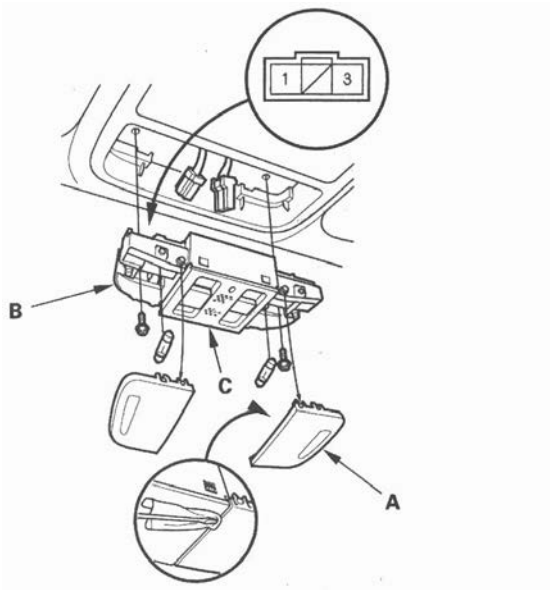

3. Remove the screws, then remove the map lights (B) and moonroof switch or navigation microphone (C).
4. Disconnect the 3P connector from the map lights and the 10P connector from the moonroof switch or navigation microphone.
5. Check for continuity between the terminals in each switch position according to the table.

Position \ Terminal		1		3	Body ground
RIGHT	ON	○	○		○
	OFF	○	○	○	
LEFT	ON	○	○		○
	OFF	○	○	○	

6. If the continuity is not as specified, check the bulb(s). If the bulb(s) are OK, replace the light assembly.
7. Install in the reverse order of removal.

Without moonroof

1. Turn the map light switch OFF.
2. Carefully pry the lens (A) off with a small screwdriver.

Front Map Light: 8 W x 2

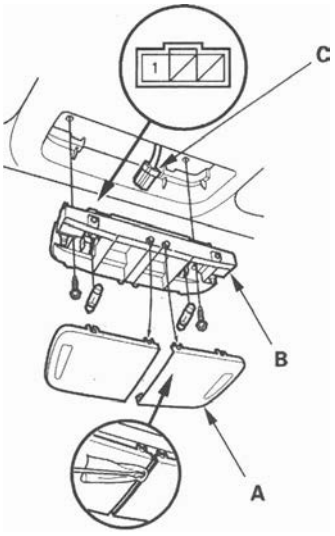

3. Remove the screws, then remove the map lights (B).
4. Disconnect the 3P connector (C) from the map lights.
5. Check for continuity between the terminals in each switch position according to the table.

Position \ Terminal		1		Body ground
RIGHT	ON	○	○	○
	OFF			
LEFT	ON	○	○	○
	OFF			

6. If the continuity is not as specified, check the bulb(s). If the bulb(s) are OK, replace the light assembly.
7. Install in the reverse order of removal.

Ceiling Light Test/Replacement

1. Turn the ceiling light switch OFF.
2. Carefully pry the lens (A) off with a small screwdriver.

Ceiling Light: 5 W

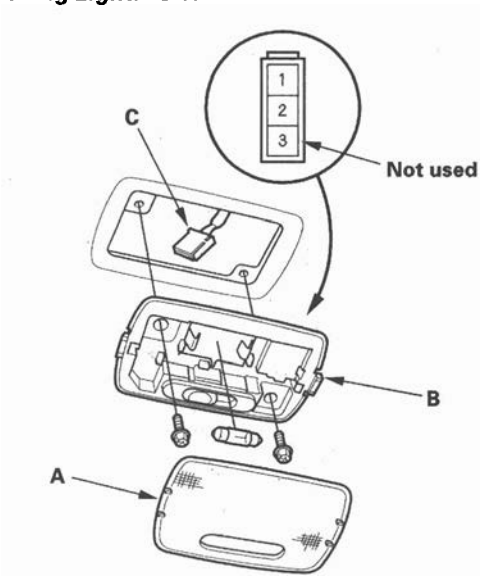

3. Remove the screws, then remove the ceiling light (B).
4. Disconnect the 3P connector (C) from the ceiling light.
5. Check for continuity between the terminals.
   - There should be continuity between the No. 1 and No. 2 terminals with the switch in the MIDDLE position.
   - There should be continuity between the No. 2 and No. 3 (Body ground) terminals with the switch in the ON position.
   - There should be no continuity between the No. 1 and No. 2 terminals, and between the No. 2 and body ground with the switch in the OFF position.
6. If the continuity is not as specified, check the bulb. If the bulb is OK, replace the light.
7. Install in the reverse order of removal.

Cargo Area Light Test/Replacement

1. Open the tailgate, and turn the cargo area light switch OFF.
2. Carefully pry the lens (A) off with a small screwdriver.

Cargo Area Light: 5 W

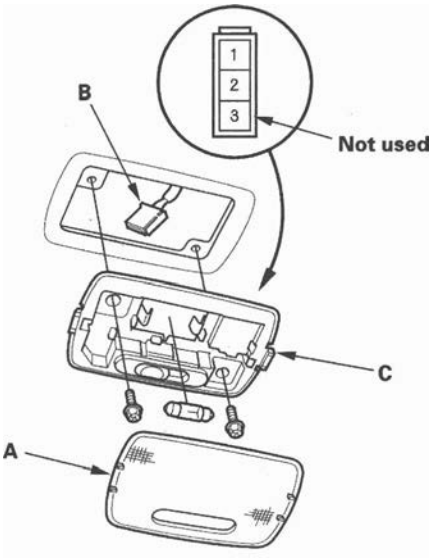

3. Remove the screws, then remove the cargo area light (B).
4. Disconnect the 3P connector (C) from the cargo area light.
5. Check for continuity between the terminals.
   - There should be continuity between the No. 1 and No. 2 terminals with the switch in the MIDDLE position.
   - There should be continuity between the No. 2 and No. 3 (Body ground) terminals with the switch in the ON position.
   - There should be no continuity between the No. 1 and No. 2 terminals, and between the No. 2 and body ground with the switch in the OFF position.
6. If the continuity is not as specified, check the bulb. If the bulb is OK, replace the light.
7. Install in the reverse order of removal.

Tailgate Latch Switch Test

1. Open the tailgate.
2. Remove the tailgate lower trim (see page 20-179).
3. Disconnect the 2P connector (A) from the tailgate latch switch (B).

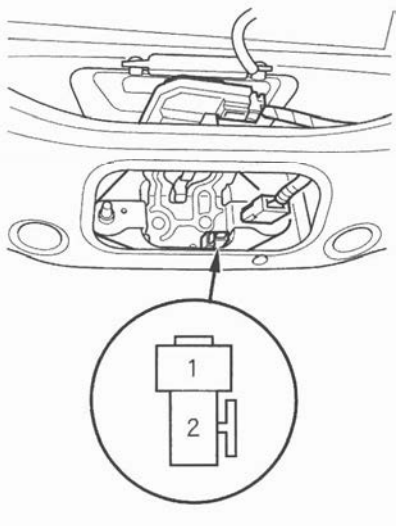

4. Check for continuity between the No. 1 and No. 2 terminals.
   - There should be continuity with the tailgate open.
   - There should be no continuity with the tailgate closed.
5. If the continuity is not as specified, replace the tailgate latch assembly.

Interior Light Switch Test/ Replacement

With moonroof

NOTE: The interior light switch is built into the moonroof switch, and it switches the front individual map lights between the OFF and DOOR positions.

1. Remove the front individual map lights (see page 22-177).
2. Disconnect the 10P connector (A) from the moonroof switch.

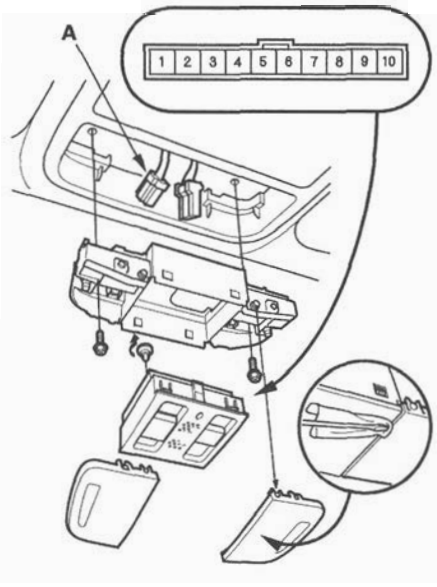

3. Check for continuity between the No. 1 and No. 8 terminals.
   - There should be continuity when the interior light switch is in the DOOR position.
   - There should be no continuity when the interior light switch is in the OFF position.
4. If the continuity is not as specified, replace the switch.
5. Install the switch and light in the reverse order of removal.

Ambient Light Test/Replacement

With moonroof

NOTE: The ambient light is built into the moonroof switch.

1. Remove the front individual map lights (see page 22-177).
2. Disconnect the 10P connector (A) from the moonroof switch.

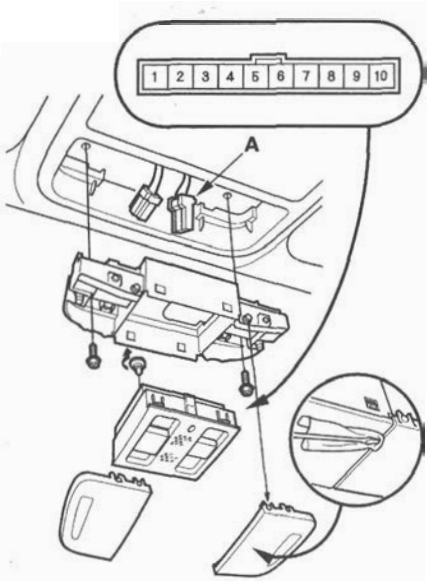

3. Connect the battery power to the No. 5 terminal and ground to the No. 3 terminal. The ambient light should turn on. If the light does not turn on, replace the moonroof switch as an assembly.
4. Install the switch and light in the reverse order of removal.

Entry Lights Control System

Component Location Index

With moonroof

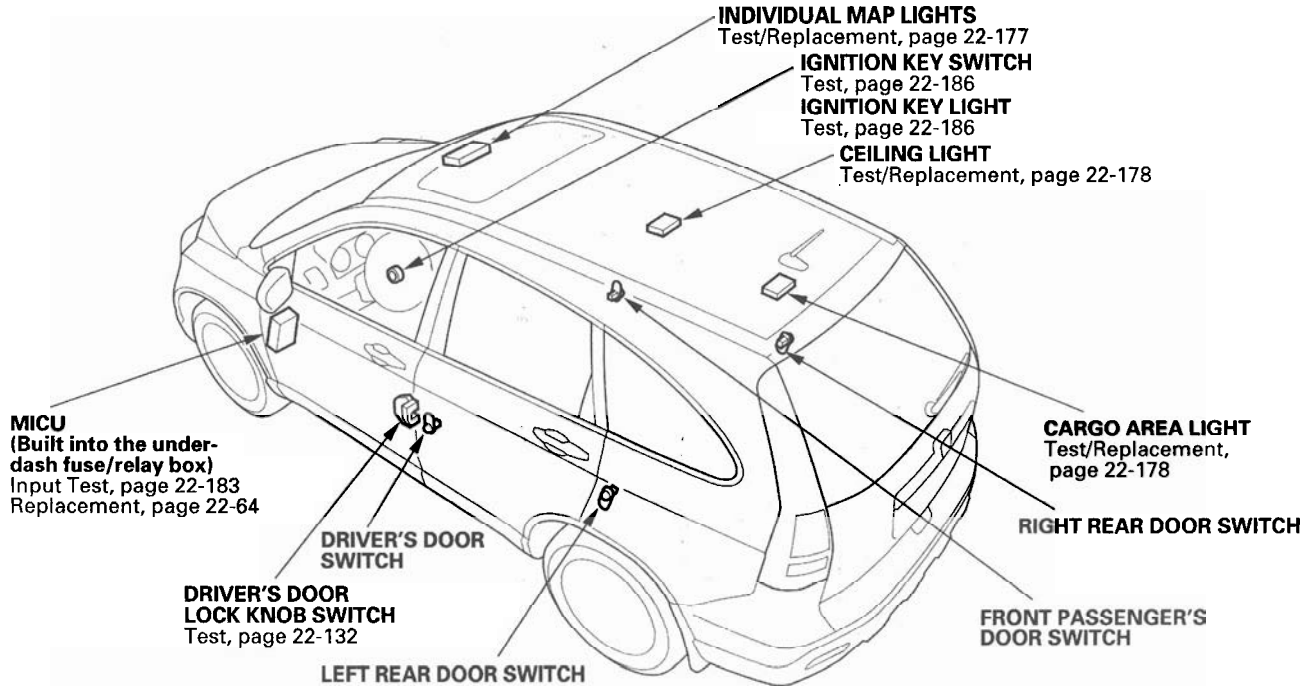

Without moonroof

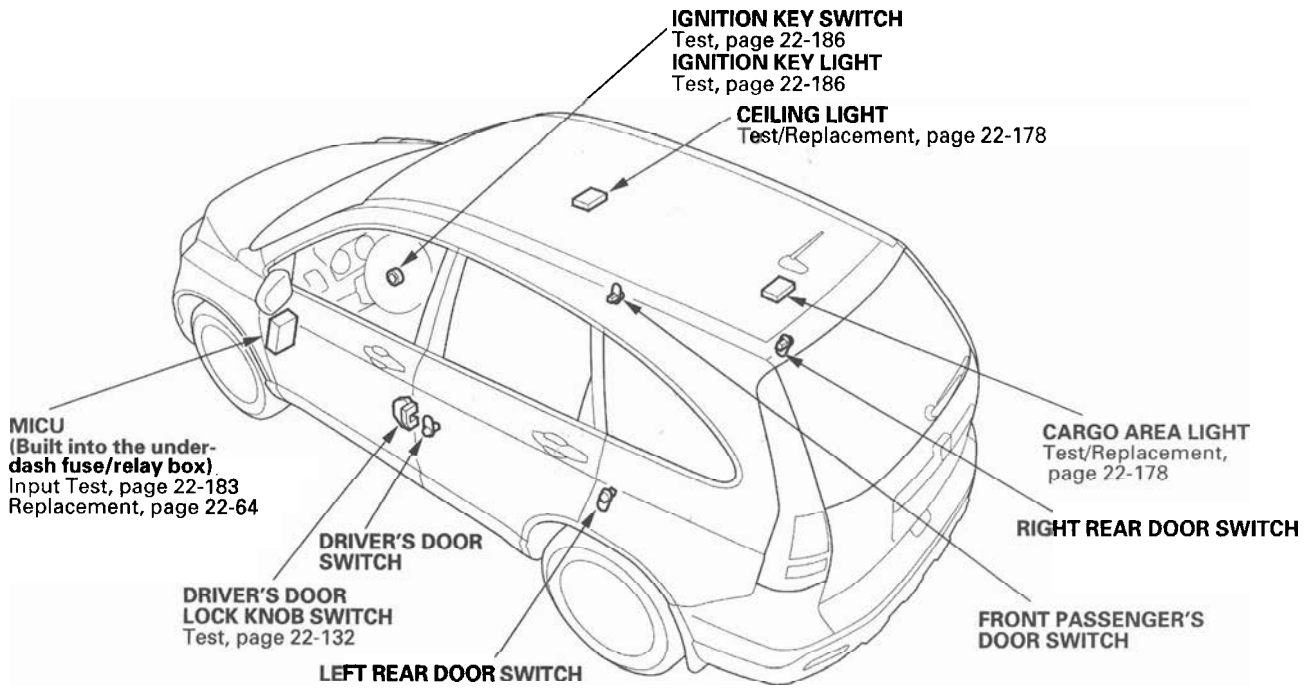

Entry Lights Control System

Circuit Diagram

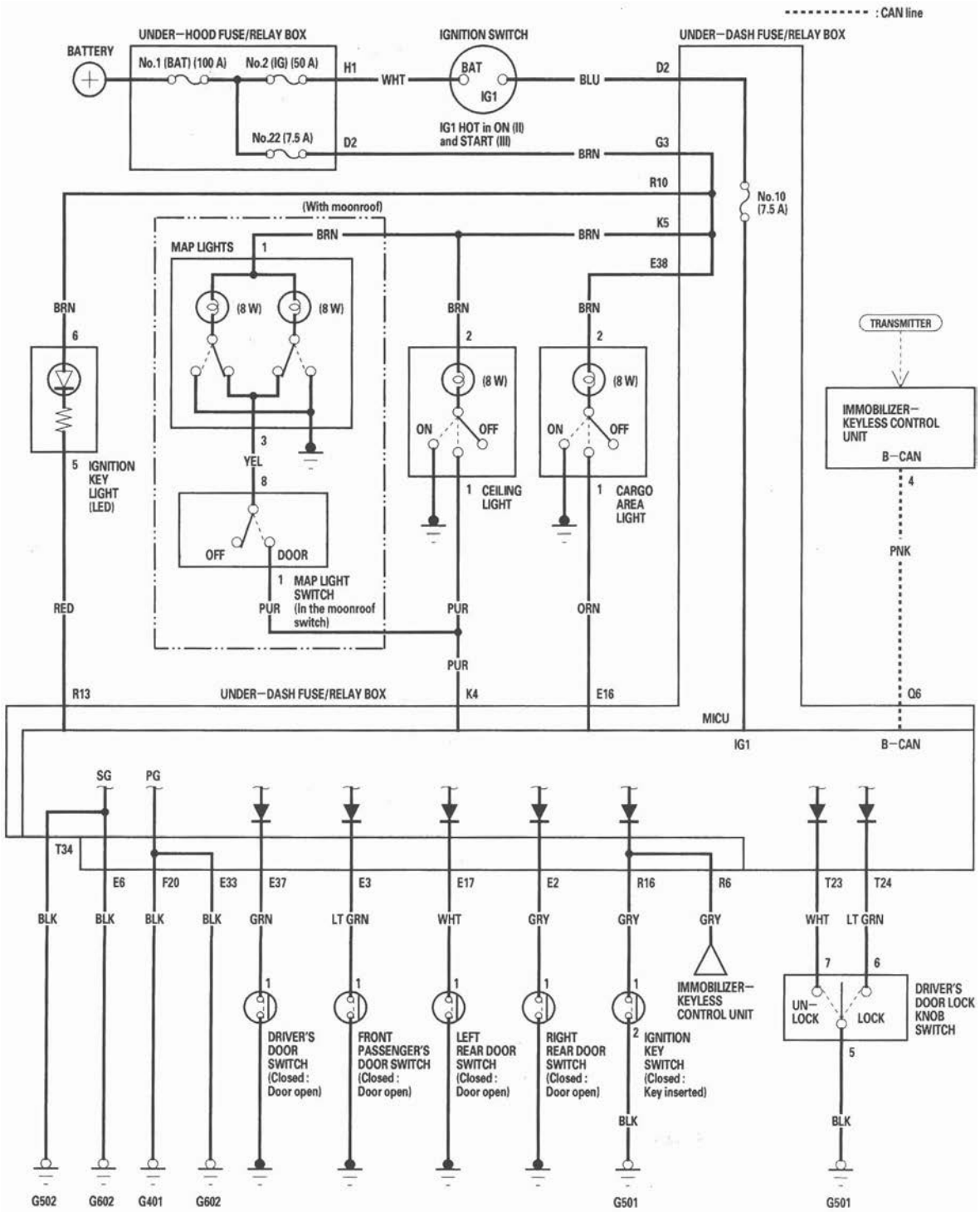

MICU Input Test

NOTE: Before testing, troubleshoot the B-CAN System Diagnosis Test Mode A (see page 22-92).

1. Check the No. 10 (7.5 A) fuse in the under-dash fuse/relay box. If the fuse is blown, replace it and go to step 2.
2. Disconnect the under-dash fuse/relay box connectors E, F, K, Q, R, and T.

   NOTE: All connector views are wire side of female terminals.

CONNECTOR E (42P)

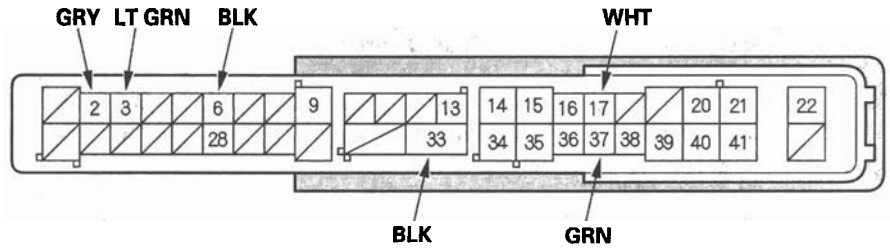

CONNECTOR F (34P)

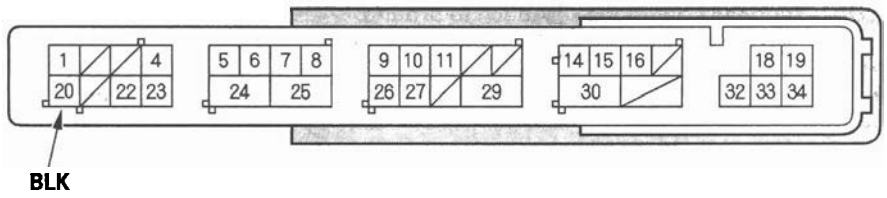

CONNECTOR K (8P)

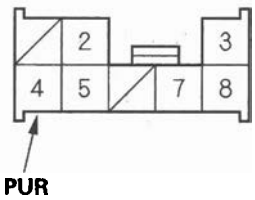

CONNECTOR R (20P)

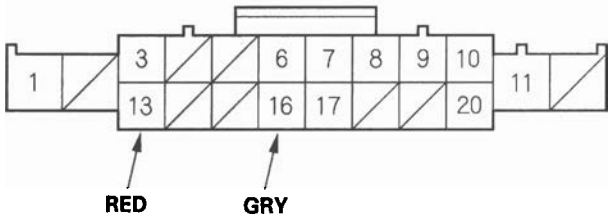

CONNECTOR T (34P)

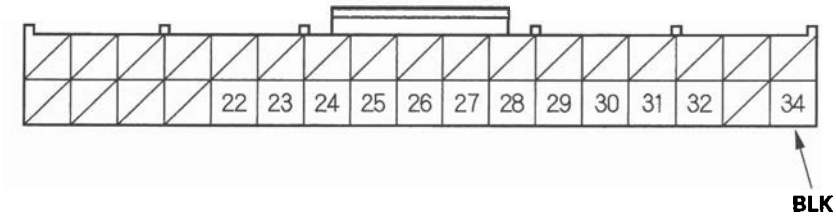

(cont'd)

MICU Input Test (cont'd)

3. Inspect the connector and socket terminals to be sure they are all making good contact.

   • If the terminals are bent, loose or corroded, repair them as necessary and recheck the system.
   • If the terminals look OK, go to step 4.

4. With the connectors still disconnected, do these input tests at the appropriate connector.

   • If any test indicates a problem, find and correct the cause, then recheck the system.
   • If all the input tests prove OK, go to step 5.

Cavity	Wire	Test condition	Test: Desired result	Possible cause if result is not obtained
K4	PUR	Under all conditions (With moonroof: select the interior light switch in DOOR position)	Attach to ground: The ceiling light and map lights* should come on.	• Blown No. 22 (7.5 A) fuse in the under-hood fuse/relay box • Blown bulb(s) Faulty ceiling light • Faulty map light* • Faulty interior light switch* • An open in the wire
R13	RED	Under all conditions	Attach to ground: The ignition key light should come on.	• Blown No. 22 (7.5 A) fuse in the under-hood fuse/relay box • Faulty ignition key light • An open in the wire

*: With moonroof

5. Reconnect the connectors to the under-dash fuse/relay box, and do these input tests at the connectors.

   • If any test indicates a problem, find and correct the cause, then recheck the system.
   • If all the input tests prove OK, the MICU must be faulty; replace the under-dash fuse/relay box (see page 22-64).

Cavity	Wire	Test condition	Test: Desired result	Possible cause if result is not obtained
E6	BLK	Under all conditions	Check for voltage to ground: There should be less than 0.5 V.	• Poor ground (G602) • An open in the wire
E33	BLK	Under all conditions	Check for voltage to ground: There should be less than 0.5 V.	• Poor ground (G602) • An open in the wire
F20	BLK	Under all conditions	Check for voltage to ground: There should be less than 0.5 V.	• Poor ground (G401) • An open in the wire
T34	BLK	Under all conditions	Check for voltage to ground: There should be less than 0.5 V.	• Poor ground (G502) • An open in the wire

Cavity	Wire	Test condition	Test: Desired result	Possible cause if result is not obtained
E37	GRN	Driver's door open	Check for voltage to ground: There should be less than 1 V.	• Faulty driver's door switch • An open in the wire
		Driver's door closed	Check for voltage to ground: There should be 5 V or more.	• Faulty driver's door switch • A short to ground in the wire
E3	LT GRN	Front passenger's door open	Check for voltage to ground: There should be less than 1 V.	• Faulty front passenger's door switch • An open in the wire
		Front passenger's door closed	Check for voltage to ground: There should be 5 V or more.	• Faulty front passenger's door switch • A short to ground in the wire
E2	GRY	Right rear door open	Check for voltage to ground: There should be less than 1 V.	• Faulty right rear door switch • An open in the wire
		Right rear door closed	Check for voltage to ground: There should be 5 V or more.	• Faulty right rear door switch • A short to ground in the wire
E17	WHT	Left rear door open	Check for voltage to ground: There should be less than 1 V.	• Faulty left rear door switch • An open in the wire
		Left rear door closed	Check for voltage to ground: There should be 5 V or more.	• Faulty left rear door switch • A short to ground in the wire
R16	GRY	Ignition key inserted into the ignition switch	Check for voltage to ground: There should be less than 1 V.	• Poor ground (G501) • Faulty ignition key switch • An open in the wire
		Ignition switch OFF and ignition key removed from the ignition switch	Check for voltage to ground: There should be 5 V or more.	• Faulty ignition key switch • A short to ground in the wire
T23	WHT	Driver's door lock knob switch unlocked	Check for voltage to ground: There should be less than 1 V.	• Poor ground (G501) • Faulty driver's door lock knob switch • An open in the wire
		Driver's door lock knob switch locked	Check for voltage to ground: There should be 5 V or more.	• Faulty driver's door lock knob switch • A short to ground in the wire
T24	LT GRN	Driver's door lock knob switch unlocked	Check for voltage to ground: There should be 5 V or more.	• Faulty driver's door lock knob switch • A short to ground in the wire
		Driver's door lock knob switch locked	Check for voltage to ground: There should be less than 1 V.	Poor ground (G501) • Faulty driver's door lock knob switch • An open in the wire

Ignition Key Switch Test

1. Remove the steering column upper and lower covers (see page 17-25).
2. Disconnect the 6P connector (A).

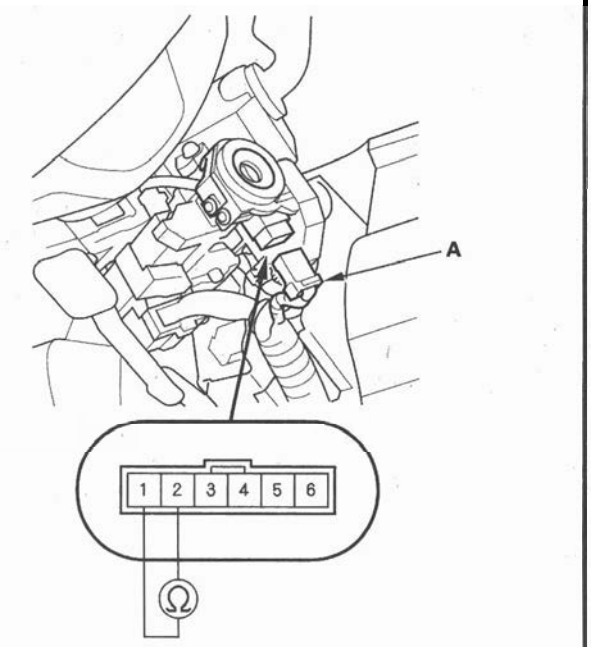

3. Check for continuity between the No. 1 and No. 2 terminals.
   - There should be continuity with the key in the ignition switch.
   - There should be no continuity with the key removed.
4. If the continuity is not as specified, replace the ignition switch.

Ignition Key Light Test

1. Remove the steering column upper and lower covers (see page 17-25).
2. Disconnect the 6P connector (A).

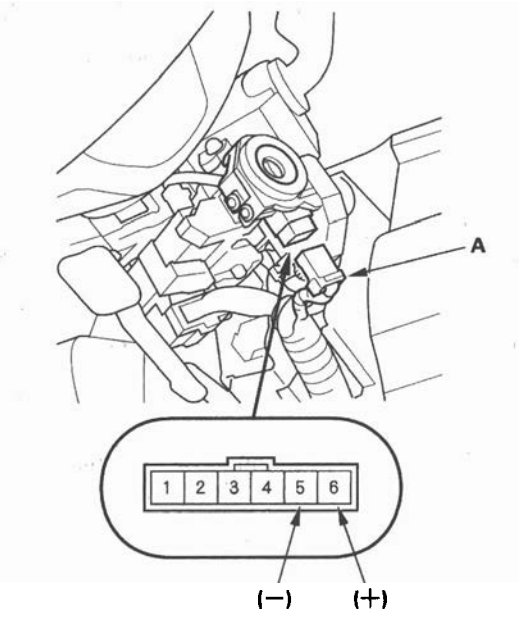

3. The LED should come on when power is connected to the No. 6 terminal and ground is connected to No. 5 terminal.
4. If the LED does not come on, replace the ignition switch.

Component Location Index

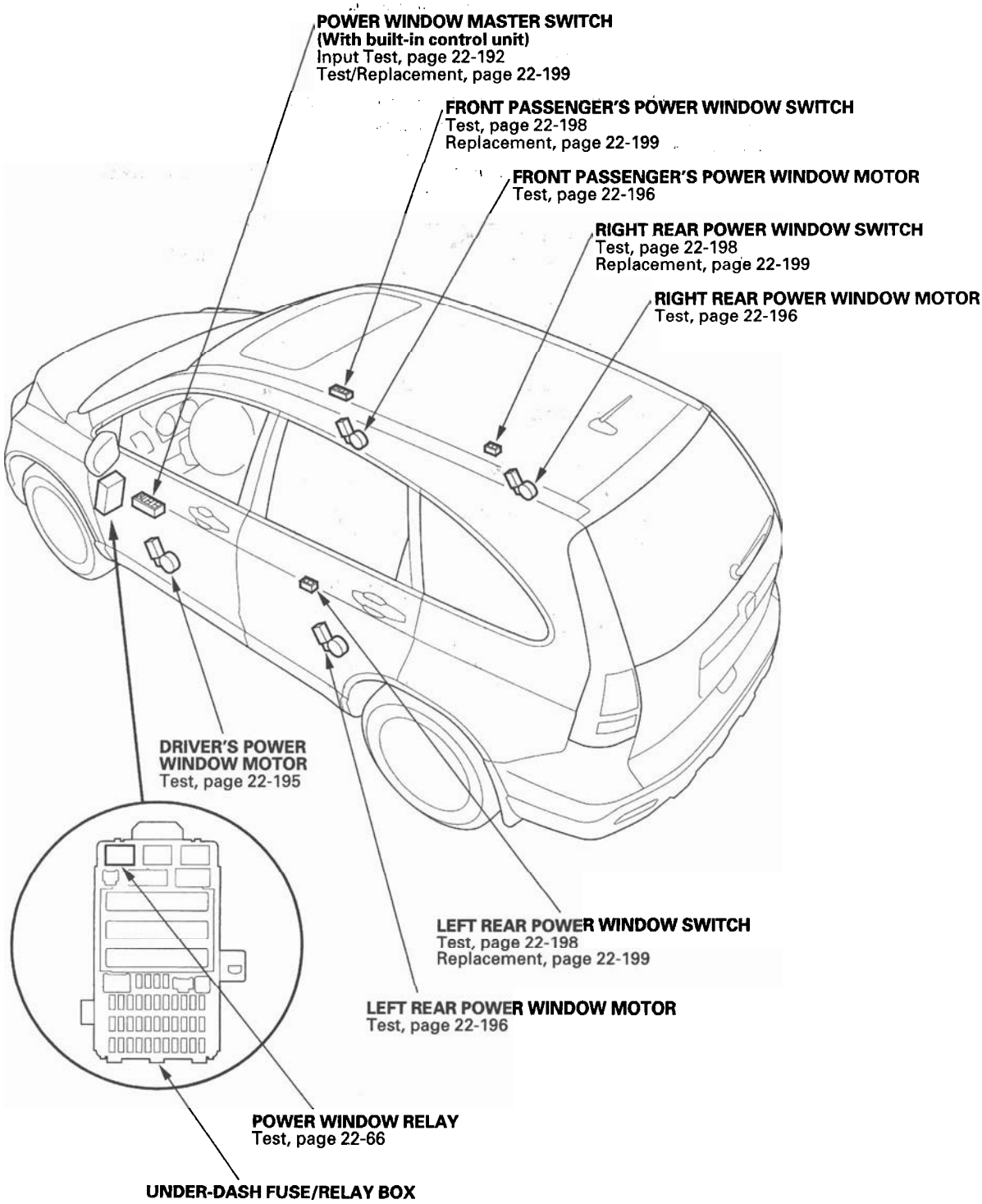

System Description

Auto Reverse Operation

The system is composed of the power window master switch and the driver's power window motor.

The driver's power window motor incorporates a pulser which generates pulses during the motor's operation and sends the pulses to the driver's power window control unit. As soon as the power window control unit detects no pulses from the pulser (the window stops short of full travel), the driver's power window control unit makes the power window motor stop and reverse. If the window is more than halfway closed, it will reverse to half open position. If the window is less than halfway closed, it will stop and reverse about 2 inches. This is to prevent pinching an obstacle during auto-up operation. The auto reverse operation is not active when the switch is held in the up position.

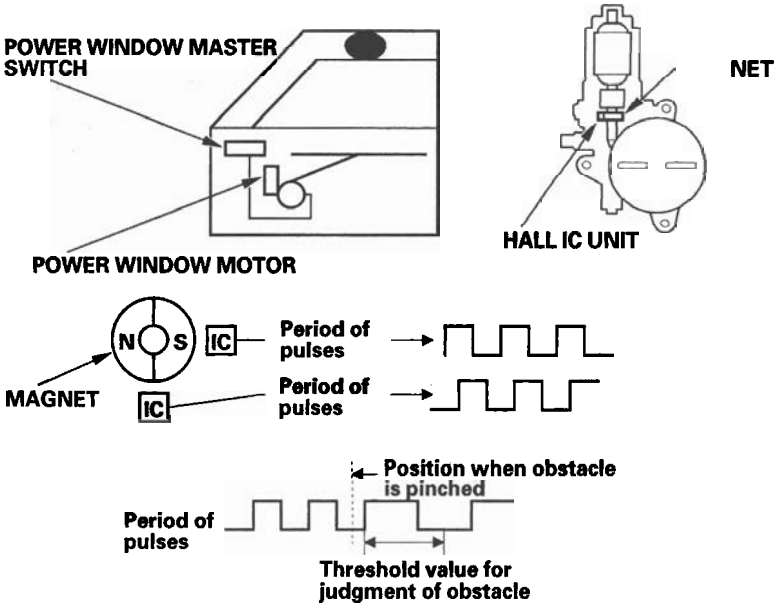

Resetting the Power Window Control Unit

Resetting the driver's power window is required when any of the following have occurred:

- Power window regulator replacement or repair
- Power window motor replacement or repair
- Window run channel replacement or repair
- Driver's door glass replacement or repair
- Power is removed from the power window control unit while the power window timer is ON.
- Power window master switch replacement

1. Turn the ignition switch ON (II).
2. Move the driver's window all the way down by using the driver's window DOWN switch.
3. Open the driver's door.

   NOTE: Steps 4—7 must be done within 5 seconds of each other.

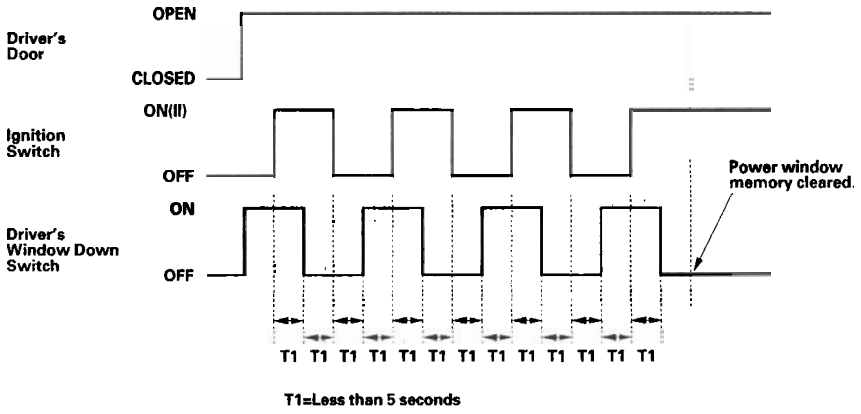

4. Turn the ignition switch OFF.
5. Push and hold the driver's window DOWN switch.
6. Turn the ignition switch ON (II).
7. Release the driver's window DOWN switch.
8. Repeat step 4—7 three more times.
9. Wait for at least 1 second.
10. Check if the AUTO UP and AUTO DOWN functions still work. If they do, go back to step 1 (the AUTO function has not been cleared; repeat the clear procedure again). If they do not, go to step 11.
11. Move the driver's window all the way down by using the driver's window DOWN switch.
12. Pull up and hold the driver's window UP switch until the window reaches the fully closed position, then continue to hold the switch for 1 second.
13. Confirm that the power window control unit is reset by using the driver's window AUTO UP and AUTO DOWN functions.

    If the window still does not work in AUTO, repeat the procedure several times, paying close attention to the 5 second time limit between steps. If it still does not work, refer to the master switch input test (see page 22-192).

Power Windows

Circuit Diagram

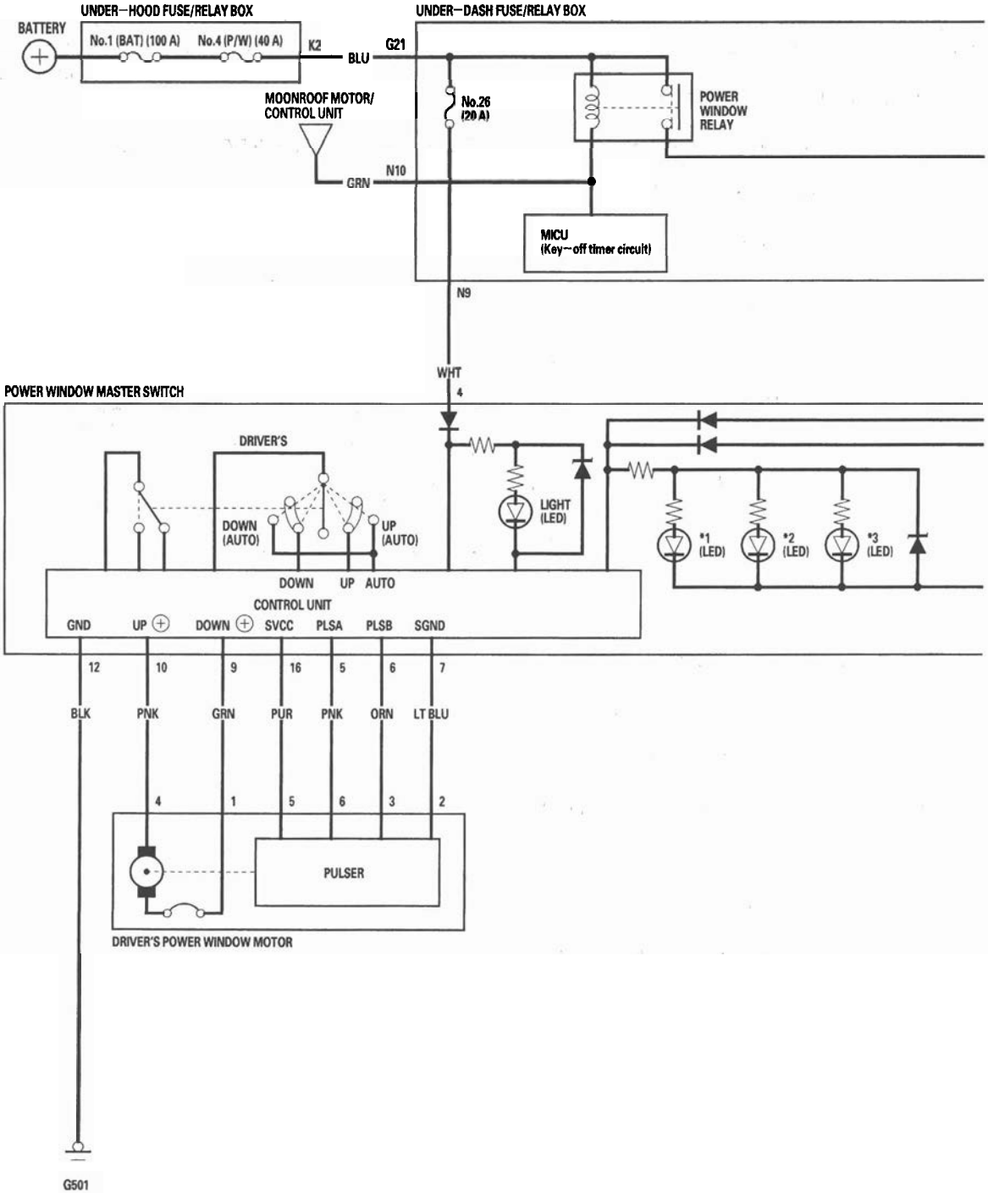

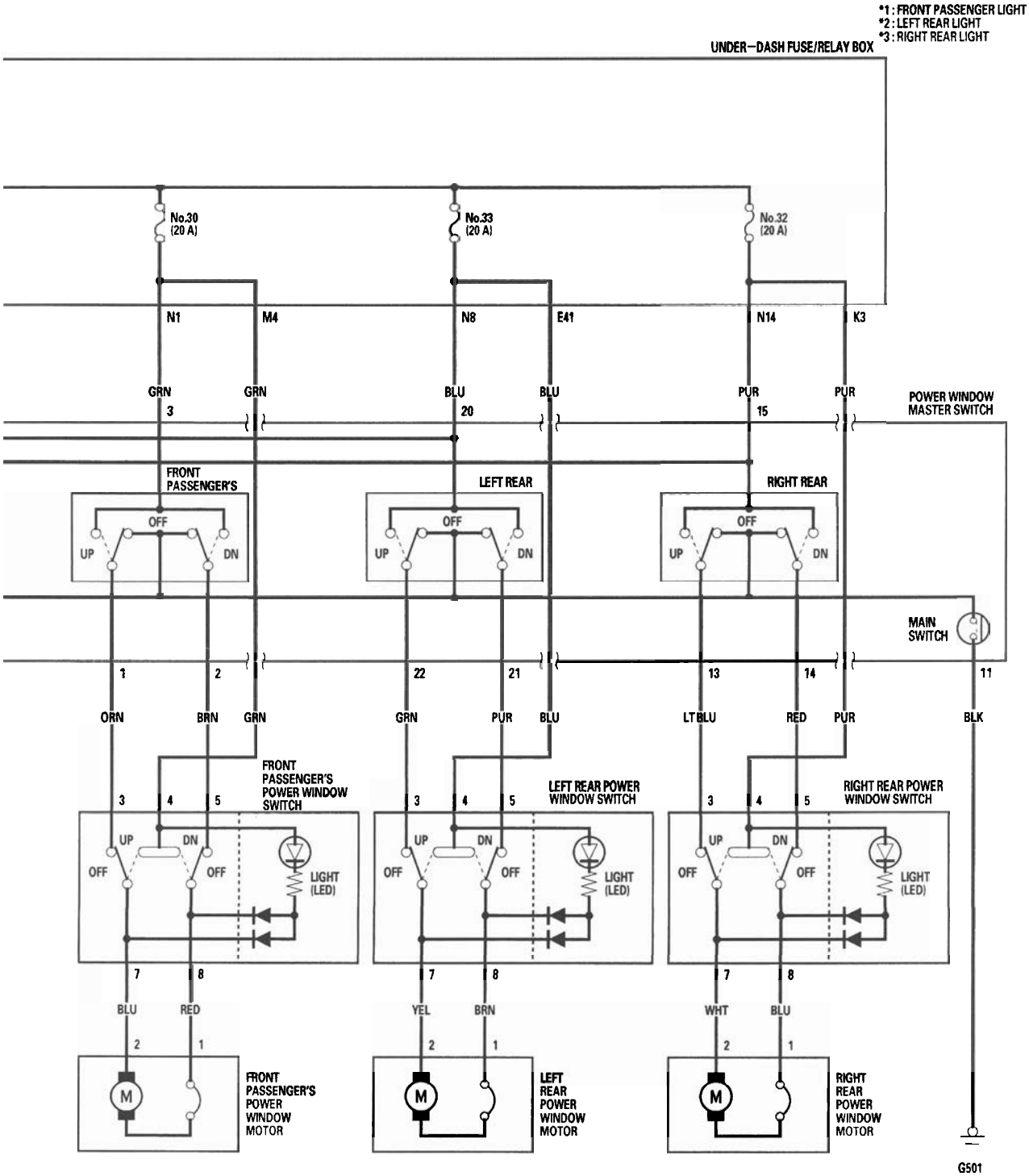
*1 : FRONT PASSENGER LIGHT
*2 : LEFT REAR LIGHT
*3 : RIGHT REAR LIGHT
UNDER–DASH FUSE/RELAY BOX
No.30 (20 A)
No.33 (20 A)
No.32 (20 A)
N1
M4
N8
E41
N14
K3
GRN
GRN
BLU
BLU
PUR
PUR
3
20
15
POWER WINDOW MASTER SWITCH
FRONT PASSENGER'S
LEFT REAR
RIGHT REAR
OFF
UP
DN
MAIN SWITCH
1
2
22
21
13
14
11
ORN
BRN
GRN
GRN
PUR
BLU
LT BLU
RED
PUR
BLK
FRONT PASSENGER'S POWER WINDOW SWITCH
LEFT REAR POWER WINDOW SWITCH
RIGHT REAR POWER WINDOW SWITCH
3
4
5
LIGHT (LED)
7
8
BLU
RED
YEL
BRN
WHT
BLU
2
1
M
FRONT PASSENGER'S POWER WINDOW MOTOR
LEFT REAR POWER WINDOW MOTOR
RIGHT REAR POWER WINDOW MOTOR
G501

Master Switch Input Test

NOTE: The power window control unit is built into the power window master switch.

1. Remove the power window switch panel (see page 20-6).
2. Disconnect the 22P connector (A) from the master switch (B).

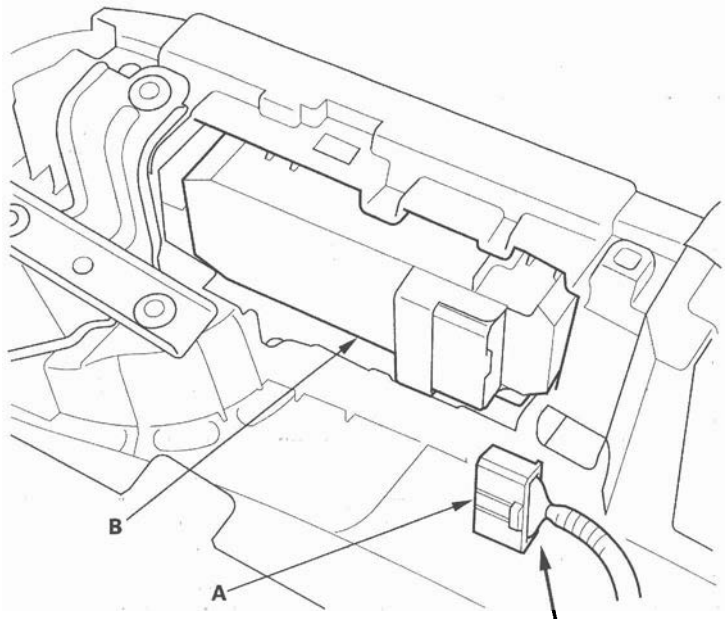

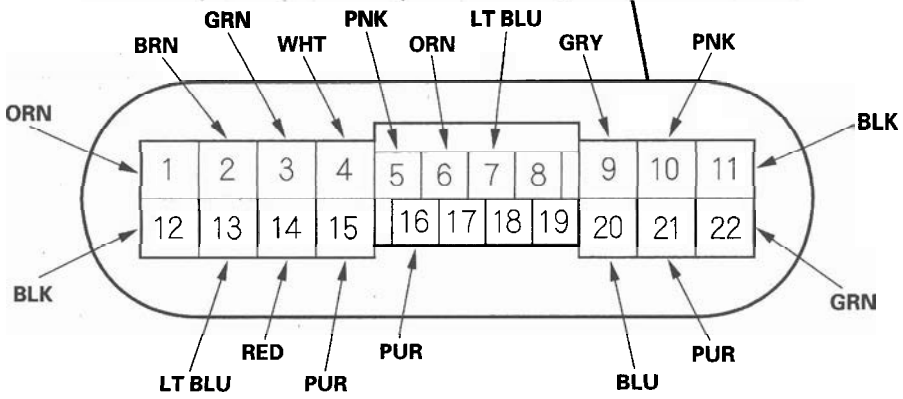

Wire side of female terminals

3. Inspect the connector and socket terminals to be sure they are all making good contact.
   - If the terminals are bent, loose or corroded, repair them as necessary, and recheck the system.
   - If the terminals look OK, go to step 4.

4. With the connector still disconnected, do these input tests at the connector.

   - If any test indicates a problem, find and correct the cause, then recheck the system.
   - If all the input tests prove OK, go to step 5.

Cavity	Wire	Test condition	Test: Desired result	Possible cause if result is not obtained
9	GRN	Connect the No. 4 and the No. 9 terminals and No. 10 and No. 12 terminals momentarily with jumper wires	Check driver's power window motor operation: The window should go down.	• Faulty driver's power window motor • An open in the wire
10	PNK	Connect the No. 4 and the No. 10 terminals and No. 9 and No. 12 terminals momentarily with jumper wires	Check driver's window motor operation: The window should go up.	
1	ORN	Connect the No. 3 and the No. 2 terminals and No. 1 and No. 12 terminals momentarily with jumper wires	Check front passenger's power window motor operation: The window should go down.	• Faulty front passenger's power window motor • Faulty front passenger's power window switch • An open in the wire
2	BRN	Connect the No. 3 and the No. 1 terminals and No. 2 and No. 12 terminals momentarily with jumper wires	Check front passenger's power window motor operation: The window should go up.	
13	LT BLU	Connect the No. 15 and the No. 14 terminals and No. 13 and No. 12 terminals momentarily with jumper wires	Check right rear power window motor operation: The window should go down.	• Faulty right rear power window motor • Faulty right rear power window switch • An open in the wire
14	RED	Connect the No. 15 and the No. 13 terminals and No. 14 and No. 12 terminals momentarily with jumper wires	Check right rear power window motor operation: The window should go up.	
21	PUR	Connect the No. 20 and the No. 21 terminals and No. 22 and No. 12 terminals momentarily with jumper wires	Check left rear power window motor operation: The window should go down.	• Faulty left rear power window motor • Faulty left rear power window switch • An open in the wire
22	GRN	Connect the No. 20 and the No. 22 terminals and No. 21 and No. 12 terminals momentarily with jumper wires	Check left rear power window motor operation: The window should go up.	

(cont'd)

Master Switch Input Test (cont'd)

5. Reconnect the 22P connector to the power window master switch, and do these input tests at the connector.

   - If any test indicates a problem, find and correct the cause, then recheck the system.
   - If all the input tests prove OK, the control unit must be faulty; replace the power window master switch, and go to step 6.

Cavity	Wire	Test condition	Test: Desired result	Possible cause if result is not obtained
3	GRN	Ignition switch ON (II)	Check for voltage to ground: There should be battery voltage.	Blown No. 30 (20 A) fuse in the under-dash fuse/relay box • Faulty power window relay Faulty MICU • An open in the wire
4	WHT	Under all conditions	Check for voltage to ground: There should be battery voltage.	• Blown No. 26 (20 A) fuse in the under-dash fuse/relay box • An open in the wire
15	PUR	Ignition switch ON (II)	Check for voltage to ground: There should be battery voltage.	• Blown No. 32 (20 A) fuse in the under-dash fuse/relay box • Faulty power window relay • Faulty MICU • An open in the wire
20	BLU	Ignition switch ON (II)	Check for voltage to ground: There should be battery voltage.	• Blown No. 33 (20 A) fuse in the under-dash fuse/relay box • Faulty power window relay • Faulty MICU • An open in the wire
7	LT BLU	Under all conditions	Check for voltage to ground: There should be less than 0.5 V.	• Poor ground (G501) • An open in the wire
11	BLK	Ignition switch ON (II), and driver's window moving up and down	Check for voltage to ground: There should be less than 0.5 V.	• Poor ground (G501) • An open in the wire
12	BLK	Ignition switch ON (II), main switch ON, and passenger's window moving up and down	Check for voltage to ground: There should be less than 0.5 V.	• Poor ground (G501) • An open in the wire
16	PUR	Ignition switch ON (II)	Check for voltage to ground: There should be battery voltage.	• Faulty power window master switch • A short to ground in the wire
5	PNK	Ignition switch ON (II), and driver's window switch moving up or down	Check for voltage between the No. 5 and No. 7 terminals: There should be 0 V—about 5 V—0 V— about 5 V repeatedly (a digital voltmeter should reads about 2.5 V while the window moves).	• Faulty power window master switch • Faulty driver's power window motor • An open in the wire • A short to ground in the wire
6	ORN	Ignition switch ON (II), and driver's window switch moving up or down	Check for voltage between the No. 6 and No. 7 terminals: There should be 0 V—about 5 V—0 V— about 5 V repeatedly (a digital voltmeter should reads about 2.5 V while the window moves).	

6. Reset the power window control unit (see page 22-189).

Driver's Power Window Motor Test

Motor Test

1. Remove the door panel (see page 20-6), and disconnect the connectors.

2. Test the motor in each direction by connecting battery power and ground to the power window master switch 22P connector according to the table.

Direction \ Terminal	9	10
UP	⊖	⊕
DOWN	⊕	⊖

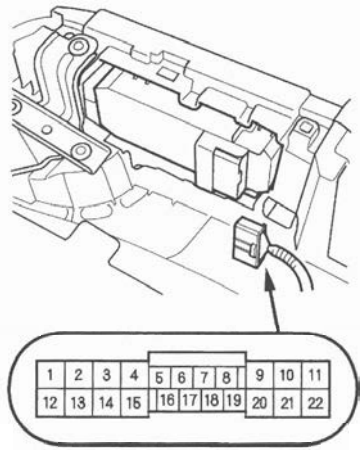

Wire side of female terminals

3. If the motor does not run or fails to run smoothly, go to step 4.

4. Disconnect the 6P connector from the driver's power window motor.

5. Check for continuity between the power window master switch 22P connector No. 9 and No. 10 terminals and the driver's power window motor 6P connector No. 1 and No. 4 terminals, respectively.

POWER WINDOW MASTER SWITCH 22P CONNECTOR	DRIVER'S POWER WINDOW MOTOR 6P CONNECTOR
No. 9 terminal	No. 1 terminal
No. 10 terminal	No. 4 terminal

POWER WINDOW MASTER SWITCH 22P CONNECTOR
Wire side of female terminals

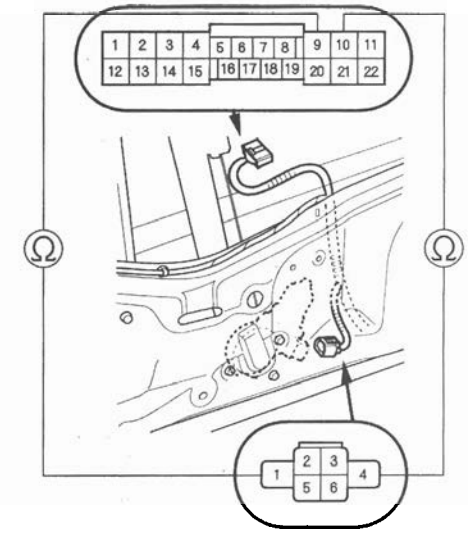

DRIVER'S POWER WINDOW MOTOR 6P CONNECTOR
Wire side of female terminals

6. If the wire harness is OK, replace the driver's power window motor.

Pulser Test (With AUTO UP/AUTO DOWN)

7. Do the power window master switch input test No. 5, No. 6, No. 7, and No. 16 terminals (see page 22-192).

Passenger's Power Window Motor Test

1. Remove the door panel (see page 20-6), and disconnect the connectors.

2. Test the motor in each direction by connecting battery power and ground to the passenger's power window switch 8P connector according to the table.

Direction \ Terminal	7	8
UP	⊕	⊖
DOWN	⊖	⊕

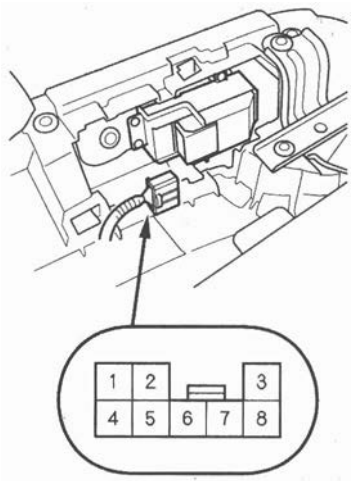

Wire side of female terminals

3. If the motor does not run or fails to run smoothly, go to step 4.

4. Disconnect the 6P connector (A) from the passenger's power window motor (B).

5. Check for continuity between the passenger's power window switch 8P connector No. 7 and No. 8 terminals and the passenger's power window motor 2P connector No. 1 and No. 2 terminals.

PASSENGER'S POWER WINDOW SWITCH 8P CONNECTOR	PASSENGER'S POWER WINDOW MOTOR 2P CONNECTOR
No. 7 terminal	No. 2 terminal
No. 8 terminal	No. 1 terminal

PASSENGER'S POWER WINDOW SWITCH 8P CONNECTOR

Wire side of female terminals

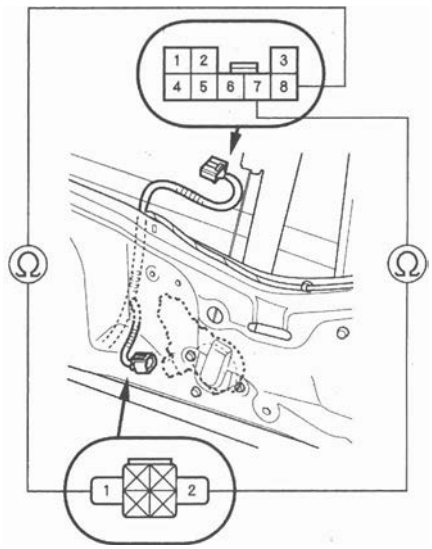

PASSENGER'S POWER WINDOW MOTOR 2P CONNECTOR

Wire side of female terminals

6. If the wire harness is OK, replace the appropriate power window motor.

Master Switch Test

1. Remove the driver's door panel (see page 20-6).

2. Disconnect the 22P connector (A) from the power window master switch (B).

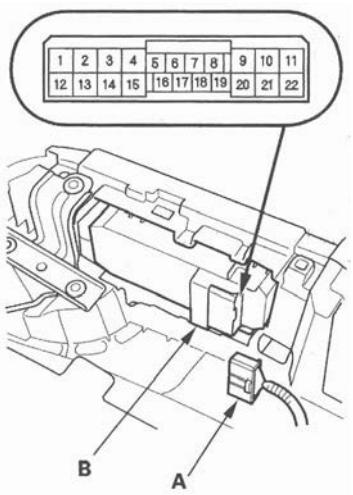

3. Check for continuity between the terminals in each switch position according to the tables.

Driver's Switch

The driver's switch is combined with the control unit, so you cannot isolate the switch to test it. Instead, run the master switch input test procedures (see page 22-192). If the tests are normal, the driver's switch is faulty. Replace the switch.

Front Passenger's Switch (Right Rear Switch)

Position	Main Switch \ Terminal	1 [13]	2 [14]	3 [15]	11
OFF	ON	○	○		○
	OFF	○	○		
UP	ON	○		○	
	OFF	○		○	
DOWN	ON	○		○	○
	OFF		○	○	

Left Rear Switch

Position	Main Switch \ Terminal	20	21	22	11
OFF	ON		○	○	○
	OFF		○	○	
UP	ON	○		○	
	OFF	○		○	
DOWN	ON	○	○	○	○
	OFF	○	○		

4. If the continuity is not as specified, replace the switch (see page 22-199).

Passenger's Power Window Switch Test

1. Remove the passenger's door panel.

   Front (see page 20-6).
   Rear (see page 20-17).

2. Disconnect the 8P connector (A) from the passenger's power window switch (B).

Front passenger's

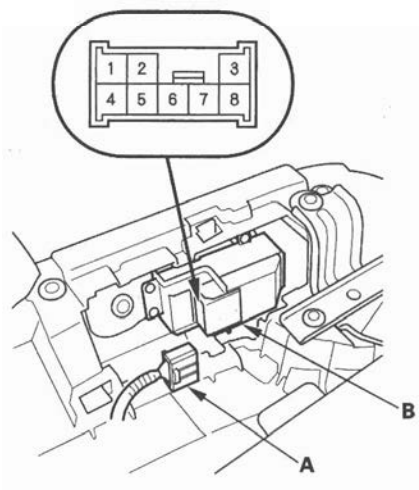

Rear

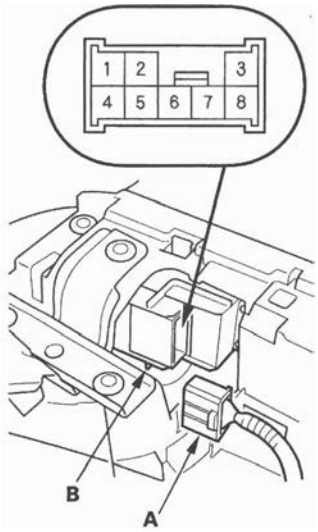

3. Check for continuity between the terminals in each switch position according to the table.

Position \ Terminal	3	4	5	7	8
OFF	○		○	○	○
UP		○	○	○	○
DOWN	○	○		○	○

4. Connect battery power to the No. 4 terminal and ground the No. 7 (or No. 8) terminal. The switch light should come on.

5. If the continuity or switch light tests is not as specified, replace the switch (see page 22-199).

Power Window Switch Replacement

Driver's

1. Remove the driver's door panel (see page 20-6).
2. Disconnect the 22P connector (A) from the power window master switch (B).

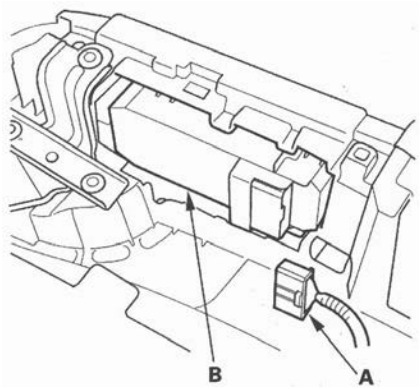

3. Remove the four screws and the power window master switch.

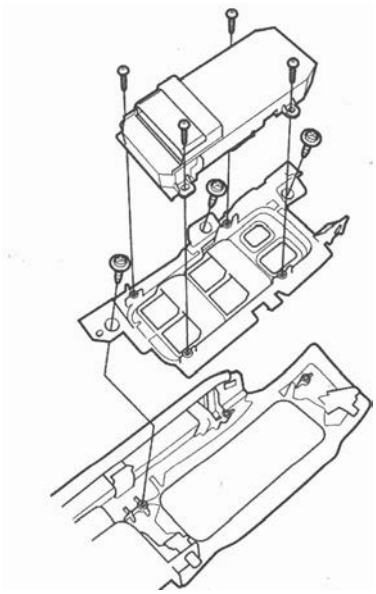

4. Install the switch in the reverse order of removal.
5. After replacement, reset the power window control unit (see page 22-189).

Passenger's

1. Remove the passenger's door panel.
   - Front (see page 20-6)
   - Rear (see page 20-17)
2. Disconnect the 8P connector (A) from the passenger's power window switch (B).

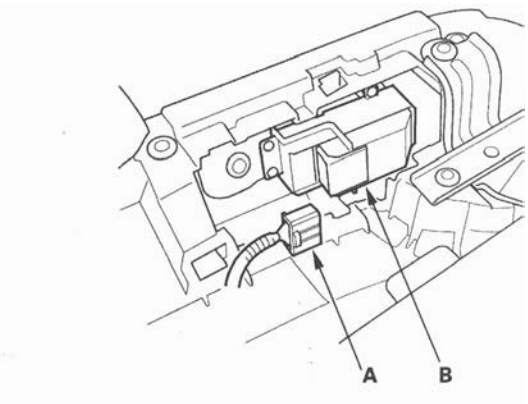

3. Remove the four screws and the passenger's power window switch.

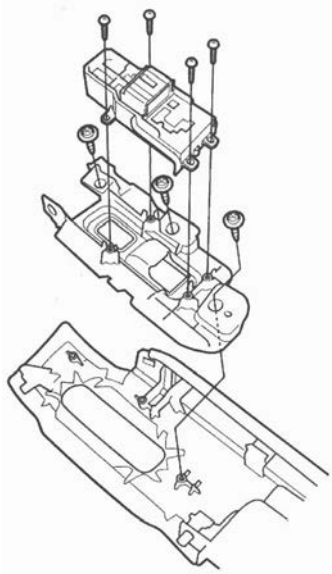

4. Install the switch in the reverse order of removal.

Component Location Index

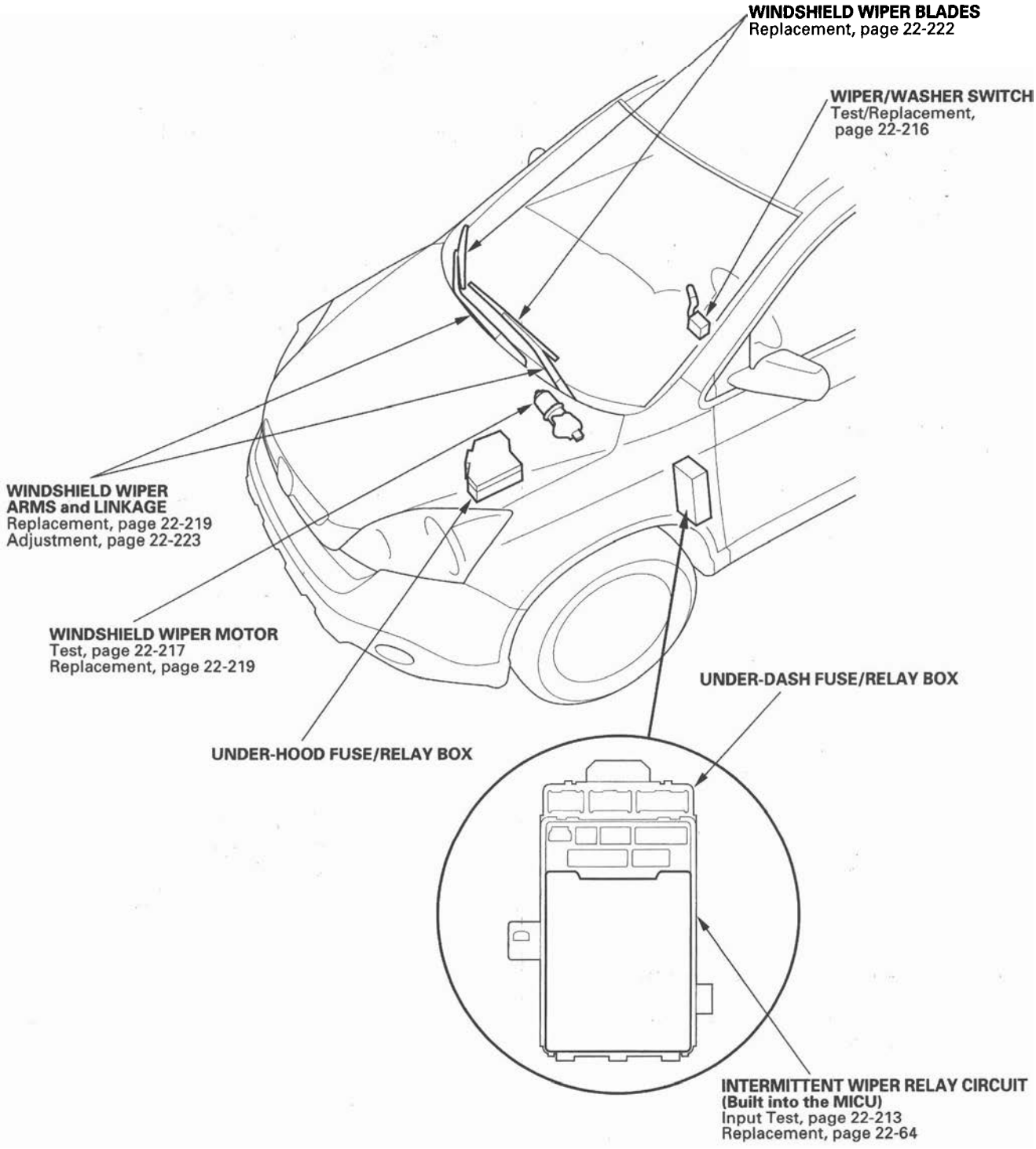

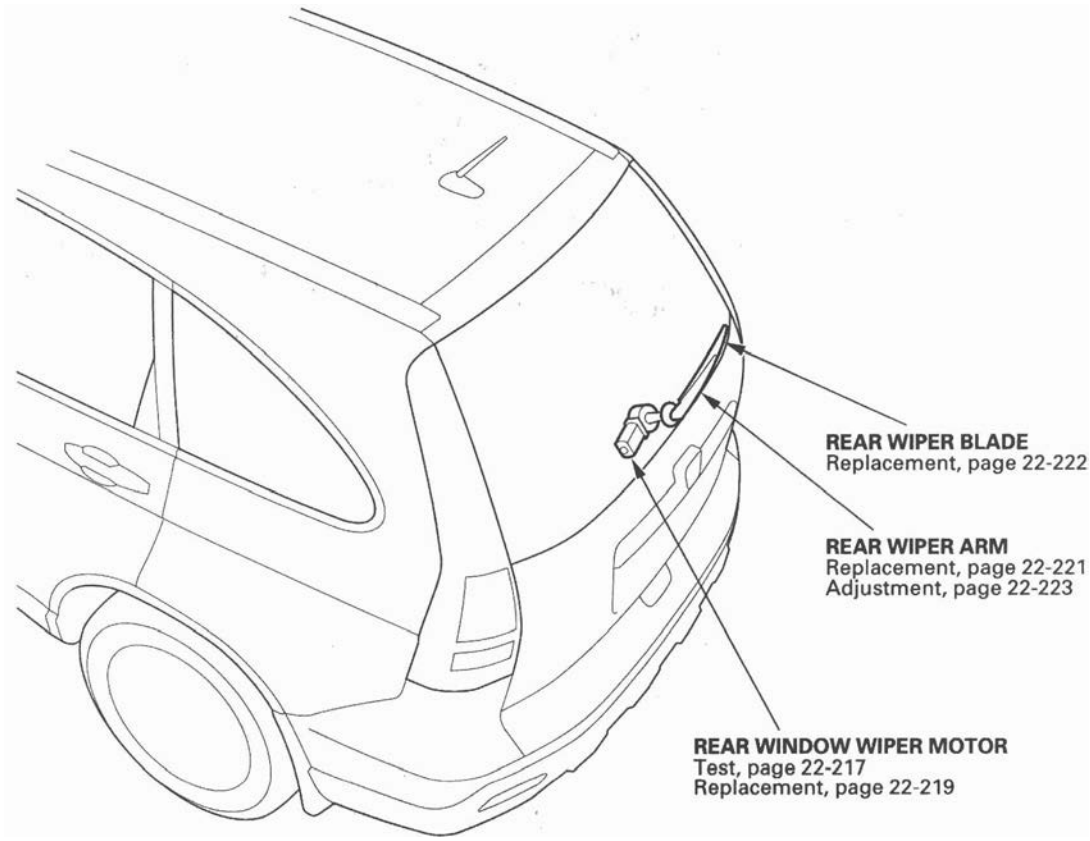
REAR WIPER BLADE
Replacement, page 22-222
REAR WIPER ARM
Replacement, page 22-221
Adjustment, page 22-223
REAR WINDOW WIPER MOTOR
Test, page 22-217
Replacement, page 22-219

(cont'd)

Component Location Index (cont'd)

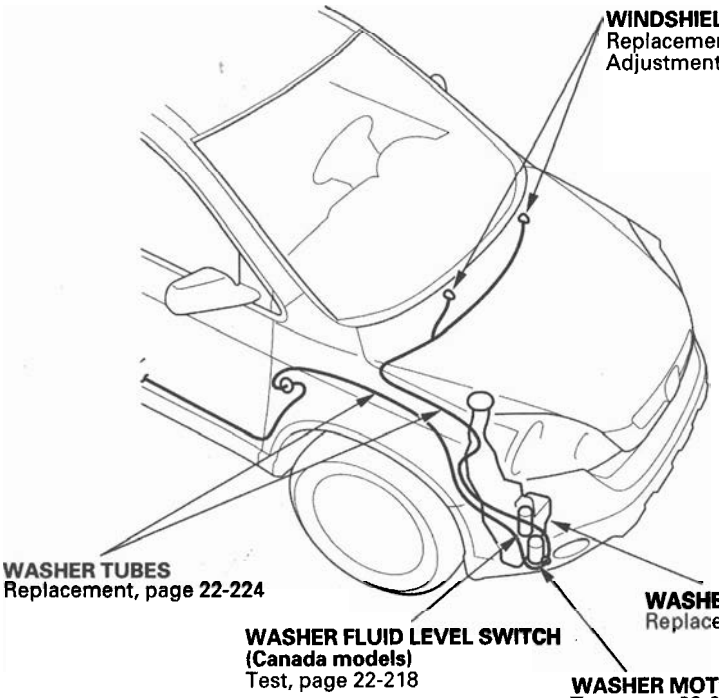

WINDSHIELD WASHER NOZZLES
Replacement, page 22-224
Adjustment, page 22-223

WASHER TUBES
Replacement, page 22-224

WASHER FLUID LEVEL SWITCH (Canada models)
Test, page 22-218

WASHER RESERVOIR
Replacement, page 22-221

WASHER MOTOR
Test, page 22-218
Replacement, page 22-221

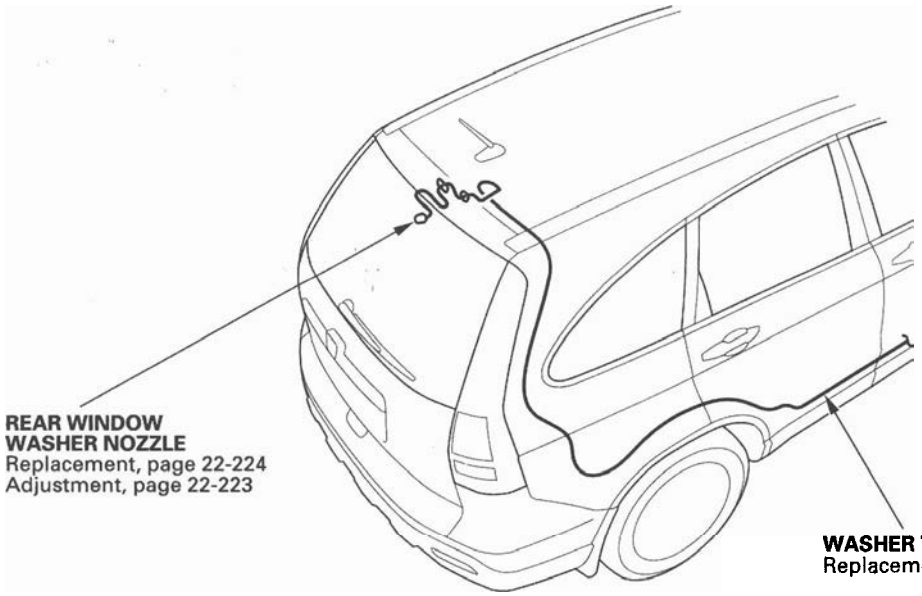

REAR WINDOW WASHER NOZZLE
Replacement, page 22-224
Adjustment, page 22-223

WASHER TUBE
Replacement, page 22-224

Circuit Diagram - Windshield

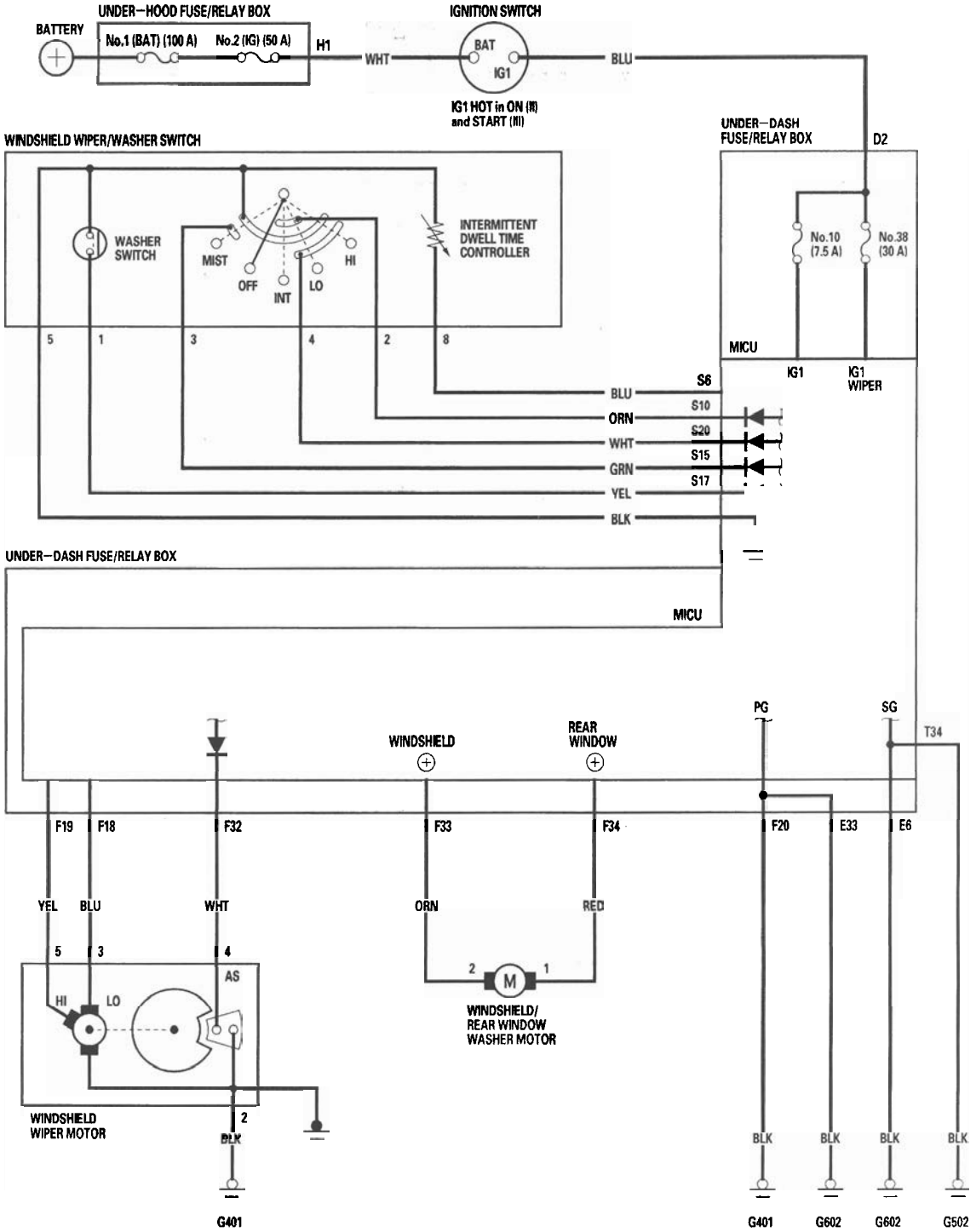

Circuit Diagram - Rear Window

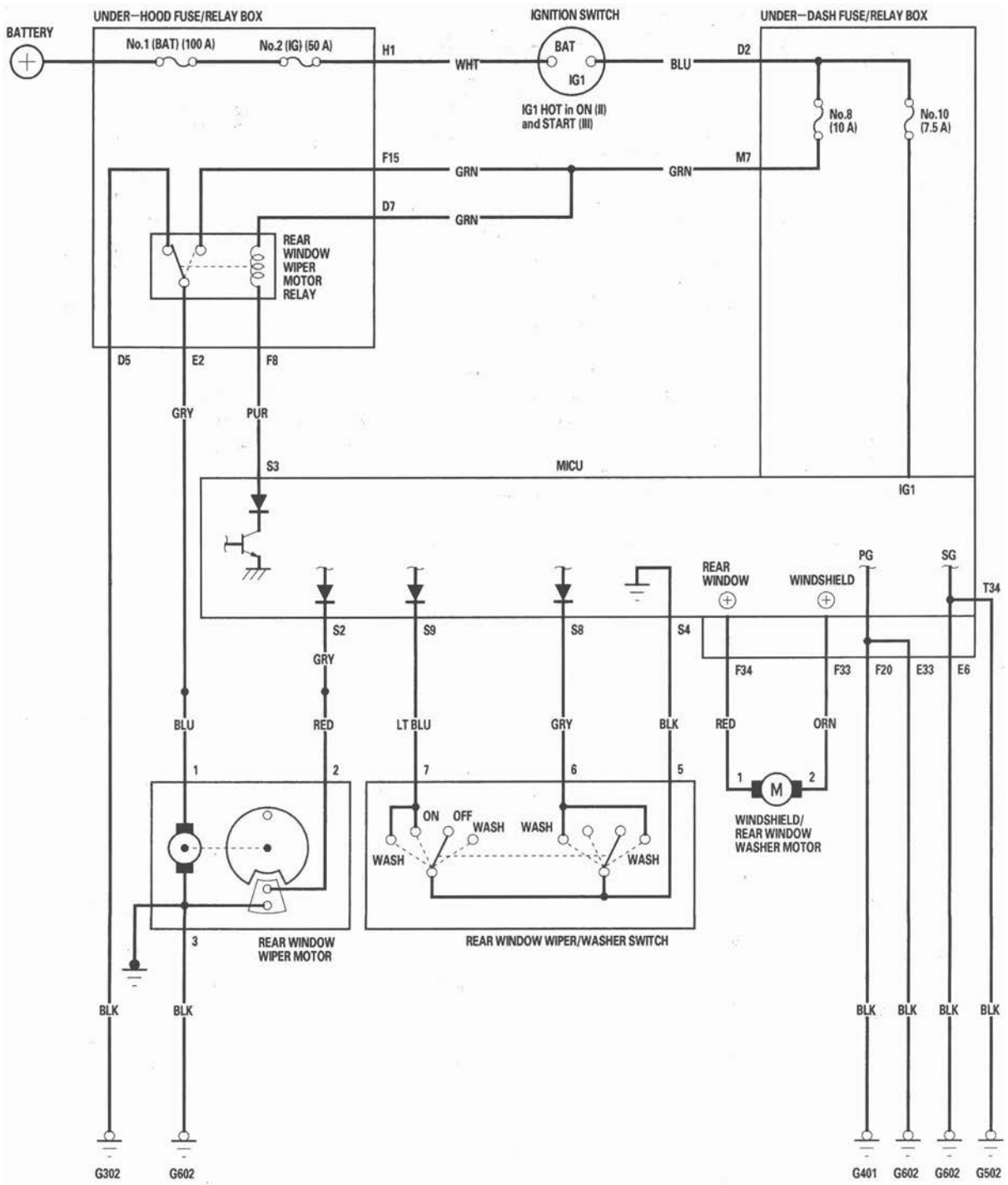

DTC Troubleshooting

DTC B1028: Rear Window Wiper Motor (As) Signal Error

NOTE: If you are troubleshooting multiple DTCs, be sure to follow the instructions in B-CAN System Diagnosis Test Mode A (see page 22-92).

1. Clear the DTCs with the HDS.
2. Turn the ignition switch OFF, and then back ON (II).
3. Operate the rear window wiper for 15 seconds or more, then turn the rear window wiper switch OFF.

   Does the rear window wiper stop in the normal park position?

   YES—Go to step 4.

   NO—Go to step 14.
4. Check for DTCs with the HDS.

   Is DTC B1028 indicated?

   YES—Go to step 5.

   NO—Intermittent failure, the system is OK at this time. Check for loose or poor connections. ■
5. Do the rear window wiper motor test (see page 22-217).

   Is the rear window wiper motor OK?

   YES—Go to step 6.

   NO—Replace the rear window wiper motor (see page 22-219). ■
6. Make sure the ignition switch is OFF, and disconnect the under-dash fuse/relay box connector S (20P).
7. Disconnect the rear window wiper motor 4P connector.
8. Connect the rear window wiper motor 4P connector No. 2 terminal and body ground with a jumper wire.

REAR WINDOW MOTOR 4P CONNECTOR

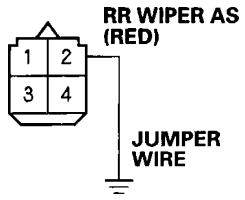

Wire side of female terminals

9. Check for continuity between the under-dash fuse/relay box connector S (20P) No. 2 terminal and body ground.

UNDER-DASH FUSE/RELAY BOX CONNECTOR S (20P)

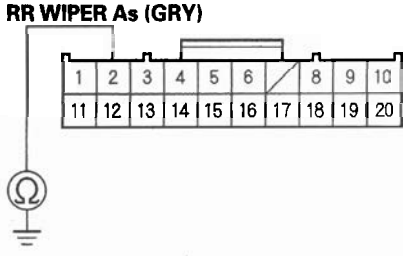

Wire side of female terminals

Is there continuity?

YES—Go to step 10.

NO—Repair an open in the wire. ■

(cont'd)

DTC Troubleshooting (cont'd)

10. Remove the jumper wire from the rear window wiper motor 4P connector.

11. Check for continuity between the under-dash fuse/relay box connector S (20P) No. 2 terminal and body ground.

UNDER-DASH FUSE/RELAY BOX CONNECTOR S (20P)

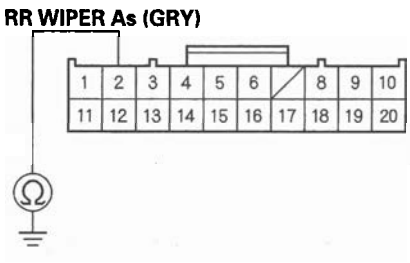

Wire side of female terminals

Is there continuity?

YES—Repair a short to ground in the wire.■

NO—Go to step 12.

12. Turn the ignition switch ON (II).

13. With the rear window wiper motor 4P connector still disconnected, measure voltage between the rear window wiper motor 4P connector No. 2 terminal and body ground.

REAR WINDOW MOTOR 4P CONNECTOR

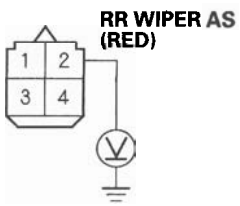

Wire side of female terminals

Is there voltage?

YES—Repair a short to power in the wire.■

NO—Faulty MICU; replace the under-dash fuse/relay box (see page 22-64).■

14. Check the No. 8 (7.5 A) fuse in the under-dash fuse/relay box.

Is the fuse OK?

YES—Go to step 15.

NO—Replace the blown fuse and recheck.■

15. Do the rear window wiper motor test (see page 22-217).

Is the rear window wiper motor OK?

YES—Go to step 16.

NO—Replace the rear window wiper motor (see page 22-219).■

16. Do the rear window wiper motor relay test (see page 22-66).

Is the rear window wiper motor relay OK?

YES—Go to step 17.

NO—Replace the rear window wiper motor relay.■

17. Disconnect the under-hood fuse/relay box connector D (8P).

18. Turn the ignition switch ON (II).

19. Measure voltage between the under-hood fuse/relay box connector D (8P) No. 7 terminal and body ground, and the under-hood fuse/relay box connector F (20P) No. 15 terminal and body ground.

UNDER-HOOD FUSE/RELAY BOX CONNECTOR D (8P)

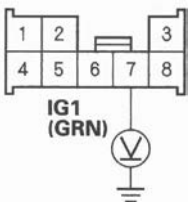

Wire side of female terminals

UNDER-HOOD FUSE/RELAY BOX CONNECTOR F (20P)

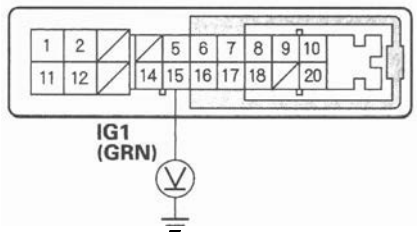

Wire side of female terminals

Is there battery voltage?

YES—Go to step 20.

NO—Repair an open in the wire.■

20. Turn the ignition switch OFF.

21. Disconnect the under-hood fuse/relay box connector E (10P).

22. Disconnect the rear window wiper motor 4P connector.

23. Connect the rear window wiper motor 4P connector No. 1 terminal and body ground with a jumper wire.

REAR WINDOW MOTOR 4P CONNECTOR

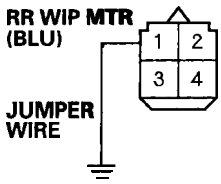

Wire side of female terminals

24. Check for continuity between the under-hood fuse/relay box connector E (10P) No. 2 terminal and body ground.

UNDER-HOOD FUSE/RELAY BOX CONNECTOR E (10P)

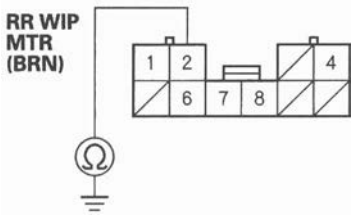

Wire side of female terminals

Is there continuity?

YES—Go to step 25.

NO—Repair an open in the wire.■

(cont'd)

DTC Troubleshooting (cont'd)

25. Check for continuity between the rear window wiper motor 4P connector No. 3 terminal and body ground.

REAR WINDOW MOTOR 4P CONNECTOR

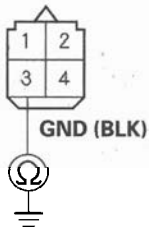

Wire side of female terminals

Is there continuity?

YES—Go to step 26.

NO—Repair an open in the wire or poor ground (G602).■

26. Check for continuity between the under-hood fuse/relay box connector F (20P) No. 8 terminal and the under-dash fuse/relay box connector S (20P) No. 3 terminal.

UNDER-HOOD FUSE/RELAY BOX CONNECTOR F (20P)
Wire side of female terminals

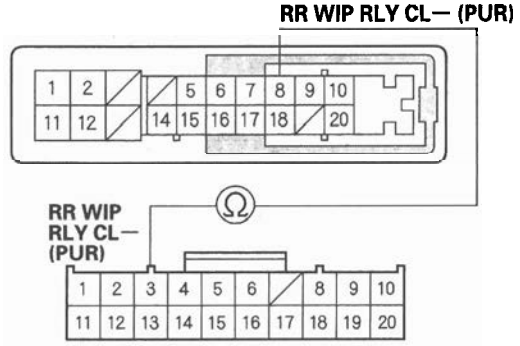

UNDER-DASH FUSE/RELAY BOX CONNECTOR S (20P)
Wire side of female terminals

Is there continuity?

YES—Faulty MICU; replace the under-dash fuse/relay box (see page 22-64).■

NO—Repair an open in the wire.■

DTC B1077: Windshield Wiper (As) Signal Error

NOTE: If you are troubleshooting multiple DTCs, be sure to follow the instructions in B-CAN System Diagnosis Test Mode A (see page 22-92).

1. Clear the DTCs with the HDS.
2. Turn the ignition switch OFF, and then back ON (II).
3. Turn the wiper switch to LOW or HIGH for at least 15 seconds, then turn the switch OFF.

   Do the wiper arms stop at the AUTO STOP (park) position?

   YES—Go to step 4.

   NO—Go to step 12.
4. Check for DTCs with the HDS.

   Is DTC B1077 indicated?

   YES—Go to step 5.

   NO—Intermittent failure, the windshield wiper system is OK at the time. Check for loose or poor connections.■
5. Turn the ignition switch OFF.
6. Do the windshield wiper motor test (see page 22-217).

   Does the wiper motor run normally?

   YES—Go to step 7.

   NO—Replace the windshield wiper motor (see page 22-219) and recheck.■
7. Disconnect the under-dash fuse/relay box connector F (34P) and windshield wiper motor 5P connector.
8. Check for continuity between the windshield wiper motor 5P connector No. 4 terminal and the under-dash fuse/relay box connector F (34P) No. 32 terminal.

UNDER-DASH FUSE/RELAY BOX CONNECTOR F (34P)
Wire side of female terminals

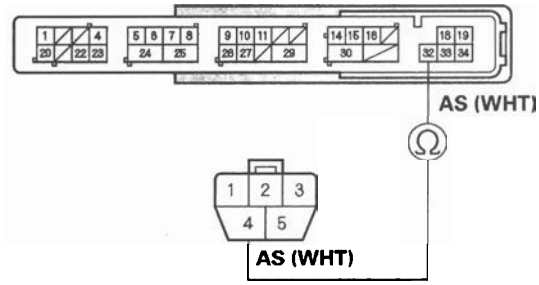

WINDSHIELD WIPER MOTOR 5P CONNECTOR
Wire side of female terminals

Is there continuity?

YES—Go to step 9.

NO—Repair an open in the WHT wire.■

9. Check for continuity between the windshield wiper motor 5P connector No. 4 terminal and body ground.

WINDSHIELD WIPER MOTOR 5P CONNECTOR

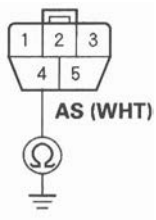

Wire side of female terminals

Is there continuity?

YES—Repair a short in the WHT wire.■

NO—Go to step 10.

10. Turn the ignition switch ON (II).

(cont'd)

DTC Troubleshooting (cont'd)

11. Measure voltage between the windshield wiper motor 5P connector No. 4 terminal and body ground.

WINDSHIELD WIPER MOTOR 5P CONNECTOR

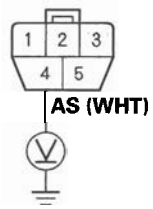

Wire side of female terminals

Is there voltage?

YES—Repair a short to power in the WHT wire. ■

NO—Faulty MICU; replace the under-dash fuse/relay box (see page 22-64). ■

12. Turn the ignition switch OFF.

13. Check the No. 38 (30 A) fuse in the under-dash fuse/relay box.

Is the fuse OK?

YES—Go to step 14.

NO—Replace the fuse and recheck the system. ■

14. Do the windshield wiper motor test (see page 22-217).

15. Reconnect the windshield wiper motor 5P connector.

16. Run the windshield wiper motor at LOW or HIGH, and measure voltage between body ground and the under-dash fuse/relay box connector F (34P) No. 18 terminal (Low) and No. 19 terminal (High) respectively.

UNDER-DASH FUSE/RELAY BOX CONNECTOR F (34P)

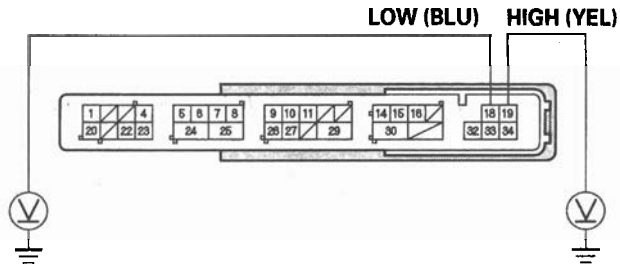

Wire side of female terminals

Is there battery voltage?

YES—Go to step 17.

NO—Faulty MICU; replace the under-dash fuse/relay box (see page 22-64). ■

17. Measure voltage between the windshield wiper motor 5P connector No. 2 terminal and body ground.

WINDSHIELD WIPER MOTOR 5P CONNECTOR

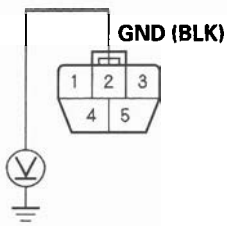

Wire side of female terminals

Is there less than 0.5 V?

YES—Repair an open or high resistance in the BLU (LO) or YEL (HI) wire. ■

NO—Repair an open in the BLK wire or poor ground (G302). ■

DTC B1281: Windshield Wiper Switch MIST Position Circuit Malfunction

DTC B1282: Windshield Wiper Switch INT (AUTO) Position Circuit Malfunction

DTC B1283: Windshield Wiper Switch LOW Position Circuit Malfunction

DTC B1284: Windshield Wiper Switch HIGH Position Circuit Malfunction

NOTE: If you are troubleshooting multiple DTCs, be sure to follow the instructions in B-CAN System Diagnosis Test Mode A (see page 22-92).

1. Clear the DTCs with the HDS.
2. Turn the ignition switch OFF, and then back ON (II).
3. Turn the windshield wiper switch in MIST, INT, LOW, HIGH and OFF positions.
4. Check the DTCs with the HDS.

   Is DTC B1281, B1282, B1283, or B1284 indicated?

   YES—Go to step 5.

   NO—Intermittent failure, the wiper system is OK at this time. Check for loose or poor connections. ■
5. Select WIPERS from the BODY ELECTRICAL menu, and enter the DATA LIST.
6. Check the ON/OFF information of the WINDSHIELD WIPER SWITCH (MIST), WINDSHIELD WIPER SWITCH (INT), WINDSHIELD WIPER SWITCH (LOW), and WINDSHIELD WIPER SWITCH (HIGH) in the DATA LIST.

   Is the WINDSHIELD WIPER SWITCH (MIST) information indicator OFF, WINDSHIELD WIPER SWITCH (INT) information indicator OFF, WINDSHIELD WIPER SWITCH (LOW) information indicator OFF, and WINDSHIELD WIPER SWITCH (HIGH) information indicator OFF with the windshield wiper switch in the OFF position?

   YES—Go to step 14.

   NO—Go to step 7.
7. Turn the ignition switch OFF.
8. Disconnect the 8P connector from the windshield wiper switch.
9. Check the ON/OFF information of the WINDSHIELD WIPER SWITCH (MIST), WINDSHIELD WIPER SWITCH (INT), WINDSHIELD WIPER SWITCH (LOW), and WINDSHIELD WIPER SWITCH (HIGH) in the DATA LIST.

   Are the information indicators OFF?

   YES—Faulty windshield wiper switch; replace it. ■

   NO—Go to step 10.
10. Turn the ignition switch OFF.
11. Disconnect under-dash fuse/relay box connector S (20P).

(cont'd)

DTC Troubleshooting (cont'd)

12. Check for continuity between body ground and under-dash fuse/relay box connector S (20P) terminals No. 10, No. 20, and No. 15 individually.

UNDER-DASH FUSE/RELAY BOX CONNECTOR S (20P)

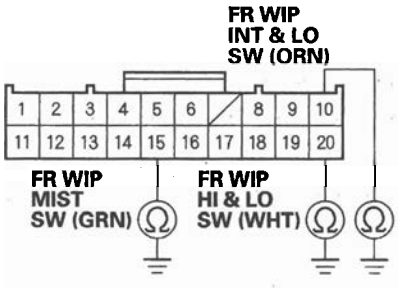

Wire side of female terminals

Is there continuity?

YES—Repair a short to ground in the wire.■

NO—Go to step 13.

13. Check for continuity between under-dash fuse/relay box connector S (20P) No. 4 and terminals No. 10, No. 15 and No. 20 terminals individually.

UNDER-DASH FUSE/RELAY BOX CONNECTOR S (20P)

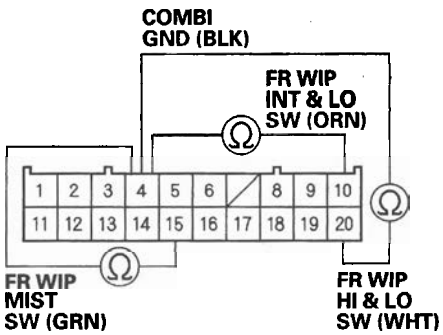

Wire side of female terminals

Is there continuity?

YES—Repair a short between the wires.■

NO—Faulty MICU; replace the under-dash fuse/relay box (see page 22-64).■

14. Check for continuity between the under-dash fuse/relay box connector S (20P) terminals No. 10, No. 15 and, No. 20 as shown:

From terminal	To terminal
10	15, 20
15	20

Is there continuity?

YES—Repair a short between the wires.■

NO—Faulty MICU; replace the under-dash fuse/relay box (see page 22-64).■

MICU Input Test

1. Before testing, troubleshoot the B-CAN System Diagnosis Test Mode A (see page 22-92), and check the No. 8 (10 A), No. 10 (7.5 A), and No. 38 (30 A) fuses in the under-dash fuse/relay box.

2. Disconnect under-dash fuse/relay box connectors E, F, S, and T.

   NOTE: All connector views are wire side of female terminals.

CONNECTOR E (42P)

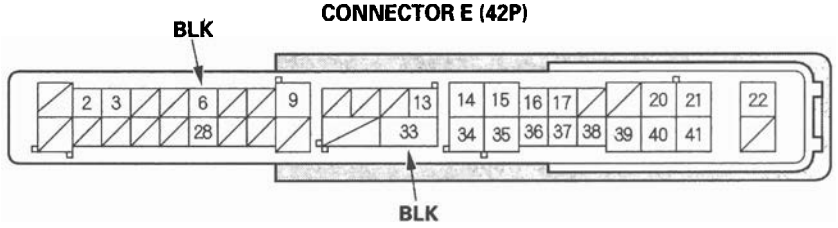

CONNECTOR F (34P)

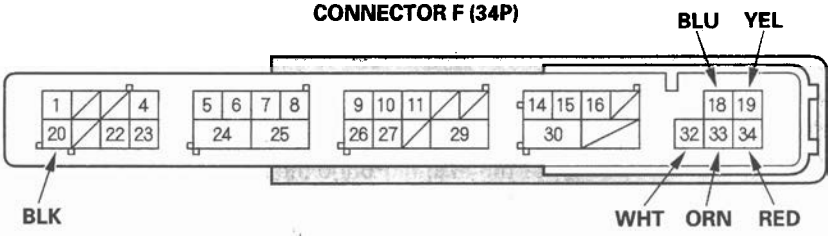

CONNECTOR S (20P)

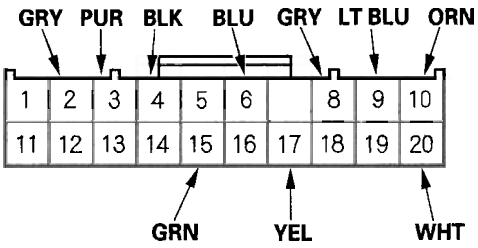

CONNECTOR T (34P)

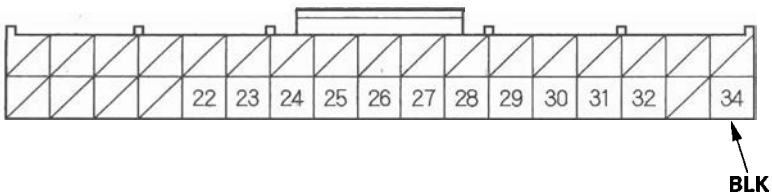

3. Inspect the connector and socket terminals to be sure they are all making good contact.

   - If the terminals are bent, loose or corroded, repair them as necessary and recheck the system.
   - If the terminals look OK, go to step 4.

(cont'd)

MICU Input Test (cont'd)

4. With the connectors still disconnected, make these input tests at the appropriate connector.

   - If any test indicates a problem, find and correct the cause, then recheck the system.
   - If all the input tests prove OK, go to step 5.

Cavity	Wire	Test condition	Test: Desired result	Possible cause if result is not obtained
F18	BLU	Under all conditions	Connect battery power to the F18 terminal: The windshield wiper motor should run at low speed.	• Poor ground (G401) • Faulty windshield wiper motor • An open in the wire
F19	YEL	Under all conditions	Connect battery power to the F19 terminal: The windshield wiper motor should run at high speed.	• Poor ground (G401) • Faulty windshield wiper motor • An open in the wire
F32	WHT	Under all conditions (disconnect the windshield wiper motor 5P connector)	Check for continuity between the F32 terminal and the windshield wiper motor 5P connector No. 4 terminal: There should be continuity.	An open in the wire
F33	ORN	Under all conditions	Connect battery power to the F33 terminal and ground the F34 terminal: The windshield washer motor should run.	• Faulty washer motor • An open in the wire
F34	RED	Under all conditions	Connect battery power to the F34 terminal and ground the F33 terminal: The windshield washer motor should run.	• Faulty washer motor • An open in the wire
S2	GRY	Under all conditions (disconnect the rear window wiper motor 4P connector)	Check for continuity between the S2 terminal and the rear window wiper motor 4P connector No. 2 terminal: There should be continuity.	An open in the wire
S3	PUR	Ignition switch ON (II)	Check for voltage to ground: There should be battery voltage.	• Blown No. 8 (10 A) fuse in the under-dash fuse/relay box • Faulty rear window wiper motor relay • An open in the wire
			Attach to ground: The rear window wiper motor should work.	• Poor ground (G602) • Faulty rear window wiper motor relay • An open in the wire
S6 · S4	BLU · BLK	Intermittent dwell timer turned	Check resistance between S6 and S4 terminals: The resistance should vary between 0 to 1 kΩ.	• Faulty wiper/washer switch • An open in the wire

5. Reconnect the connectors to the under-dash fuse/relay box, and make these input tests at the connectors.

- If any test indicates a problem, find and correct the cause, then recheck the system.
- If all the input tests prove OK, the MICU must be faulty; replace the under-dash fuse/relay box (see page 22-64).

Cavity	Wire	Test condition	Test: Desired result	Possible cause if result is not obtained
E6 E33	BLK	Under all conditions	Check for voltage to ground: There should be less than 0.5 V.	• Poor ground (G602) • An open in the wire
T34	BLK	Under all conditions	Check for voltage to ground: There should be less than 0.5 V.	• Poor ground (G502) • An open in the wire
S10 · S4	ORN · BLK	Windshield wiper switch (LOW) ON	Check for voltage between S10 and S4 terminals, and S20 and S4 terminals: There should be less than 1 V.	• Faulty wiper/washer switch • An open in the wire
		Windshield wiper switch OFF	Check for voltage between S10 and S4 terminals, and S20 and S4 terminals: There should be 5 V or more.	• Faulty wiper/washer switch • A short to ground in the wire
S15 · S4	GRN · BLK	Windshield wiper switch (MIST) ON	Check for voltage between S15 and S4 terminals: There should be less than 1 V.	• Faulty wiper/washer switch • An open in the wire
		Windshield wiper switch (MIST) OFF	Check for voltage between S15 and S4 terminals: There should be 5 V or more.	• Faulty wiper/washer switch • A short to ground in the wire
S17 · S4	YEL · BLK	Windshield washer switch ON	Check for voltage between S17 and S4 terminals: There should be less than 1 V.	• Faulty wiper/washer switch • An open in the wire
		Windshield washer switch OFF	Check for voltage between S17 and S4 terminals: There should be 5 V or more.	• Faulty wiper/washer switch • A short to ground in the wire
S20 · S4	WHT · BLK	Windshield wiper switch (INT) ON	Check for voltage between S20 and S4 terminals: There should be less than 1 V.	• Faulty wiper/washer switch • An open in the wire
		Windshield wiper switch OFF	Check for voltage between S20 and S4 terminals: There should be 5 V or more.	• Faulty wiper/washer switch • A short to ground in the wire
	WHT · BLK	Windshield wiper switch (HIGH) ON	Check for voltage between S20 and S4 terminals: There should be less than 1 V.	• Faulty wiper/washer switch • An open in the wire
		Windshield wiper switch OFF	Check for voltage between S20 and S4 terminals: There should be 5 V or more.	• Faulty wiper/washer switch • A short to ground in the wire
S8 · S4	GRY · BLK	Rear window washer switch ON	Check for voltage between S8 and S4 terminals: There should be less than 1 V.	• Faulty wiper/washer switch • An open in the wire
		Rear window washer switch OFF	Check for voltage between S8 and S4 terminals: There should be 5 V or more.	• Faulty wiper/washer switch • A short to ground in the wire
S9 · S4	LT BLU · BLK	Rear window wiper switch ON	Check for voltage between S9 and S4 terminals: There should be less than 1 V.	• Faulty wiper/washer switch • An open in the wire
		Rear window wiper switch OFF	Check for voltage between S9 and S4 terminals: There should be 5 V or more.	• Faulty wiper/washer switch • A short to ground in the wire

Wiper/Washer Switch Test/Replacement

1. Remove the steering column covers (see page 20-107).

2. Disconnect the dashboard wire harness 8P connector (A) from the wiper/washer switch (B).

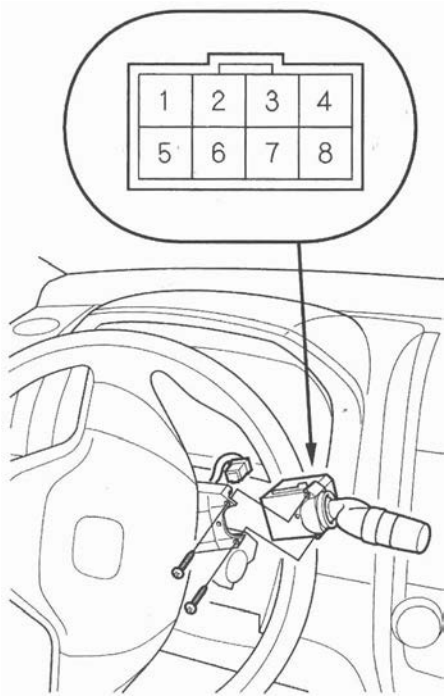

3. Remove the two screws, then slide out the wiper/washer switch.

4. Inspect the connector terminals to be sure they are all making good contact.

   - If the terminals are bent, loose or corroded, repair them as necessary, and recheck the system.
   - If the terminals look OK, go to step 5.

5. Check for continuity between the terminals in each switch position according to the table.

Windshield

Position \ Terminal	1	2	3	4	5		8
OFF							
INT		○			○		
LO		○		○	○		
HI				○	○		
Mist ON			○		○		
Washer ON	○				○		
Intermittent dwell timer turned					○	~	○

Rear Window

Position \ Terminal	5	6	7
Washer switch ON, wiper switch OFF	○	○	
OFF			
ON	○	○	○
Wiper and Washer switch ON	○		○

6. If the continuity is not as specified, replace the switch.

7. Install the switch in the reverse order of removal.

Wiper Motor Test

Windshield

1. Open the hood. Remove the caps, nuts, and the windshield wiper arms (see page 22-219).

   NOTE: Carefully remove the wiper arms so that they do not touch the hood.

2. Remove the hood seal and cowl covers (see page 22-219).

3. Disconnect engine compartment wire harness 5P connector C302 (A) from the windshield wiper subharness C302 (B).

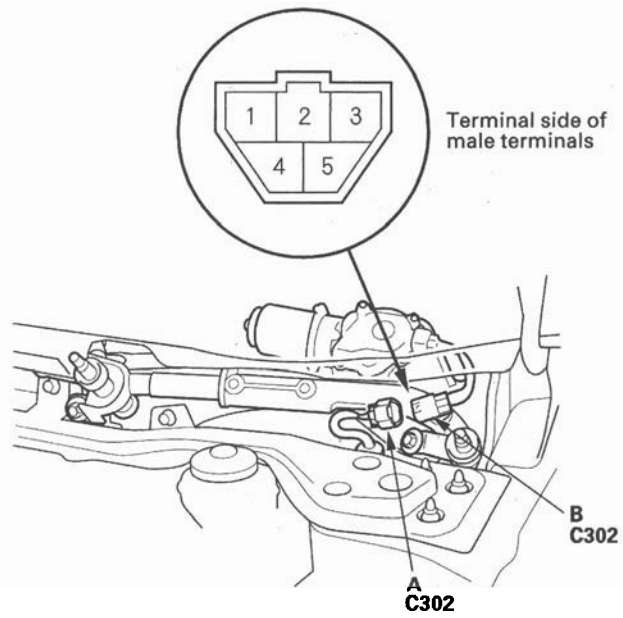

4. Test the motor by connecting battery power to the No. 3 terminal and ground to the No. 2 terminal of the windshield wiper motor subharness 5P connector C302 (B). The motor should run at low speed.

5. Test the motor by connecting battery power to the No. 5 terminal and ground to the No. 2 terminal of the windshield wiper motor subharness 5P connector C302 (B). The motor should run at high speed.

6. Connect an analog ohmmeter to the No. 4 and No. 2 terminals, and run the motor at low or high speed. The needle of the ohmmeter should pulse.

7. If there is no pulse, or the motor does not run, or fails to run smoothly, check for continuity of the windshield wiper motor subharness, if the wire harness is OK, replace the motor.

Rear Window

1. Open the tailgate, and remove the tailgate lower panel (see page 20-78).

2. Disconnect the 4P connector (A) from the wiper motor (B).

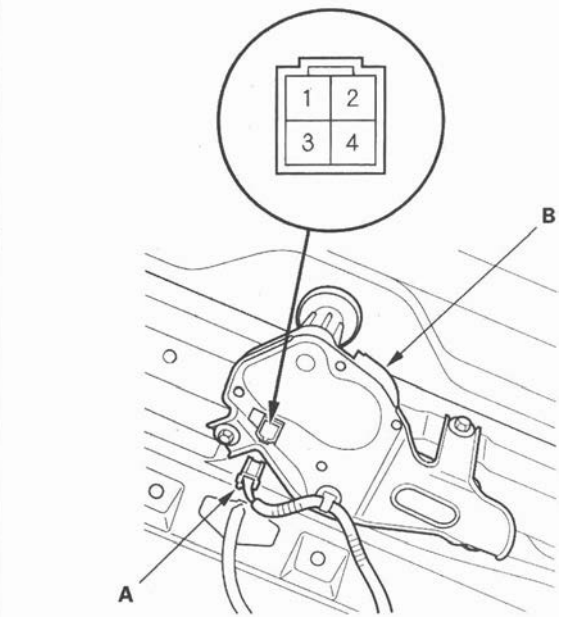

3. Test the motor by connecting battery power to the No. 1 terminal and ground the No. 3 terminal of the wiper motor. The motor should run. If the motor does not run or fails to run smoothly, replace the motor.

4. Connect an analog ohmmeter to the No. 2 and No. 3 terminals, and run the motor. The needle of the ohmmeter should pulse. If it does not, replace the motor.

Washer Motor Test

1. Remove the right inner fender (see page 20-181).
2. Disconnect the 2P connector (A) from the washer motor (B).

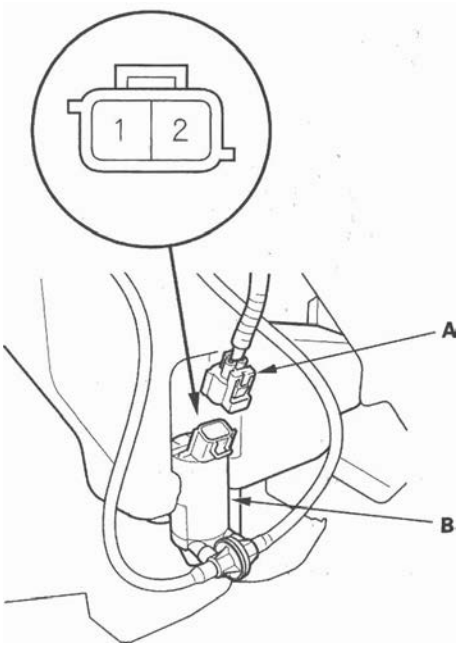

3. Test the motor by connecting battery power to the No. 2 [No. 1] terminal and ground the No. 1 [No. 2] terminal of the washer motor. The motor should run.
   [ ] : Rear window washer direction.

   - If the motor does not run or fails to run smoothly, replace it.
   - If the motor runs smoothly, but little or no washer fluid is pumped, check for a disconnected or blocked washer hose, or a clogged washer motor outlet.

Washer Fluid Level Switch Test

Canada models

1. Remove the right inner fender (see page 20-181).
2. Disconnect the 2P connector (A) from the washer fluid level switch (B).

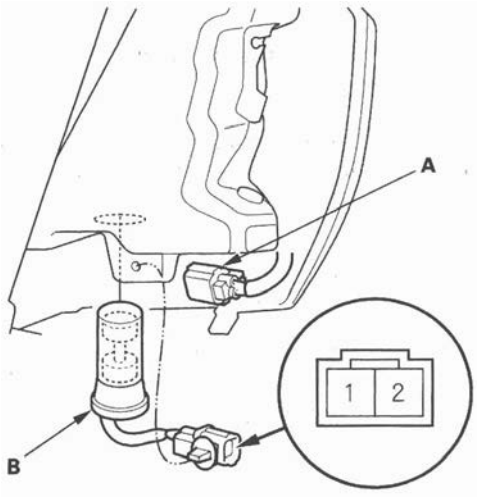

Terminal side of male terminals

3. Remove the washer fluid level switch from the washer reservoir.

   NOTE: Fluid may flow out of the opening.

4. Check for continuity between the No. 1 and No. 2 terminals in each float position.

   - There should be continuity when the float is down.
   - There should be no continuity when the float is up.

5. If the continuity is not as specified, replace the switch.

Wiper Motor Replacement

Windshield (Removal)

1. Open the hood. Remove the caps, nuts (A), and the windshield wiper arms (B).

   NOTE: Carefully remove the wiper arms so that they do not touch the hood.

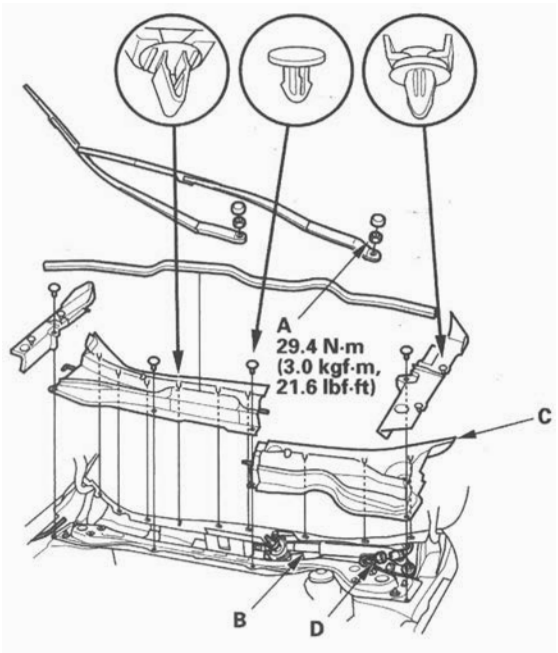

2. Remove the hood seal and cowl covers (C).
3. Disconnect the 5P connector (D) from the wiper motor.
4. Remove the bolts and the under-cowl panel (A).

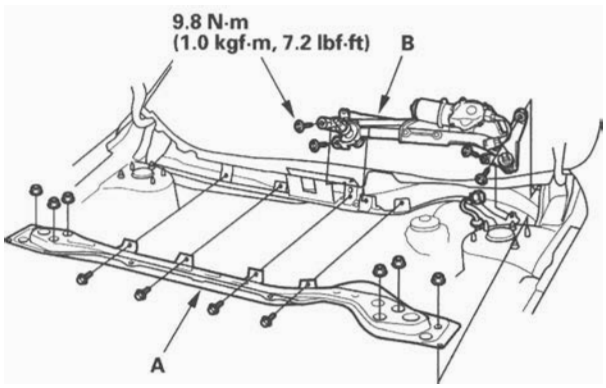

5. Remove the four bolts and wiper linkage assembly (B).
6. Remove the nut (A), and separate the link (B) from windshield wiper motor (C).

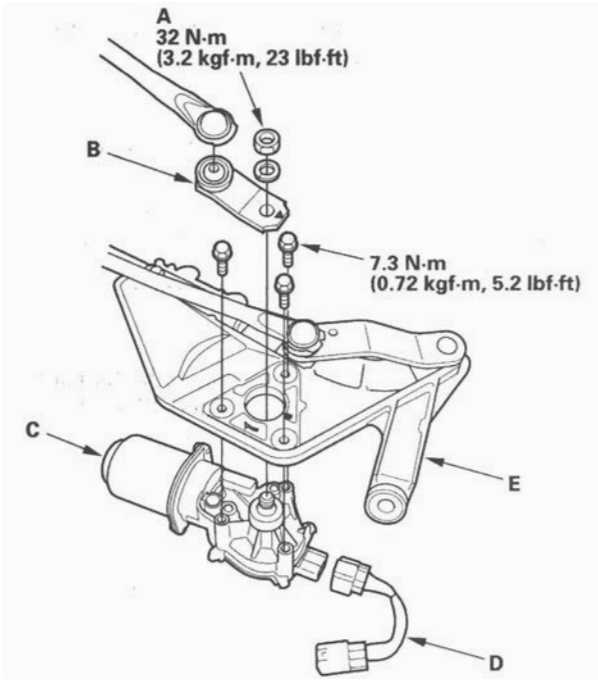

7. Disconnect the windshield wiper motor subharness (D), then remove the three bolts, and separate the windshield wiper linkage (E) from the wiper motor.

(cont'd)

Wiper Motor Replacement (cont'd)

Windshield (Installation)

1. Plug in motor alone, turn the wiper/washer switch to (LO) or (HI) ON, then OFF to return the motor shaft to the park position.

   NOTE:
   - Do not use the wiper/washer switch (INT) position in this step.
     If necessary, replace any damaged clips.
     Apply multipurpose grease to the moving parts.

2. Install the wiper motor to the wiper linkage assembly.

3. Install the link to the wiper motor shaft, then align the mark (A) of the link and the mark (B) of the wiper linkage assembly.

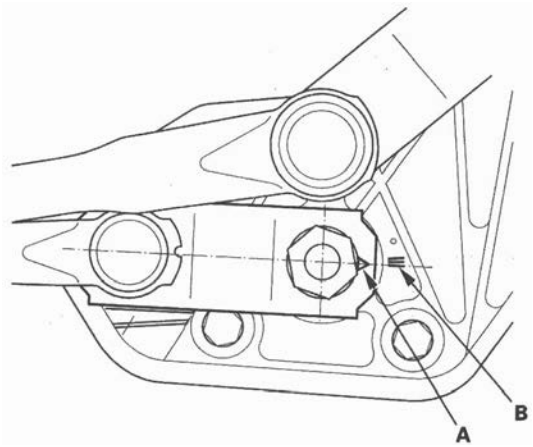

4. Before installing the wiper linkage assembly to the vehicle, mark sure the mark (A) of the link and the mark (B) of the linkage assembly are still aligned.

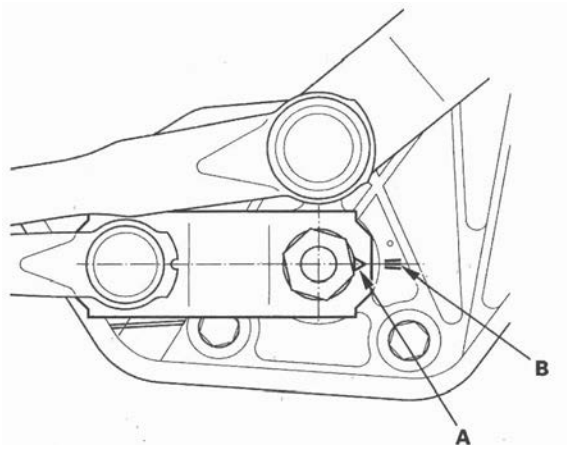

5. After installation, adjust the wiper arms (see page 22-223).

Rear Window

1. Open the tailgate, and remove the tailgate lower panel (see page 20-78).
2. Remove the cap (A), mounting nut (B), wiper arm (C), and special nut (D).

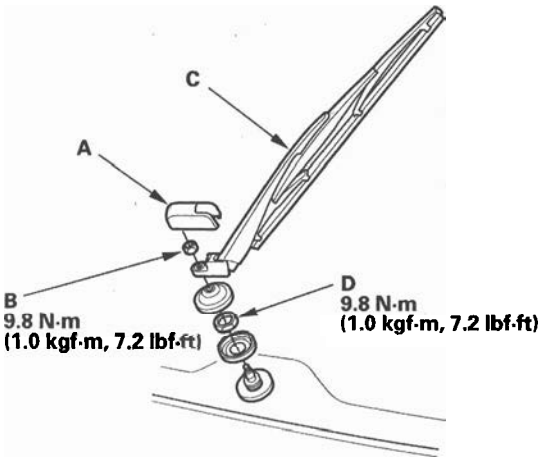

3. Disconnect the 4P connector (A), from the rear window wiper motor (B).

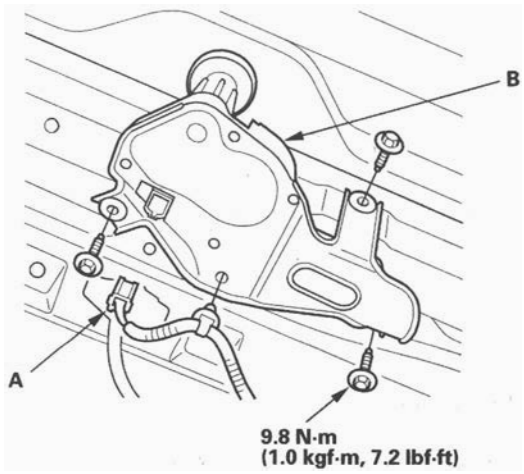

4. Remove the three bolts and wiper motor.
5. Install the wiper motor in the reverse order of removal.

Washer Reservoir Replacement

1. Remove the right inner fender (see page 20-181).
2. Disconnect the 2P connector(s) (A) from the washer motor (B) and the washer fluid level switch (Canada models).

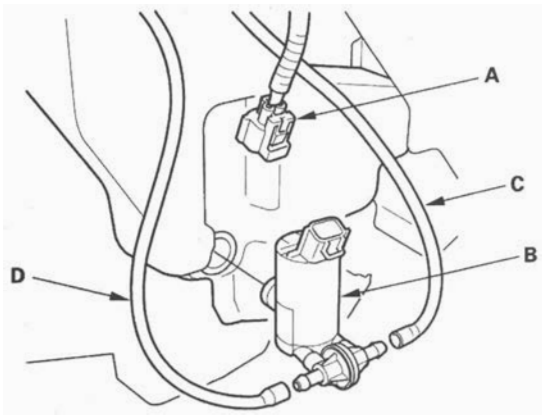

3. Disconnect the windshield washer tube (C) and the rear window washer tubes (D).
4. Remove the clip from the filler neck (A), then disconnect the filler neck.

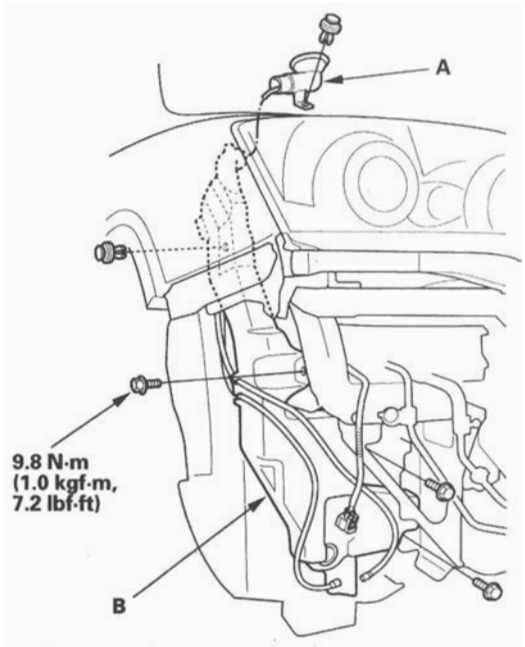

5. Remove the clip and bolts, then remove the washer reservoir (B).
6. Install the washer reservoir in the reverse order of removal.

Wiper Blade Replacement

Windshield

1. Lift the wiper arms off the windshield.
2. Pull up and hold the tab (A), and slide the wiper blade (B) toward the tabs until it releases from the wiper arm (C).

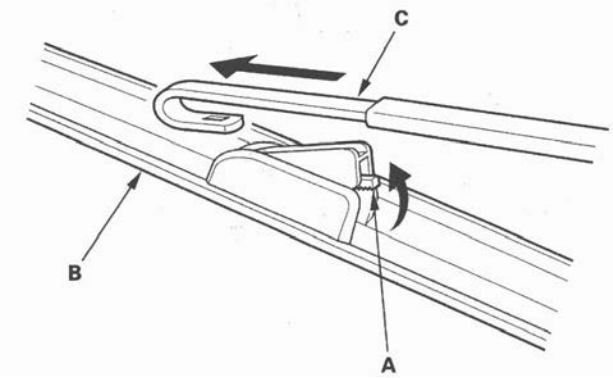

3. Find the blade labeled "SET" (A), then release the blade from it.

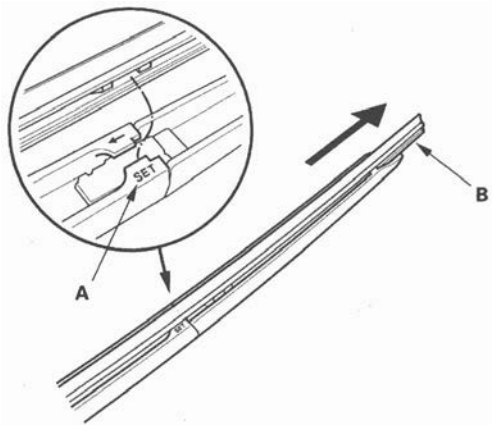

4. Pull back the end of the blade and slide out the old rubber (B).
5. Install a new rubber in the reverse order of removal.
6. Install the wiper blades onto the windshield wiper arms in the reverse order of removal.
7. Test by turning on the wipers. If the blades slip, turn off the wipers and seat the attachments more firmly.

Rear Window

1. Lift the wiper arm off the window.
2. Turn the blade (A) to release it from the wiper arm (B).

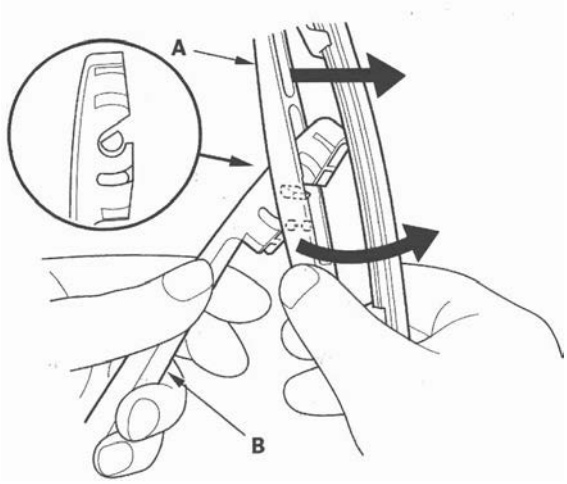

3. Pull back the end of the blade, and slide out the old rubber (A).

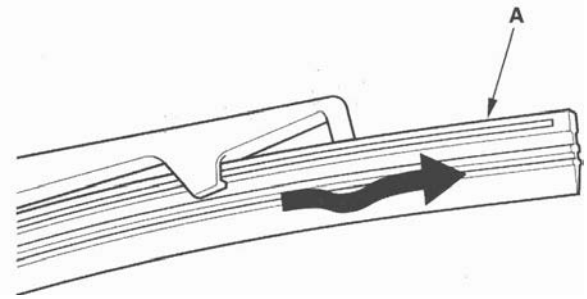

4. Install a new rubber in the reverse order of removal.
5. Install the wiper blade onto the rear window wiper arm in the reverse order of removal.
6. Test by turning on the wiper. If the blade slips, turn off the wiper and reinstall the wiper blade securely.

Wiper Arm/Nozzle Adjustment

1. Turn the windshield wipers ON then OFF, make sure when the wiper arms stop at the park position.

Windshield wiper arms stop position
a: Position at about 1.7 in. (43 mm) from the top of cowl cover (A).
b: Position at about 1.4 in. (35 mm) from the top of cowl cover (A).

Rear window wiper arms stop position
c: Align the wiper arms on the lowest wire of the rear window defogger (E).

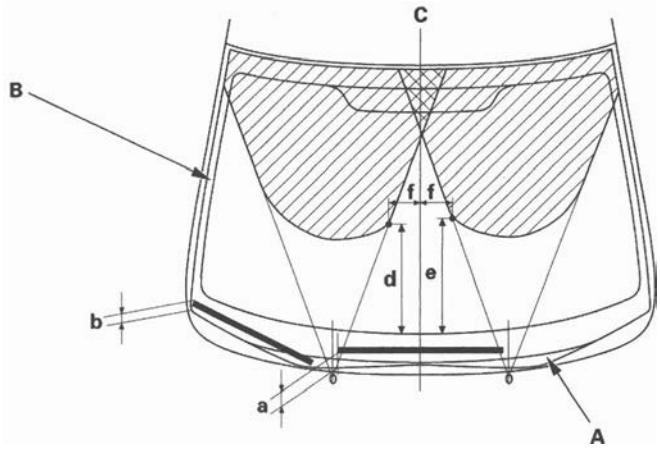

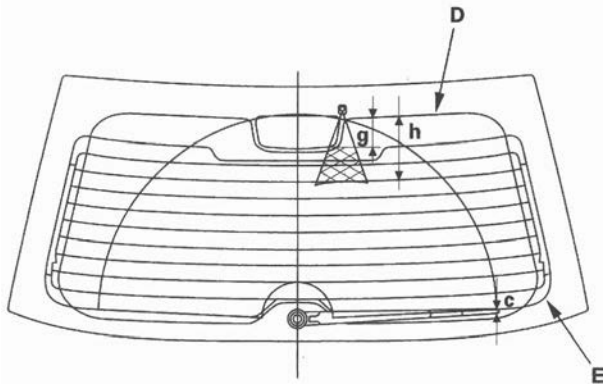

2. When you turn on the washer(s), confirm 50 % or more of the washer fluid lands within the spray area. If the spray area is not within the standard positions, adjust the nozzle(s).

Windshield washer nozzle position
d: Position at about 12.9 in. (327 mm) from the top of the black ceramic area (B) at the lower windshield.
e: Position at about 13.7 in. (347 mm) from the top of the black ceramic area (B) at the lower windshield.
f: Position at about 4.8 in. (123 mm) from the windshield center line (C).

Rear window washer nozzle position
g: Position at about 1.5 in. (57 mm) from the rear window center line (D) at the upper rear window.
h: Position at about 4.2 in. (132 mm) from top of the black ceramic area (D) at the upper rear window.

Washer Tube Replacement

Windshield

1. Remove the right inner fender (see page 20-181).
2. Remove the washer nozzles and clips, then remove the tubes.

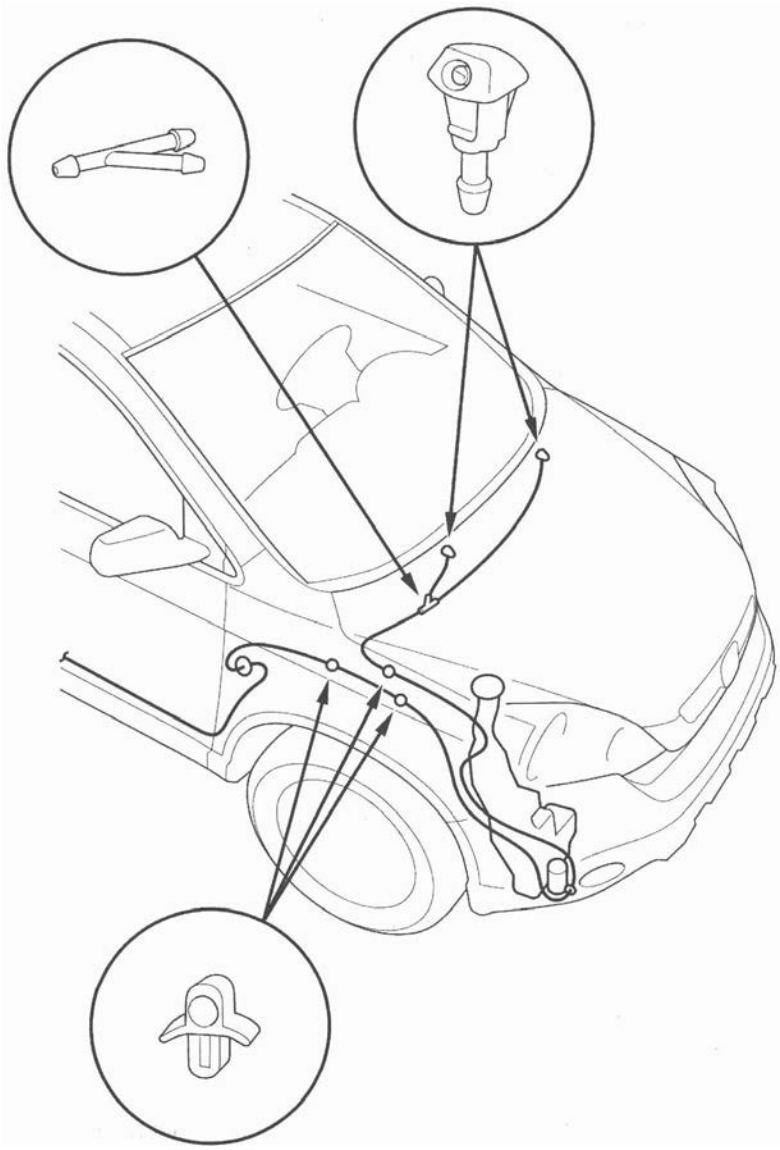

3. Install in the reverse order of removal. Take care not to pinch the washer tubes. Check the washer operation.

Rear Window

1. Open the tailgate, and lower the rear of the headliner (see page 20-83).

2. Remove the washer nozzle and clips, then remove the tube.

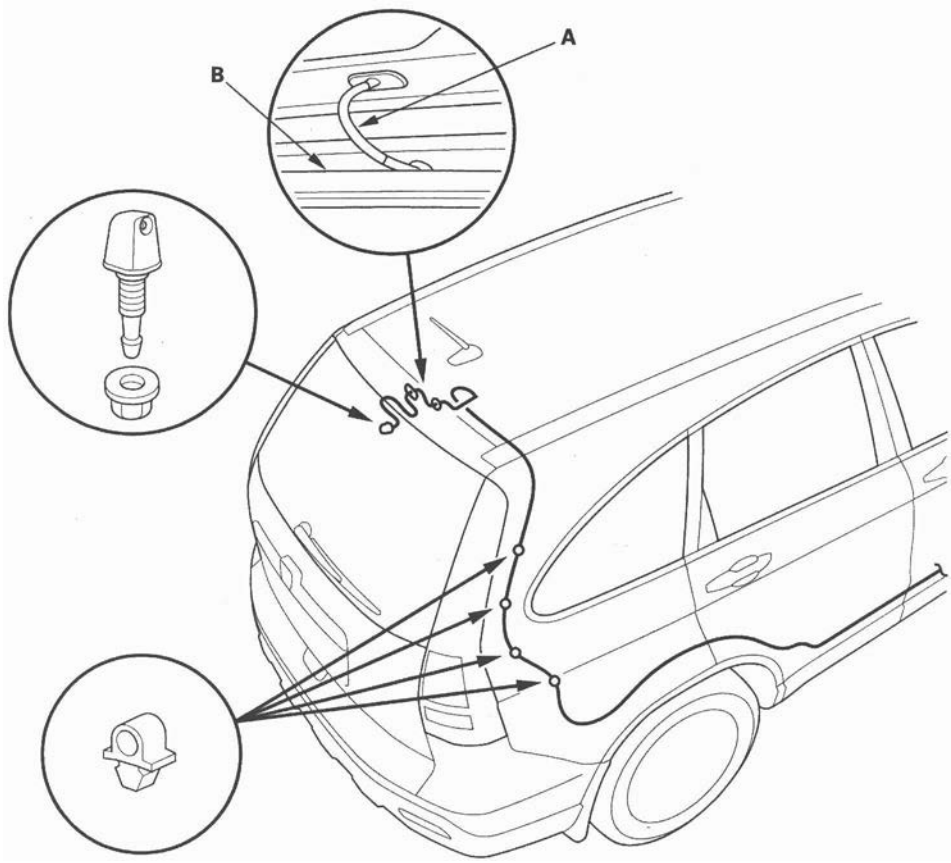

3. Install the parts in the reverse order of removal. Take care not to pinch the washer tube. Check the washer operation.

   NOTE: Even if the washer tube is pinched between the weatherstrip and the tailgate, the washer may operate, but it may allow water to leak at the weaterstrip. Make sure the tube is aligned, and adjust the tube by twisting if as needed.

Component Location Index

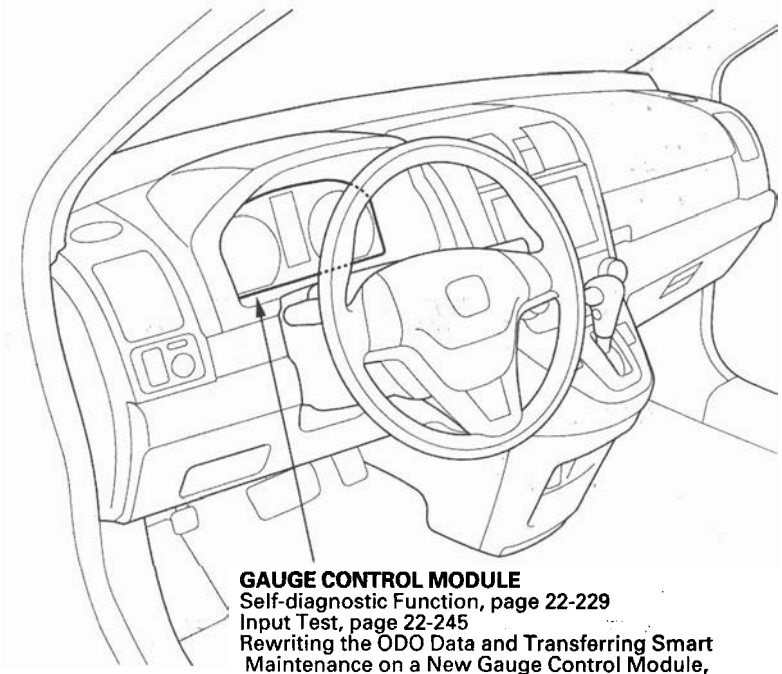

GAUGE CONTROL MODULE
Self-diagnostic Function, page 22-229
Input Test, page 22-245
Rewriting the ODO Data and Transferring Smart Maintenance on a New Gauge Control Module, page 22-247
Replacement, page 22-248
Outside Air Temperature Indicator Calibration, page 22-249

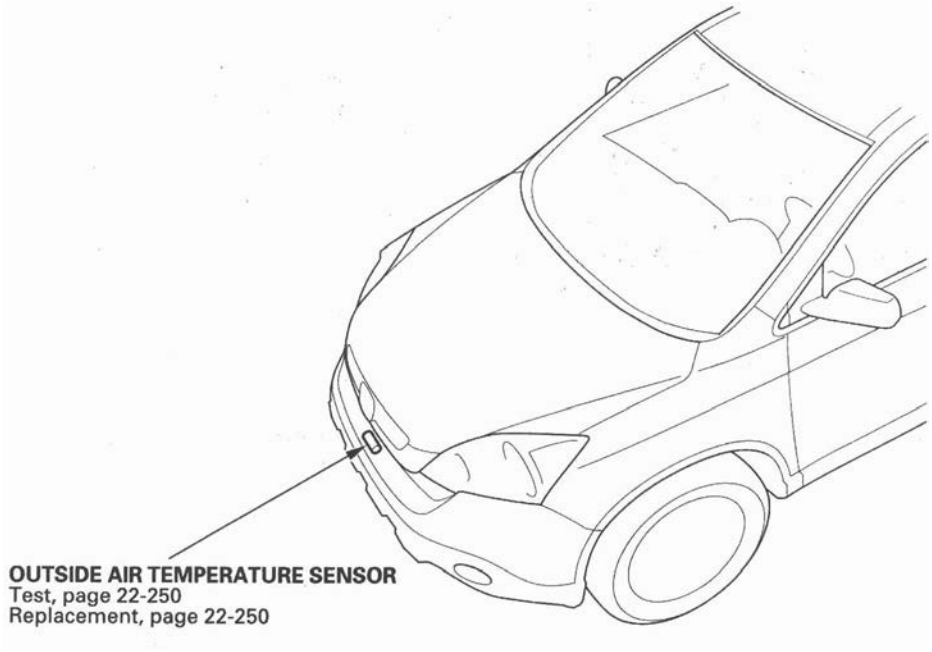

OUTSIDE AIR TEMPERATURE SENSOR
Test, page 22-250
Replacement, page 22-250

(cont'd)

Component Location Index (cont'd)

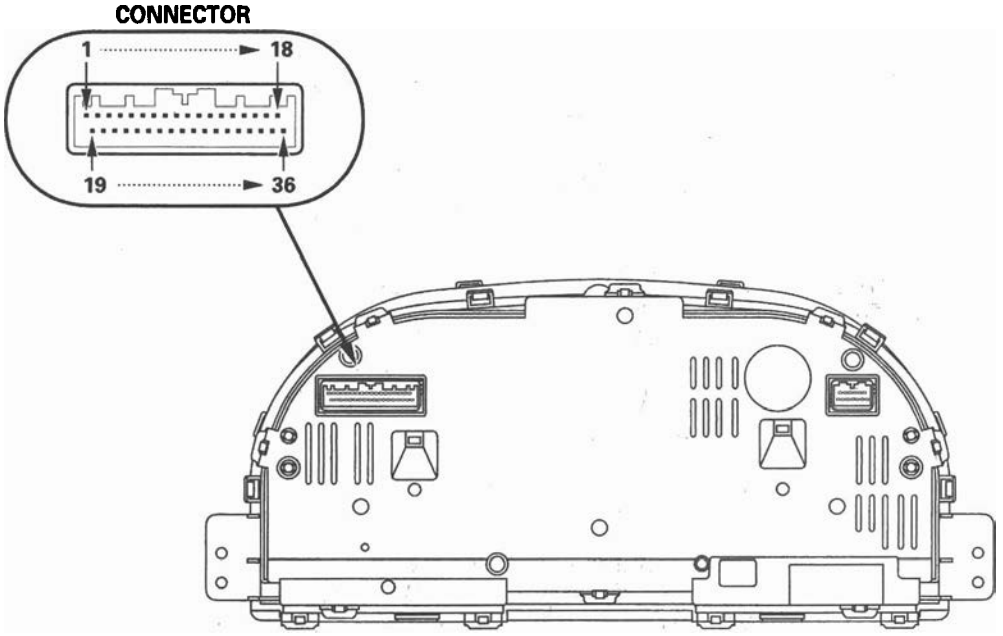

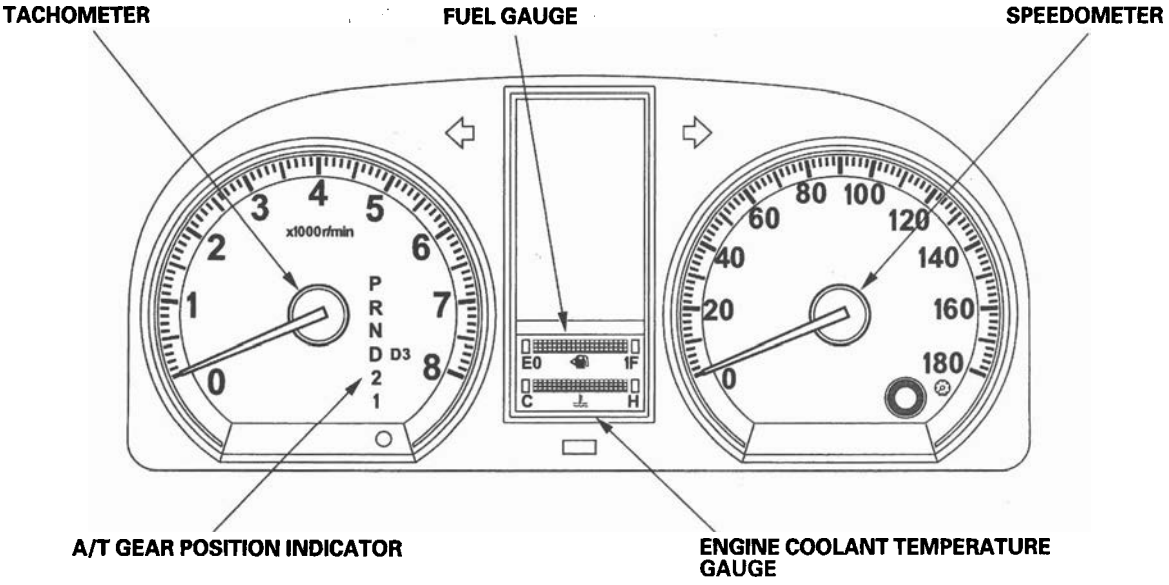

Self-diagnostic Function

Before checking the gauge system, refer to the B-CAN System Diagnosis Test Mode A (see page 22-92).

The gauge control module has the self-diagnostic functions shown, and also has the customizable reset function.

- The beeper drive circuit check.
- The indicator drive circuit check.
- The switch input test.
- The LCD segments check.
- The gauges drive circuit check (speedometer, tachometer, fuel gauge, coolant temperature gauge).
- The communication line check of the body-controller area network (B-CAN) communication line and the fast-controller area network (F-CAN) communication line.

NOTE:
Indicators are also controlled via the communication line.

Entering the self-diagnostic function with the HDS

Using the HDS, select Body Electrical, Gauges, then Function Test, and do the self-diagnostic function.

Entering the self-diagnostic function (manual method)

NOTE: This procedure takes precise timimg. It may take several tries to enter the self-diagnosis mode.

Before doing the self-diagnostic function, check the No. 10 (7.5 A) fuse in the under-dash fuse/relay box and the No. 23 (10 A) fuse in the under-hood fuse/relay box.

1. Push and hold the SEL/RESET switch button.
2. Turn the headlights ON.
3. Turn the ignition switch ON (II).
4. Within 5 sec., turn the headlights OFF, then ON and OFF again.
5. Within 5 sec., release the SEL/RESET switch button, and then push and release the button three times repeatedly.

NOTE:
- While in the self-diagnostic mode, the dash lights brightness controller operates normally.
- While in the self-diagnostic mode, the SEL/RESET button is used to start the Beeper Drive Circuit Test and the Gauge Drive Circuit Check.

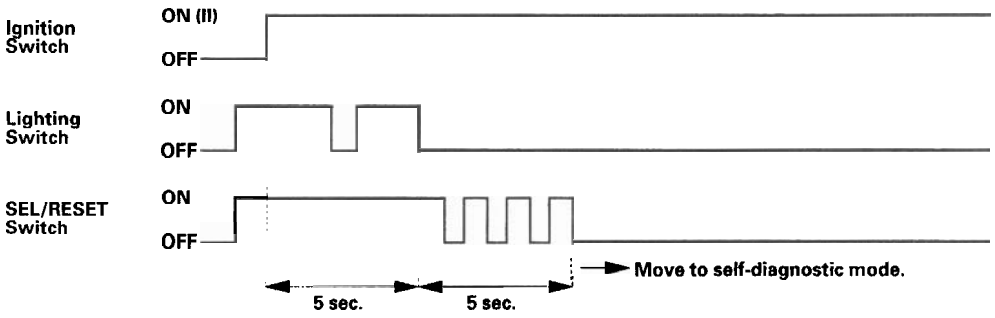

(cont'd)

Self-diagnostic Function (cont'd)

The Indicator Drive Circuit Check

When entering the self-diagnostic mode, the following indicators blink:
ABS indicator, A/T gear position indicator, brake system indicator, charging system indicator, cruise control indicator, cruise indicator, door indicator, DRL indicator, high beam indicator, immobilizer indicator, lights-on indicator, low tire pressure indicator, low fuel indicator, malfunction indicator lamp (MIL), maintenance required indicator, oil pressure indicator, seat belt indicator, security indicator, side airbag cutoff indicator, SRS indicator, tailgate indicator, TPMS indicator, VSA indicator, VSA activation indicator, and washer fluid level indicator (Canada models).

Switch Input Check

At the initial stage of the self-diagnostic function, the beep sounds intermittently, the beeper sounds continuously when any of the following switch inputs are switched from OFF to ON:
Cruise control main, SET, RESUME, CANCEL switches, SEL/RESET switch, parking brake switch, and VSA OFF switch.
The illumination volume (+) and (−) switch (dash lights brightness controller) can be tested by turning on the headlights and verifying that the dash lights brightness changes as you turn the switch from full dim to full bright.

The Beeper Drive Circuit Check

When entering the self-diagnostic mode, the beeper sounds five times.

The LCD Segment Check

When entering the self-diagnostic mode, all the segments blink five times. After that, all segments come on.

The Gauge Drive Circuit Check

When entering the self-diagnostic mode, the speedometer and tachometer needles sweep from the minimum position to maximum position, then returns to the minimum position.

NOTE:
After the beeper stops sounding and the gauge needle returns to the minimum position, pushing the SEL/RESET switch starts the Beeper Drive Circuit Check (one beep) and the Gauge Drive Circuit Check again.
The check cannot be started again until the gauge needle returns to the minimum position.

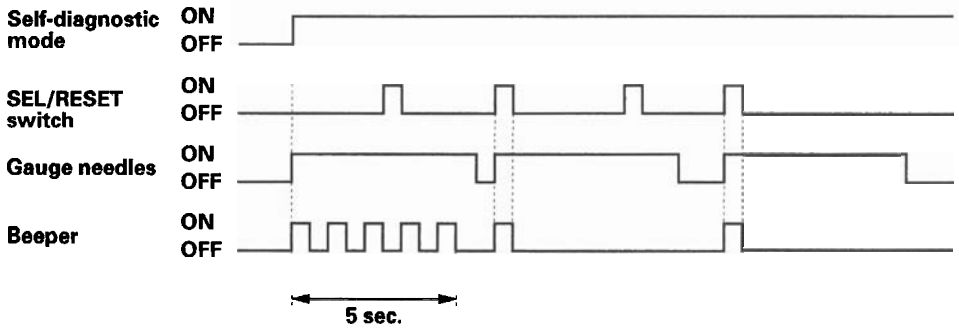



The needle sweeps from the minimum position to the maximum position, then returns to the minimum position.

If the needle fails to sweep, or the beeper does not sound, replace the gauge control module.

The Communication Line Check

While in the self-diagnostic mode, the Communication Line Check starts after the LCD Segments Check.
If all segments come on, the communication line is OK. If faulty, the word "Error" will be indicated on the odometer display followed by number(s).

Error Code List

Error code	Type of communication line(s) error
Error 1	F-CAN communication
Error 2	B-CAN communication
Error 12	F-CAN and B-CAN communication

Example Indication

Normal (all segments come on.):



Faulty (Error 1):



- If the word "Error 1" is indicated, there is a malfunction in the communication line between the gauge control module and the fast-controller area network (F-CAN). Check for DTCs in the PCM and troubleshoot any DTCs found. If no DTCs are found, go to indicated troubleshooting.
- If the word "Error 2" is indicated, there is a malfunction in the communication line between the gauge control module and the body-controller area network (B-CAN). Go to indicated troubleshooting.

If any F-CAN or B-CAN communication line errors are found, go to DTC check using HDS.

Ending the self-diagnostic function

Turn the ignition switch OFF.

NOTE: If the vehicle speed exceeds 1.2 mph (2 km/h), the self-diagnostic function ends.

Circuit Diagram

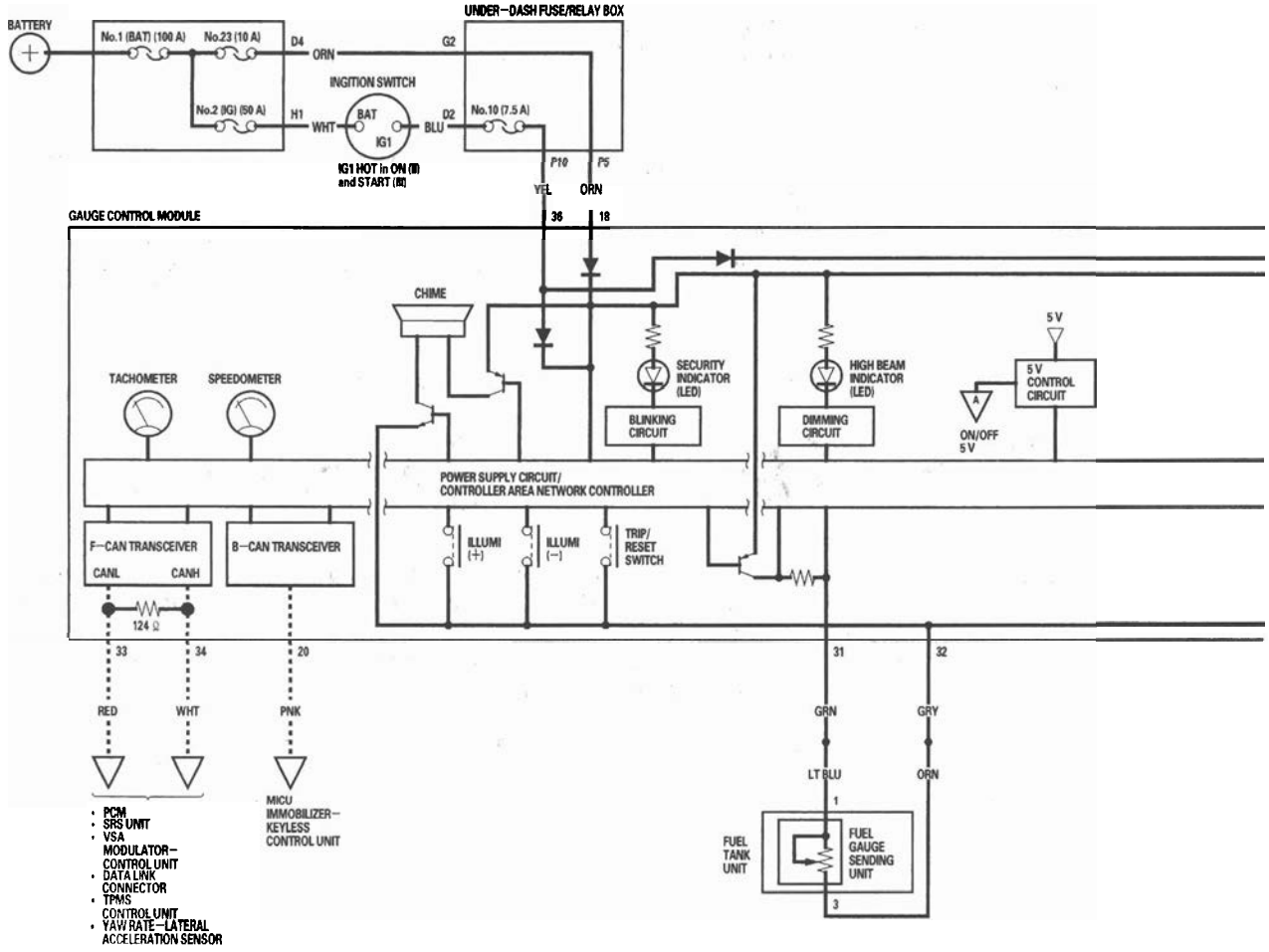

: CAN line

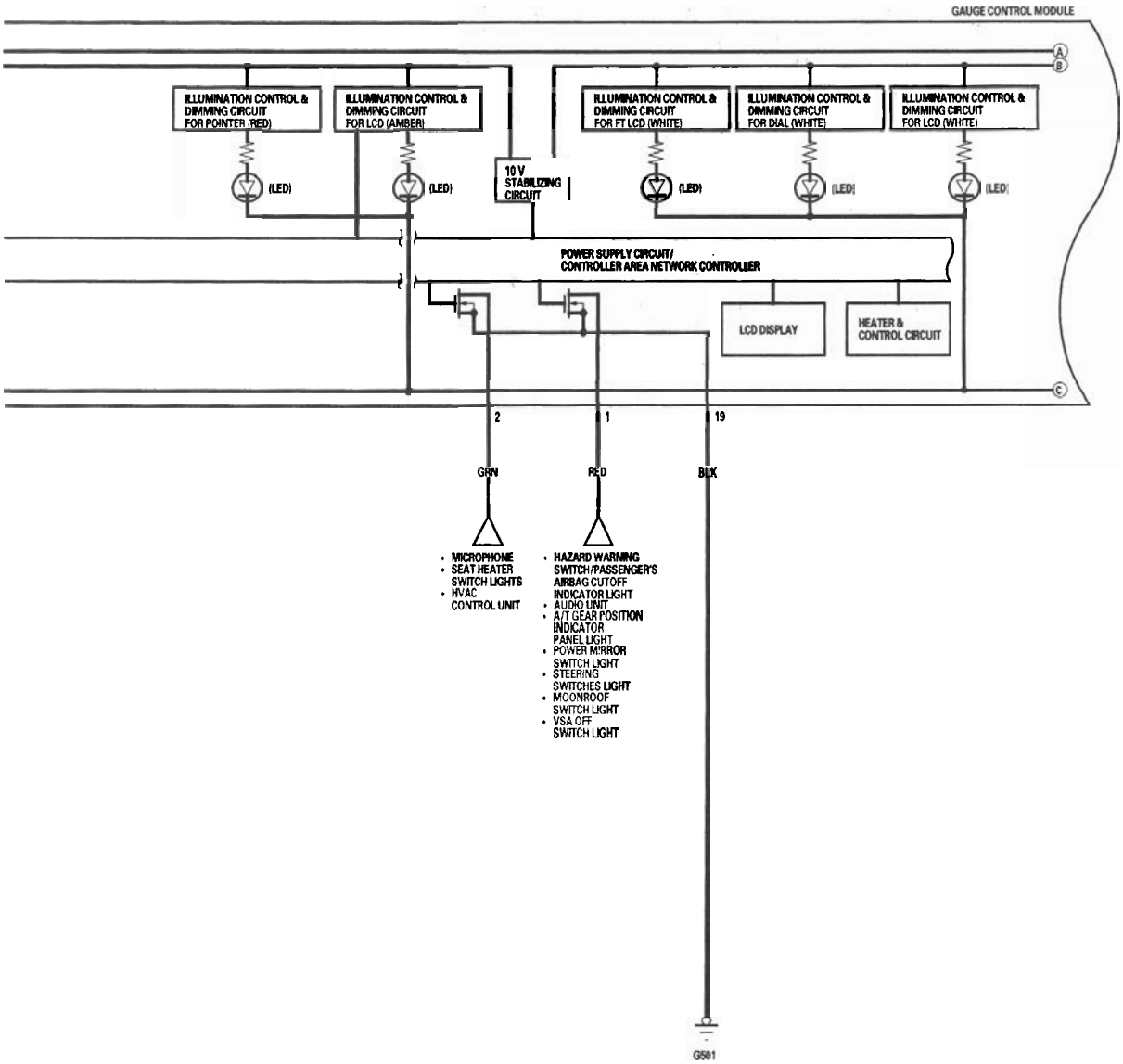

(cont'd)

Circuit Diagram (cont'd)

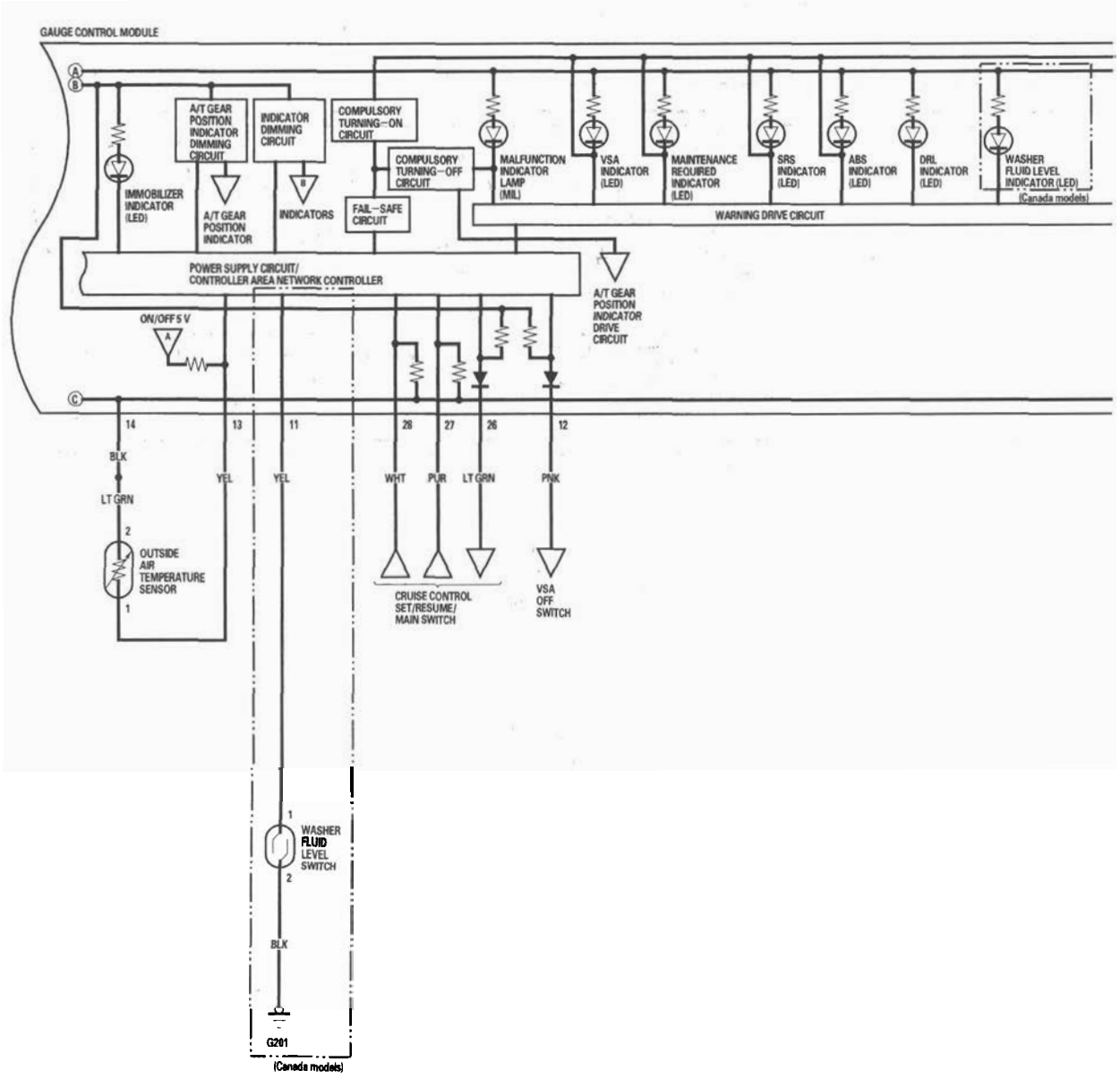

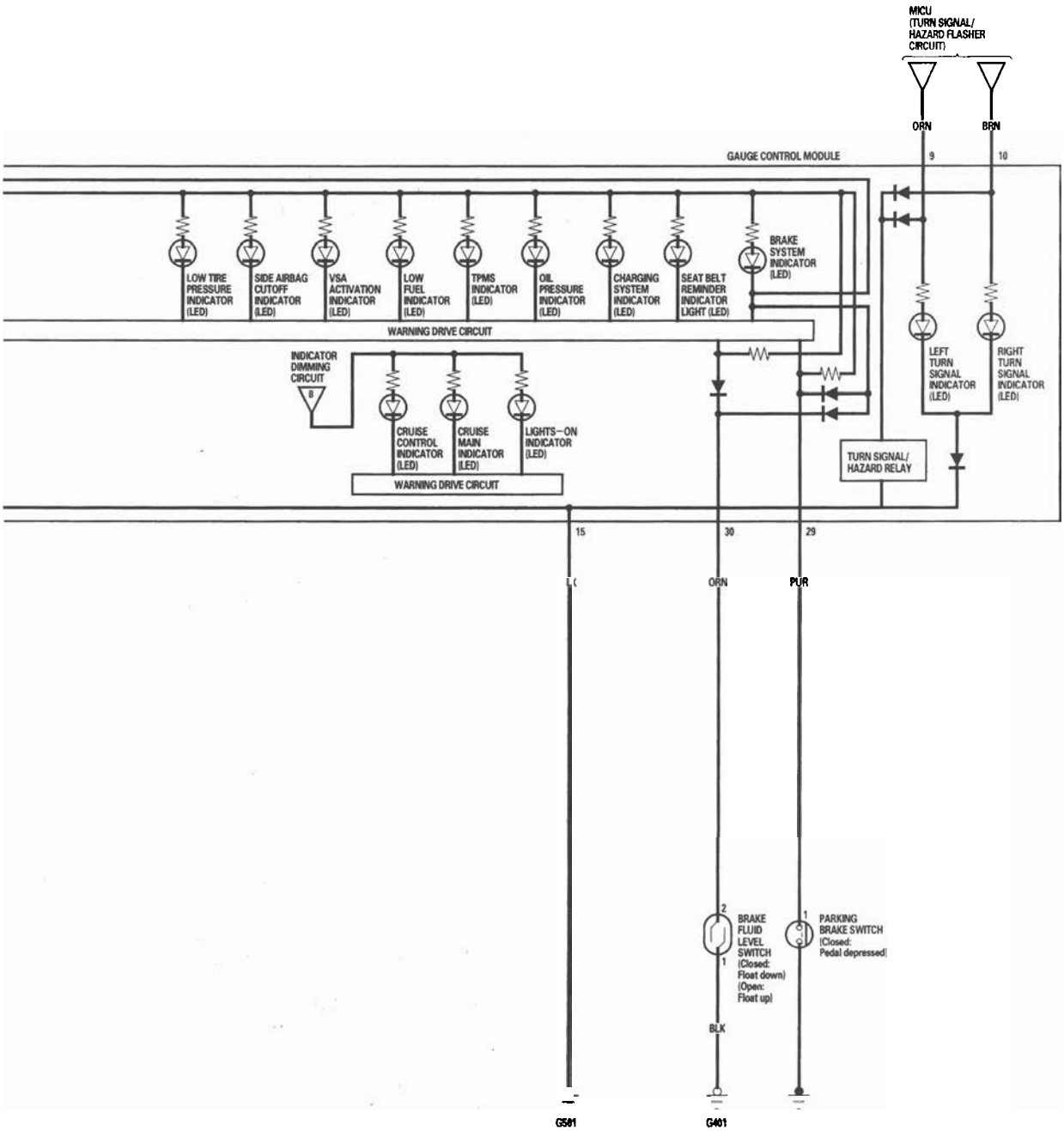
MICU
(TURN SIGNAL/
HAZARD FLASHER
CIRCUIT)
ORN
BRN
GAUGE CONTROL MODULE
9
10
LOW TIRE PRESSURE INDICATOR (LED)
SIDE AIRBAG CUTOFF INDICATOR (LED)
VSA ACTIVATION INDICATOR (LED)
LOW FUEL INDICATOR (LED)
TPMS INDICATOR (LED)
OIL PRESSURE INDICATOR (LED)
CHARGING SYSTEM INDICATOR (LED)
SEAT BELT REMINDER INDICATOR LIGHT (LED)
BRAKE SYSTEM INDICATOR (LED)
WARNING DRIVE CIRCUIT
INDICATOR DIMMING CIRCUIT
B
CRUISE CONTROL INDICATOR (LED)
CRUISE MAIN INDICATOR (LED)
LIGHTS—ON INDICATOR (LED)
WARNING DRIVE CIRCUIT
LEFT TURN SIGNAL INDICATOR (LED)
RIGHT TURN SIGNAL INDICATOR (LED)
TURN SIGNAL/ HAZARD RELAY
15
30
29
ORN
PUR
2
1
BRAKE FLUID LEVEL SWITCH (Closed: Float down) (Open: Float up)
1
PARKING BRAKE SWITCH (Closed: Pedal depressed)
BLK
G501
G401

DTC Troubleshooting

DTC B1152: Gauge Control Module Internal Error (EEPROM)

1. Clear the DTCs with the HDS.
2. Turn the ignition switch OFF, and then back ON (II).
3. Wait for 6 seconds or more.
4. Check for DTCs with the HDS.

   Is DTC B1152 indicated?

   YES—Replace the gauge control module.■

   NO—Intermittent failure, the system is OK at this time. Check the battery condition (see page 22-65), and the charging system.■

DTC B1155: Gauge Control Module Lost Communication with the MICU (HLSW Message)

DTC B1156: Gauge Control Module Lost Communication with the MICU (WIPSW Message)

DTC B1157: Gauge Control Module Lost Communication with the MICU (MICU Message)

DTC B1159: Gauge Control Module Lost Communication with the MICU (DOORSW Message)

DTC B1160: Gauge Control Module Lost Communication with the MICU (DRLOCKSW Message)

DTC B1188: Gauge Control Module Lost Communication with the MICU (RM Message)

NOTE: If you are troubleshooting multipule DTCs, be sure to follow the instructions in B-CAN System Diagnosis Test Mode A (see page 22-92).

1. Clear the DTCs with the HDS.
2. Turn the ignition switch OFF, and then back ON (II).
3. Wait for 6 seconds or more.
4. Check for DTCs with the HDS.

   Is DTC B1155, B1156, B1157, B1159, B1160, or B1188 indicated?

   YES—Go to step 5.

   NO—Intermittent failure, the system is OK at this time. Check for loose or poor connections between the gauge control module and the MICU.■
5. Check for DTCs with the HDS.

   Is DTC B1155, B1156, B1157, B1159, B1160, or B1188 indicated with DTCs B1905?

   YES—Faulty MICU; replace the under-dash fuse/relay box (see page 22-64).■

   NO—Replace the gauge control module.■

DTC B1168: Gauge Control Module Lost Communication with the PCM (ENG Message)

DTC B1169: Gauge Control Module Lost Communication with the PCM (A/T Messages)

NOTE: If you are troubleshooting multipule DTCs, be sure to follow the instructions in B-CAN System Diagnosis Test Mode A (see page 22-92).

1. Clear the DTCs with the HDS.
2. Turn the ignition switch OFF, and then back ON (II).
3. Wait for 6 seconds or more.
4. Check for DTCs with the HDS.

   Is DTC B1168 or B1169 indicated?

   YES—Go to step 5.

   NO—Intermittent failure, the system is OK at this time. Check for loose or poor connections. ■
5. Check for Fuel and Emission system DTCs with the HDS (see page 11-3).

   Is any DTCs indicated?

   YES—Go to the indicated DTCs, then recheck.

   NO—Go to step 6.
6. Turn the ignition switch OFF.
7. Disconnect the gauge control module 36P connector.
8. Jump the SCS with the HDS (see page 11-3).
9. Disconnect the PCM connector A (44P).
10. Connect the gauge control module 36P connector No. 33 and No. 34 terminals and body ground with jumper wires.

GAUGE CONTROL MODULE 36P CONNECTOR

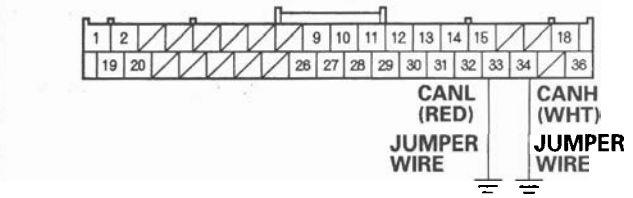

Wire side of female terminals

11. Check for continuity between the PCM connector A (44P) No. 36 and No. 37 terminals and body ground individually.

PCM CONNECTOR A (44P)

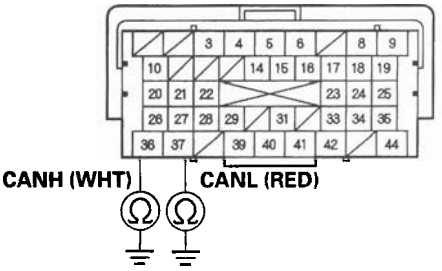

Terminal side of female terminals

Is there less than 3 Ω ?

YES—Update the PCM if it does not have the latest software (see page 11-7), or substitute a known-good PCM (see page 11-8), and recheck. If the indication goes away, replace the original PCM (see page 11-219). If the DTC is still present, replace the gauge control module (see page 22-248). ■

NO—Repair an open in the wire. ■

DTC Troubleshooting (cont'd)

DTC B1170: Gauge Control Module Lost Communication with the VSA Modulator-Control Unit (VSA message)

NOTE: If you are troubleshooting multiple DTCs, be sure to follow the instructions in B-CAN System Diagnosis Test Mode A (see page 22-92).

1. Clear the DTCs with the HDS.
2. Turn the ignition switch OFF, and then back ON (II).
3. Wait for 6 seconds or more.
4. Check for DTCs with the HDS.

   Is DTC B1170 indicated?

   YES—Go to step 5.

   NO—Intermittent failure, the system is OK at this time. Check for loose or poor connections between the gauge control module and the VSA modulator-control unit. ■
5. Check for VSA system DTCs with the HDS.

   Is any DTCs indicated?

   YES—Go to the indicated DTCs, then recheck.

   NO—Go to step 6.
6. Turn the ignition switch OFF.
7. Disconnect the gauge control module 36P connector.
8. Disconnect the VSA modulator-control unit 46P connector.
9. Connect the gauge control module 36P connector No. 33 and No. 34 terminals and body ground with jumper wires.

GAUGE CONTROL MODULE 36P CONNECTOR

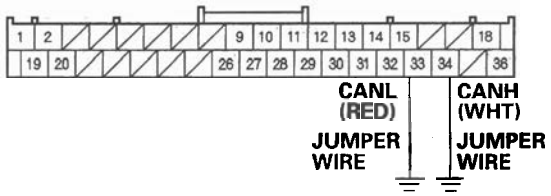

Wire side of female terminals

10. Check for continuity between the VSA modulator-control unit 46P connector No. 38 and No. 39 terminals and body ground individually.

VSA MODULATOR-CONTROL UNIT 46P CONNECTOR

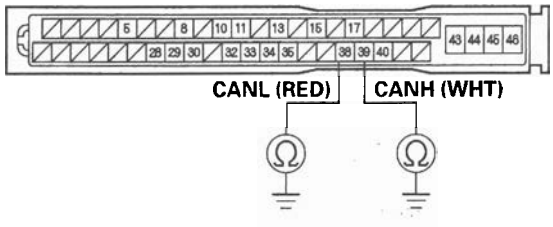

Wire side of female terminals

Is there less than 3 Ω ?

YES—Substitute a known-good VSA modulator-control unit, and recheck. If the indication goes away, replace the original VSA modulator-control unit. If the DTC is still present, replace the gauge control module (see page 22-248). ■

NO—Repair an open in the wire. ■

DTC B1173: Gauge Control Module Lost Communication with the TPMS Control Unit (TPMS message)

NOTE: If you are troubleshooting multiple DTCs, be sure to follow the instructions in B-CAN System Diagnosis Test Mode A (see page 22-92).

1. Clear the DTCs with the HDS.
2. Turn the ignition switch OFF, and then back ON (II).
3. Wait for 6 seconds or more.
4. Check for DTCs with the HDS.

   Is DTC B1173 indicated?

   YES—Go to step 5.

   NO—Intermittent failure, the system is OK at this time. Check for loose or poor connections. ■
5. Check for TPMS DTCs with the HDS.

   Is any DTCs indicated?

   YES—Go to the indicated DTCs, then recheck.

   NO—Go to step 6.
6. Turn the ignition switch OFF.
7. Disconnect the gauge control module 36P connector.
8. Disconnect the TPMS control unit 20P connector.
9. Check for continuity between the gauge control module 36P connector No. 33 and No. 34 terminals and the TPMS control unit 20P connector No. 1 and No. 11 terminals respectively.

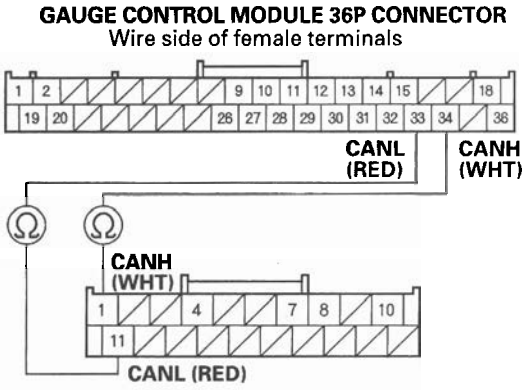

Is there continuity?

YES—Substitute a known-good TPMS control unit, and recheck. If the indication goes away, replace the original TPMS control unit. If the DTC is still present, replace the gauge control module (see page 22-248). ■

NO—Repair an open in the wire. ■

DTC Troubleshooting (cont'd)

DTC B1175: Fuel Level Sensor (Fuel Gauge Sending Unit) Circuit Open

NOTE: If you are troubleshooting multiple DTCs, be sure to follow the instructions in B-CAN System Diagnosis Test Mode A (see page 22-92).

1. Clear the DTCs with the HDS.
2. Turn the ignition switch OFF, and then back ON (II).
3. Wait for 30 seconds.
4. Check for DTCs with the HDS.

   Is DTC B1175 indicated?

   YES—Go to step 5.

   NO—Intermittent failure, the fuel level sensor circuit is OK at this time. Check for loose or poor connections. ■
5. Turn the ignition switch OFF.
6. Disconnect the fuel tank unit 4P connector and the gauge control module 36P connector.
7. Connect the fuel tank unit 4P connector No. 1 and No. 3 terminals and body ground with jumper wires.

FUEL TANK UNIT 4P CONNECTOR

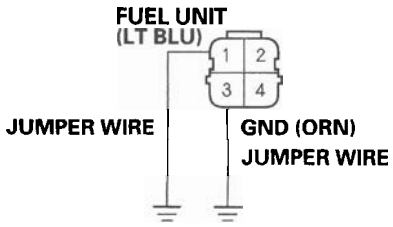

Wire side of female terminals

8. Check for continuity between gauge control module 36P connector No. 31 and No. 32 terminals and body ground individually.

GAUGE CONTROL MODULE 36P CONNECTOR

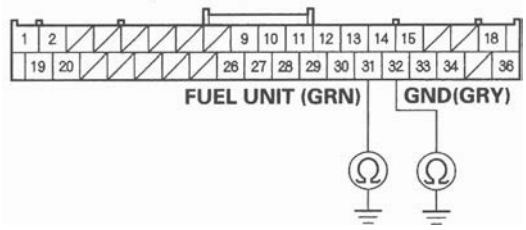

Wire side of female terminals

Is there continuity?

YES—Go to step 9.

NO—Repair an open in the wire between the gauge control module and the fuel tank unit. ■

9. Do the fuel gauge sending unit test (see page 11-335).

   Is the fuel gauge sending unit OK?

   YES—Replace the gauge control module. ■

   NO—Replace the fuel tank unit. ■

DTC B1176: Fuel Level Sensor (Fuel Gauge Sending Unit) Circuit Short

NOTE: If you are troubleshooting multiple DTCs, be sure to follow the instructions in B-CAN System Diagnosis Test Mode A (see page 22-92).

1. Clear the DTCs with the HDS.
2. Turn the ignition switch OFF, and then back ON (II).
3. Wait for 30 seconds.
4. Check for DTCs with the HDS.

   Is DTC B1176 indicated?

   YES—Go to step 5.

   NO—Intermittent failure, the fuel level sensor circuit is OK at this time. Check for worn/missing insulation or an internal short in the wire.■
5. Turn the ignition switch OFF.
6. Disconnect the fuel tank unit 4P connector.
7. Clear the DTCs with the HDS.
8. Turn the ignition switch OFF, and then back ON (II).
9. Wait for 30 seconds.
10. Check for DTCs with the HDS.

    Is DTC B1176 indicated?

    YES—Go to step 11.

    NO—Replace the fuel gauge sending unit (see page 11-332).■
11. Disconnect the gauge control module 36P connector.
12. Check for continuity between the gauge control module 36P connector No. 31 terminal and body ground.

GAUGE CONTROL MODULE 36P CONNECTOR

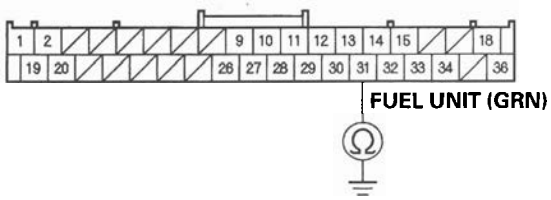

Wire side of female terminals

Is there continuity?

YES—Repair a short in the wire between the gauge control module and the fuel tank unit.■

NO—Replace the gauge control module.■

DTC Troubleshooting (cont'd)

DTC B1177: Battery Voltage Abnormal

NOTE: If you are troubleshooting multiple DTCs, be sure to follow the instructions in B-CAN System Diagnosis Test Mode A (see page 22-92).

1. Clear the DTCs with the HDS.
2. Turn the ignition switch OFF, and then back ON (II).
3. Check for DTCs with the HDS.

   Is DTC B1177 indicated?

   YES—Go to step 8.

   NO—Go to step 4.
4. Clear the DTCs with the HDS.
5. Turn the ignition switch OFF, and then back ON (II).
6. Crank the engine.
7. Check for DTCs with the HDS.

   Is DTC B1177 indicated?

   YES—Go to step 8.

   NO—Intermittent failure, the gauge control module and power supply voltage (IG1) that is supplied to the gauge control module are OK at this time. The battery may have been discharged, and recovered.■
8. Check the battery (see page 22-65) and the charging system.

   Is the battery condition normal and the charging system OK?

   YES—Go to step 9.

   NO—The battery needs a recharge or replacement, or the charging system needs to be repaired.■
9. Turn the ignition switch ON (II).
10. With the gauge control module 36P connector still connected, measure voltage between the body ground and the gauge control module 36P connector No. 36 terminal.

    Is there battery voltage?

    YES—Replace the gauge control module.■

    NO—Repair an open or high resistance in the wire between the ignition switch and the gauge control module.■

DTC B1178: F-CAN Communication Line Error

NOTE: If you are troubleshooting multiple DTCs, be sure to follow the instructions in B-CAN System Diagnosis Test Mode A (see page 22-92).

1. Clear the DTCs with the HDS.
2. Turn the ignition switch OFF, and then back ON (II).
3. Wait for 6 seconds or more.
4. Check for DTCs with the HDS.

   Is DTCs B1168, B1169, B1170, and/or B1187 indicated?

   YES—Go to the indicated DTCs troubleshooting. ■

   NO—Intermittent failure, the system is OK at this time. Check for open or short in the wire. ■

DTC Troubleshooting (cont'd)

DTC B1187: Gauge Control Module Lost Communication with the SRS Unit (SRS Message)

NOTE: If you are troubleshooting multiple DTCs, be sure to follow the instructions in B-CAN System Diagnosis Test Mode A (see page 22-92).

1. Clear the DTCs with the HDS.
2. Turn the ignition switch OFF, and then back ON (II).
3. Wait for 6 seconds or more.
4. Check for DTCs with the HDS.

   Is DTC B1187 indicated?

   YES—Go to step 5.

   NO—Intermittent failure, the system is OK at this time. Check for loose or poor connections between the gauge control module and the SRS unit. ■

5. Check for SRS DTCs with the HDS.

   Is any DTCs indicated?

   YES—Go to the indicated DTCs troubleshooting, then recheck.

   NO—Go to step 6.

6. Turn the ignition switch OFF.
7. Disconnect the gauge control module 36P connector.
8. Disconnect the SRS unit connector A (28P).
9. Check for continuity between the gauge control module 36P connector No. 33 and No. 34 terminals and the SRS unit connector A (28P) No. 12 and No. 11 terminals respectively.

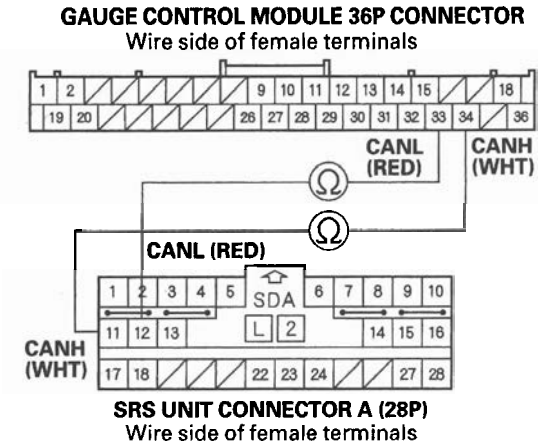

Is there continuity?

YES—Substitute a known-good SRS unit, and recheck. If the indication goes away, replace the original SRS unit. If the DTC is still present, replace the gauge control module (see page 22-248). ■

NO—Repair an open in the wire. ■

Gauge Control Module Input Test

NOTE: Before testing, do the gauge control module self-diagnosis procedure, and make sure the B-CAN communication line is OK.

1. Turn the ignition switch OFF.

2. Remove the gauge control module, and disconnect the 36P connector from it (see page 22-248).

GAUGE CONTROL MODULE 36P CONNECTOR

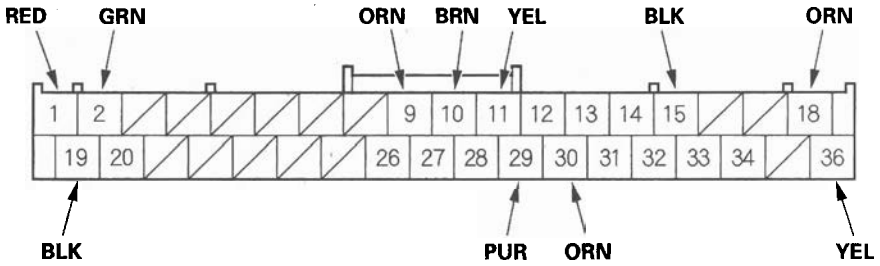

Wire side of female terminals

3. Inspect the connector and socket terminals to be sure they are all making good contact.

   - If the terminals are bent, loose or corroded, repair them as necessary, and recheck the system.
   - If the terminals are OK, go to step 4.

4. With the connector still disconnected, make these input tests at the connector.

   - If any test indicates a problem, find and correct the cause, then recheck the system.
   - If all the input tests prove OK, go to step 5.

Cavity	Wire	Test condition	Test: Desired result	Possible cause if result is not obtained
1	RED	Combination light switch ON	Attach to ground: The illumination of the dash lights, audio unit, and moonroof switch light should come on full.	• Faulty LEDs and bulbs • An open in the wire
2	GRN	Combination light switch ON	Attach to ground: The illumination of the seat heater switch lights and HVAC control unit should come on full bright.	• Faulty LEDs and bulbs • An open in the wire
9	ORN	Ignition switch ON (II), turn signal switch in LEFT	Check for voltage to ground: There should be battery voltage when the lights are flashing.	• Faulty MICU • Faulty combination light switch • An open in the wire
10	BRN	Ignition switch ON (II), turn signal switch in RIGHT	Check for voltage to ground: There should be battery voltage when the lights are flashing.	• Faulty MICU • Faulty combination light switch • An open in the wire

(cont'd)

Gauge Control Module Input Test (cont'd)

5. Reconnect the connector to the gauge control module, and make the input tests at the connector.

- If any test indicates a problem, find and correct the cause, then recheck the system.
- If the input test proves OK, the gauge control module must be faulty; replace it.

Cavity	Wire	Test condition	Test: Desired result	Possible cause if result is not obtained
15	BLK	Under all conditions	Check for voltage to ground: There should be less than 0.5 V.	• Poor ground (G501) • An open in the wire
19	BLK	Under all conditions	Check for voltage to ground: There should be less than 0.5 V.	• Poor ground (G501) • An open in the wire
36	YEL	Ignition switch ON (II)	Check for voltage to ground: There should be battery voltage.	• Blown No. 10 (7.5 A) fuse in the under-dash fuse/relay box • An open in the wire
18	ORN	Under all conditions	Check for voltage to ground: There should be battery voltage.	• Blown No. 23 (10 A) fuse in the under-hood fuse/relay box • An open in the wire
11	YEL	Ignition switch ON (II), washer fluid is half or more in the washer reservoir	Check for voltage to ground: There should be less than 1 V.	• Poor ground (G201) • Faulty washer fluid level switch • An open in the wire
		Ignition switch ON (II), washer fluid is empty in the washer reservoir	Check for voltage to ground: There should be 5 V or more.	• Faulty washer fluid level switch • A short to ground in the wire
30	ORN	Ignition switch ON (II), brake fluid is full level in the reservoir	Check for voltage to ground: There should be 5 V or more.	• Faulty brake fluid level switch • A short to ground in the wire
		Ignition switch ON (II), brake fluid is lower level in the reservoir	Check for voltage to ground: There should be less than 1 V.	• Poor ground (G401) • Faulty brake fluid level switch • An open in the wire
29	PUR	Ignition switch ON (II), parking brake pedal depressed	Check for voltage to ground: There should be less than 1 V.	• Faulty parking brake switch • An open in the wire
		Ignition switch ON (II), parking brake pedal released	Check for voltage to ground: There should be 5 V more.	• Faulty parking brake switch • A short to ground in the wire

Rewriting the ODO Data and Transferring Smart Maintenance on a New Gauge Control Module

NOTE:
- Obtain a new gauge control module before starting the rewriting process.
- Rewriting is not possible on a gauge control module that will not communicate with the HDS.
- Make sure that the HDS shows the correct VIN for the vehicle you are working on.
- Once you have started this procedure, you must complete it before removing the HDS from the DLC.
- Connect a battery jumper box (not a battery charger) to insure that correct battery voltage will be maintained.

1. Before replacing the gauge control module, connect the HDS.
2. Select GAUGES from the BODY ELECTRICAL system select menu with the HDS.
3. Select "Gauge Control Module Replacement (ODO Rewrite)" from the ADJUSTMENT menu, and follow the instructions on the display to retrieve the ODO value and the Smart Maintenance Information.
4. Replace the gauge control module.
5. Follow the instructions on the display to write the new ODO value and Smart Maintenance to the new gauge control module. If the data transfer fails, refer to the instructions below to release the locked ODO value.

Release Locked odometer mileage to the original gauge control module.

If, after you attempt to transfer mileage, the odometer display has dashes (———), is garbled, or shows an incorrect value, the original gauge control module needs to be unlocked and restored to its original state:

1. Confirm that you have the latest HDS version of software.
2. Make sure that the HDS shows the correct VIN for the vehicle you are working on.
3. With the ignition switch OFF, reconnect the original gauge control module.
4. Completely re-boot the HDS.
5. Clear any stored DTCs.
6. Navigate to Body Electric/Gauges/Adjustment/ Instrument Panel Replacement.
7. Select "3. Releasing Locked ODO Value."
8. Follow the prompts and the Odometer mileage will be restored.
9. Start over and make sure the screen prompts are followed.

Gauge Control Module Replacement

1. Remove the instrument panel (see page 20-96).
2. Remove the three screws from the gauge control module (A).

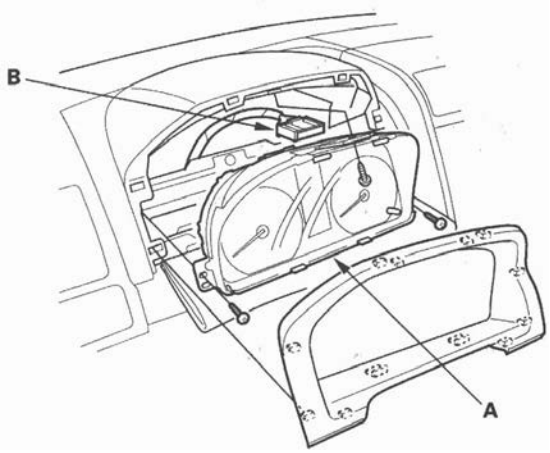

3. Disconnect the 36P connector (B) from the gauge control module.
4. Install the gauge in the reverse order of removal.

Outside Air Temperature Indicator Calibration

Description

The outside temperature sensor is located behind the center of the front bumper. The gauge control module uses measurements from this sensor to display the outside air temperature.
Because of the location of the sensor, it may be affected by heat, reflection from the road, engine and radiator heat or hot exhaust from surrounding traffic.
These conditions can heat soak the outside air temperature sensor and cause inaccurate readings.
Logic has been written into the gauge control module to help prevent abnormal of fluctuating outside air temperature indicator readings.

Outside Air Temperature Indicator Logic

Initial outside air temperature indication after the ignition switch is turned ON (II).

- If the engine coolant temperature is 140 °F (60 °C) or higher when the ignition switch is turned ON (II), the outside air temperature will be indicated the last reading before the key was turned off regardless of the current temperature measured by the outside air temperature sensor.
- If the engine coolant temperature is 139 °F (59 °C) or lower when the ignition switch is turned ON (II), the current temperature measured by the outside air temperature sensor will be indicated.

Update to the outside air temperature indicator while driving

If the temperature measured by the outside air temperature sensor is greater than the temperature on the outside air temperature indicator, the outside temperature indicator will increase by 1 °F (1 °C) per minute after the vehicle speed is greater than 19 mph (30 km/h) for more than 1 minute and 30 seconds. It will continue to increase until the current outside air temperature is indicated. So, the first change to the outside air temperature indicator is 1 minute and 30 seconds after the vehicle speed is greater than 19 mph (30 km/h). If the vehicle speed drops below 19 mph (30 km/h), the indicator will not update again until the vehicle speed is increased to 19 mph (30 km/h) or more for more than 1 minute and 30 seconds again.

If the outside air temperature is less than 140 °F (60 °C), the temperature increases 1 °F (1 °C) every 2 seconds until the current outside air temperature.

If the outside air temperature is less than the indicated temperature, the temperature will decrease 1 °F (1 °C) every 2 seconds until the current outside air temperature is indicated regardless of vehicle speed.

Troubleshooting

If the indicator displays "———" for more than 2 seconds after selecting the outside air temperature display mode, check the climate control system or multiplex integrated control system for DTCs (see B-CAN System Diagnosis Test Mode A) (see page 22-92).

Calibration

The outside air temperature indicator's displayed temperature can be recalibrated ±5 °F or ±3 °C to meet the customer's expectations.

Calibrate the outside air temperature with the HDS.

Outside Air Temperature Sensor Test

1. Remove the outside air temperature sensor (see page 22-250).
2. Dip the sensor in ice water, and measure the resistance. Then pour warm water on the sensor, and check for a change in resistance.
3. Compare the resistance reading between the No. 1 and No. 2 terminals of the outside air temperature sensor with the specifications shown in the graph; the resistance should be within the specifications.

OUTSIDE AIR TEMPERATURE SENSOR

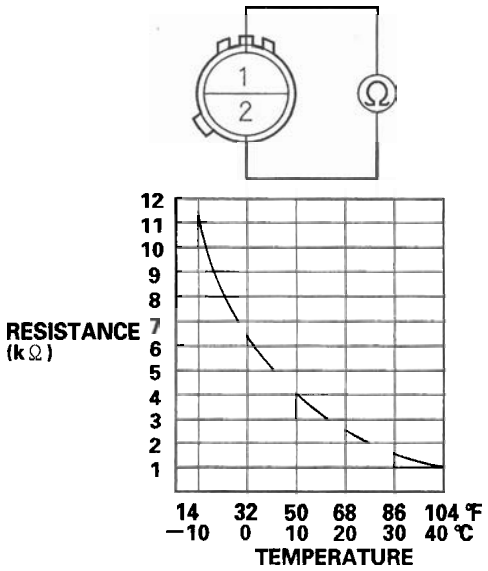

4. If the resistance is not as specified, replace the outside air temperature sensor (see page 22-250).

Outside Air Temperature Sensor Replacement

1. Disconnect the 2P connector (A) from the outside air temperature sensor (B).
2. Lift the tab (C) to release the lock, then remove the outside air temperature sensor from the front bumper.

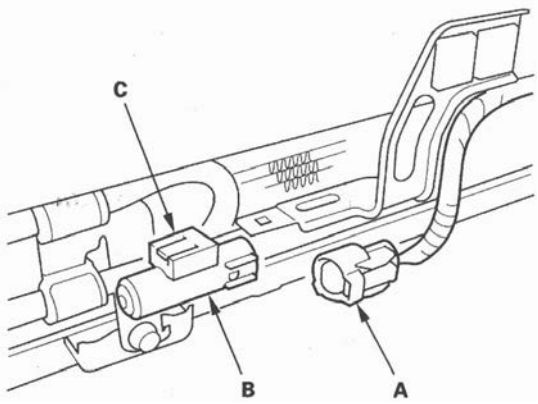

3. Install the sensor in the reverse order of removal.

Component Location Index

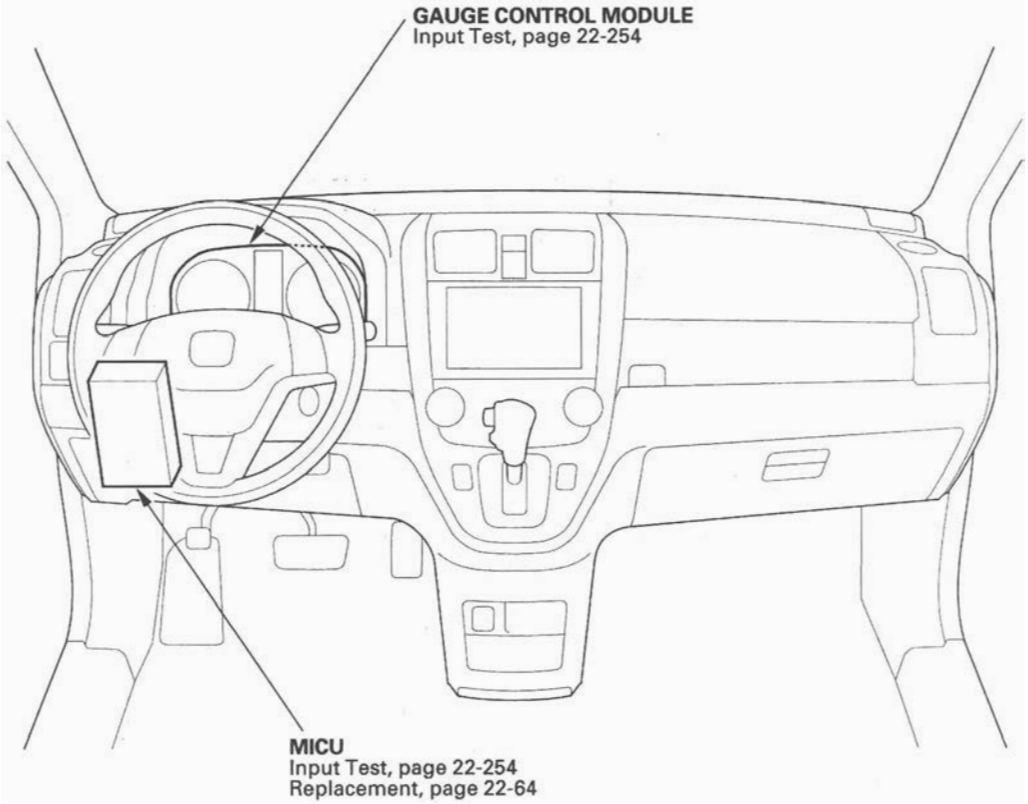

Circuit Diagram

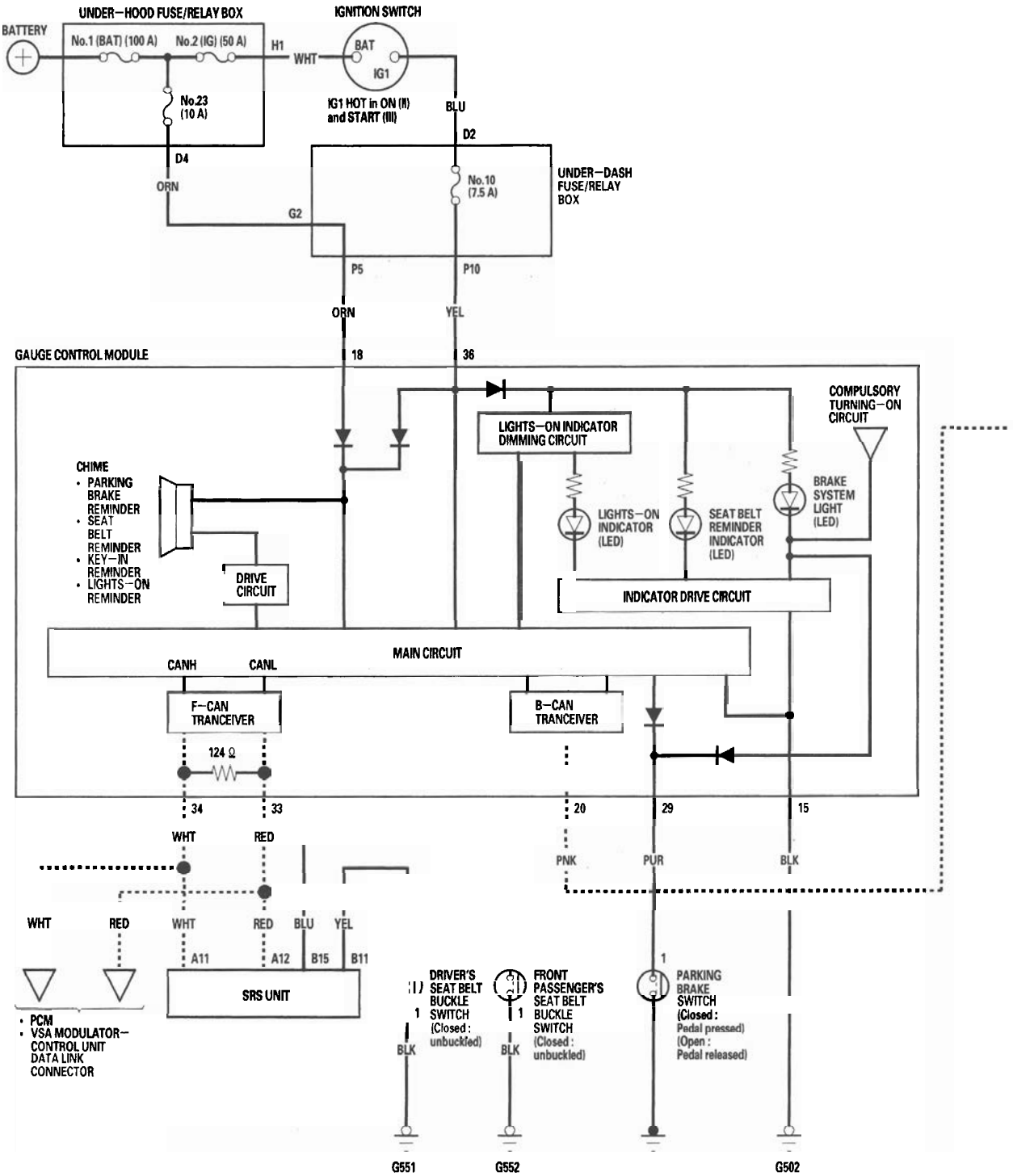

: CAN line

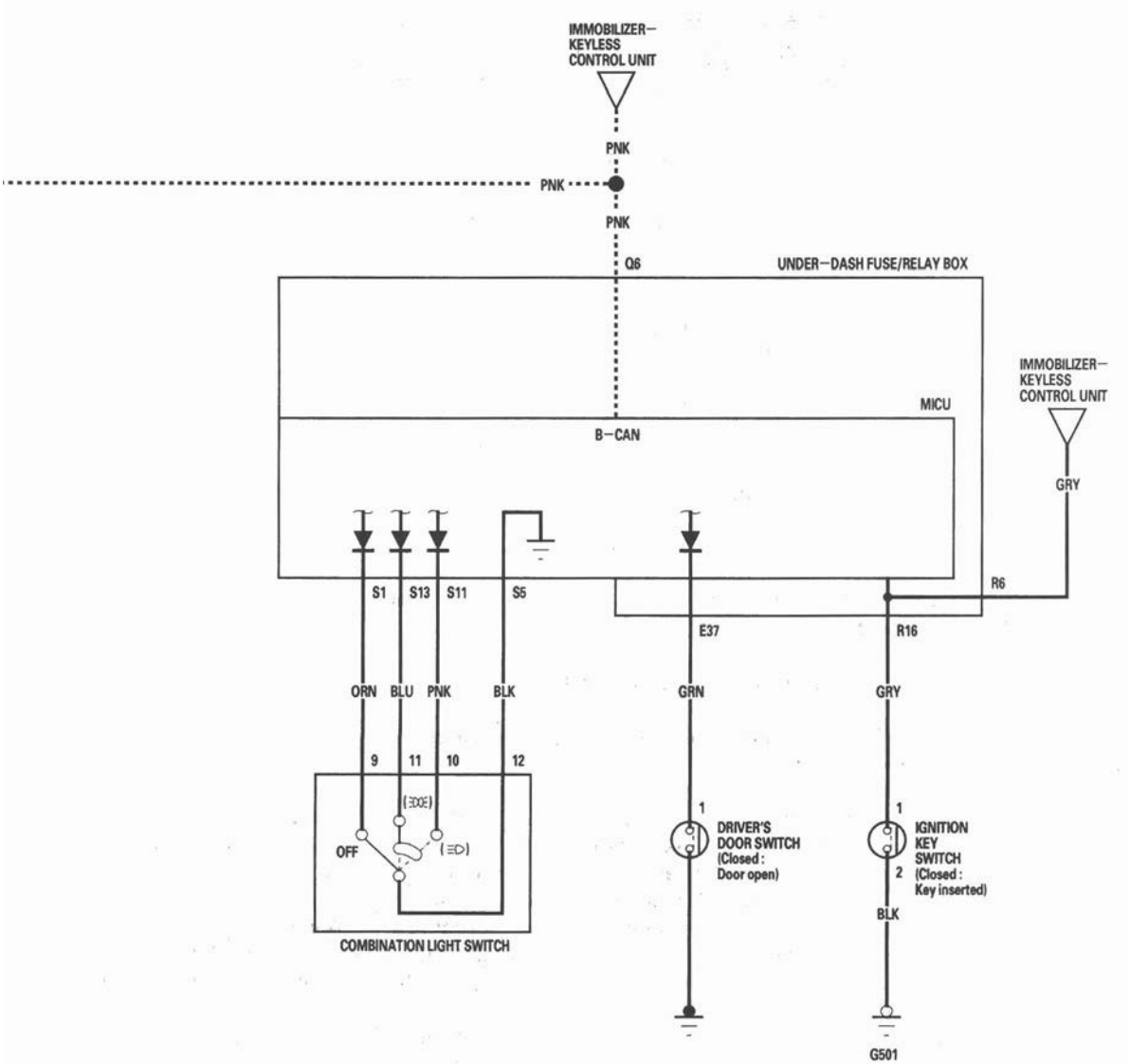
IMMOBILIZER–
KEYLESS
CONTROL UNIT
PNK
PNK
PNK
Q6
UNDER–DASH FUSE/RELAY BOX
IMMOBILIZER–
KEYLESS
CONTROL UNIT
MICU
B–CAN
GRY
R6
S1
S13
S11
S5
E37
R16
ORN
BLU
PNK
BLK
GRN
GRY
9
11
10
12
1
1
DRIVER'S
DOOR SWITCH
(Closed :
Door open)
IGNITION
KEY
SWITCH
(Closed :
Key inserted)
2
OFF
BLK
COMBINATION LIGHT SWITCH
G501

Control Unit Input Test

NOTE: Before testing, troubleshoot the B-CAN System Diagnosis Test Mode A (see page 22-92).

MICU

1. Turn the ignition switch OFF.
2. Remove the left kick panel (see page 20-67).
3. Disconnect the under-dash fuse/relay box connectors.

   NOTE: All connector views are wire side of female terminals.

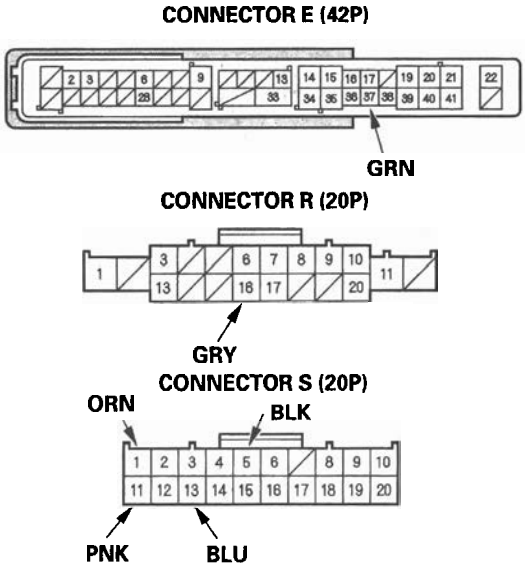

4. Inspect the connector and socket terminals to be sure they are all making good contact.
   - If the terminals are bent, loose or corroded, repair them as necessary, and recheck the system.
   - If the terminals are OK, go to step 5.
5. Reconnect the connectors, then make these input tests at the connector.
   - If any test indicates a problem, find and correct the cause, then recheck the system.
   - If all the input tests prove OK, go to step 6.

Cavity	Wire	Test condition	Test: Desired result	Possible cause if result is not obtained
E37	GRN	Driver's door open	Check for voltage to ground: There should be less than 1 V.	• Faulty driver's door switch • An open in the wire
		Driver's door closed	Check for voltage to ground: There should be 5 V or more.	• Faulty driver's door switch • A short to ground in the wire
R16	GRY	Ignition key inserted into the ignition switch	Check for voltage to ground: There should be less than 1 V.	• Poor ground (G501) • Faulty ignition key switch • An open in the wire
		Ignition switch OFF and ignition key removed from the ignition switch	Check for voltage to ground: There should be 5 V or more.	• Faulty ignition key switch • A short to ground in the wire

Cavity	Wire	Test condition	Test: Desired result	Possible cause if result is not obtained
S1 . S5	ORN . BLK	Combination light switch OFF	Check for voltage between S1 and S5 terminals: There should be less than 1 V.	• Faulty combination light switch • An open in the wire
		Combination light switch in any other position than OFF	Check for voltage between S1 and S5 terminals: There should be 5 V or more.	• Faulty combination light switch • A short to ground in the wire
S11 . S5	PNK . BLK	Combination light switch (Headlight position) ON	Check for voltage between S11 and S5 terminals: There should be less than 1 V.	• Faulty combination light switch • An open in the wire
		Combination light switch OFF	Check for voltage between S11 and S5 terminals: There should be 5 V or more.	• Faulty combination light switch • A short to ground in the wire
S13 . S5	BLU . BLK	Combination light switch (SMALL position) ON	Check for voltage between S13 and S5 terminals: There should be less than 1 V.	• Faulty combination light switch • An open in the wire
		Combination light switch OFF	Check for voltage between S13 and S5 terminals: There should be 5 V or more.	• Faulty combination light switch • A short to ground in the wire

Gauge Control Module

6. Turn the ignition switch OFF.
7. Remove the gauge control module (see page 22-248).
8. Disconnect the gauge control module 36P connector.

GAUGE CONTROL MODULE 36P CONNECTOR

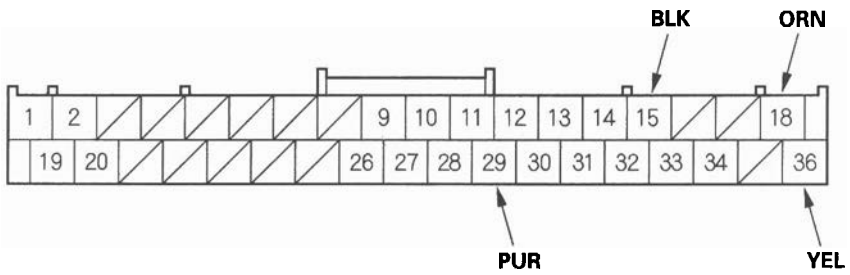

Wire side of female terminals

(cont'd)

Control Unit Input Test (cont'd)

9. Inspect the connector and socket terminals to be sure they are all making good contact.

   - If the terminals are bent, loose or corroded, repair them as necessary, and recheck the system.
   - If the terminals are OK, go to step 10.

10. With the connectors still disconnected, make these input tests at all connectors.

    - If any test indicates a problem, find and correct the cause, then recheck the system.
    - If the input tests prove OK, go to step 11.

Cavity	Wire	Test condition	Test: Desired result	Possible cause if result is not obtained
18	ORN	Under all conditions	Check for voltage to ground: There should be battery voltage.	• Blown No. 23 (10 A) fuse in the under-hood fuse/relay box • An open in the wire
36	YEL	Ignition switch ON (II)	Check for voltage to ground: There should be battery voltage.	• Blown No. 10 (7.5 A) fuse in the under-dash fuse/relay box • An open in the wire

11. Reconnect the gauge control module 36P connector, then make these input tests at the connector.

    - If any test indicates a problem, find and correct the cause, then recheck the system.
    - If all the input tests prove OK, go to step 12.

Cavity	Wire	Test condition	Test: Desired result	Possible cause if result is not obtained
15	BLK	Under all conditions	Check for voltage to ground: There should be less than 0.5 V.	• Poor ground (G502) • An open in the wire
29	PUR	Parking brake switch ON (pedal pressed)	Check for voltage to ground: There should be less than 1 V.	• Faulty parking brake switch • An open in the wire
		Parking brake switch OFF (pedal released)	Check for voltage to ground: There should be 5 V or more.	• Faulty parking brake switch • A short to ground in the wire

12. Do the Gauge Self-diagnostic Function Procedure (see page 22-229).

    - If the beeper sounds and the seat belt reminder light flashes, go to step 13.
    - If the beeper does not sound or the seat belt reminder light does not flash, replace the gauge control module.

13. Substitute a known-good gauge control module, and recheck the system.

    - If the symptom is gone, the gauge control module is faulty; replace it.
    - If the symptom is still present, the MICU is faulty; replace the under-dash fuse/relay box (see page 22-64).

Moonroof

Component Location Index

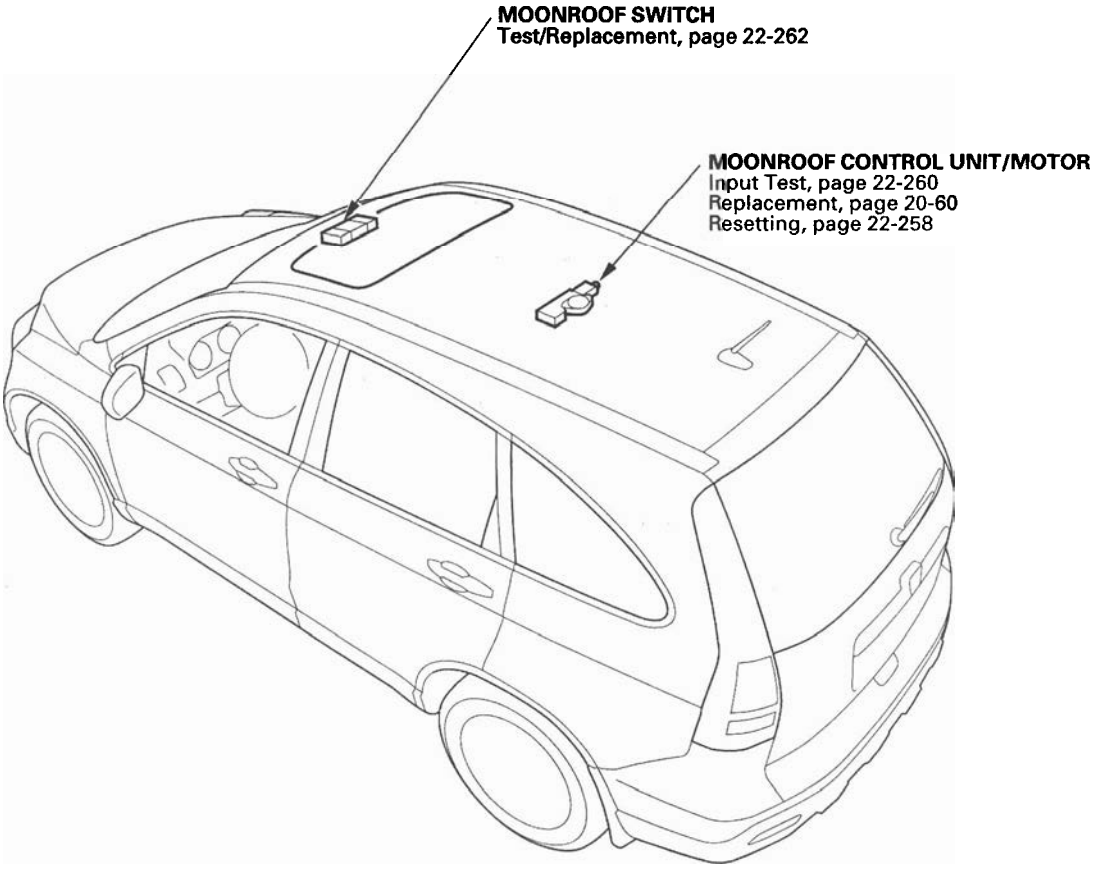

Resetting the Moonroof Control Unit

Resetting the moonroof is required when any of the following have occurred:

- The moonroof was moved manually while the battery was dead or disconnected.
- The moonroof motor was replaced with a new one.
- Any of components related to the moonroof were replaced.
  - Wind deflector
  - Moonroof glass
  - Moonroof seal
  - Moonroof glass bracket
  - Moonroof cables, etc.

To reset the moonroof control unit, do these steps:

1. Close the driver's door.
2. Turn the ignition switch OFF.
3. Press and hold the tilt switch, and turn the ignition switch ON (II).
4. Release the tilt switch, and turn the ignition switch OFF.
5. Repeat steps 2 and 3 four times.
6. Check if the AUTO OPEN and AUTO CLOSE functions still work. If they still work, the AUTO functions have not been cleared, go back to step 1. If the AUTO functions have been cleared, go to step 7.
7. Press and hold the moonroof open switch for 3 additional seconds after the moonroof is fully opened.
8. Press and hold the moonroof close switch for 3 additional seconds after the moonroof is fully closed (tilted).
9. Confirm that the moonroof control unit is reset by using the moonroof AUTO OPEN and AUTO CLOSE function.

Circuit Diagram

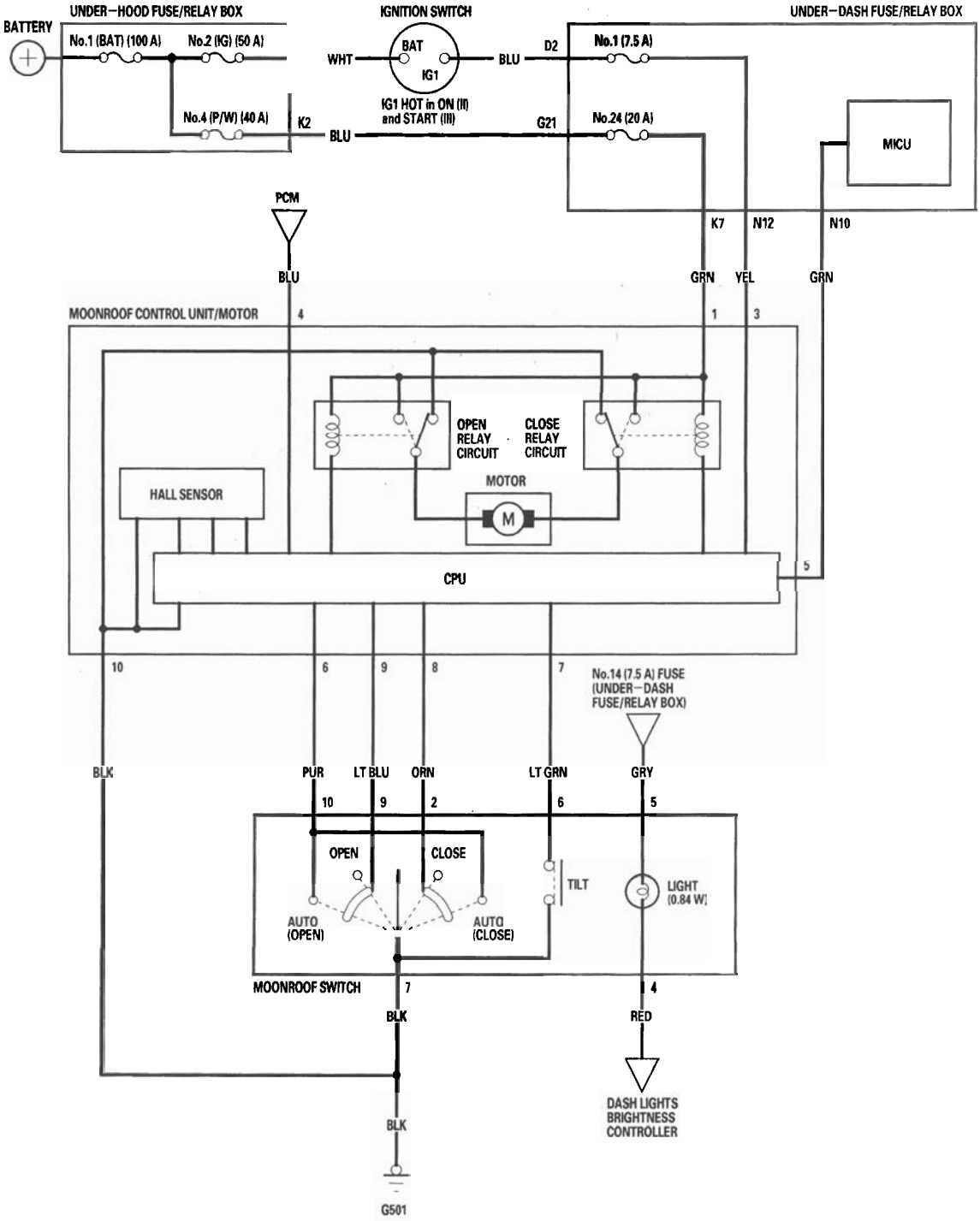

Moonroof Control Unit Input Test

NOTE: If the moonroof works OK manually, but will not work in AUTO, or reverses frequently (obstacle detection), do the moonroof calibration (see page 22-258) before proceeding with the input test.

1. Turn the ignition switch OFF.
2. Remove the headliner (see page 20-83).
3. Disconnect the 10P connector (A) from the moonroof control unit (B).

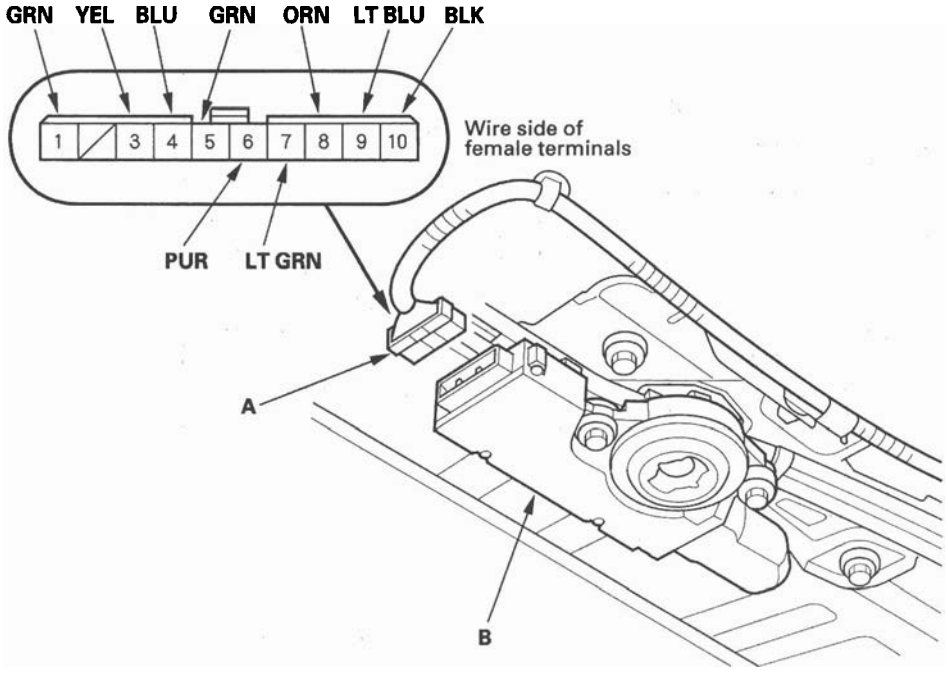

4. Inspect the connector and socket terminals to be sure they are all making good contact.
   - If the terminals are bent, loose or corroded, repair them as necessary, and recheck the system.
   - If the terminals look OK, go to step 5.

5. Reconnect the connector to the control unit, and make these input tests at the connector

   - If any test indicates a problem, find and correct the cause, then recheck the system.
   - If all the input tests prove OK, go to step 6.

Cavity	Wire	Test condition	Test: Desired result	Possible cause if result is not obtained
1	GRN	Under all conditions	Check for voltage to ground: There should be battery voltage.	• Blown No. 24 (20 A) fuse in the under-dash fuse/relay box • An open in the wire
3	YEL	Ignition switch ON (II)	Check for voltage to ground: There should be battery voltage.	• Blown No. 1 (7.5 A) fuse in the under-dash fuse/relay box • An open in the wire
10	BLK	Under all conditions	Check for voltage to ground: There should be less than 0.5 V.	• Poor ground (G501) • An open in the wire
6	PUR	Ignition switch ON (II), moonroof switch in AUTO OPEN or AUTO CLOSE position	Check for voltage to ground at the No. 3 and No. 6 terminals: There should be battery voltage.	• Faulty moonroof switch • An open in the wire
7	LT GRN	Ignition switch ON (II), moonroof switch in TILT position	Check for voltage to ground at the No. 3 and No. 7 terminals: There should be battery voltage.	• Faulty moonroof switch • An open in the wire
8	ORN	Ignition switch ON (II), moonroof switch in CLOSE position	Check for voltage to ground at the No. 3 and No. 8 terminals: There should be battery voltage.	• Faulty moonroof switch • An open in the wire
9	LT BLU	Ignition switch ON (II), moonroof switch in OPEN position	Check for voltage to ground at the No. 3 and No. 9 terminals: There should be battery voltage.	• Faulty moonroof switch • An open in the wire

6. Check the PCM DTCs. If there is no DTC, jump the SCS line with the HDS, then disconnect PCM connector A (44P) and the moonroof control unit/motor 10P connector.

7. Make these input tests at the connector.

   - If any test indicates a problem, find and correct the cause, then recheck the system.
   - If all the input tests prove OK, the control unit must be faulty; replace the moonroof control unit/motor.

Cavity	Wire	Test condition	Test: Desired result	Possible cause if result is not obtained
4	BLU	Under all conditions	Check for continuity between the No. 4 terminal and PCM connector A (44P) No. 29 terminal: There should be continuity.	An open in the wire
			Check for continuity between the No. 4 terminal and body ground: There should be no continuity.	A short to ground in the wire

Moonroof Switch Test/Replacement

1. Remove the front individual map lights (see page 22-177).
2. Disconnect the moonroof switch 10P connector (A) and map light switch 3P connector (B).

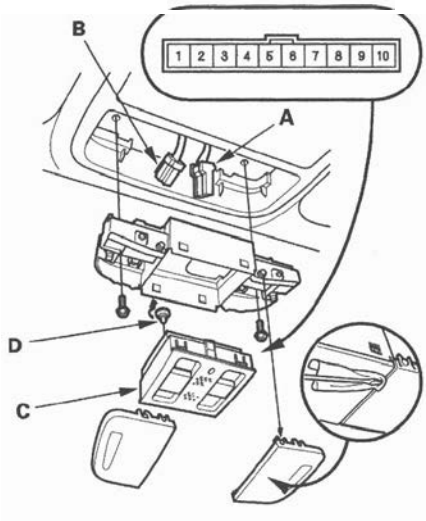

3. Remove the moonroof switch (C).
4. Check for continuity between the terminals in each switch position according to the table.

Position \ Terminal	7	2	6	9	10	4		5
OPEN	○			○				
CLOSE	○	○						
TILT	○		○			○	◎	○
CLOSE+AUTO	○	○			○			
OPEN+AUTO	○			○	○			

5. If the continuity is not as specified, replace the illumination bulb (D) or the switch.
6. Install the switch and light in the reverse order of removal.

Accessory Power Sockets

Component Location Index

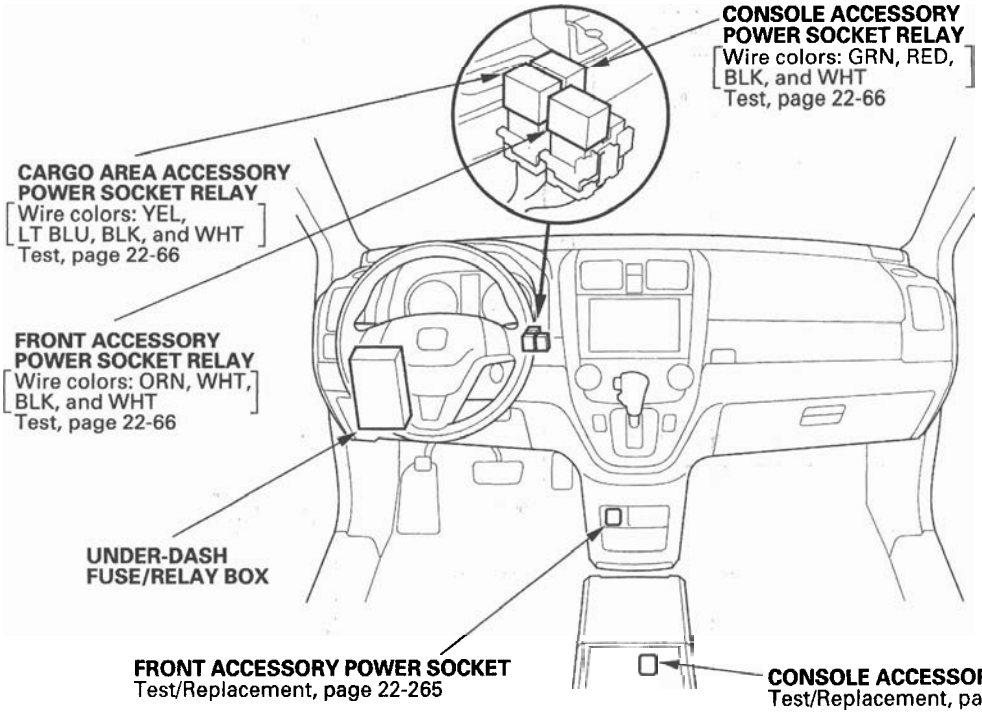

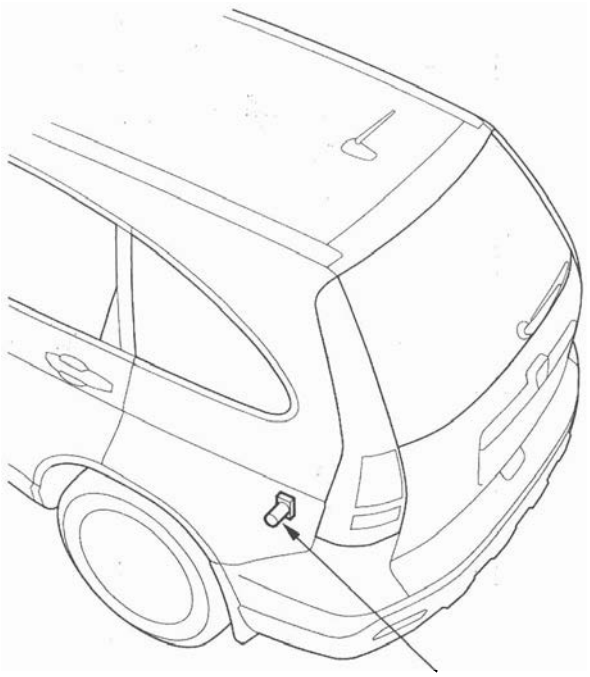

Accessory Power Sockets

Circuit Diagram

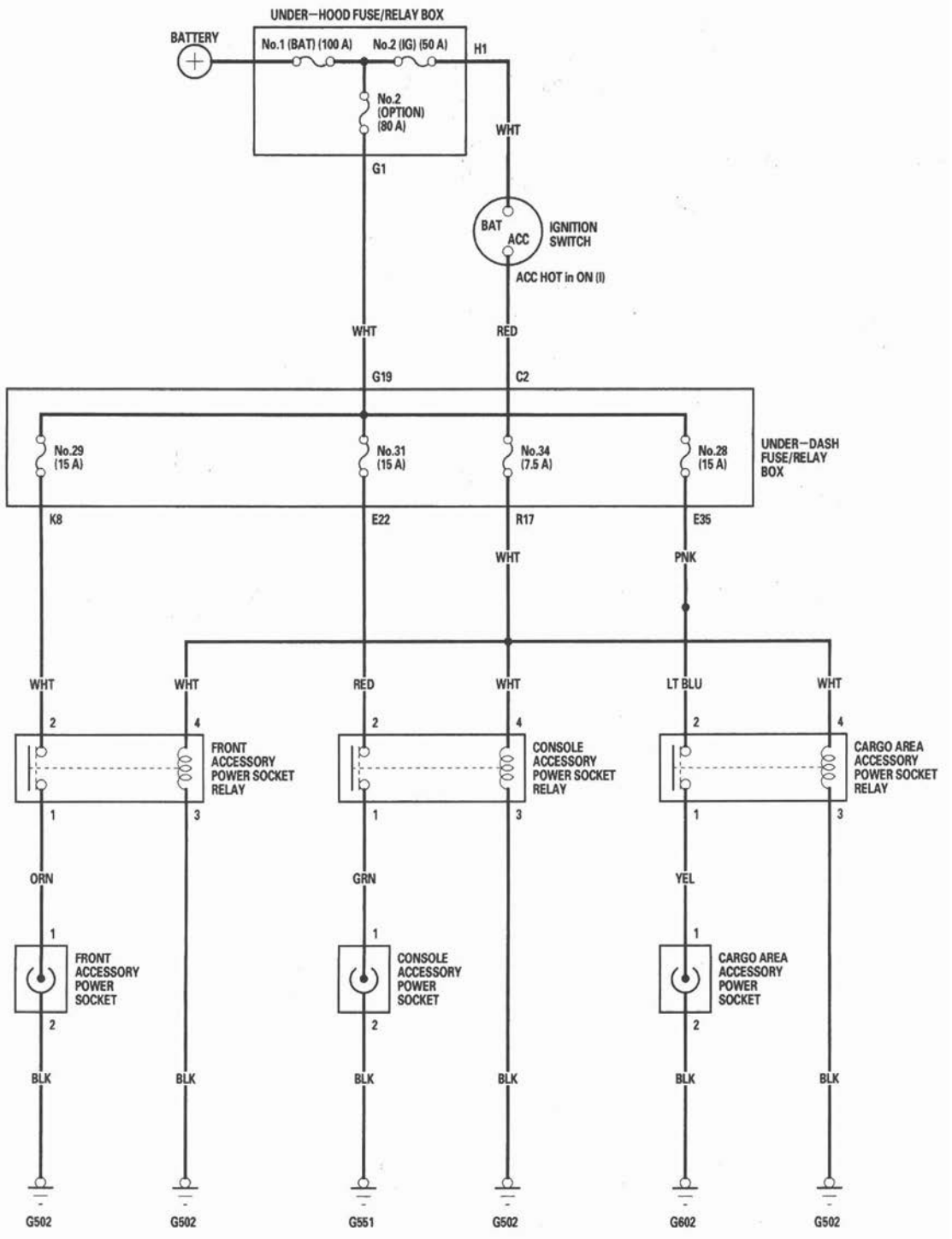

Front Accessory Power Socket Test/Replacement

NOTE: If all of the front, console, and cargo area accessory power sockets do not work, check the No. 34 (7.5 A) fuse in the under-dash fuse/relay box and ground (G502).

1. Remove the dashboard center lower cover (see page 20-95).

2. Disconnect the 2P connector (A) from the front accessory power socket (B).

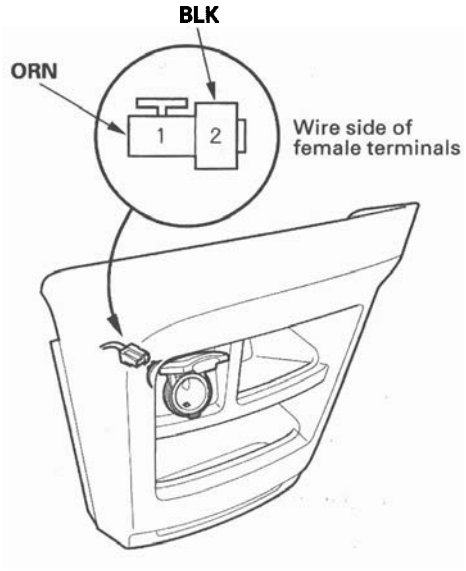

3. Inspect the connector terminals to be sure they are all making good contact.

   - If the terminals are bent, loose, or corroded, repair them as necessary and recheck the system.
   - If the terminals look OK, go to step 4.

4. Turn the ignition switch to ACC (I).

5. Measure voltage between the power accessory socket 2P connector No. 1 terminal and body ground. There should be battery voltage.

   - If there is battery voltage, go to step 6.
   - If there is no battery voltage, check for:
     – Blown No. 29 (15 A) fuse in the under-dash fuse/relay box.
     – Faulty front accessory power socket relay.
     – Poor ground (G502).
     – An open in the wire.

6. Check for continuity between the No. 2 terminal and body ground. There should be continuity.

   - If there is continuity, go to step 7.
   - If there is no continuity, check for:
     – Poor ground (G502).
     – An open in the wire.

7. Remove the socket (A).

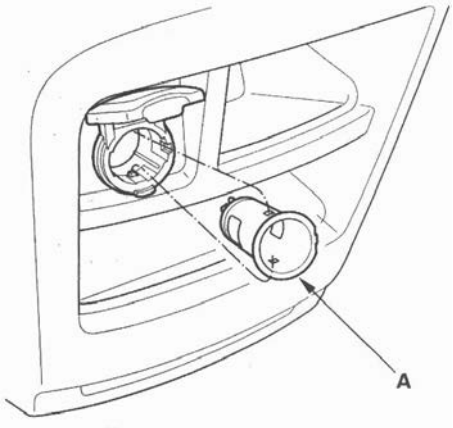

8. Remove the housing (A) from the panel.

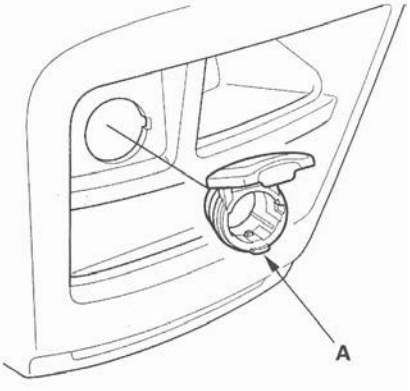

9. Install the power socket in the reverse order of removal.

Console Accessory Power Socket Test/Replacement

NOTE: If all of the front, console, and cargo area accessory power sockets do not work, check the No. 34 (7.5 A) fuse in the under-dash fuse/relay box and poor ground (G502).

1. For EX-L: Remove the center console (see page 20-89).
   For EX: Remove the center table AUX cover (A) from the table.

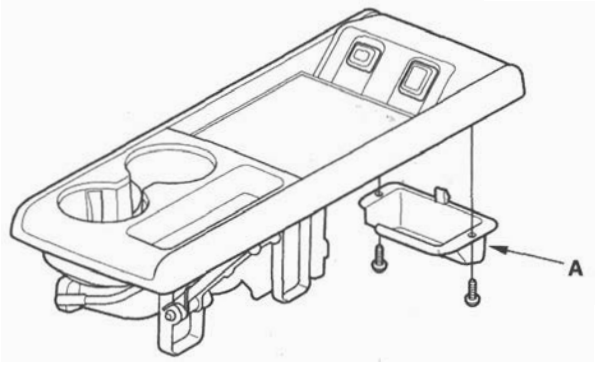

2. Disconnect the 2P connector (A) from the console accessory power socket (B).

EX-L

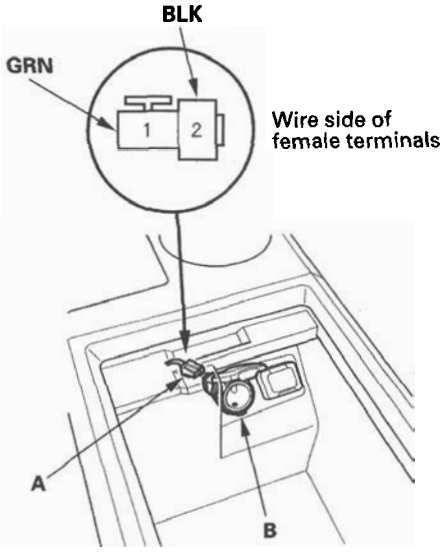

EX

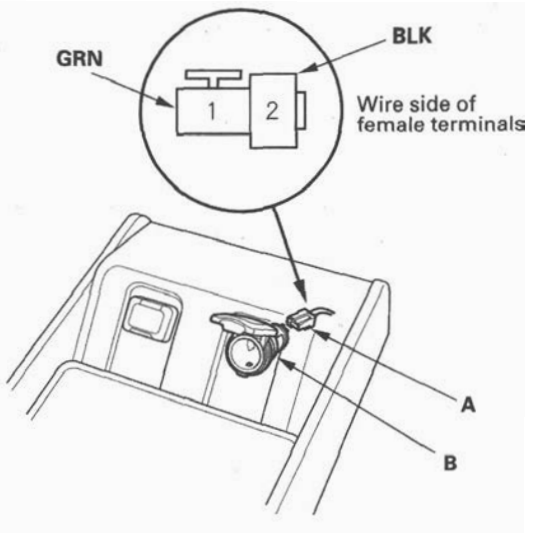

3. Inspect the connector terminals to be sure they are all making good contact.

   - If the terminals are bent, loose, or corroded, repair them as necessary and recheck the system.
   - If the terminals look OK, go to step 4.

4. Turn the ignition switch to ACC (I).

5. Measure voltage between the No. 1 terminal and body ground. There should be battery voltage.

   - If there is battery voltage, go to step 6.
   - If there is no battery voltage, check for:
     - Blown No. 31 (15 A) fuse in the under-dash fuse/relay box.
     - Faulty console accessory power socket relay.
     - Poor ground (G502).
     - An open in the wire.

6. Check for continuity between the No. 2 terminal and body ground. There should be continuity.

   - If there is continuity, go to step 7.
   - If there is no continuity, check for:
     - Poor ground (G551).
     - An open in the wire.

7. Remove the socket (A).

EX-L

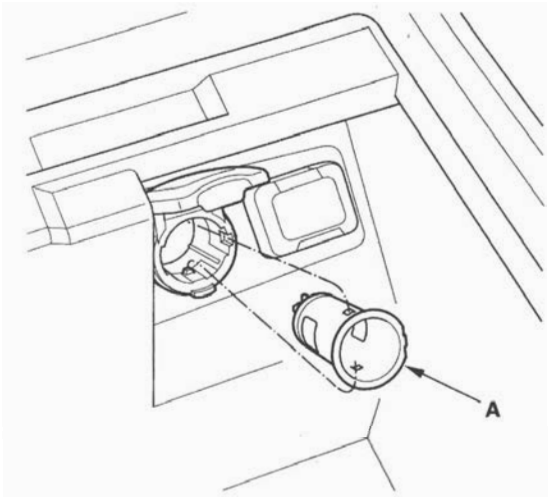

EX

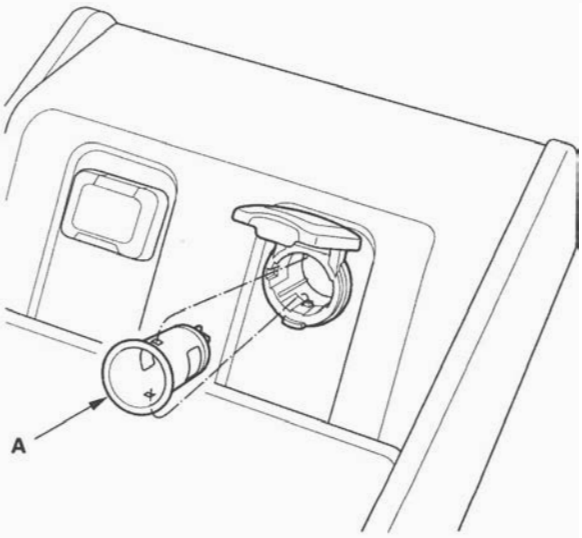

8. Remove the housing (A).

EX-L

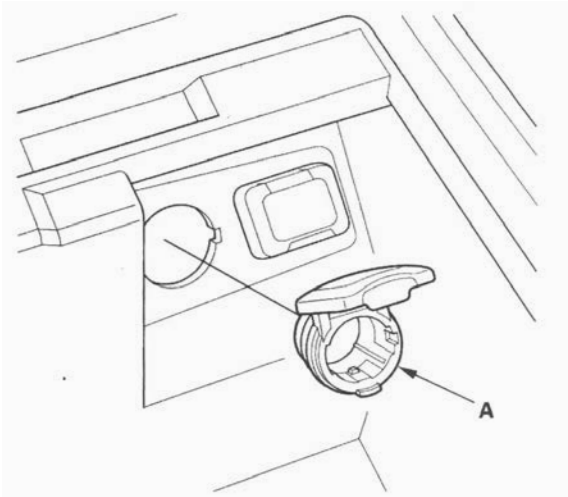

EX

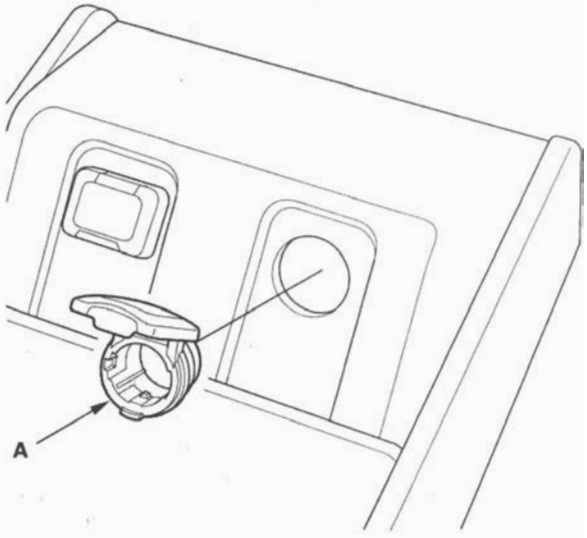

9. Install the power socket in the reverse order of removal.

Cargo Area Accessory Power Socket Test/Replacement

NOTE: If all of the front, console, and cargo area accessory power sockets do not work, check the No. 34 (7.5 A) fuse in the under-dash fuse/relay box and ground (G502).

1. Remove the rear side trim panel (see page 20-75).

2. Disconnect the 2P connector (A) from the cargo area accessory power socket (B).

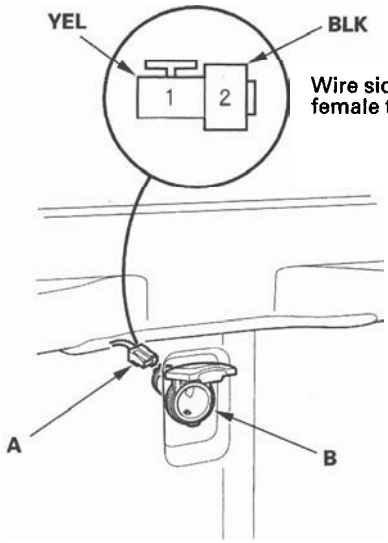

3. Inspect the connector terminals to be sure they are all making good contact.

   - If the terminals are bent, loose, or corroded, repair them as necessary and recheck the system.
   - If the terminals look OK, go to step 4.

4. Turn the ignition switch to ACC (I).

5. Measure voltage between the No. 1 terminal and body ground. There should be battery voltage.

   - If there is battery voltage, go to step 5.
   - If there is no battery voltage, check for:
     - Blown No. 28 (15 A) fuse in the under-dash fuse/relay box.
     - Faulty cargo area accessory power socket relay.
     - Poor ground (G502).
     - An open in the wire.

6. Check for continuity between the No. 2 terminal and body ground. There should be continuity.

   - If there is continuity, go to step 7.
   - If there is no continuity, check for:
     - Poor ground (G602).
     - An open in the wire.

7. Remove the socket (A).

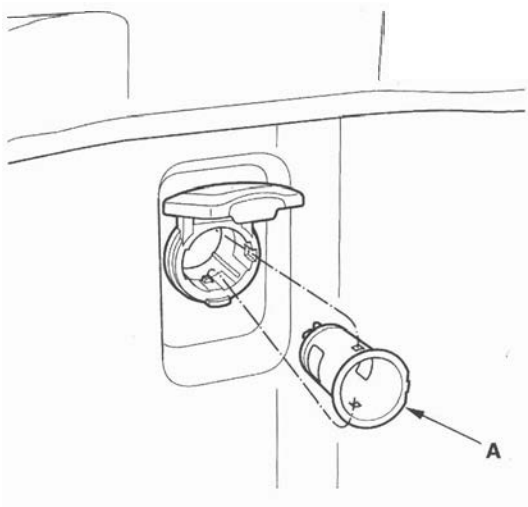

8. Remove the housing (A) from the panel.

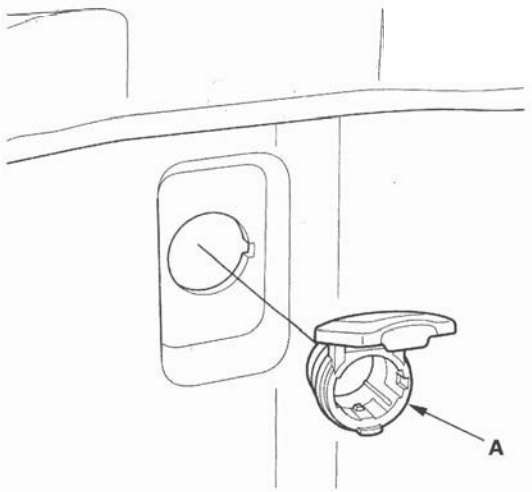

9. Install the power socket in the reverse order of removal.

Component Location Index

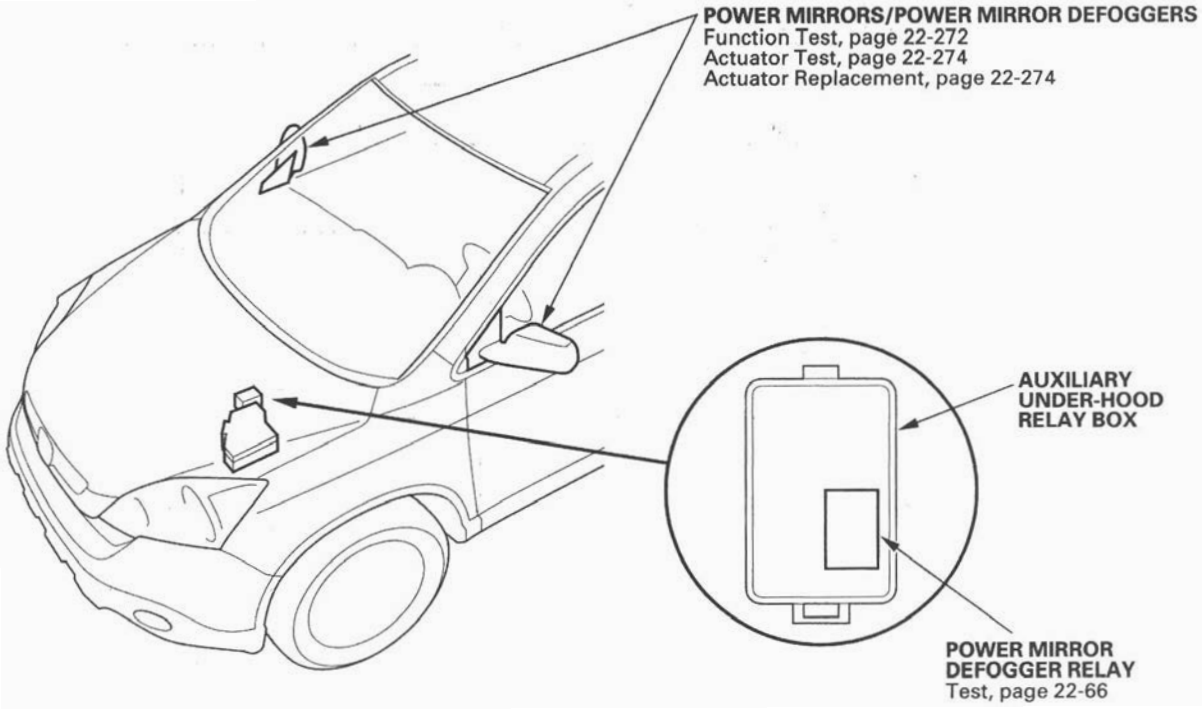

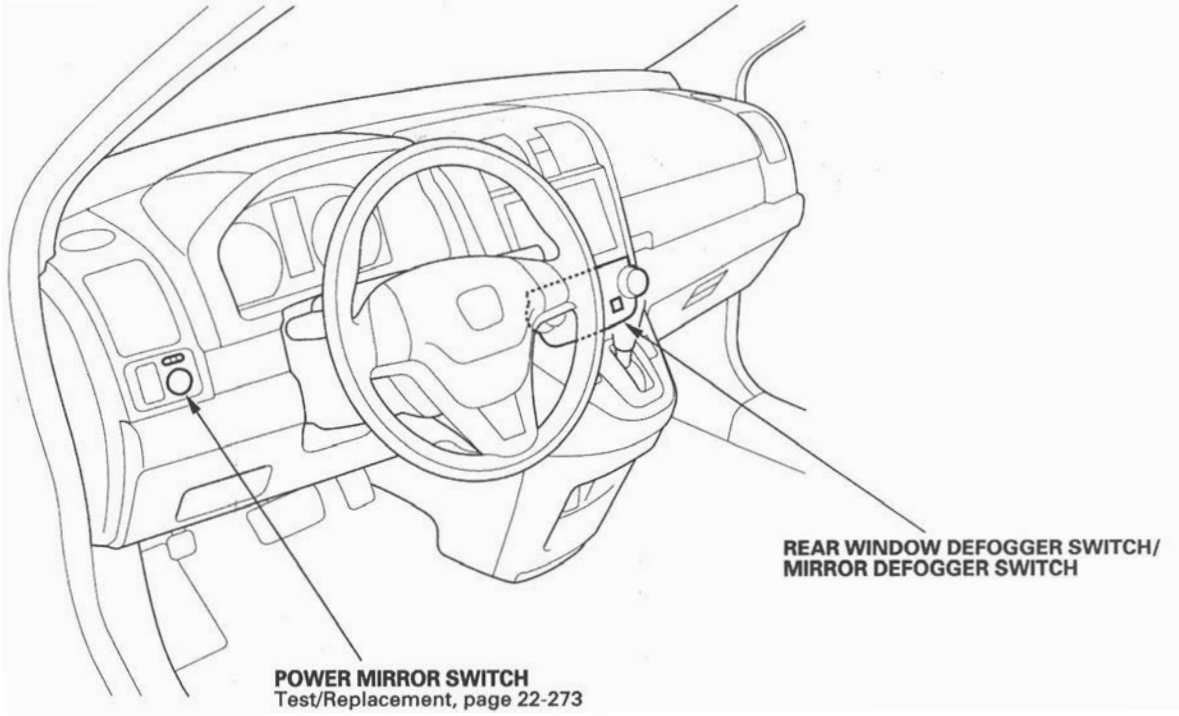

Power Mirrors

Circuit Diagram

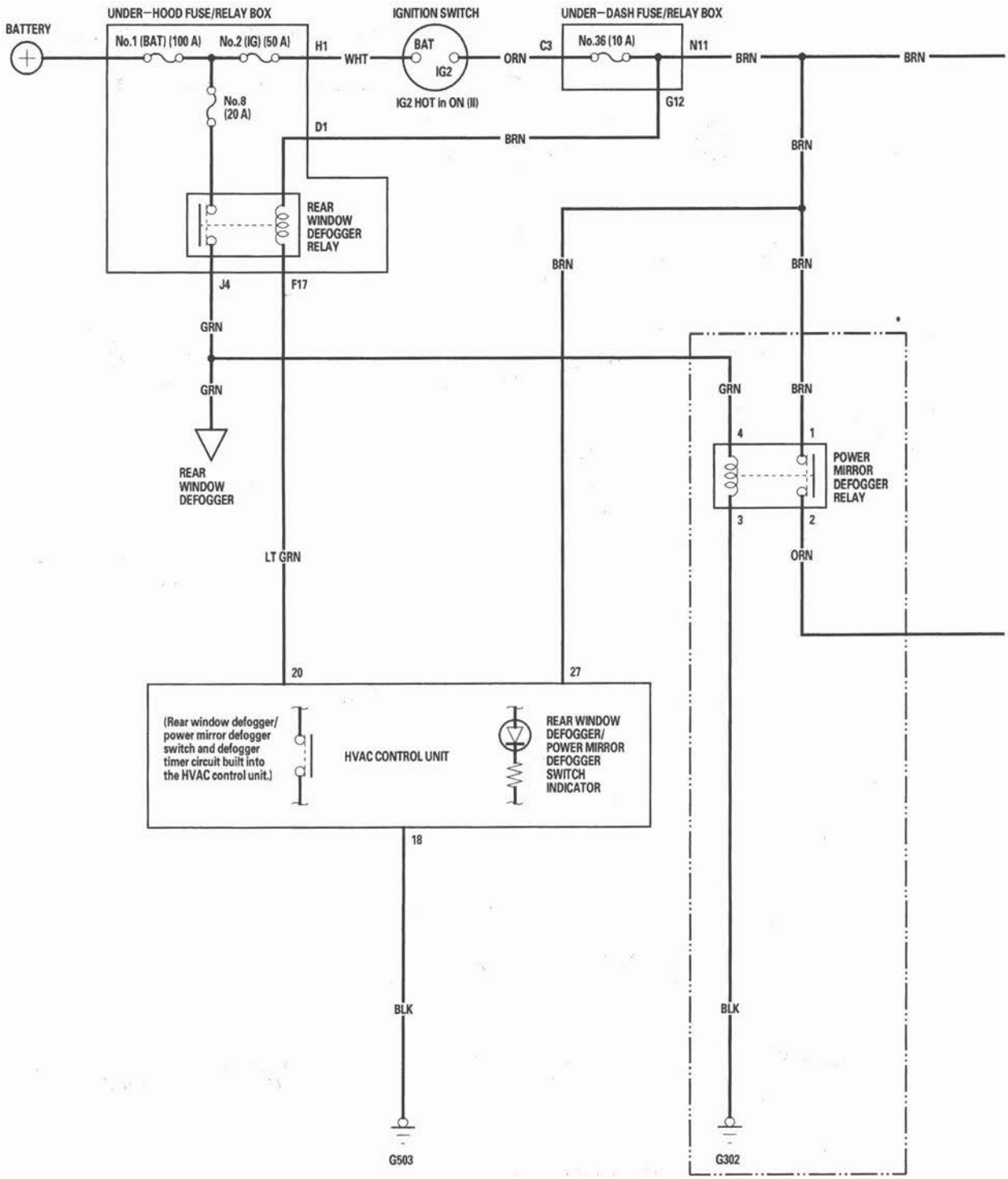

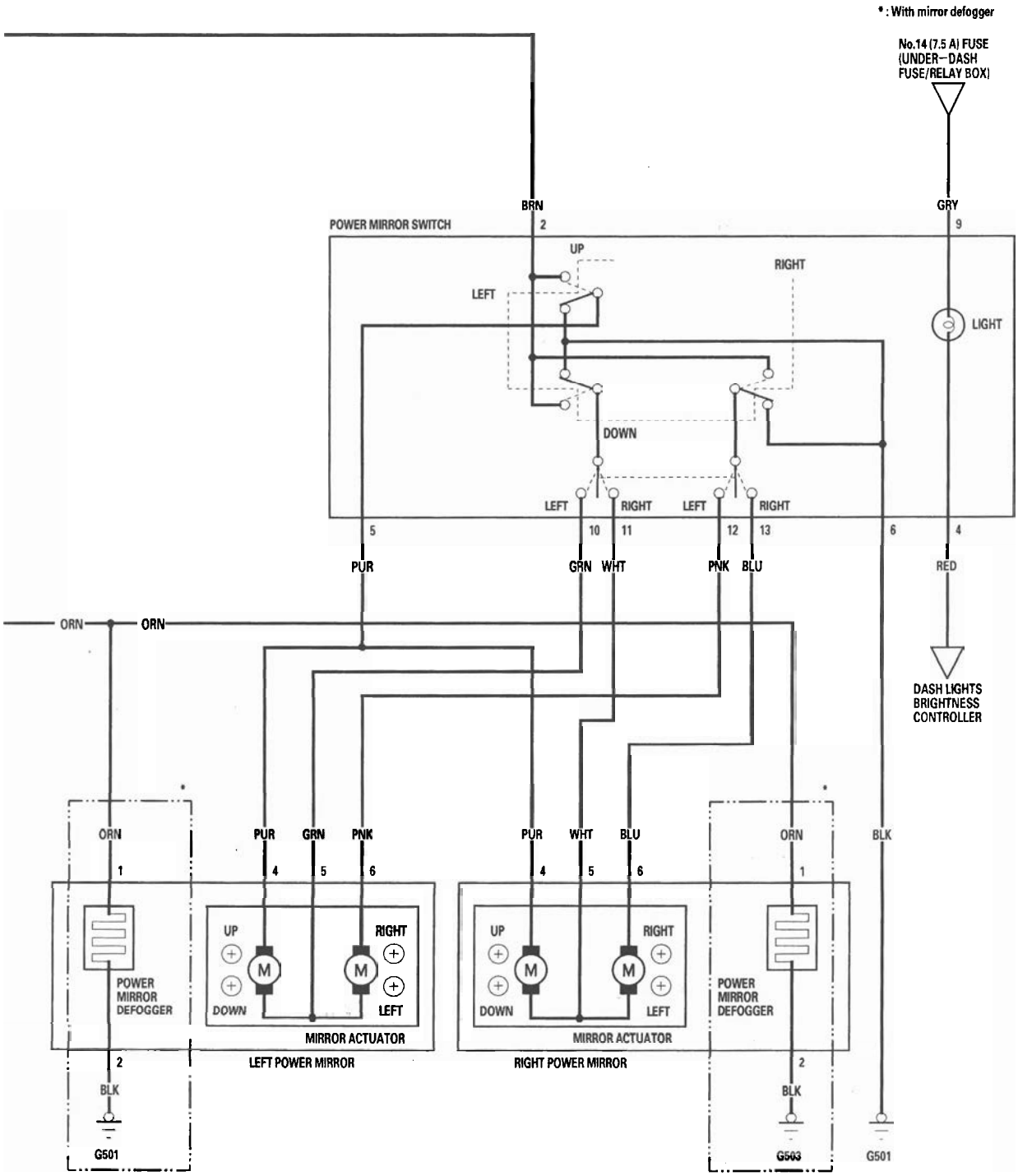
*: With mirror defogger
No.14 (7.5 A) FUSE (UNDER-DASH FUSE/RELAY BOX)
BRN
GRY
POWER MIRROR SWITCH
2
9
UP
RIGHT
LEFT
LIGHT
DOWN
LEFT
RIGHT
LEFT
RIGHT
5
10
11
12
13
6
4
PUR
GRN
WHT
PNK
BLU
RED
ORN
ORN
DASH LIGHTS BRIGHTNESS CONTROLLER
ORN
PUR
GRN
PNK
PUR
WHT
BLU
ORN
BLK
1
4
5
6
4
5
6
1
UP
RIGHT
M
M
DOWN
LEFT
POWER MIRROR DEFOGGER
MIRROR ACTUATOR
LEFT POWER MIRROR
UP
RIGHT
M
M
DOWN
LEFT
MIRROR ACTUATOR
RIGHT POWER MIRROR
POWER MIRROR DEFOGGER
2
2
BLK
BLK
BLK
G501
G503
G501

Function Test

1. Remove the power mirror switch (see page 22-273).

2. Disconnect the 13P connector (A) from the power mirror switch (B).

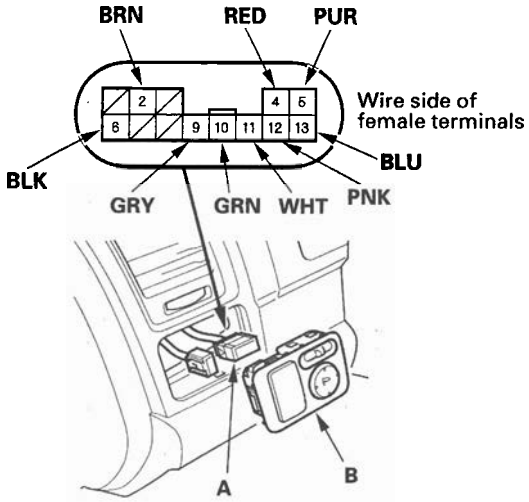

3. Choose the appropriate test based on the symptom:

   - Both mirrors don't work, go to step 4.
   - Left mirror doesn't work, go to step 6.
   - Right mirror doesn't work, go to step 7.
   - Mirror defoggers don't work, go to step 8.

Both mirrors

4. Check for voltage between the No. 2 terminal and body ground with the ignition switch ON (II). There should be battery voltage.

   - If there is no battery voltage, check for:
     – Blown No. 36 (10 A) fuse in the under-dash fuse/relay box.
     – An open in the BRN wire.
   - If there is battery voltage, go to step 5.

5. Check for continuity between the No. 6 terminal and body ground.
   There should be continuity.

   - If there is no continuity, check for:
     – An open in the BLK wire.
     – Poor ground (G501).
   - If there is continuity, check both mirrors individually.

Left mirror

6. Connect the No. 2 and No. 10 terminals, and the No. 5 (or No. 12) and No. 6 terminals with jumper wires.
   The left mirror should tilt down (or swing left) with the ignition switch ON (II).

   - If the left mirror does not tilt down (or does not swing left), check for an open in the PUR (or PNK) wire between the left mirror and the 13P connector.
     If the wire is OK, check the left mirror actuator.
   - If the mirror neither tilts down nor swings left, repair the GRN wire.
   - If the mirror works properly, check the mirror switch.

Right mirror

7. Connect the No. 2 and No. 11 terminals, and the No. 5 (or No. 13) and No. 6 terminals with jumper wires. The right mirror should tilt down (or swing left) with the ignition switch ON (II).

   - If the mirror does not tilt down (or does not swing left), check for an open in the PUR (or BLU) wire between the right mirror and the 13P connector.
     If the wire is OK, check the right mirror actuator.
   - If the mirror neither tilts down nor swings left, repair the WHT wire.
   - If the mirror works properly, check the mirror switch.

Defogger

8. Connect the power mirror defogger relay No. 1 and No. 2 terminals with a jumper wire, and check for voltage between the No. 1 terminal of the mirror connectors and body ground. There should be battery voltage and both mirrors should warm up with the ignition switch ON (II).
   - If there is no voltage or neither warms up, check for:
     – An open in the ORN wire.
     – Blown No. 36 (10 A) fuse in the under-dash fuse/relay box.
   - If only one fails to warm up, check:
     – Its defogger.
     – Poor ground (G501, G503).
   - If both warm up, check the defogger switch or the power mirror defogger relay.

Power Mirror Switch Test/Replacement

1. Remove the driver's dashboard lower cover (see page 20-101).

2. Push the driver's switch panel (A) out from the dashboard, and disconnect the connectors (B).

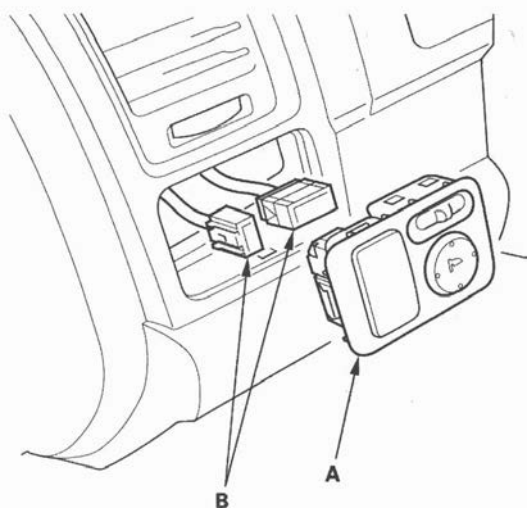

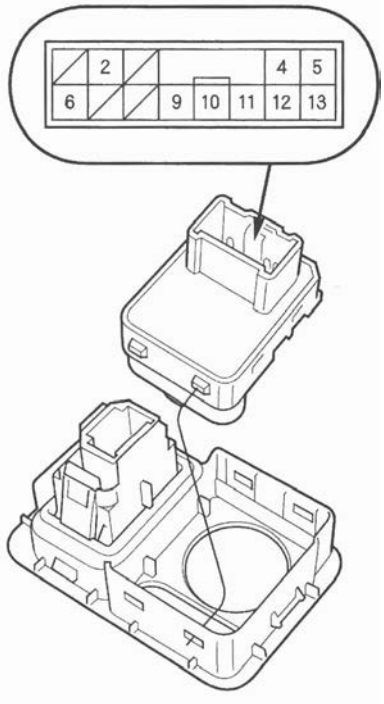

3. Check for continuity between the terminals in each switch position according to the table.

Position		Terminal 2	5	6	10	11	12	13
L	UP	○	○		○			
	DOWN	○		○	○			
	LEFT	○			○		○	
	RIGHT	○			○		○	
R	UP	○	○			○		
	DOWN	○		○		○		
	LEFT	○				○		○
	RIGHT	○				○		○

4. If the continuity is not as specified, replace the switch.

5. Install the switch in the reverse order of removal.

Power Mirror Actuator Test

1. Remove the door panel (see page 20-6).
2. Disconnect the 6P connector (A) from the power mirror actuator.

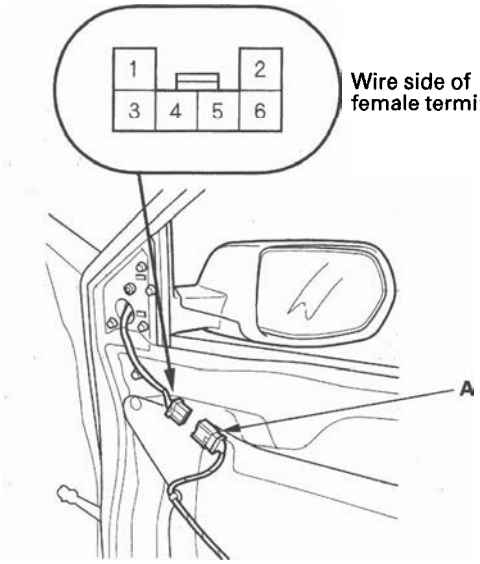

3. Check actuator operation by connecting power and ground according to the table.

Terminal / Position	4	5	6
TILT UP	⊕	⊖	
TILT DOWN	⊖	⊕	
SWING LEFT		⊕	⊖
SWING RIGHT		⊖	⊕

4. If the mirror fails to work properly, replace the power mirror actuator.

Defogger Test

5. Check for continuity between the power mirror actuator 6P connector No. 1 and No. 2 terminals. There should be continuity. If there is no continuity, check for an open in the wire between the mirror actuator 6P connector and the mirror holder terminals. If the wire harness is OK, replace the mirror holder.

Power Mirror Actuator Replacement

Removal

1. Remove the mirror holder (see page 20-34).
2. Remove the power mirror (see page 20-33), and disconnect the power mirror 6P connector from the door wire harness.
3. Record the power mirror 6P connector (A) terminal locations and wire colors.

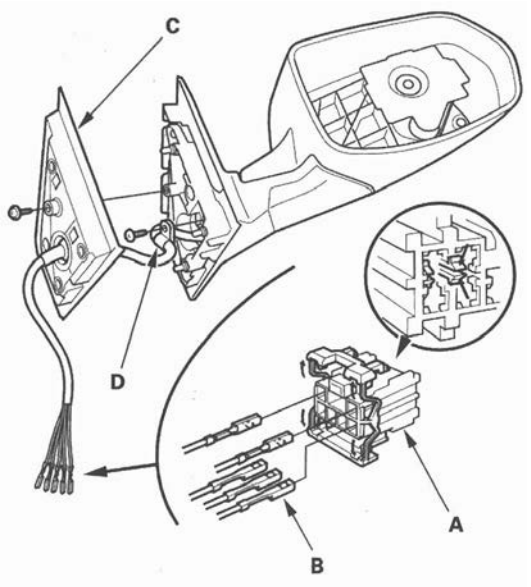

4. Disassemble the power mirror 6P connector, and remove all terminals (B) from the connector.
5. Remove the screw and the gasket (C).
6. Remove the screw and the harness clip (D).

7. Remove the cover (A).

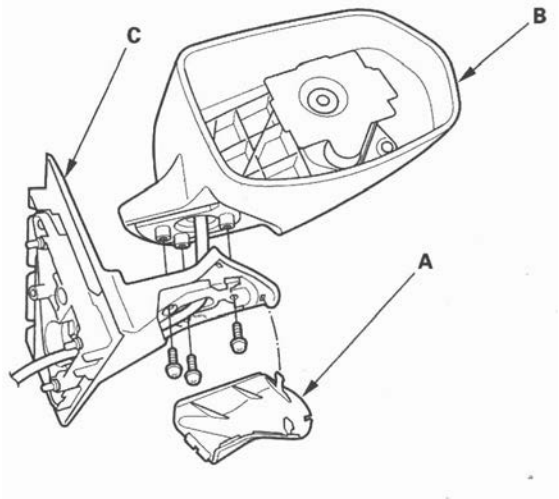

8. Remove the three screws, and separate the mirror housing (B) from the bracket (C).

9. Remove the screws and the actuator (A).

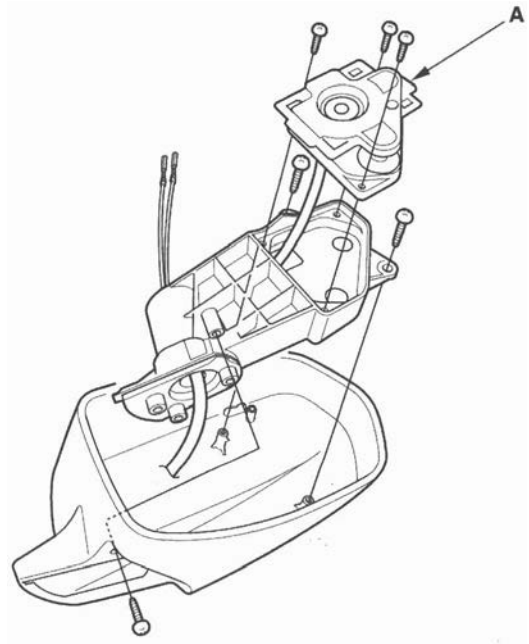

Installation

1. Route the wire harness (A) of a new actuator through the hole in the bracket (B) and gasket (C).

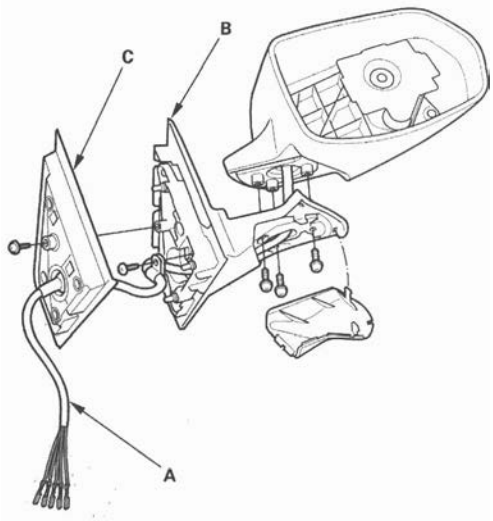

2. Install the parts in the reverse order of removal.

3. Insert the new actuator terminals into the connector in the original arrangement.

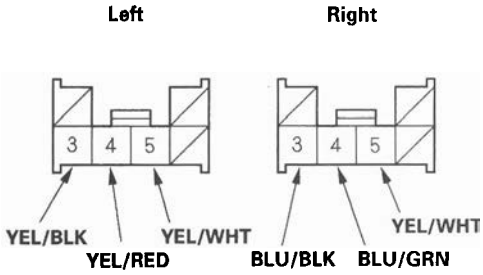

Wire side of female terminals

4. Apply tape to seal the intersection of the wire harness and the gasket.

5. Reassemble in the reverse order of disassembly.

   NOTE: Be careful not to break the mirror when reinstalling it to the actuator.

6. Reinstall the mirror assembly on the door.

7. Operate the power mirror to ensure smooth operation.

Seat Heaters

Component Location Index

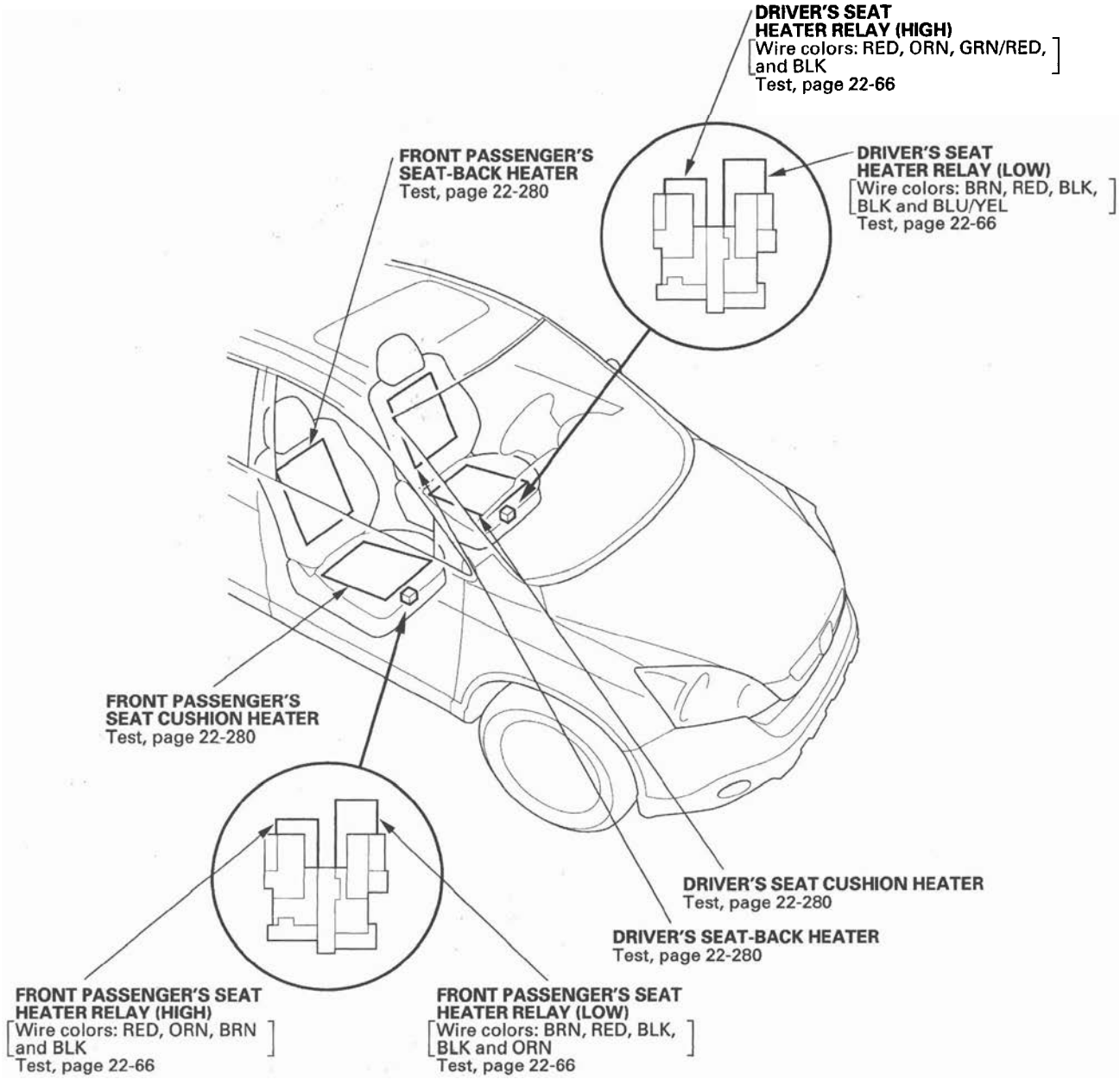

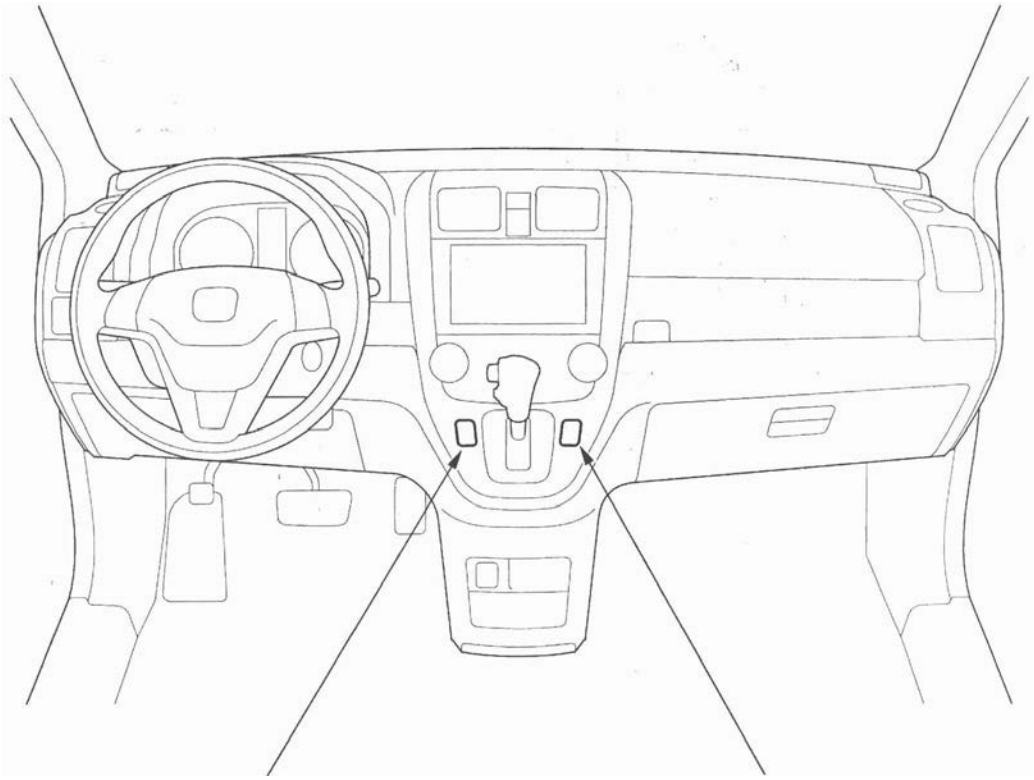

DRIVER'S SEAT HEATER SWITCH
Test/Replacement, page 22-281

FRONT PASSENGER'S SEAT HEATER SWITCH
Test/Replacement, page 22-281

Seat Heaters

Circuit Diagram

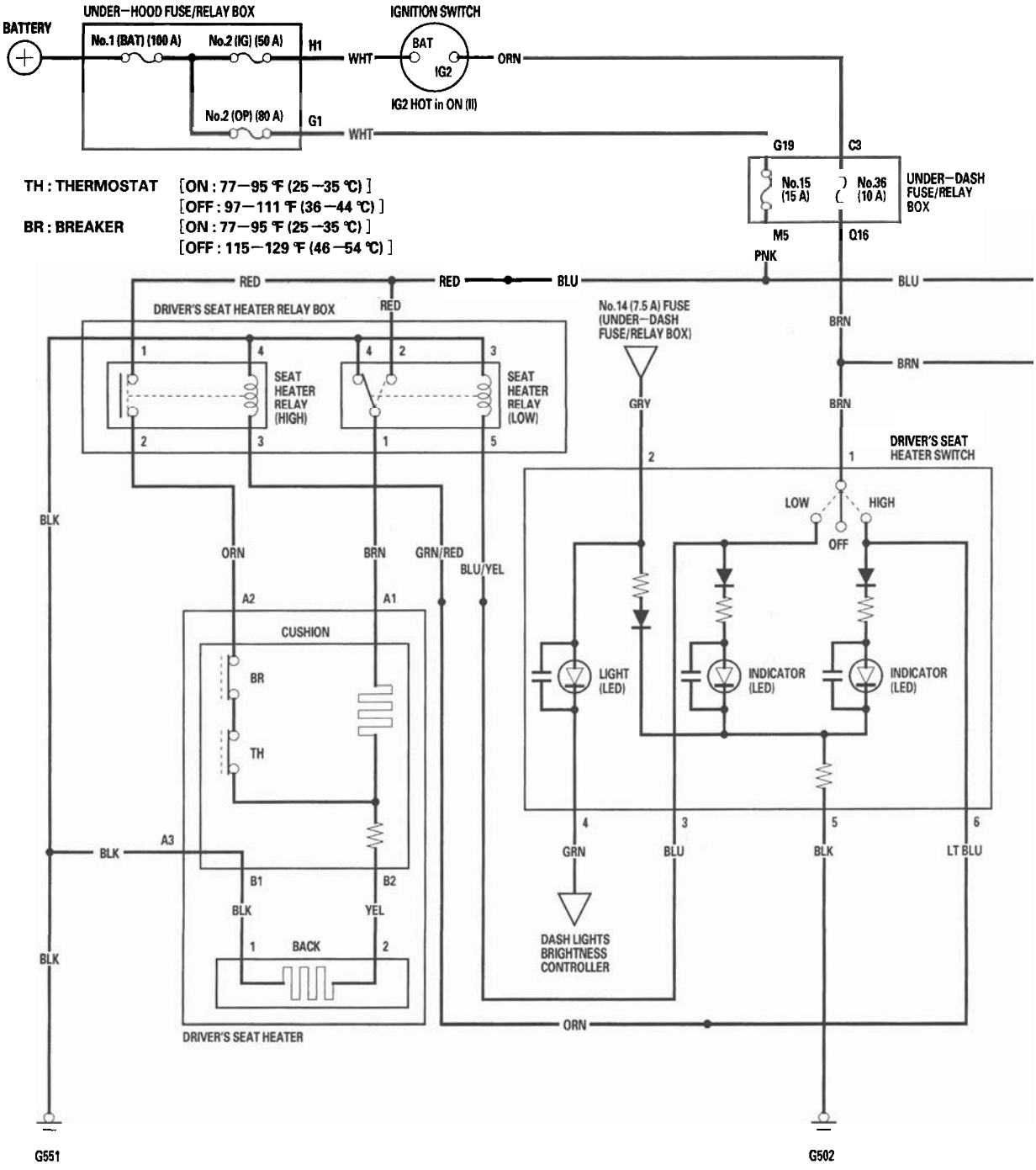

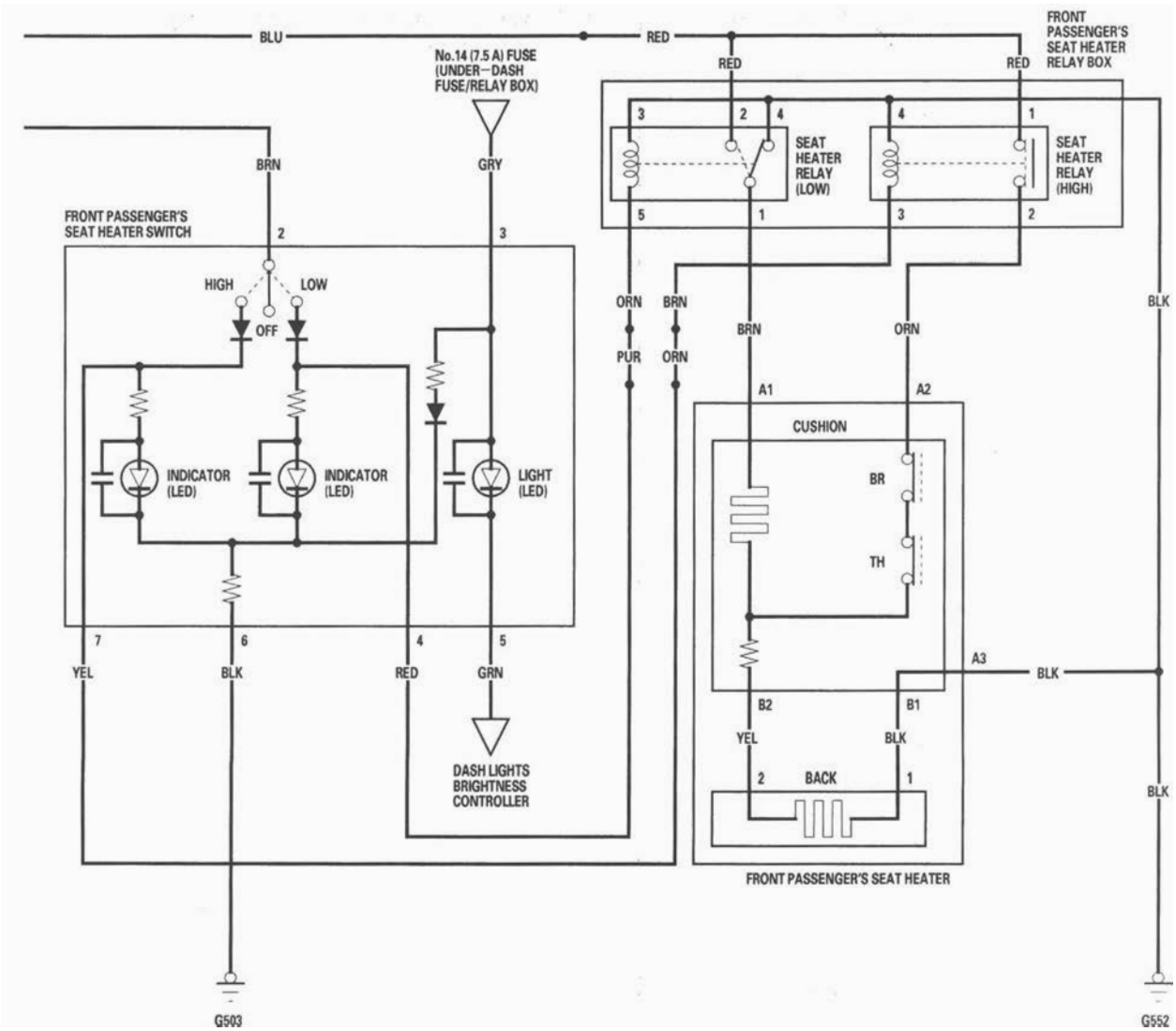
BLU
RED
No.14 (7.5 A) FUSE (UNDER–DASH FUSE/RELAY BOX)
FRONT PASSENGER'S SEAT HEATER RELAY BOX
RED
RED
BRN
GRY
FRONT PASSENGER'S SEAT HEATER SWITCH
2
3
HIGH
LOW
OFF
INDICATOR (LED)
INDICATOR (LED)
LIGHT (LED)
SEAT HEATER RELAY (LOW)
SEAT HEATER RELAY (HIGH)
3
2
4
1
5
1
4
1
3
2
ORN
BRN
PUR
ORN
BRN
ORN
BLK
A1
A2
CUSHION
BR
TH
A3
BLK
B2
B1
YEL
BLK
2
BACK
1
BLK
7
6
4
5
YEL
BLK
RED
GRN
DASH LIGHTS BRIGHTNESS CONTROLLER
FRONT PASSENGER'S SEAT HEATER
G503
G552

Seat Heaters

Seat Heater Test

1. Remove the driver's or front passenger's seat (see page 20-118).

2. Disconnect the 3P (A) and 2P (B) connectors from the seat heater.

Driver's Seat

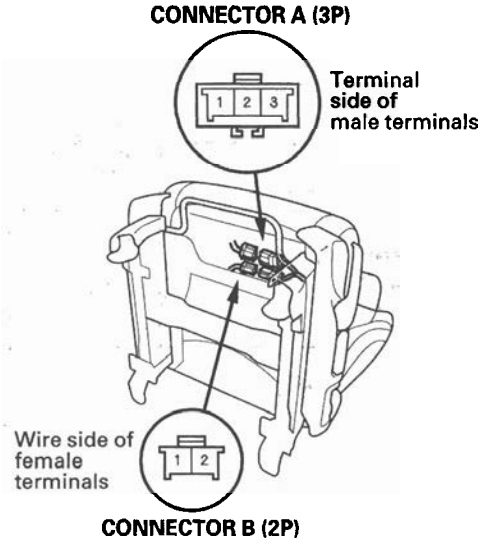

Front Passenger's Seat

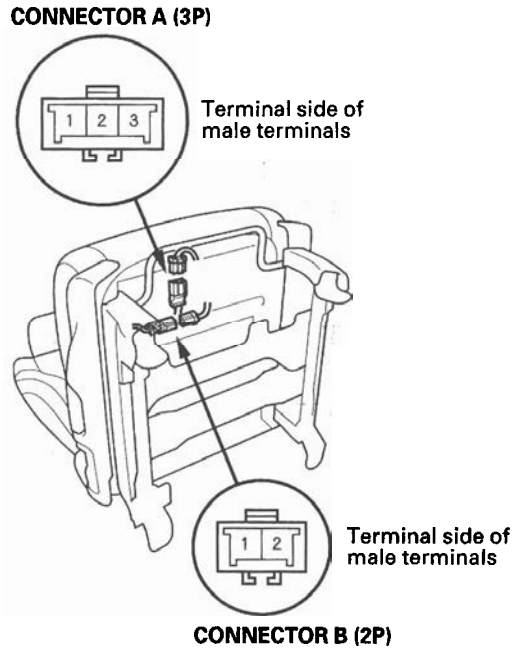

3. Check for continuity between the seat heater connector B (2P) No. 1 and No. 2 terminals. There should be continuity.

4. Reconnect the seat heater connector B (2P) to the seat-back heater.

5. Check for continuity between the seat heater connector A (3P) No. 1 and No. 2 terminals, No. 2 and No. 3 terminals, and No. 1 and No. 3 terminals. There should be continuity.

6. If the continuity is not as specified, replace the appropriate seat heater.

Switch Test/Replacement

1. Remove the shift lever panel (see page 20-95).

2. Disconnect the 6P (or 7P*) connector from the seat heater switch (A), then remove the switch.
   * : Front passenger's

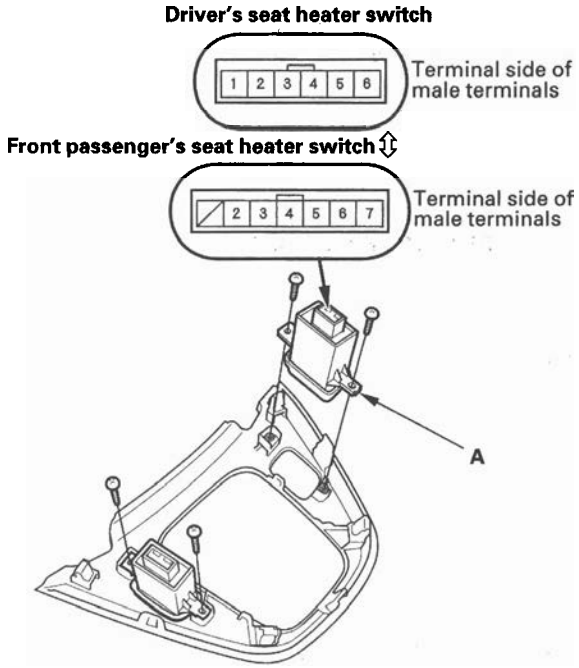

3. Check for continuity between the terminals in each switch position according to the table.

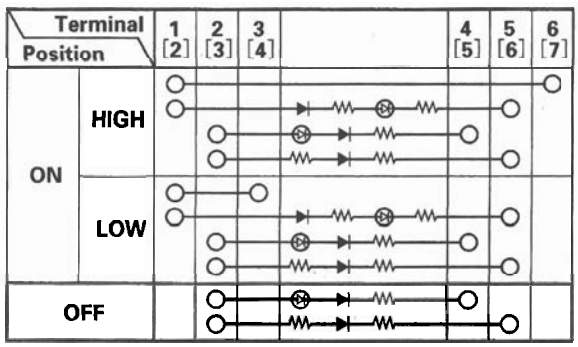

[ ] : **Front passenger's seat heater switch**

4. If the continuity is not as specified, replace the switch.

Rear Window Defogger

Component Location Index

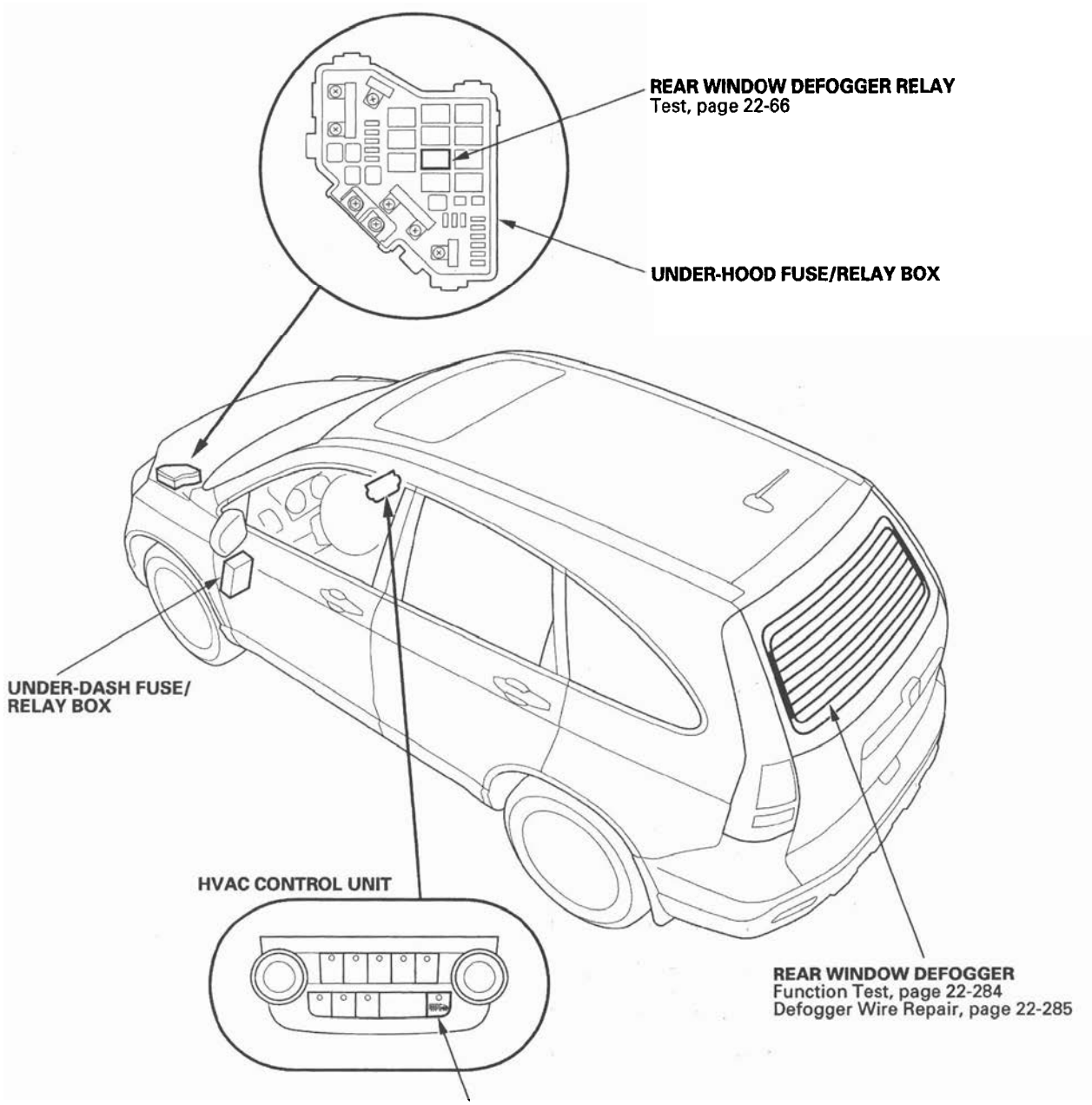

Circuit Diagram

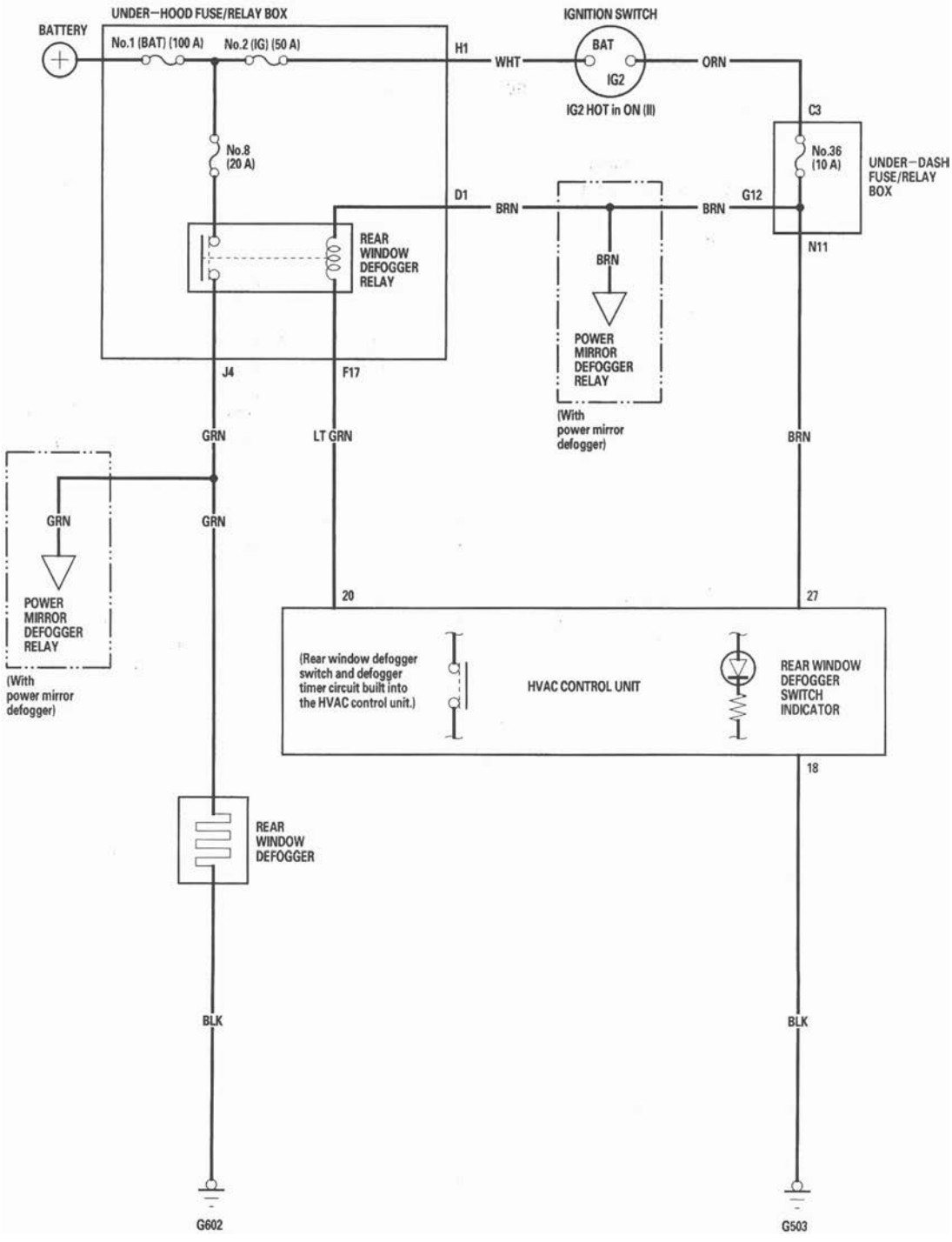

Rear Window Defogger

Function Test

NOTE:
- Be careful not to scratch or damage the defogger wires with the tester probe.
- Before testing, check the No. 8 (20 A) fuse in the under-hood fuse/relay box and the No. 36 (10 A) fuse in the under-dash fuse/relay box.

1. Measure voltage between the positive terminal (A) and body ground with the ignition switch and the defogger switch ON.
   There should be battery voltage.

   - If there is no voltage, check for:
     – Faulty rear window defogger relay.
     – Faulty HVAC control unit.
     – An open in the GRN wire to the positive terminal.
   - If there is voltage, go to step 2.

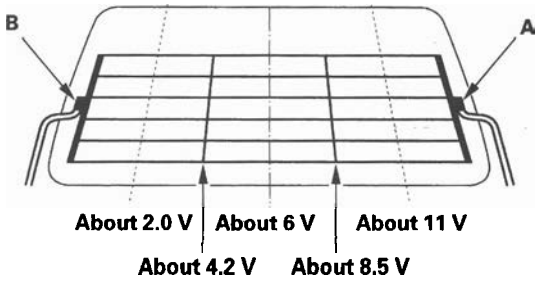

2. Turn the ignition switch OFF, and disconnect the negative terminal (B) from the rear window defogger.

3. Check for continuity between the negative terminal (B) and body ground.

   If there is no continuity, check for an open in the wire or poor ground (G602). If there is continuity, go to step 4.

4. Reconnect the negative terminal to the rear window defogger.

5. Turn the ignition switch ON (II) and the rear window defogger switch ON.

6. Touch the voltmeter positive probe to each point on each defogger wire, and the negative probe to the negative terminal.

   - If the voltage is as specified, the defogger wire up to that point is OK.
   - If the voltage is not as specified, repair the defogger wire.
     – If it is more than specified at one of the points, there is a break in the negative half of the wire.
     – If it is less than specified at one of the points, there is a break in the positive half of the wire.

Defogger Wire Repair

NOTE: To make an effective repair, the broken section must be no longer than 1 in. (25 mm).

1. Lightly rub the area around the broken section (A) with fine steel wool, then clean it with alcohol.

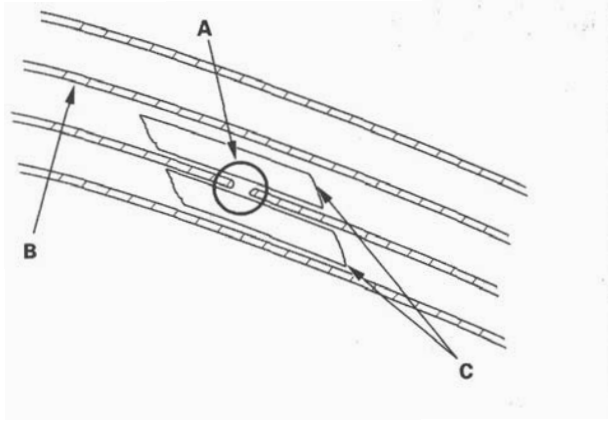

2. Carefully mask above and below the broken portion of the defogger wire (B) with cellophane tape (C).

3. Using a small brush, apply a heavy coat of silver conductive paint (commercially available) (A) extending about 1/8" on both sides of the break. Allow 25 minutes to dry.

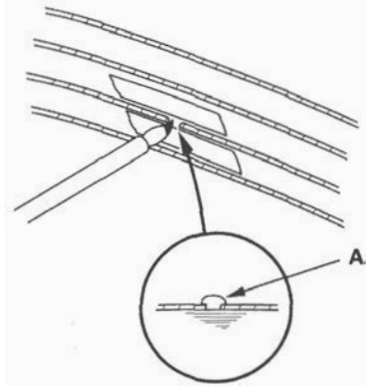

4. Do the function test to confirm that the wire is repaired (see page 22-284).

5. Apply a second coat of paint in the same way. Let it dry 3 hours before removing the tape.

Immobilizer System

Component Location Index

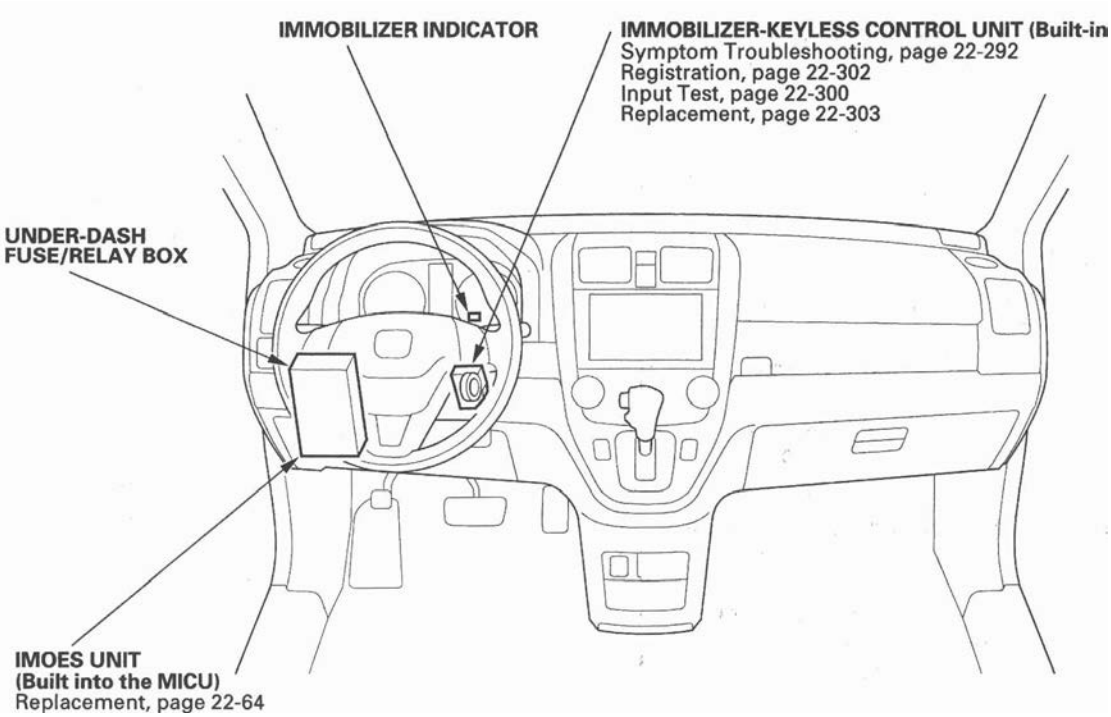

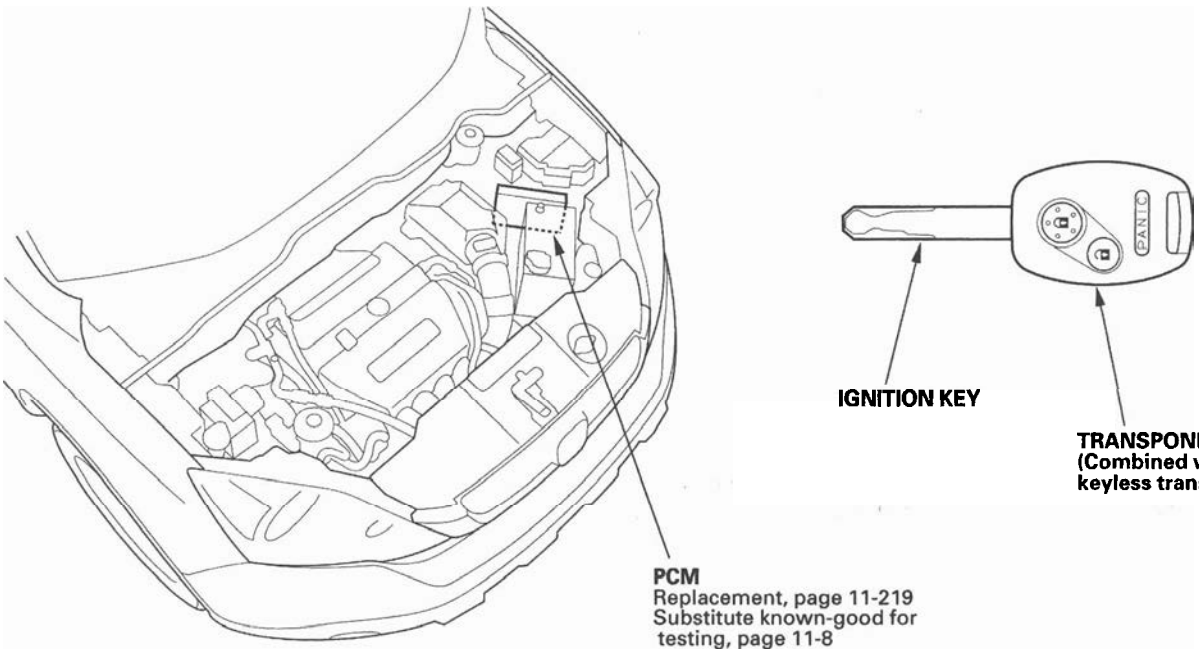

System Description

The vehicle is equipped with an immobilizer system that will disable the vehicle unless a programmed ignition key is used.
This system consists of a transponder combined with a keyless transmitter, an immobilizer-keyless control unit, the MICU (has built-in imoes unit), an immobilizer indicator, and the PCM.
When the immobilizer key (programmed by the HDS) is inserted into the ignition switch and turned to the ON (II) position, the immobilizer-keyless control unit sends power to the transponder in the ignition key. The transponder then sends a coded signal back to the immobilizer-keyless control unit which then sends a coded signal to the PCM and the MICU (imoes unit).
The PCM and MICU (imoes unit) identify this coded signal, then voltage is supplied to the fuel pump.

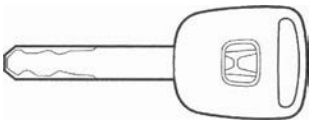

Mechanical key (Including transponder)

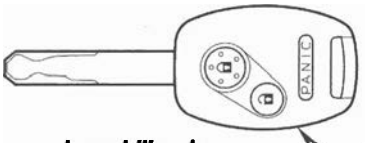

Immobilizer key

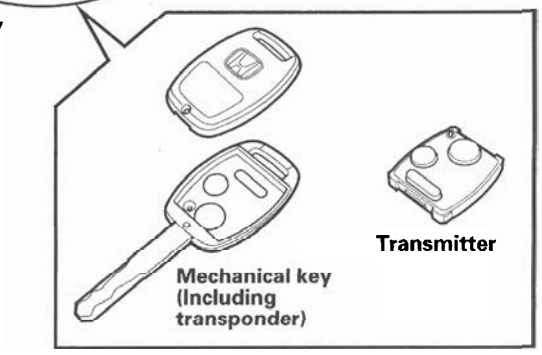

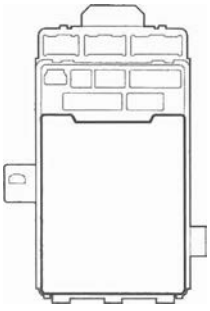

Under-dash fuse/relay box, with MICU (Imoes unit)



Steering lock assembly

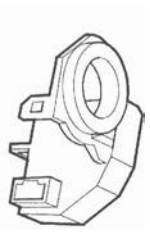

Immobilizer-keyless control unit (Built-in receiver)

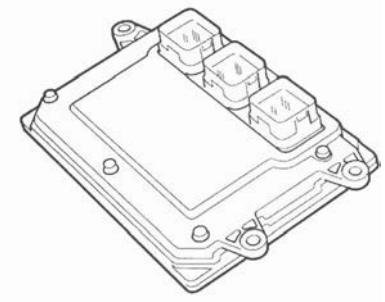

PCM

If the wrong key has been used or the code was not received or recognized by the unit, the indicator will quickly flash once, then it will blink until the ignition switch is turned OFF. When the ignition switch is turned to the LOCK (0) position, the immobilizer system indicator does not illuminate. This is unique to the type 6 system.

Immobilizer System

Circuit Diagram

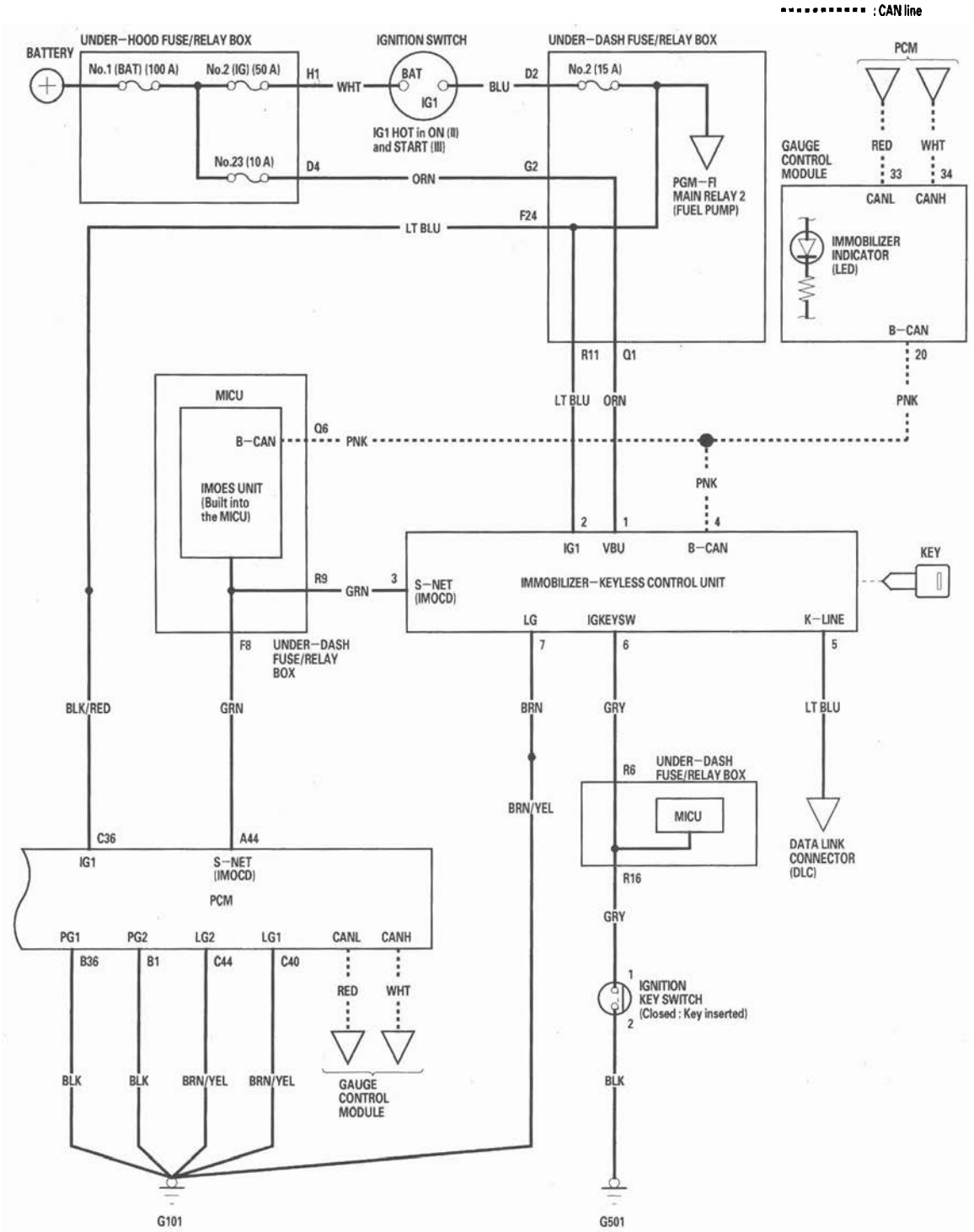

DTC Troubleshooting

DTC B1905: Immobilizer-Keyless Control Unit Lost Communication with MICU (DRLOCKSW Message)

NOTE: If you are troubleshooting multiple DTCs, be sure to follow the instructions in B-CAN System Diagnosis Test Mode A (see page 22-92).

1. Clear the DTCs with the HDS.
2. Turn the ignition switch OFF, and then back ON (II).
3. Wait for 6 seconds or more.
4. Check for DTCs with the HDS.

   Is DTC B1905 indicated?

   YES—Go to step 5.

   NO—Intermittent failure, the system is OK at this time. Check for loose or poor connections between the immobilizer-keyless control unit and the MICU.■
5. Check for DTCs with the HDS.

   Are DTCs B1155, B1156, B1157, B1159, B1160, and B1188 all indicated with DTC B1905 at the same time?

   YES—Faulty MICU; replace the under-dash fuse/relay box (see page 22-64).■

   NO—Replace the immobilizer-keyless control unit (see page 22-303).■

DTC Troubleshooting (cont'd)

DTC B1906: Immobilizer-Keyless Control Unit Lost Communication with Gauge Control Module (A/T Message)

NOTE: If you are troubleshooting multiple DTCs, be sure to follow the instructions in B-CAN System Diagnosis Test Mode A (see page 22-92).

1. Clear the DTCs with the HDS.
2. Turn the ignition switch OFF, and then back ON (II).
3. Wait for 6 seconds or more.
4. Check for DTCs with the HDS.

   Is DTC B1906 indicated?

   YES—Go to step 5.

   NO—Intermittent failure, the system is OK at this time. Check for loose or poor connections between the gauge control module and the immobilizer-keyless control unit.■
5. Select the BODY ELECTRICAL system select menu, then enter the UNIT INFORMATION menu.
6. Check the condition of the gauge control module from the CONNECTED UNIT.

   Is NOT AVAILABLE indicated?

   YES—Go to step 7.

   NO—Replace the gauge control module (see page 22-248).
7. Turn the ignition switch OFF.
8. Disconnect the gauge control module 36P connector.
9. Turn the ignition switch ON (II).
10. Measure voltage between the gauge control module 36P connector No. 18 and No. 36 terminals and body ground individually.

GAUGE CONTROL MODULE 36P CONNECTOR

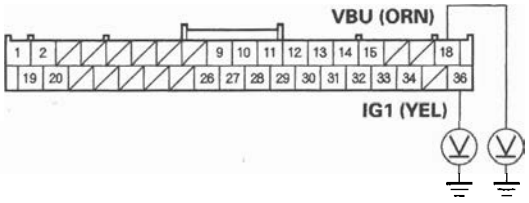

Wire side of female terminals

Is there battery voltage?

YES—Go to step 11.

NO—Check the No. 23 (10 A) fuse in the under-hood fuse/relay box and the No. 10 (7.5 A) fuse in the under-dash fuse/relay box. If the fuse is blown, replace the fuse and recheck the DTCs. If the fuses are OK, repair an open in the wire between the under-dash fuse/relay box and the gauge control module.■

11. Turn the ignition switch OFF.
12. Check for continuity between the gauge control module 36P connector No. 15 and No. 19 terminals and body ground individually.

GAUGE CONTROL MODULE 36P CONNECTOR

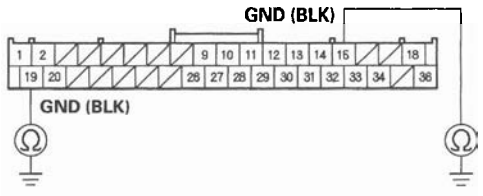

Wire side of female terminals

Is there continuity?

YES—Go to step 13.

NO— Repair an open in the wire or poor ground (G501).■

13. Disconnect the under-dash fuse/relay box connector Q (16P).

14. Check for continuity between the under-dash fuse/relay box connector Q (16P) No. 6 terminal and the gauge control module 36P connector No. 20 terminal.

GAUGE CONTROL MODULE 36P CONNECTOR
Wire side of female terminals

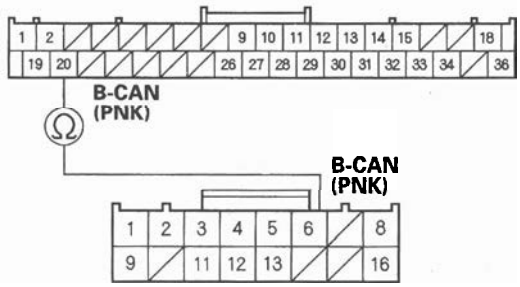

UNDER-DASH FUSE/RELAY BOX CONNECTOR Q (16P)
Wire side of female terminals

Is there continuity?

YES— Replace the gauge control module (see page 22-248). ■

NO—Repair an open in the wire between the MICU and the gauge control module. ■

Symptom Troubleshooting Information

General Check Before Troubleshooting

Before troubleshooting the immobilizer system, check the following general items and solve any if applicable:

- The battery is low; charge the battery fully, then troubleshoot the immobilizer system.
- The ignition key is not a genuine Honda part; use the Honda-approved key blank, register the key, then troubleshoot the immobilizer system.
- A key ring, keys, or a key case is used; remove the key from it, and troubleshoot the immobilizer system with a key only.
- An aftermarket electrical part is attached; remove it, then troubleshoot the immobilizer system.

Symptom Troubleshooting Using the Immobilizer Indicator Lighting Pattern

The pattern of the immobilizer indicator can help troubleshoot the condition of the immobilizer system. Following are descriptions of the four possible patterns.

Normal operation
If the immobilizer code is identified, the immobilizer indicator quickly flashes once when the ignition switch is turned ON (II).
The immobilizer indicator does not come on when the ignition switch is turned OFF.

Immobilizer code is not identified
If the immobilizer code is not identified, the immobilizer indicator will quickly flash once, then will blink until the ignition switch is turned OFF. When the ignition switch is turned OFF, the indicator will blink ten times, then go OFF. The state of the immobilizer key registration and the IMOCD line can be checked by doing a SYSTEM CHECK with the HDS (see page 22-6).

Immobilizer indicator does not come on
If the immobilizer indicator does not come on after turning the ignition switch ON (II), an open or short in the F-CAN lines between the PCM and the gauge control module. Watch the malfunction indicator lamp (MIL). If the MIL stays on, go to the PGM-FI system troubleshooting (see page 11-62).

Immobilizer indicator does not go off
If the immobilizer indicator does not go off after turning the ignition switch ON (II), do the gauge control module self-diagnostic function (see page 22-229). If the indicator drive circuit is OK, do the SYSTEM CHECK with the HDS.

Symptom Troubleshooting Using Malfunctioning Circuit Functions

If a malfunction occurs in the immobilizer circuit, use the table to cross-reference the malfunction criteria to the line(s) that should be checked table:

Function / Line Error: Terminal No. (Wire Color)	Cause of Malfunction	Immobilizer Indicator	Engine Start	Key Registration	Tester Communication	Keyless Operation
1 (ORN)	VBU line open or short	Comes on, then goes off.	Possible	Impossible	Possible	Impossible
2 (LT BLU)	IG1 line open or short	Blinking	Impossible	Impossible	Impossible	Possible
3 (GRN)	IMOCD (S-NET) line open or short	Blinking	Impossible	Impossible	Impossible	Possible
4 (PNK)	B-CAN line open or short	Comes on, then goes off.	Possible	Impossible	Immobilizer: Possible Keyless: Impossible	Impossible
5 (LT BLU)	K-LINE line open or short	Comes on, then goes off.	Possible	Impossible	Impossible	Possible
6 (GRY)	KEYSW line open	Comes on, then goes off.	Possible	Possible	Possible	Possible (in spite of the key is in the ignition switch)
	KEYSW line short to ground					Impossible
7 (BRN)	GND (LG) line open	Blinking	Impossible	Impossible	Impossible	Impossible

System Check and Status Log

NOTE: The HDS can be used to:
- Check the state of the immobilizer key registration and the IMOCD line by doing a SYSTEM CHECK.
- Check the number of times the immobilizer control unit-receiver doesn't permit the engine to run by checking the STATUS LOG.

1. Connect the HDS to the data link connector, then turn the ignition switch ON (II) and follow the prompts to the MAIN MENU.

   NOTE: If the HDS does not communicate with the vehicle, go to the DLC circuit troubleshooting (see page 11-197).

2. At the MAIN MENU, enter IMMOBILIZER, then select the IMMOBILIZER SETUP.

3. Do the SYSTEM CHECK. If there is a system check number, do the troubleshooting for the item indicated.

4. Check the status log using the HDS. Troubleshoot the line with the highest counts. If all the lines are "0" zero, the problem may not be caused by the immobilizer system, check for ignition or fuel problems.

   NOTE: Once repaired, clear the status log by removing the No. 23 (10 A) fuse in the under-hood fuse/relay box or disconnecting the battery.

Symptom Troubleshooting

1. Troubleshoot the immobilizer system by the order of the priority shown:

Order of Priority	Symptom	Possible cause
1	Immobilizer indicator blinks after the ignition switch is turned OFF.	Symptom troubleshooting (see page 22-295).
2	Engine does not start with the immobilizer key.	Symptom troubleshooting (see page 22-296).
3	Immobilizer indicator does not come on.	Check the MIL indication. • If the MIL comes on, go to the PGM-FI System MIL circuit troubleshooting (see page 11-196). • If the MIL does not come on, replace the gauge control module.
4	Immobilizer indicator does not go off.	Symptom troubleshooting (see page 22-297).

Immobilizer indicator blinks

NOTE: Before troubleshooting, check the items listed in "General Check before Troubleshooting".

1. Turn the ignition switch OFF.
2. Connect the HDS, then turn the ignition switch ON (II).
3. From the main menu, enter IMMOBILIZER, then select the IMMOBILIZER SETUP.
4. Select the SYSTEM CHECK.

   Is the SYSTEM CHECK indicated?

   YES—Troubleshoot the immobilizer system according to the result of the SYSTEM CHECK (see page 22-298). ■

   NO—Go to step 5.
5. Turn the ignition switch OFF.
6. Enter the vehicle, and remove the ignition key from the ignition switch, then close the all doors.
7. Operate the keyless transmitter LOCK and UNLOCK several times in the vehicle.

   Do the door lock actuators work normally?

   YES—Go to step 8.

   NO—Check for a poor ground and/or an open in the wire between the immobilizer-keyless control unit 7P connector No. 7 terminal and body ground (G101). ■
8. Turn the ignition switch ON (II).
9. Back probe and measure voltage between the immobilizer-keyless control unit 7P connector No. 2 terminal and body ground.

IMMOBILIZER-KEYLESS CONTROL UNIT 7P CONNECTOR

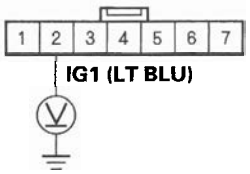

Wire side of female terminals

Is there battery voltage?

YES—Go to step 10.

NO—Check for a blown No. 2 (15 A) fuse in the under-dash fuse/relay box. If the fuse is OK, repair open in the LT BLU wire between the under-dash fuse-relay box and the immobilizer-keyless control unit. ■

10. Back probe and measure voltage between the immobilizer-keyless control unit 7P connector No. 7 terminal and body ground.

IMMOBILIZER-KEYLESS CONTROL UNIT 7P CONNECTOR

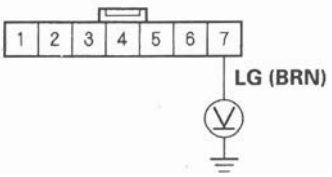

Wire side of female terminals

Is there 0.5 V or more?

YES—Repair poor connection or open between the immobilizer-keyless control unit 7P connector No. 7 terminal and G101. ■

NO—Replace the immobilizer-keyless control unit. ■

Symptom Troubleshooting (cont'd)

Engine does not start with the immobilizer key

NOTE: Before troubleshooting, check the items listed in "General Check before Troubleshooting" (see page 22-292).

1. Turn the ignition switch OFF.
2. Turn the ignition switch ON (II), and check the immobilizer indicator.

   Does the indicator quickly flash once?

   YES—Go to step 3.

   NO—Go to step 6.
3. Turn the ignition switch to START (III).

   Does the starter motor run?

   YES—Go to step 4.

   NO—Go to Starting System, and check the starter motor.■
4. Try to start the engine with the immobilizer key.

   Does the engine start?

   YES—Go to step 5.

   NO—Go to the PGM-FI System Symptom Troubleshooting.■
5. Wait for a few minutes with the engine running.

   Does the engine stop?

   YES—Go to the PGM-FI System Symptom Troubleshooting.■

   NO—The system is OK at this time.■
6. Check to see if the immobilizer indicator comes on and blinks.

   Does the indicator blink?

   YES—Go to step 12.

   NO—Go to step 7.
7. Disconnect the 7P connector from the immobilizer-keyless control unit. Wait for a few minutes with the engine running
8. Check to see if the immobilizer indicator goes off.

   Does the indicator go off?

   YES—Substitute a known-good immobilizer-keyless control unit and/or PCM, then register it and recheck.

   NO—Go to step 9.
9. Turn the ignition switch OFF.
10. Disconnect the gauge control module 36P connector (see page 22-248).
11. Check for continuity between the immobilizer-keyless control unit 7P connector No. 4 terminal and body ground.

IMMOBILIZER-KEYLESS CONTROL UNIT 7P CONNECTOR

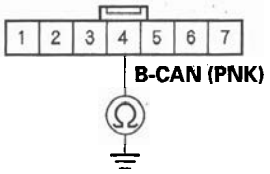

Wire side of female terminals

Is there continuity?

YES— Repair a short to ground in the PNK wire.■

NO—Faulty immobilizer indicator; replace the gauge control module (see page 22-248).

12. Turn the ignition switch OFF.
13. Jump the SCS with the HDS.
14. Disconnect the PCM connector A (44P).
15. Check for continuity between the immobilizer-keyless control unit 7P connector No. 3 terminal and body ground.

IMMOBILIZER-KEYLESS CONTROL UNIT 7P CONNECTOR

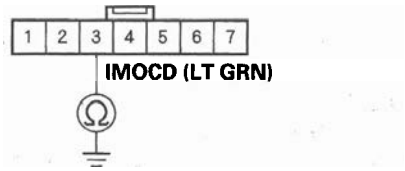

Wire side of female terminals

Is there continuity?

YES—Repair a short to ground in the LT GRN wire.■

NO—Substitute a known-good immobilizer-keyless control unit and/or PCM, then register it and recheck.

Immobilizer indicator does not go off

1. Turn the ignition switch OFF.
2. Connect the HDS to the data link connector.
3. Turn the ignition switch ON (II).
4. Enter the IMMOBILIZER, then select the IMMOBILIZER INFORMATION.
5. Do the SYSTEM CHECK with the HDS.

Is N-1 OK indicated?

YES—Replace the gauge control module.■

NO—Substitute a known-good immobilizer-keyless control unit, then register it and recheck. If the symptom goes away, replace the original immobilizer-keyless control unit.■

System Check

1. Connect the HDS to the data link connector.
2. Turn the ignition switch ON (II).
3. Monitor the System Check in the Immobilizer Info with the HDS.
4. If the HDS displays the "Normal", the immobilizer system is OK. If the HDS displays any other messages, check as follows:

System Check No.	Status Log. Indication	System Check	Possible Cause
A-1	Possible	The key is not registered	• This key is not registered in the immobilizer-keyless control unit. Try to register keys using the HDS. No communication between the antenna and the immobilizer key metal such as key chains/key rings/ other keys. Low battery voltage.
A-2	Possible	Communication error between the key and immobilizer unit	• Intermittent interruption between transponder and immobilizer-keyless control unit. • The immobilizer key type is incorrect non-Honda key. • Key failure (transponder failure) • No communication between the antenna and the immobilizer key by influence of metal such as key chains/key rings/other keys. • Low battery voltage.
A-3	Possible	No communication between the key and immobilizer unit	• The ignition switch was turned on with a non-immobilizer key. • The immobilizer key type is incorrect non-Honda key. Key failure (transponder failure) • No communication between the antenna and the immobilizer key by influence of metal such as key chains/key rings/other keys. • Low battery voltage. • Immobilizer-keyless control unit failure
B-1	Possible	The ECM/PCM is not registered	• The PCM was not registered. Try to register the PCM using the HDS. • No communication between the PCM and the immobilizer-keyless control unit because of low battery voltage. • No communication between the immobilizer-keyless control unit and the PCM because of interference. • Open in the IG1 line
B-2	Possible	Error of communication format in ECM/PCM	• The PCM was not registered. Try to register the PCM using the HDS. • No communication between the PCM and the immobilizer-keyless control unit because of low battery voltage. • No communication between the immobilizer-keyless control unit and the PCM because of interference.

System Check No.	Status Log. Indication	System Check	Possible Cause
C-1	Possible	No registration of Imoes Unit	• Imoes unit was not registered. • No communication between the Imoes unit and the immobilizer control unit-receiver because of low battery voltage. • No communication between the Imoes unit and the immobilizer control unit-receiver because of interference.
C-2	Possible	Error of communication format in Imoes Unit	• Imoes unit was not registered. • No communication between the Imoes unit and the immobilizer control unit-receiver because of low battery voltage. • No communication between the Imoes unit and the immobilizer control unit-receiver because of interference.
D-1	Possible	S-net line short	• Harness short from the PCM to the immobilizer-keyless control unit. (IMOCD (S-net) line short) • No communication between the PCM and the immobilizer-keyless control unit because of low battery voltage. • No communication between the immobilizer-keyless unit and the PCM because of interference. • Immobilizer unit failure • PCM failure
D-2	Possible	No communication between Imoes unit and Immobilizer Unit	• Blown fuse • Harness open from the Imoes unit to the immobilizer-keyless control unit. (IMOCD (S-net) line open) • No communication between the Imoes unit and the immobilizer-keyless control unit because of low battery voltage. • No communication between the Imoes unit and the immobilizer-keyless control unit because of interference. • Immobilizer-keyless control unit failure • Imoes unit failure
D-3	Possible	No communication between ECM/PCM and Immobilizer Unit	• Blown fuse • Harness open from the PCM to the immobilizer-keyless control unit. • No communication between the PCM and the immobilizer-keyless control unit because of low battery voltage. • No communication between the immobilizer-keyless control unit and the PCM because of interference. • Immobilizer-keyless control unit failure • PCM failure
E-1 E-2 E-3 E-4 E-5	———	Initial registration of Immobilizer Unit is not completed	The immobilizer-keyless control unit is not registered. Try to register the immobilizer-keyless control unit using the HDS.
F-1 F-2 F-3 F-4 F-5	———	Special Mode	Turn the ignition switch ON (II) and OFF with the registered key.

Immobilizer-keyless Control Unit Input Test

NOTE: Before testing, troubleshoot the B-CAN System Diagnosis Test Mode A (see page 22-92), and check the No. 23 (10 A) fuse in the under-hood fuse/relay box and the No. 10 (7.5 A) fuse in the under-dash fuse/relay box.

1. Remove the driver's dashboard lower cover (see page 20-101).
2. Remove the steering column covers (see page 20-107).
3. Disconnect the 7P connector (A) from the immobilizer-keyless control unit (B).

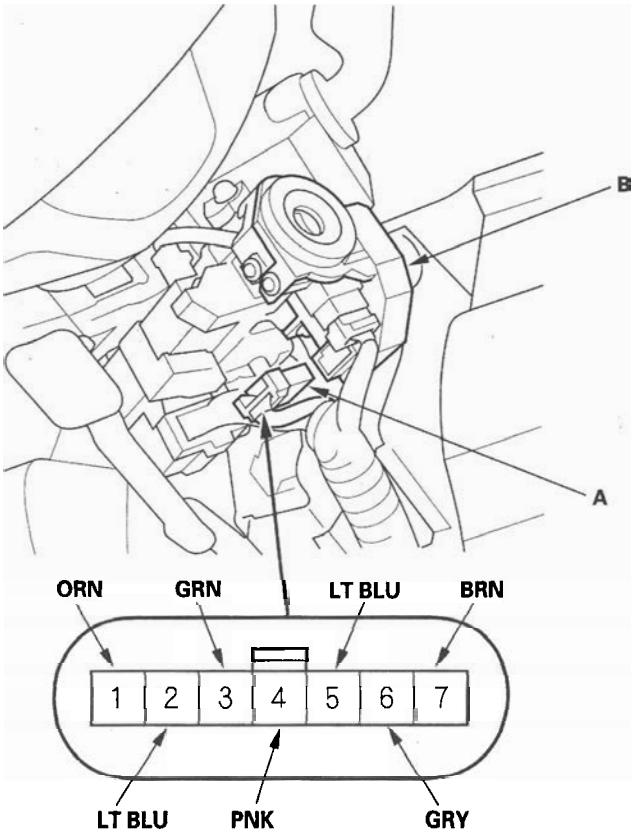

Wire side of female terminals

4. Inspect the connector and socket terminals to be sure they are all making good contact.
   - If the terminals are bent, loose or corroded, repair them as necessary, and recheck the system.
   - If the terminals look OK, go to step 5.

5. With the connector still disconnected, make these input tests at the connector.

   • If any test indicates a problem, find and correct the cause, then recheck the system.
   • If all the input tests prove OK, go to step 6.

Cavity	Wire	Terminal name	Test condition	Test: Desired result	Possible cause if result is not obtained
3	GRN	S-NET (IMOCD)	Under all conditions	Check for continuity between the No. 3 terminal and the PCM connector A (44P) No. 44 terminal: There should be continuity.	• An open in the wire • Faulty under-dash fuse/relay box • Bad connection at under-dash fuse/relay box connectors F or R
				Check for continuity between the No. 3 terminal and body ground: There should be no continuity.	• A short to ground in the wire • Faulty under-dash fuse/relay box • Faulty Imoes unit circuit built in the MICU
4	PNK	B-CAN	Under all conditions	Check for continuity between the No. 4 terminal and the gauge control module 36P connector No. 20 terminal, and under-dash fuse/relay box connector Q (16P) No. 6 terminal: There should be continuity.	An open in the wire
				Check for continuity between the No. 4 terminal and body ground: There should be no continuity.	A short to ground in the wire

6. Reconnect the connector, and make these input tests at the connector.

   • If any test indicates a problem, find and correct the cause, then recheck the system.
   • If all the input tests prove OK, replace the immobilizer-keyless control unit.

   NOTE: After replacing the immobilizer-keyless control unit, do the immobilizer registration (see page 22-302).

Cavity	Wire	Terminal name	Test condition	Test: Desired result	Possible cause if result is not obtained
1	ORN	VBU	Under all conditions	Check for voltage to ground: There should be battery voltage.	• Blown No. 23 (10 A) fuse in the under-hood fuse/relay box • An open in the wire
2	LT BLU	IG1	Ignition switch ON (II)	Check for voltage to ground: There should be battery voltage.	• Blown No. 2 (15 A) fuse in the under-dash fuse/relay box • An open in the wire
6	GRY	IG KEY SW	Ignition key inserted into the ignition switch	Check for voltage to ground: There should be less than 1 V.	• Poor ground (G501) • Faulty ignition key switch • An open in the wire
7	BRN	LG	Under all conditions	Check for voltage to ground: There should be less than 0.5 V.	• Poor ground (G101) • An open in the wire

Immobilizer Key Registration

NOTE:
- The HDS is required for registration of the immobilizer keys.
- Programming the immobilizer also programs the keyless transmitter.
- Check for aftermarket electrical equipment that can cause problems with transponder operation.
- The immobilizer control unit-receiver can store up to six immobilizer Keys.

Add one new key/Keyless transmitter

1. Have a registered key, a new immobilizer key, and the first password from the iN system.
2. Connect the HDS to the data link connector.
3. Turn the ignition switch ON (II).
4. Select "IMMOBILIZER" from the "SYSTEM SELECT" menu.
5. Select "Add and Delete keys", then "Add 1 key".
6. Do the registration according to the instructions on the HDS screen.
7. Check if the engine can be started by the newly registered key.

Add and Delete keys/Keyless transmitters, Then select Delete or Add keys

1. Have all registered keys, all new keys, and the first password.
2. Connect the HDS to the data link connector.
3. Turn the ignition switch ON (II).
4. Select "IMMOBILIZER" from the "SYSTEM SELECT" menu.
5. Select "Add and Delete Keys", or "Delete or Add Multiple Keys".
6. Do the registration according to the instruction of HDS screen.
7. Check if the engine can be started by all the registered keys.

All keys are lost

1. Prepare all new keys and have the immobilizer PCM code.
2. Connect the HDS to the data link connector.
3. Turn the ignition switch ON (II).
4. Select "IMMOBILIZER" from the "SYSTEM SELECT" menu.
5. Select "Add and Delete keys", then "ALL KEYS LOST".
6. Do the registration according to the instruction of HDS screen.
7. Check if the engine can be started by all the registered keys.

Immobilizer-keyless Control Unit Replacement

1. Remove the driver's dashboard lower cover (see page 20-101).
2. Remove the steering column covers (see page 20-107).
3. Disconnect the 7P connector (A) from the immobilizer-keyless control unit (B).

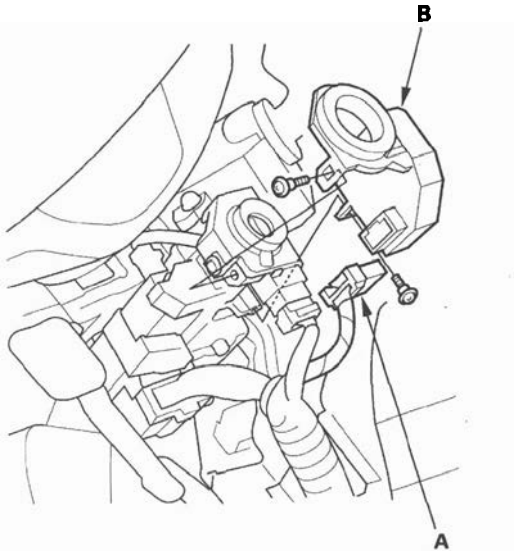

4. Remove the two screws and the immobilizer-keyless control unit.
5. Install the immobilizer-keyless control unit in the reverse order of removal.
6. After replacement, register the immobilizer-keyless control unit (see page 22-302), and make sure the immobilizer system works properly.
7. Program all of the customer's keyless transmitters (see page 22-302).

SUPPLEMENTAL RESTRAINT SYSTEM (SRS) (If Audio, Navigation, and Telematics maintenance is required)

The CR-V SRS includes a driver's airbag in the steering wheel hub, a passenger's airbag in the dashboard above the glove box, seat belt tensioners in the front seat belt retractors, seat belt buckle tensioners in the front seat belt buckles, side curtain airbags in the sides of the roof, and side airbags in the front seat-backs. Information necessary to safely service the SRS is included in this Service Manual. Items marked with an asterisk (*) on the contents page include or are located near SRS components. Servicing, disassembling, or replacing these items require special precautions and tools, and should be done only by an authorized Honda dealer.

- To avoid rendering the SRS inoperative, which could lead to personal injury or death in the event of a severe frontal or side collision, all SRS service work should be done by an authorized Honda dealer.
- Improper service procedures, including incorrect removal and installation of the SRS, could lead to personal injury caused by unintentional deployment of the airbags and/or side airbags.
- Do not bump or impact the SRS unit, front impact sensors, or side impact sensors when the ignition switch is ON (II), or for at least 3 minutes after the ignition switch is turned OFF; otherwise, the system may fail in a collision, or the airbags may deploy.
- SRS electrical connectors are identified by yellow color coding. Related components are located in the steering column, front console, dashboard, dashboard lower panel, in the dashboard above the glove box, in the front seats, in the roof side, and around the floor. Do not use electrical test equipment on these circuits.

Audio, Navigation, and Telematics

Special Tools 23-2

Audio System

Component Location Index 23-3
Symptom Troubleshooting Index 23-4
System Description 23-6
Circuit Diagram 23-22
Self-diagnostic Function 23-28
Error Codes 23-30
Symptom Troubleshooting 23-32
Sound Quality Diagnosis 23-70
* Audio Unit Removal/Installation 23-76
Stereo Amplifier Removal/Installation 23-78
XM Receiver Removal/Installation 23-78
Audio Disc Changer Removal/Installation 23-79
Speaker Test/Replacement 23-79
Auxiliary Jack Assembly Replacement 23-81
* Audio Remote Switch Test 23-82
Audio Remote Switch Replacement 23-82
AM/FM/XM Antenna Replacement 23-83
AM/FM Antenna Replacement 23-83

Navigation System

Component Location Index 23-84
General Troubleshooting Information 23-85
Symptom Troubleshooting Index 23-88
System Description 23-90
Circuit Diagram 23-108
Symptom Troubleshooting 23-109
System Diagnostic Mode 23-122
CD, DVD, and PC Card Removal/Installation 23-139
* Navigation Unit Removal/Installation 23-140
* Voice Control Switch Test 23-141
Voice Control Switch Replacement 23-141
Microphone Replacement 23-142
Rearview Camera Removal/Installation 23-142
GPS Antenna Removal/Installation 23-143



Special Tools

Ref. No.	Tool Number	Description	Qty
①	07AAZ-SDBA100	Diagnostics CD	1
②	07AAZ-SDBA200 (ABEX-TCD-725B)	Skip Test CD	1
③	07AAZ-SDBA300 (ABEX-TCD-721)	Skip Test CD	1

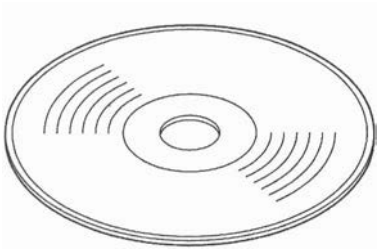

①, ②, ③

Component Location Index

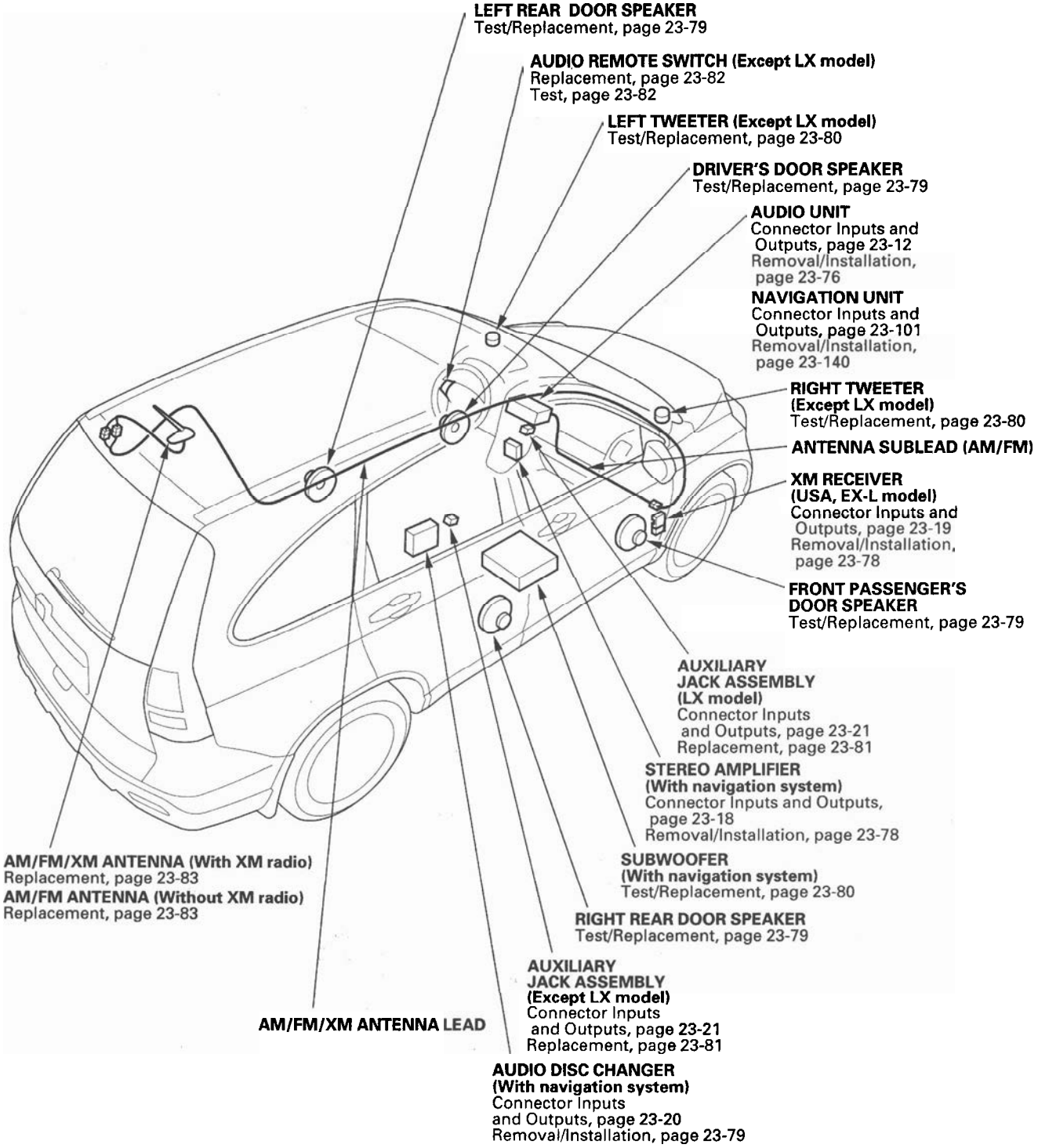

Symptom Troubleshooting Index

Symptom	Diagnostic procedure	Also check for
Poor AM or FM radio reception or interference (with navigation)	Symptom Troubleshooting (see page 23-32)	Antenna lead (sub or main) short or open in the wire
Poor AM or FM radio reception or interference (without navigation)	Symptom Troubleshooting (see page 23-35)	Antenna lead (sub or main) short or open in the wire
Power switch will not turn ON (No information display and no sound) (with navigation)	Symptom Troubleshooting (see page 23-38)	
Power switch will not turn ON (No information display and no sound) (without navigation)	Symptom Troubleshooting (see page 23-39)	
Power will not turn OFF (with navigation)	Symptom Troubleshooting (see page 23-40)	
Power will not turn OFF (without navigation)	Symptom Troubleshooting (see page 23-41)	
No sound is heard from speaker(s) (display is normal) (with navigation)	Symptom Troubleshooting (see page 23-41)	
No sound is heard from speaker(s) (display is normal) (without navigation)	Symptom Troubleshooting (see page 23-45)	
Audio system sound is weak or distorted (display is normal)	Symptom Troubleshooting (see page 23-47)	
Radio preset memory is lost	Symptom Troubleshooting (see page 23-47)	
Volume does not change	Symptom Troubleshooting (see page 23-48)	
Volume does not increase with speed	Symptom Troubleshooting (see page 23-49)	
Volume is too high or too low when driving at freeway speeds	Symptom Troubleshooting (see page 23-50)	
Radio tuner does not change stations	Symptom Troubleshooting (see page 23-50)	
Display does not dim or brighten with dimmer (without navigation)	Symptom Troubleshooting (see page 23-51)	
Navigation unit button illumination does not work (with navigation)	Symptom Troubleshooting (see page 23-52)	
Audio unit button illumination does not work (without navigation)	Symptom Troubleshooting (see page 23-53)	
Audio remote switch does not work properly	Symptom Troubleshooting (see page 23-54)	
Audio disc does not load	Symptom Troubleshooting (see page 23-57)	
Audio disc does not eject	Symptom Troubleshooting (see page 23-57)	
Audio disc cannot be inserted and/or ejected (with navigation)	Symptom Troubleshooting (see page 23-58)	
Audio disc does not play	Symptom Troubleshooting (see page 23-58)	
Audio disc skips	Symptom Troubleshooting (see page 23-59)	Tire pressure (over inflated), disc smudged, dirty, or scratched

Symptom	Diagnostic procedure	Also check for
Poor or no sound with audio disc changer (with navigation)	Symptom Troubleshooting (see page 23-60)	
PC card will not play/card icon on audio screen cannot be selected (with navigation)	Symptom Troubleshooting (see page 23-62)	
Error code: XM NO SIGNAL or XM ANTENNA is displayed	Symptom Troubleshooting (see page 23-63)	Disconnected XM antenna lead
XM radio display is blank and no station information is displayed	Symptom Troubleshooting (see page 23-64)	
XM radio preset memory is lost	Symptom Troubleshooting (see page 23-67)	
Poor or no sound with XM radio (navigation unit can display XM channels) (with navigation)	Symptom Troubleshooting (see page 23-68)	
XM radio does not change channels in order	XM radio is in the category mode. See the owner's manual to select the channel mode.	
XM radio only tunes to channels 000, 001, 174, and 247	XM receiver has been deactivated. Call XM listener cave to verify the account status.	

System Description

Overview

The audio unit acts as the "processor" for all audio functions. Select audio functions from the audio unit, the audio remote (on the steering wheel), or by using the navigation voice control system. The audio display provides the current audio status. For vehicles with navigation, additional audio information is available by touching the audio button on the Navigation Audio Screen. (See the owner's manual and the navigation system manual for more details.)

The XM receiver and audio disc changer passes its signal to the audio unit. In addition, it communicates with the audio unit via the GA-Net bus. Any open connections in the GA-Net bus circuit will cause audio and navigation functions to appear inoperative.

For vehicles with navigation, pressing the "open/close" switch on the navigation display panel allows access to the CD slot and PC card.

A security signal is daisy-chained between the audio and vehicle components for integration into the vehicle's security system.

Speed-sensitive volume compensation (SVC)
Some audio systems are equipped with speed-sensitive volume compensation (SVC). The navigation or audio unit receives the vehicle speed pulse (VSP) from the ECM/PCM. The system processes the speed input and increases the navigation or audio system volume level as the vehicle speed increases to compensate for the various interior noise that occurs at higher speeds. When the vehicle slows down, the volume returns to its normal level. The SVC has four settings: SVC OFF, LOW, MID and HIGH that can be adjusted using the navigation or audio unit. The SVC comes from the factory with MID set as the default.

To change the audio unit SVC setting, press the "tune folder sound" knob repeatedly until the SVC is displayed, then rotate the knob to adjust the SVC to the desired setting (SVC OFF, LOW, MID, or HIGH)

To change the navigation unit SVC setting, press the AUDIO button, and then select the SOUND icon on the navigation display. Press the navigation display to select the desired setting (OFF, LOW, MID, HI)

The navigation system allows voice control for the audio, XM, PC card, and CD player. The GA-Net (audio unit) communicates the voice control commands. When using the TALK/BACK button, the audio is muted on all speakers and you hear navigation sound on the front channels. When using the navigation or route guidance (RG), the front speakers provides the navigation sound and the rear speakers continue to play. For more information, see the navigation section. The outline of the interruption function is shown in this table.

Contents	Audio output				
	Left front CH	Right front CH	Right rear CH	Left rear CH	Subwoofer CH
TALK/BACK Buttons	Navigation voice output	Navigation voice output	Muted	Muted	Muted
Route guidance	Navigation voice output	Navigation voice output	Audio	Audio	Audio

GA-Net Bus Configuration

The GA-Net bus passes audio and navigation commands throughout the navigation and audio components. These commands include navigation touch screen and hard button signals, audio/XM selections by voice, and XM station and music title names. Because the entire bus is daisy-chained between components (see diagram), any open or short in the GA-Net bus harness will cause any or all of these functions to become inoperative. The addition of any audio accessory must maintain the continuity of the GA-Net bus by installing the "Y" cable included with the accessory kit.

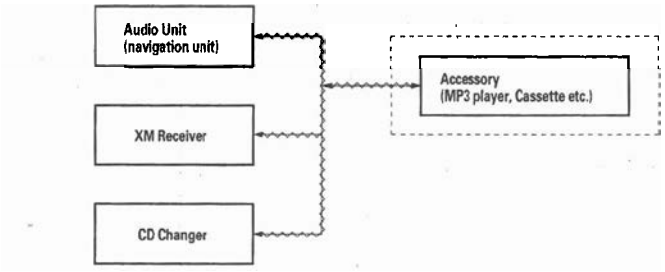

(cont'd)

System Description (cont'd)

With navigation

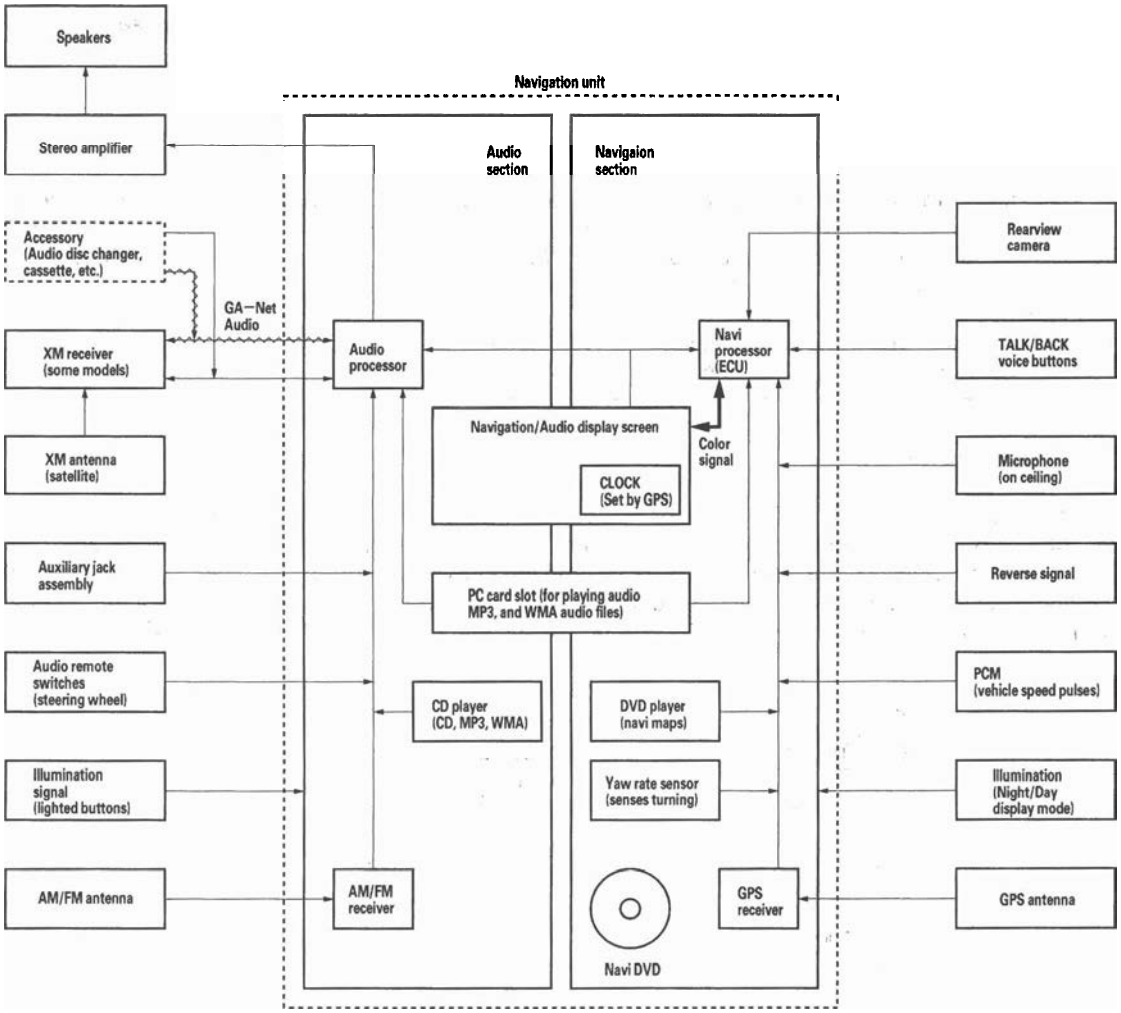

NOTE: All items may not apply to this vehicle. See the owner's manual for more information.

Audio Glossary

Item	Definition
Active noise control	The active noise control system cancels some of the vehicle noise. This occurs in the 1,500—2,400 rpm range. Microphones detect the low frequency sound, and the system outputs a cancelling sound from the audio speaker.
AM (amplitude modulation)	The type of transmission used in the standard radio broadcast band from 530 to 1,705 kHz.
Amplifier	A device that increases the level of a signal by increasing the current or voltage.
Antenna	A device used to send or receive electromagnetic waves through the air.
ATA (PC card)	A type of card that has been tested for use in playing WMA and MP3 music files in the PC card slot. Sizes of up to 1 GB have been tested.
Audio remote switch	The switches on the steering wheel that control the audio system.
Auxiliary jack	Allows the customer to use a portable audio device to input music recordings.
Balance	A control that changes the relative volume of the left and right channels.
Band	A range of frequencies between two definite limits. Bands are assigned by the Federal Communications Commission for specific uses.
Bass	An adjustment for the low frequency sounds of around 160 Hz and below.
Byte	A unit of storage for computer files and memory. A CD holds approximately 700 million bytes.
Cassette	Audio or video magnetic tape container having two reels. Customers can insert it for recording or play back.
Compact flash	A standard for small-size (3 x 4 cm) , memory cards used in mobile computers, PDAs, digital cameras. Compact flash memory cards are available in size of 32 Mb up to 4 GB or more and can be played in the audio PC slot. Sizes above 1 GB have not been tested.
CD (compact disc)	A 4.5-inch plastic disc containing digital audio recording that is played optically on a laser equipped player. Never use discs with a paper label. In a hot car, labels can curl up and jam the unit.
CD (audio disc) changer	CD player that can store and play more than one CD. Two types are available. Some units accept CDs fed into the changer one at a time, and others accept a magazine (with CD's stacked in a container).
CD player	A component designed to play compact disc CD recording using a laser optical pickup. The signal from a CD player usually requires amplification.
CSF (cold start fix) screens	These screens are displayed if the system requires a GPS initialization. The vehicle should be moved outside into an open area away from buildings/power lines.
Distortion	Inexact reproduction of an audio signal caused by playing music at levels the audio system cannot handle.
Dolby (noise reduction)	A processing system developed by Dolby Laboratories that reduces the background noise on recoding media. The result is a clearer playback from the audio system.
DVD (digital versatile disc)	A 4.5-inch CD-like format used for storing movies with digital audio and video features. The DVD-A format is a DVD format designed for DVD audio systems. Some vehicles can play DVD and DVD-A formats.
Equalizer	A device that changes the relative volume of individual frequency bands to suit personal tastes of the listener.
Fader	The control that adjusts the relative volume levels of front and rear speakers in a four-speaker system.
Format	To prepare a PC card to receive files. This function is done on a PC. Always choose either FAT or FAT32 as the format type-NTSF format is not accepted by the system. Pick the default sectors for the format method selected.

(cont'd)

System Description (cont'd)

Audio Glossary

Item	Definition
FM (frequency modulation)	The form of modulation used for radio and television sound transmission in most of the world. Less prone to interference than AM. The FM broadcast band covers roughly 87 to 108 MHz.
GB (gigabyte)	A unit of memory or disk storage equal to one billion bytes (1000 million bytes).
HDD	Abbreviation for hard disc drive. They are sensitive to heat and it is not recommended that they be used in the PC card slot for playing audio files.
Hertz (HZ)	The unit of frequency equal to one cycle per second (cps). One kilohertz (kHz) equals 1,000 cps; one megahertz (MHz) equals 1 million cps.
Integrated amplifier	A component that combines a pre amp and a power amp into a single unit. A receiver combines an integrated amp and a tuner into a single unit.
Jewel case	The hard plastic case that contains a compact disc or DVD. Always use a jewel case to prevent scratches on the underside of a CD or DVD.
LCD (liquid crystal display)	A type of digital display that changes reflectance or transmittance when an electrical field is applied to it.
Memory	Circuitry or devices that hold information in electrical or magnetic form, such as the AM/FM radio presets.
Megabyte (M byte)	One million bytes. Written as 1 Mb. Megabytes are used s a measure of digital storage space. For example, a CD can hold 650 Mb.
Mic	An abbreviation for microphone. For vehicles with navigation, the microphone accepts navigation voice commands to control audio and navigation functions.
MP3 music files	MP3 is an audio coding format. MP3 is a popular audio compression format on the Internet and computers. CDs, and PC card with these files can be played some this vehicle's audio system.
Mute	When the navigation gives guidance, the front speakers are muted (no music). When you use the voice control system, all of the speakers are muted.
Noise	Unwanted random sounds like buzzing, hiss, pops, static, whine, etc.
PC card	The slot used for playing MP3 and WMA music files. The PC card is usually a combination of a small flash card in a PCMCIA adaptor that slides into the slot. The ATA, SD, and compact flash types of cards have been tested up to 1 GB.
PCMCIA	A computer standard for the slot that the PC card slides into. Another term for the PC card slot.
Processor	The part of an audio device that performs task/calculations. In the audio unit the processor handles muting to allow the navi to speak voice commands, and the decoding/playback of the sound files etc.
Radio	A head unit that combines a tuner, a preamplifier, and often a power-amplifier.
Stereo	A recording of at least two channels where you can hear sound or music from the left or right side.
SD (secure digital) card	This compact type of memory card allows for fast data transfer and has built-in security functions. SD cards have a small write-protection switch on the side.
Shield	A metallic foil or braided wire layer surrounding conductors which are designed to prevent electrostatic or electromagnetic interference (noise) from external sources such as buzzing or popping sounds from being heard through the speakers.
Speaker (Loudspeaker)	A device that converts electrical energy into acoustical energy (sound).
Speed-sensitive volume compensation (SVC)	The SVC increases the audio volume to compensate for increased interior noise when the vehicle drives at freeway speeds.
Sub-woofer	A loudspeaker made to reproduce the lowest audio frequencies, approx 25 Hz to 125 Hz.

Audio Glossary

Item	Definition
Track	A sound recording on a CD, tape, or PC card.
Treble	An adjustment for the high frequency sounds of around 2.5 kHz to 20 kHz.
Tuner	A component (or part of a component) that receives radio signals and selects one broadcast from many.
Tweeter	A speaker designed to reproduce the higher frequencies (treble) only.
Voice coil	A coil of wire wrapped around a tube and then attached to the speaker cone or diaphragm. When an audio signal is applied, the coil becomes an electromagnet and interacts with the permanent magnet causing the cone or diaphragm to vibrate. We interpret this vibration as sound.
Volume control	Allows you to control the loudness of the music.
WMA music file	Windows Media Audio File. This is an accepted format for music files to be played on either a CD or a PC card.
Woofer	A speaker that is designed to reproduce bass frequencies only.
XM radio	Satellite based radio transmission, which also uses a ground based repeater network to ensure seamless reception. The channels originate from XM's broadcast center, in Washington, DC, and uplink to two satellites. These satellites transmit the signal across the entire continental United States.
XM receiver	The external component that receives and processes the XM signals from the XM satellites, and terrestrial (land) stations. The audio unit communicates to the XM receiver over the GA-Net bus.

(cont'd)

System Description (cont'd)

Audio Unit Connector for Inputs and Outputs

With navigation

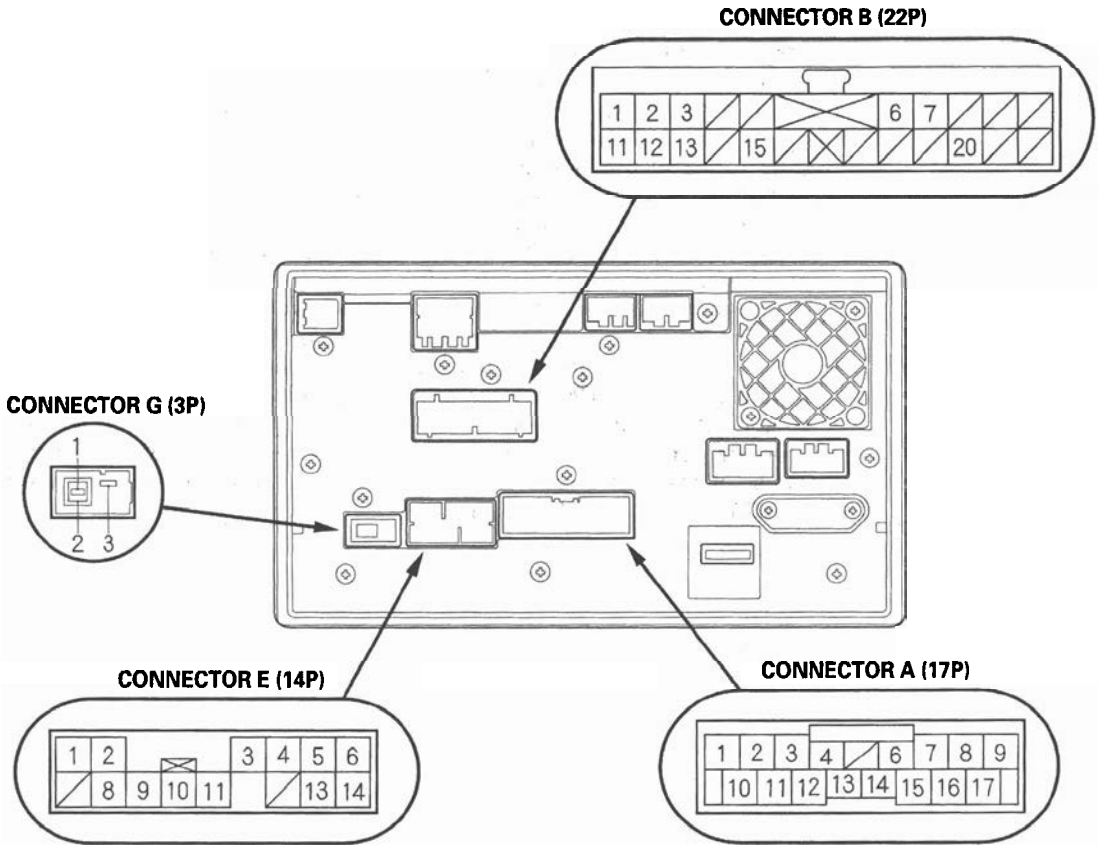

Without navigation, with XM radio

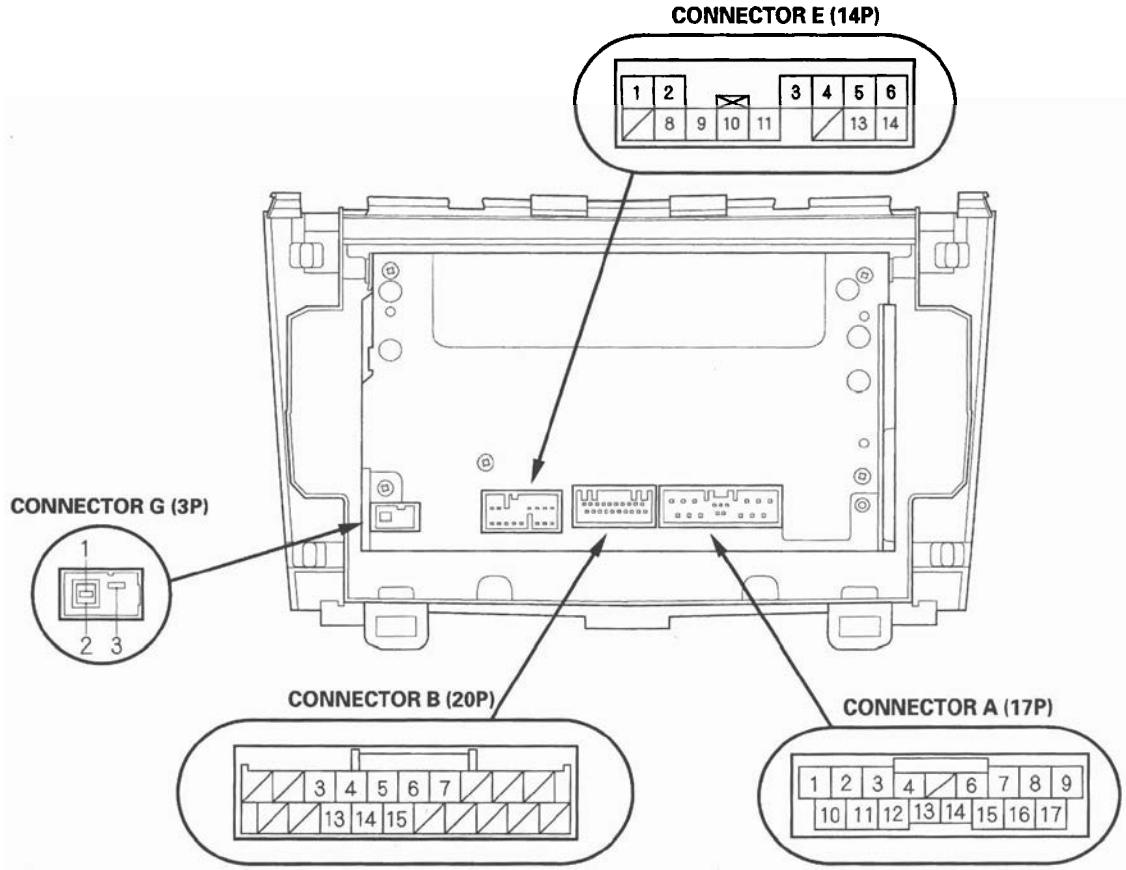

Without navigation, 1DIN audio unit type

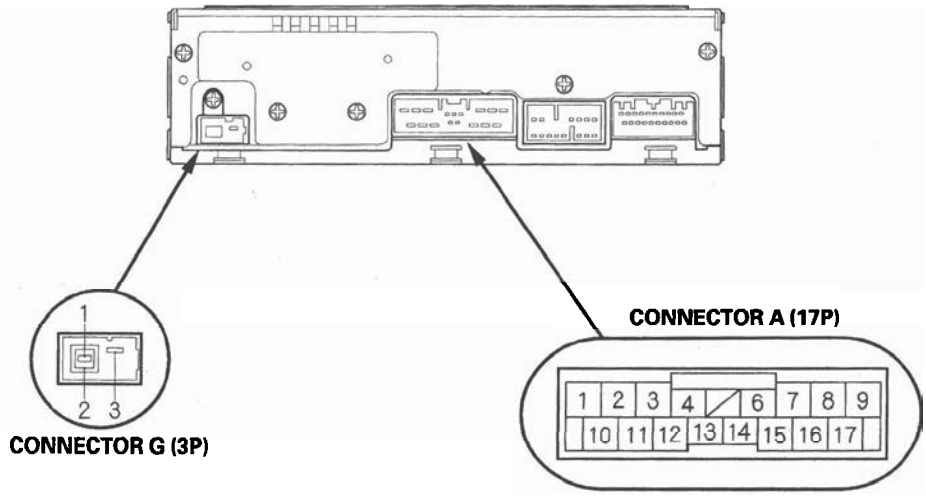

(cont'd)

System Description (cont'd)

Audio Unit Connector A (17P)

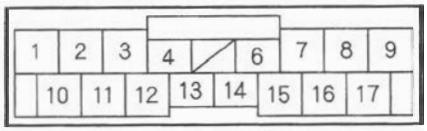

Terminal side of male terminals

With navigation

Cavity	Wire	Connects to
A1	RED	Dash lights brightness controller (ILL+)
A2	PUR	Stereo amplifier (RL SIG−)
A3	GRN	Stereo amplifier (FL SIG−)
A4	GRN	Multiplex integrated control unit (MICU) (SCTY RADIO)
A5	———	Not used
A6	LT BLU	Multiplex integrated control unit (MICU) (K-LINE)
A7	YEL	Stereo amplifier (FR SIG−)
A8	PNK	Stereo amplifier (RR SIG−)
A9	BLK	Ground (G504)
A10	GRY	Lights-on signal
A11	LT GRN	Stereo amplifier (RL SIG+)
A12	RED	Stereo amplifier (FL SIG+)
A13	BLU	PCM (VSP)
A14	WHT	Multiplex integrated control unit (MICU), Stereo amplifier (ACC RADIO) (Fuse No. 34 (7.5 A) in the under-dash fuse/relay box)
A15	BRN	Stereo amplifier (FR SIG+)
A16	BLU	Stereo amplifier (RR SIG+)
A17	LT GRN	Constant power (Fuse No. 23 (10 A) in the under-hood fuse/relay box)

Without navigation

Cavity	Wire	Connects to
A1	RED	Dash lights brightness controller (ILL+)
A2	BRN	Left rear speaker (RR L−)
A3	GRN	Driver's door speaker, Left tweeter (FR L−)
A4	GRN	Multiplex integrated control unit (MICU) (SCTY RADIO-G504)
A5	———	Not used
A6	LT BLU	Multiplex integrated control unit (MICU) (K-LINE)
A7	YEL	Front passenger's door speaker, Right tweeter (FR R−)
A8	ORN	Right rear speaker (RR R−)
A9	BLK	Ground (G504)
A10	GRY	Lights-on signal
A11	GRY	Left rear speaker (RR L+)
A12	LT GRN	Driver's door speaker, Left tweeter (FR L+)
A13	BLU	PCM (VSP)
A14	WHT	Multiplex integrated control unit (MICU) (ACC RADIO)
A15	WHT	Front passenger's door speaker, Right tweeter (FR R+)
A16	BLU	Right rear speaker (RR R+)
A17	ORN	Constant power

Audio Unit Connector B (22P) (with navigation)

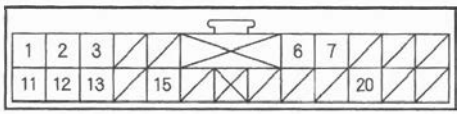

Terminal side of male terminals

With navigation

Cavity	Wire	Connects to
B1	BLK	Auxiliary jack assembly (AUX SGND)
B2	GRY	Auxiliary jack assembly (AUX SHIELD GND)
B3	PNK	Auxiliary jack assembly (AUX GND)
B4	———	Not used
B5	———	Not used
B6	BRN	Audio remote switch (AUDIO REMOTE GND)
B7	PNK	Audio remote switch (AUDIO REMOTE SW)
B8	———	Not used
B9	———	Not used
B10	———	Not used
B11	WHT	Auxiliary jack assembly (AUX L)
B12	RED	Auxiliary jack assembly (AUX R)
B13	LT BLU	Auxiliary jack assembly (AUX DET)
B14	———	Not used
B15	BLK	Ground (G502)
B16	———	Not used
B17	———	Not used
B18	———	Not used
B19	———	Not used
B20	RED	Stereo amplifier (AMP ON)
B21	———	Not used
B22	———	Not used

Audio Unit Connector B (20P) (without navigation)

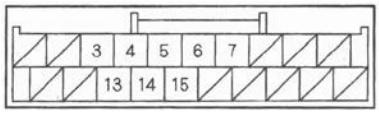

Terminal side of male terminals

Without navigation

Cavity	Wire	Connects to
		Not used
		Not used
	RED*1	Auxiliary jack assembly (AUX SGND)
	BLK*2	
	GRY*2	Auxiliary jack assembly (AUX SHIELD GND)
B5	GRN*1	Auxiliary jack assembly (AUX GND)
	PNK*2	
B6	BRN*2	Audio remote switch (AUDIO REMOTE GND)
B7	PNK*2	Audio remote switch (AUDIO REMOTE SW)
B8	———	Not used
B9	———	Not used
B10	———	Not used
B11	———	Not used
B12	———	Not used
B13	WHT	Auxiliary jack assembly (AUX L)
B14	BLK*1	Auxiliary jack assembly (AUX R)
	RED*2	
B15	LT BLU	Auxiliary jack assembly (AUX DET)
B16	———	Not used
B17	———	Not used
B18	———	Not used
B19	———	Not used
B20	———	Not used

* 1: LX model
* 2: Except LX model

(cont'd)

System Description (cont'd)

Audio Unit Connector C (12P)

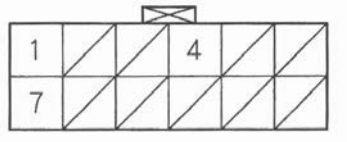

Wire side of female terminals

With navigation

Cavity	Wire	Connects to
C1	WHT	Constant power
C2	———	Not used
C3	———	Not used
C4	BLK	Ground (G502)
C5	———	Not used
C6	———	Not used
C7	BRN	Multiplex integrated control unit (BACK LT—)
C8	———	Not used
C9	———	Not used
C10	———	Not used
C11	———	Not used
C12	———	Not used

Audio Unit Connector E (14P)

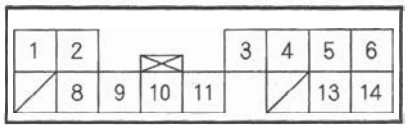

Terminal side of male terminals

With navigation (USA, EX-L model)

Cavity	Wire	Connects to
E1	ORN	XM receiver, audio disc changer (+B)
E2	PUR	XM receiver, audio disc changer (SYS ACC)
E3	GRY	XM receiver, audio disc changer (BUS SHIELD GND (GA-NET))
E4	GRY	XM receiver, audio disc changer (SHIELD GND)
E5	RED	XM receiver, audio disc changer (R+)
E6	GRN	XM receiver, audio disc changer (L+)
E7	———	Not used
E8	YEL	Audio disc changer (ILL+)
E9	BLU	XM receiver, audio disc changer (BUS+ (GA-NET))
E10	PNK	XM receiver, audio disc changer (BUS− (GA-NET))
E11	LT BLU	XM receiver, audio disc changer (GND)
E12	———	Not used
E13	WHT	XM receiver, audio disc changer (R−)
E14	BLK	XM receiver, audio disc changer (L−)

Without navigation (USA, EX-L model)

Cavity	Wire	Connects to
E1	ORN	XM receiver (+B) (Fuse No. 23 (10 A) in the under-hood fuse/ relay box)
E2	PUR	XM receiver (SYS ACC)
E3	GRY	XM receiver (BUS SHIELD GND (GA-NET))
E4	GRY	XM receiver (SHIELD GND)
E5	RED	XM receiver (R+)
E6	GRN	XM receiver (L+)
E7	———	Not used
E8	———	Not used
E9	BLU	XM receiver (BUS+ (GA-NET))
E10	PNK	XM receiver (BUS− (GA-NET))
E11	LT BLU	XM receiver (GND) (G504)
E12	———	Not used
E13	WHT	XM receiver (R−)
E14	BLK	XM receiver (L−)

Audio Unit Connector G (3P)

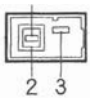

Terminal side of male terminals

All models

Cavity	Wire	Connects to
G1	———	Antenna module unit (SIG)
G2	———	Antenna module unit (SH (AM/FM))
G3	———	Antenna module unit (ANT +B)

(cont'd)

System Description (cont'd)

Stereo Amplifier Connector for Inputs and Outputs (With navigation)

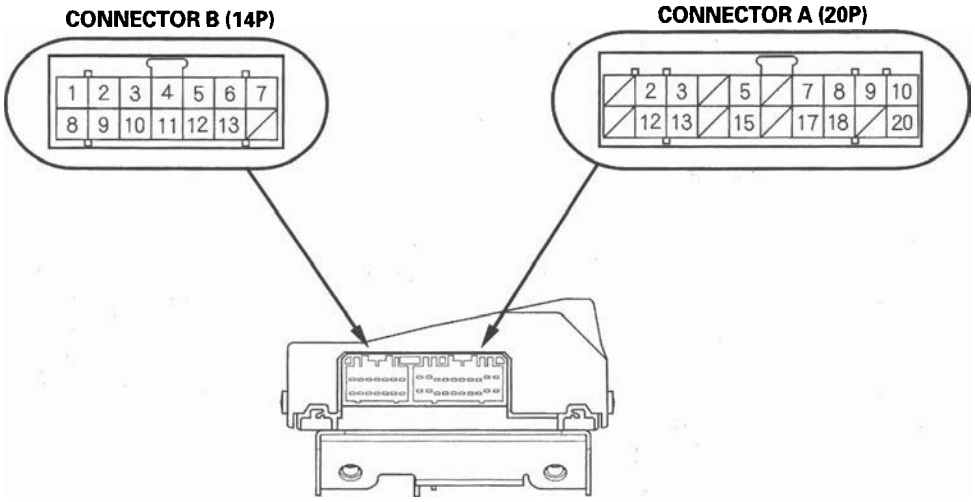

Cavity	Wire	Connects to
A1	———	Not used
A2	WHT	Front passenger's door speaker, Right tweeter (FR RL SPKR+)
A3	LT GRN	Driver's door speaker, Left tweeter (FR L SPKR+)
A4	———	Not used
A5	PNK	Subwoofer (WOOFER+)
A6	———	Not used
A7	BLU	Right rear speaker (RR R SPKR+)
A8	GRY	Left rear speaker (RR L SPKR+)
A9	WHT	Multiplex integrated control unit (MICU) (ACC RADIO)
A10	LT GRN	Main stereo power supply
A11	———	Not used
A12	YEL	Front passenger's door speaker, Right tweeter (FR RL SPKR−)
A13	GRN	Driver's door speaker, Left tweeter (FR L SPKR−)
A14	———	Not used
A15	BLU	Subwoofer (WOOFER−)
A16	———	Not used
A17	ORN	Right rear speaker (RR R SPKR−)
A18	BRN	Left rear speaker (RR L SPKR−)
A19	———	Not used
A20	BLK	Ground (G504)

Cavity	Wire	Connects to
B1	RED	Navigation unit (FL SIG+)
B2	GRY	Navigation unit (FL SIG SHIELD)
B3	LT GRN	Navigation unit (RL SIG+)
B4	BRN	Navigation unit (FR SIG+)
B5	GRY	Navigation unit (FR SIG SHIELD)
B6	BLU	Navigation unit (RR SIG+)
B7	RED	Navigation unit (AMP ON)
B8	GRN	Navigation unit (FL SIG−)
B9	GRY	Navigation unit (RL SIG SHIELD)
B10	PUR	Navigation unit (RL SIG−)
B11	YEL	Navigation unit (FR SIG−)
B12	GRY	Navigation unit (RR SIG SHIELD)
B13	PNK	Navigation unit (RR SIG−)
B14	———	Not used

XM Receiver Connector for Inputs and Outputs

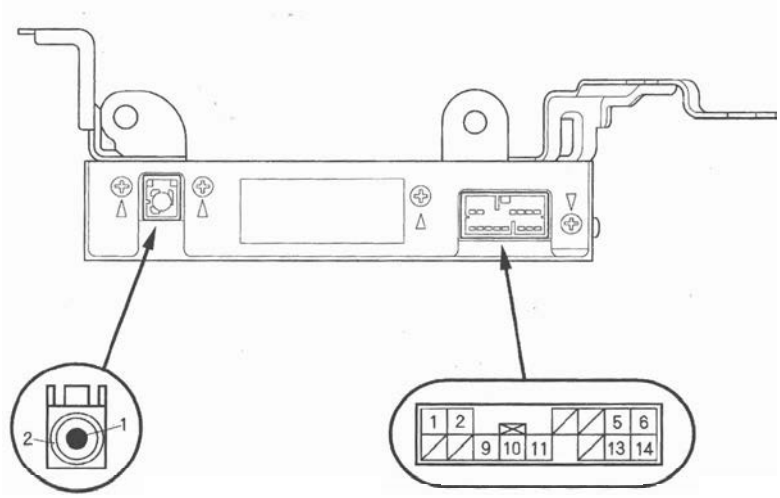

CONNECTOR B (2P)

CONNECTOR A (14P)

With navigation

Cavity	Wire	Connects to
A1	ORN	Navigation unit (+B)
A2	PUR	Navigation unit (SYS ACC)
A3	———	Not used
A4	———	Not used
A5	RED	Navigation unit (R+)
A6	GRN	Navigation unit (L+)
A7	———	Not used
A8	———	Not used
A9	BLU	Navigation unit (BUS+ (GA-NET))
A10	PNK	Navigation unit (BUS− (GA-NET))
A11	LT BLU	Navigation unit (GND)
A12	———	Not used
A13	WHT	Navigation unit (R−)
A14	BLK	Navigation unit (L−)

Without navigation

Cavity	Wire	Connects to
A1	ORN	Audio unit (+B)
A2	PUR	Audio unit (SYS ACC)
A3	———	Not used
A4	———	Not used
A5	RED	Audio Unit (R+)
A6	GRN	Audio Unit (L+)
A7	———	Not used
A8	———	Not used
A9	BLU	Audio Unit (BUS+ (GA-NET))
A10	PNK	Audio Unit (BUS− (GA-NET))
A11	LT BLU	Audio Unit (GND)
A12	———	Not used
A13	WHT	Audio Unit (R−)
A14	BLK	Audio Unit (L−)

Cavity	Wire	Connects to
B1	———	Signal antenna (SIG)
B2	———	Signal antenna (SHIELD (XM))

(cont'd)

System Description (cont'd)

Audio Disc Changer Connector for Inputs and Outputs (With navigation)

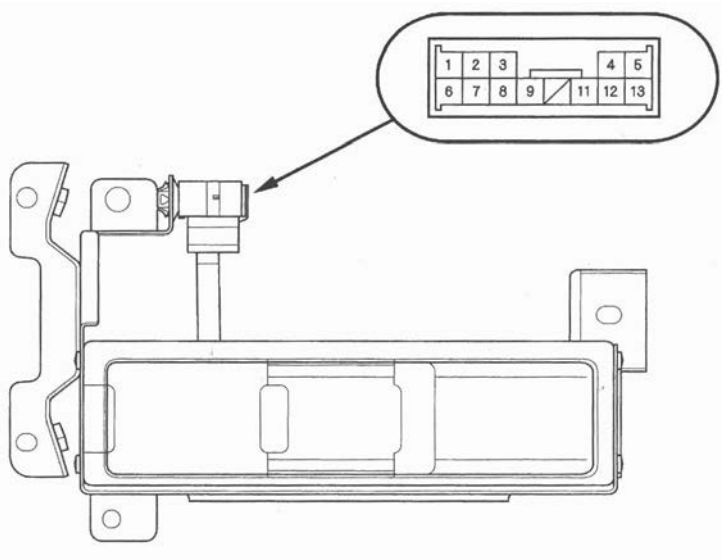

Cavity	Wire	Connects to
1	LT BLU	Navigation unit (GND)
2	YEL	Navigation unit (ILL+)
3	BLU	Navigation unit (BUS+ (GA-NET))
4	RED	Navigation unit (R+)
5	GRN	Navigation unit (L+)
6	ORN	Navigation unit (+B)
7	PUR	Navigation unit (SYS ACC)
8	PNK	Navigation unit (BUS− (GA-NET))
9	GRY	Navigation unit (BUS SHIELD GND (GA-NET))
10	———	Not used
11	GRY	Navigation unit (SHIELD GND)
12	WHT	Navigation unit (R−)
13	BLK	Navigation unit (L−)

Auxiliary Jack Assembly Connector for Inputs and Outputs

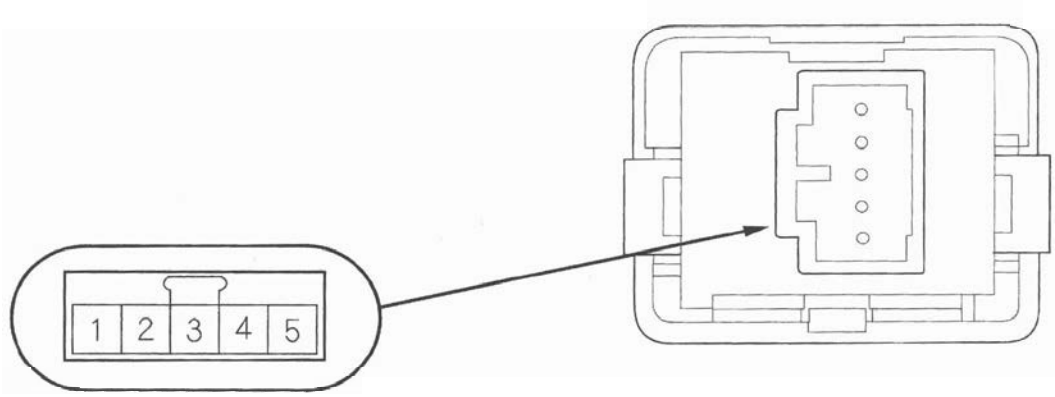

With navigation

Cavity	Wire	Connects to
1	LT BLU	Navigation unit (AUX DET)
2	LT GRN	Navigation unit (AUX GND)
3	BLK	Navigation unit (AUX SGND)
4	WHT	Navigation unit (AUX L)
5	RED	Navigation unit (AUX R)

Without navigation

Cavity	Wire	Connects to
1	LT BLU	Audio unit (AUX DET)
2	GRN*1	Audio unit (AUX GND)
	LT GRN*2	
3	RED*1	Audio unit (AUX SGND)
	BLK*2	
4	WHT	Audio unit (AUX L)
5	BLK*1	Audio unit (AUX R)
	RED*2	

* 1: LX model
* 2: Except LX model

Circuit Diagram

With Navigation

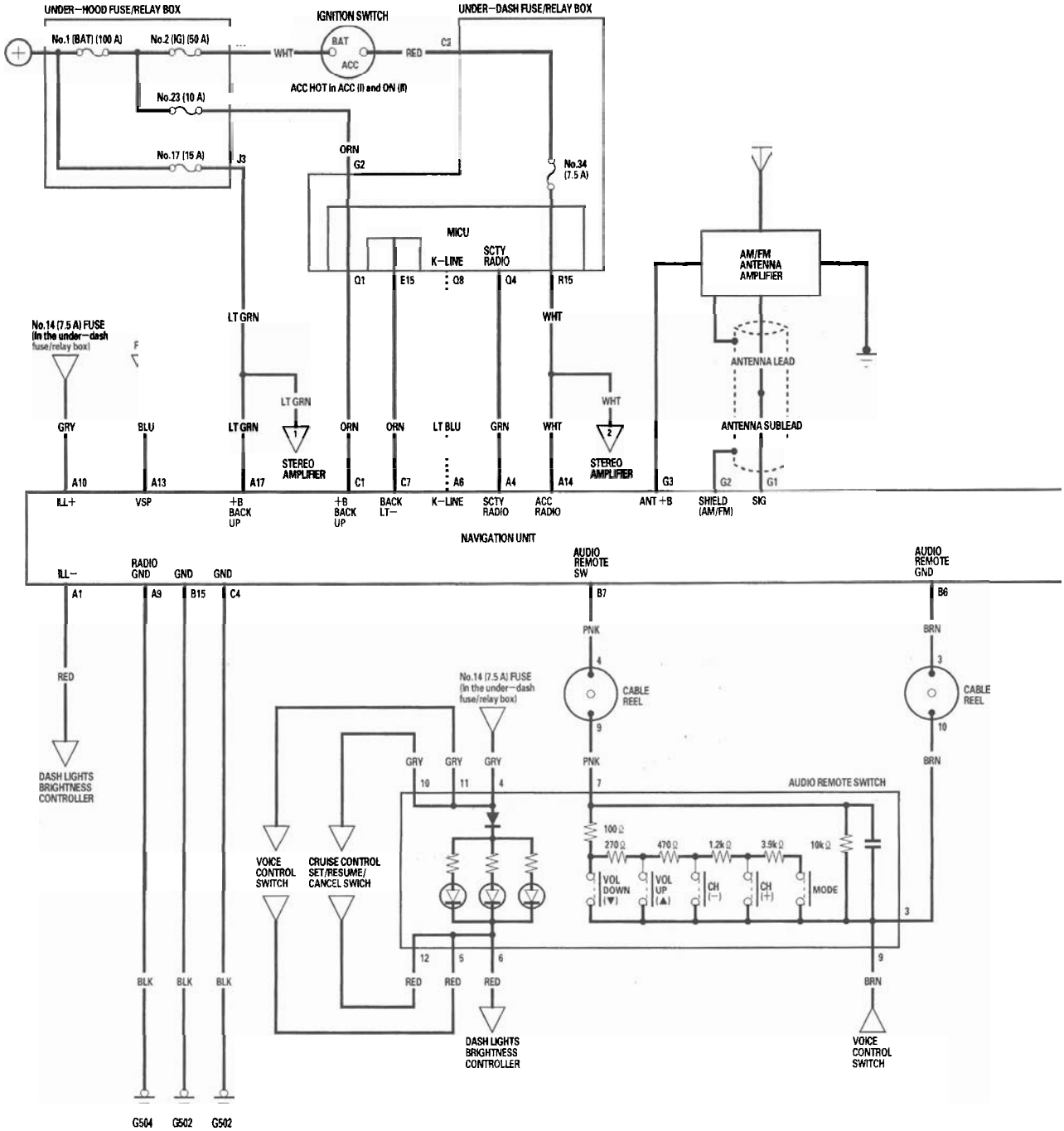

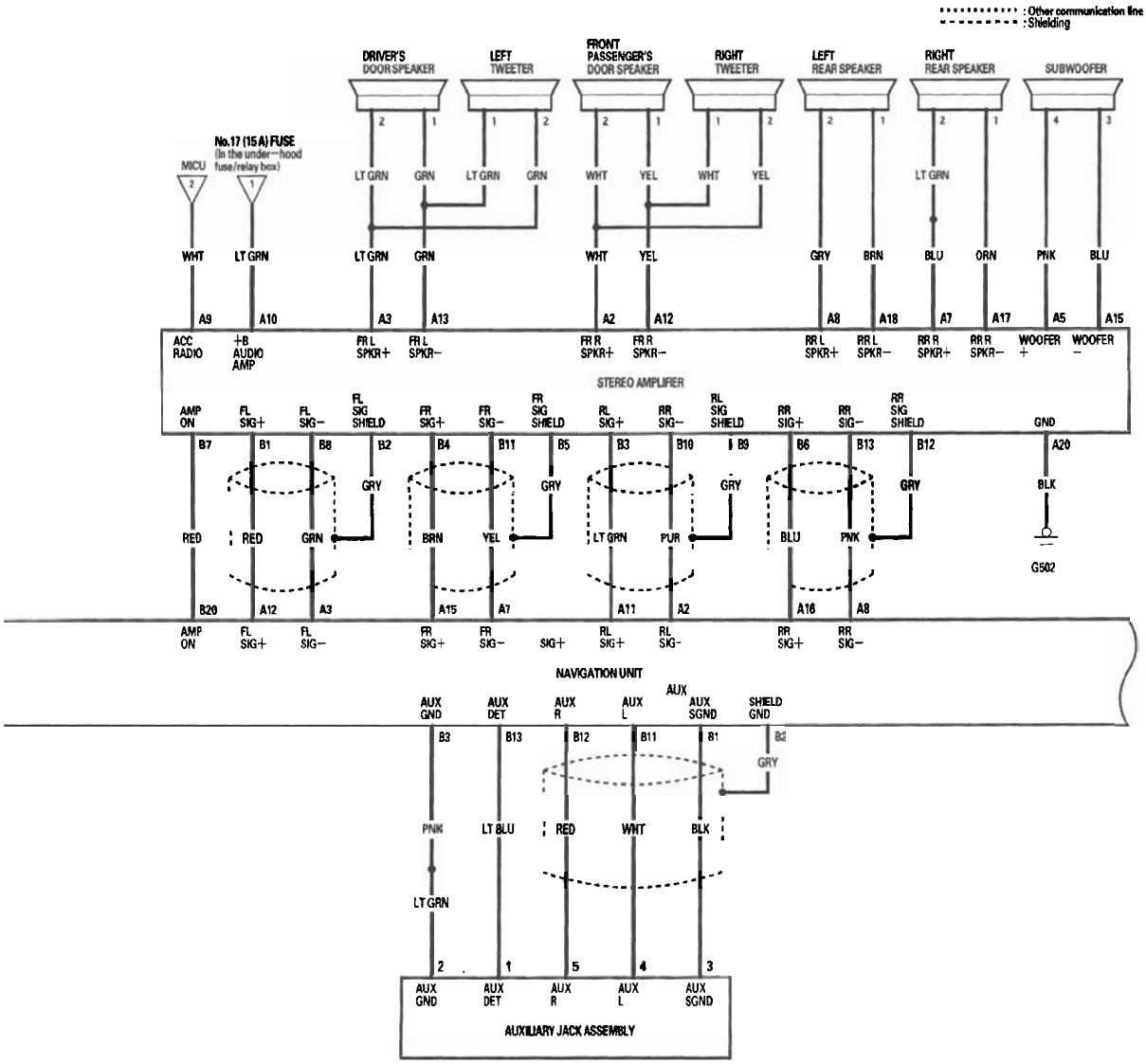
: Other communication line
: Shielding
DRIVER'S DOOR SPEAKER
LEFT TWEETER
FRONT PASSENGER'S DOOR SPEAKER
RIGHT TWEETER
LEFT REAR SPEAKER
RIGHT REAR SPEAKER
SUBWOOFER
No.17 (15A) FUSE (In the under-hood fuse/relay box)
MICU
LT GRN
GRN
WHT
YEL
GRY
BRN
BLU
ORN
PNK
A9
A10
A3
A13
A2
A12
A8
A18
A7
A17
A5
A15
ACC RADIO
+B AUDIO AMP
FR L SPKR+
FR L SPKR-
FR R SPKR+
FR R SPKR-
RR L SPKR+
RR L SPKR-
RR R SPKR+
RR R SPKR-
WOOFER +
WOOFER -
STEREO AMPLIFIER
AMP ON
FL SIG+
FL SIG-
FL SIG SHIELD
FR SIG+
FR SIG-
FR SIG SHIELD
RL SIG+
RR SIG-
RL SIG SHIELD
RR SIG+
RR SIG-
RR SIG SHIELD
GND
B7
B1
B8
B2
B4
B11
B5
B3
B10
B9
B6
B13
B12
A20
RED
GRN
GRY
BRN
YEL
LT GRN
PUR
BLU
PNK
BLK
G502
B20
A12
A3
A15
A7
A11
A2
A16
A8
NAVIGATION UNIT
AUX GND
AUX DET
AUX R
AUX L
AUX SGND
SHIELD GND
B3
B13
B12
B11
B1
B2
PNK
LT BLU
RED
WHT
BLK
2
1
5
4
3
AUXILIARY JACK ASSEMBLY

(cont'd)

Circuit Diagram (cont'd)

With Navigation

: Shielding

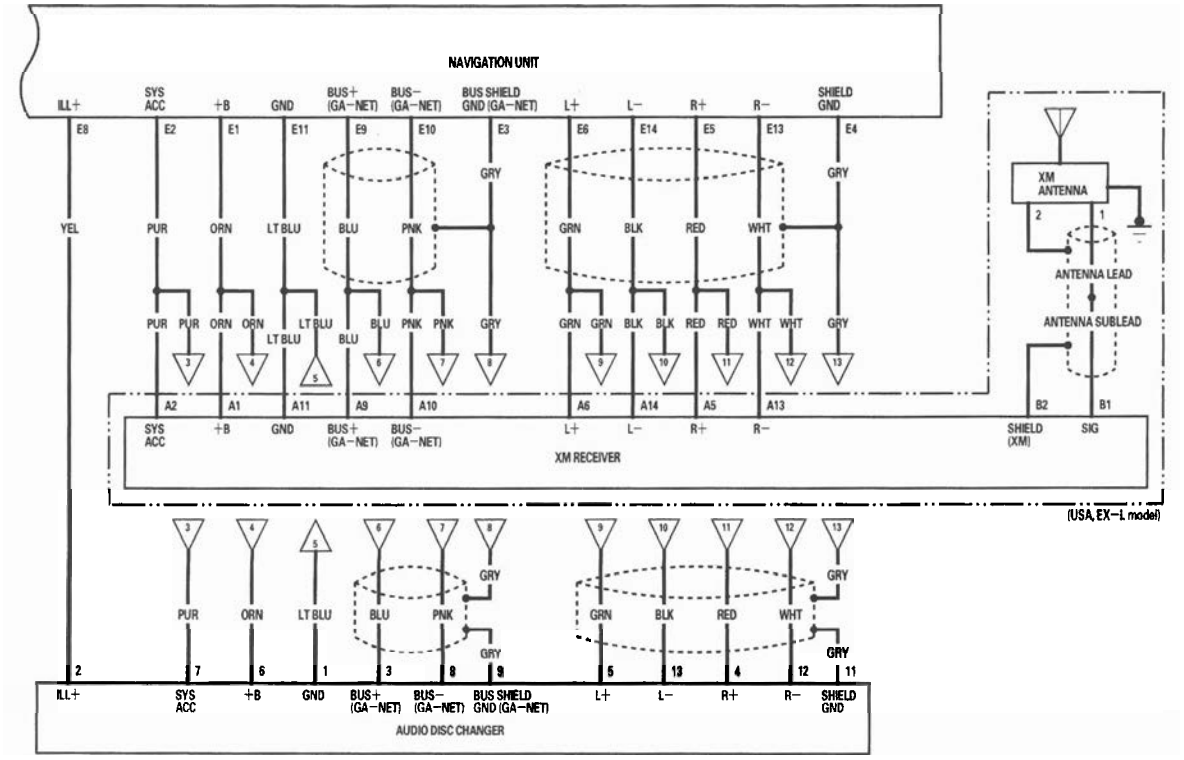

Without Navigation

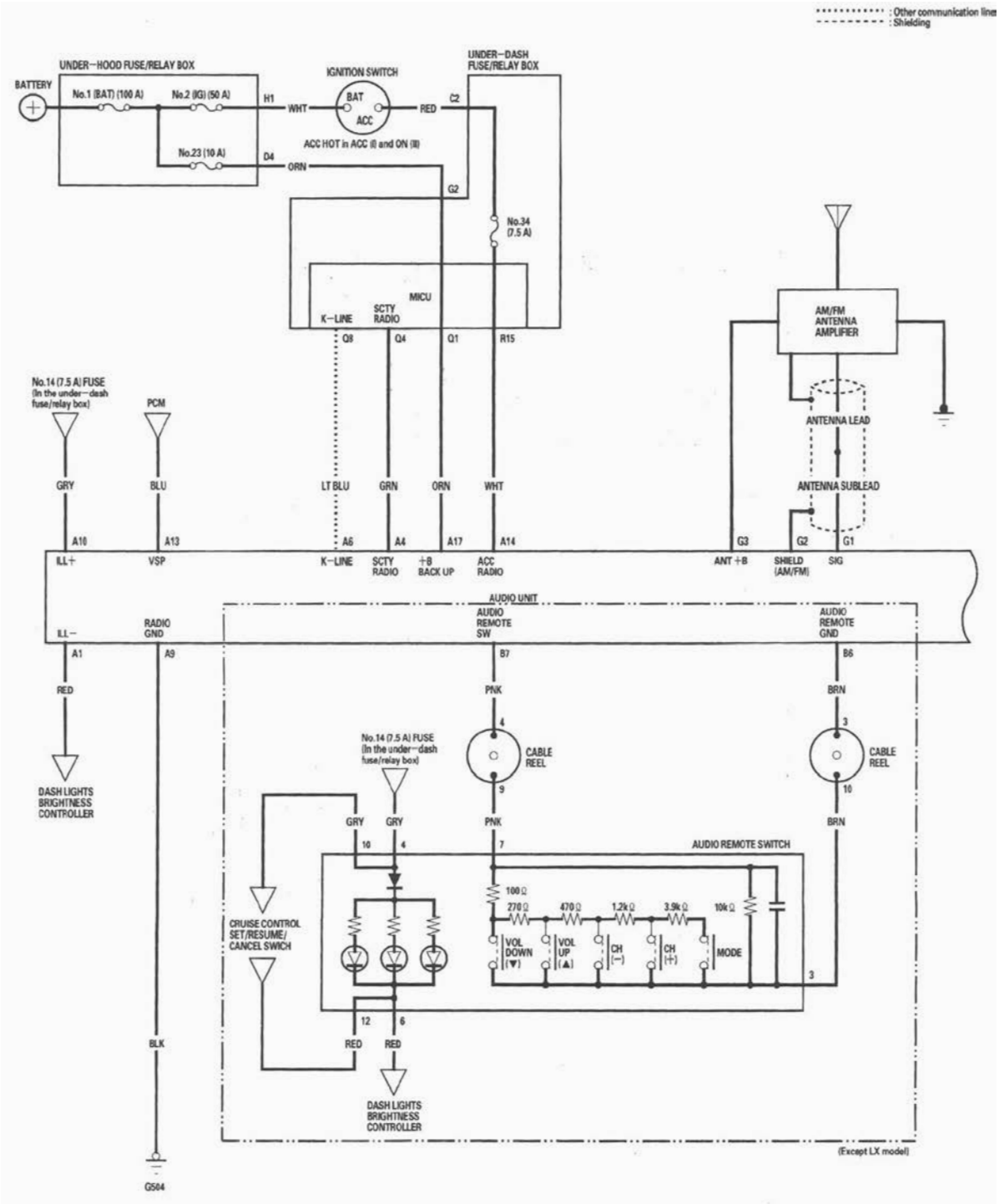

(cont'd)

Circuit Diagram (cont'd)

Without Navigation, with Audio

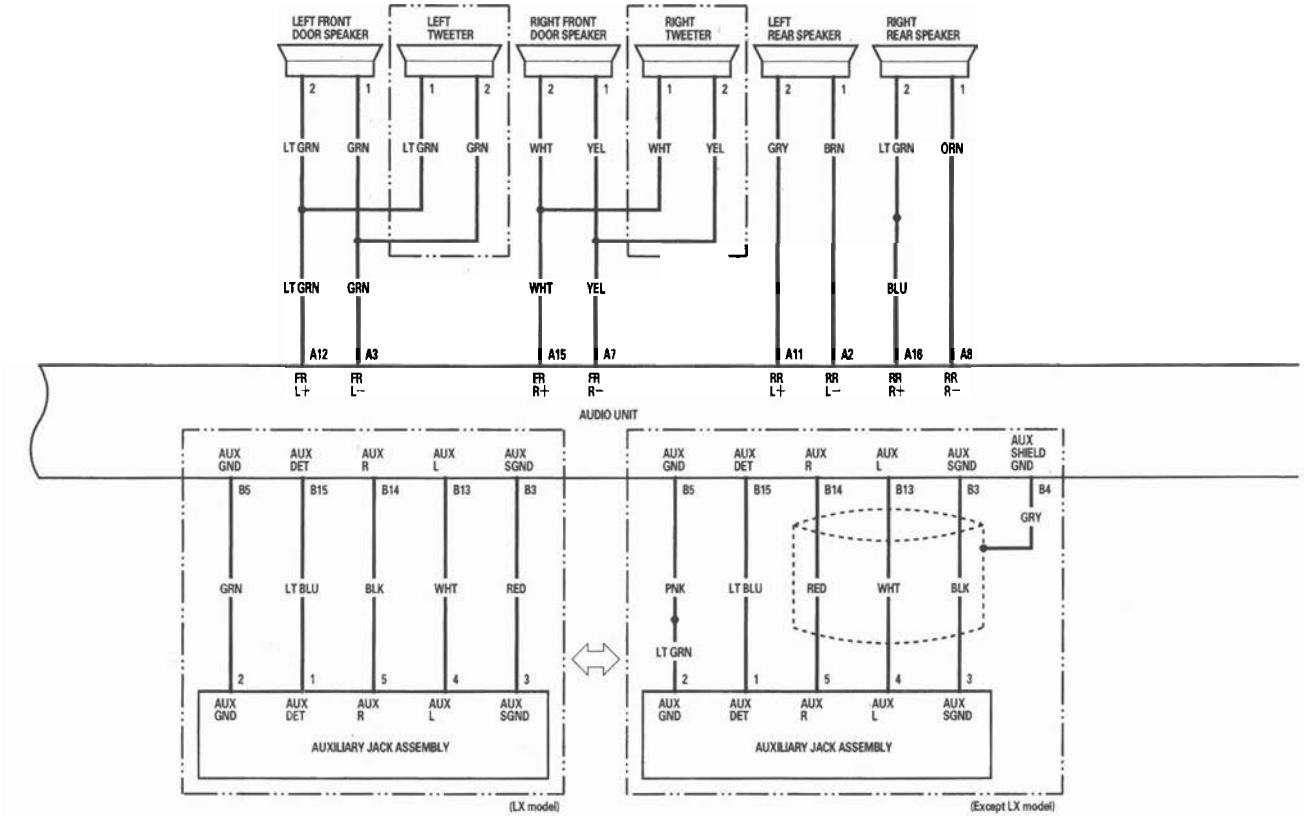

*: Except LX model
: Shielding

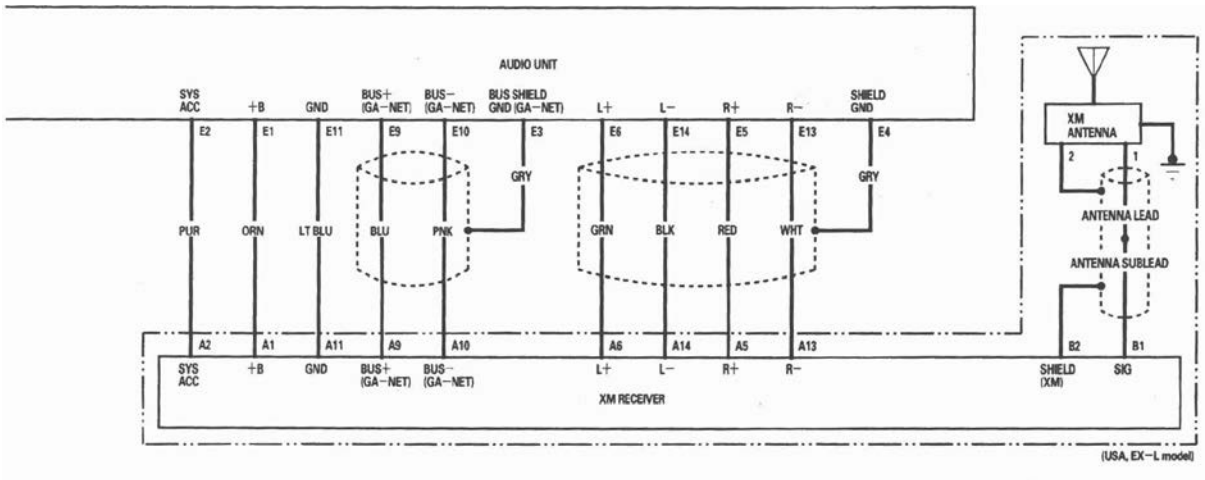

Self-diagnostic Function

Without Navigation

The audio system has a self-diagnostic function. To run the self-diagnostic function, do the following:

How to check for audio system condition

NOTE: The audio unit must be in the code enter screen before doing the self-diagnostic function.

1. Turn the ignition switch to the ACC (I) or ON (II) position.
2. Turn on the audio unit.
3. Push and hold the "No. 1" and "No. 6" buttons. While holding the buttons, push the "VOL push PWR" knob (A) to ON. Release the buttons and the self-diagnostic function begins.

Except LX model

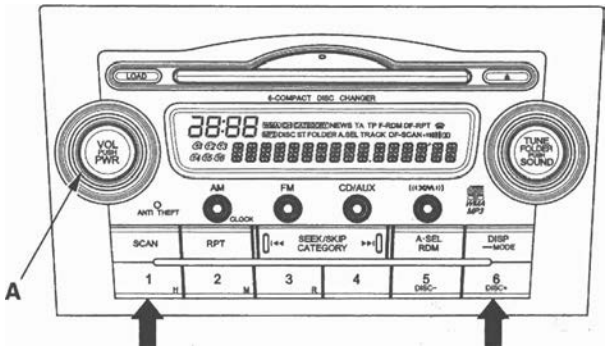

LX model

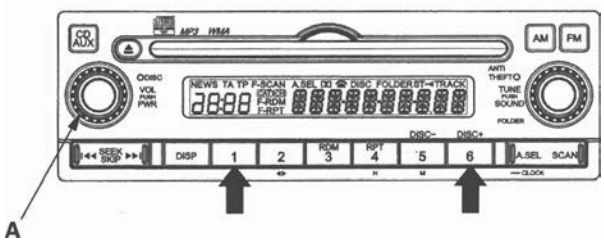

4. By pressing a preset button, the input triggers the diagnostic mode that is assigned to that preset switch.

"No. 3" button
Entire LCD lighting/light-out mode: Turns on/off the entire LCD to show the presence or absence of an LCD segment failure.

"No. 4" button
Duty (for the Illumination dim) indication mode: Indicates the duty for the Illumination dim.

"No. 5" button
Vehicle speed pulse indication mode: Indicates the vehicle speed pulse.

"FM" button (Push and hold 5 sec.)
Reception level check mode: Indicates the FM signal reception level. When entering the reception level check mode.

"CD" button (Push and hold 5 sec.)
DRAM residual quantity indication mode: Indicates the DRAM residual quantity.

5. The self-diagnostic function ends when the audio unit is turned off, or the ignition switch is turned off.

Display Specifications

Entry LCD Lighting
No. 3 button

Except LX model

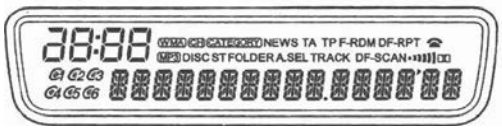

LX model



Entry LCD Lights-outs
No. 3 button

Except LX model

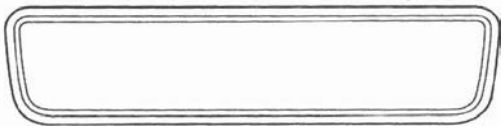

LX model



Duty (for the illumination) indication
No. 4 button

Except LX model

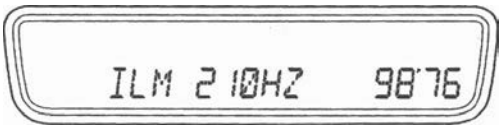

LX model



Vehicle speed pulse indication
No. 5 button

Except LX model

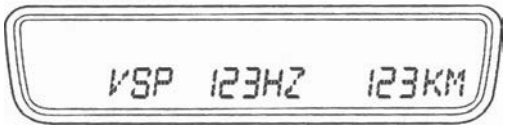

LX model



Reception level indication
FM button

Except LX model

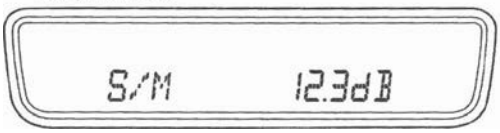

LX model

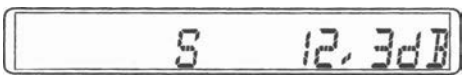

DRAM residual quantity indication
CD button

Except LX model

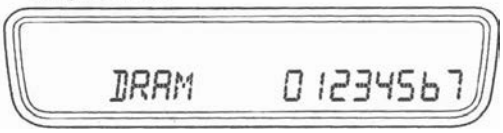

LX model



Speaker check mode

6. Turn off the audio unit.

7. Push and hold the "No. 1" and "No. 3" buttons. While holding the buttons, push the "VOL push PWR" knob to ON. Release the buttons and the speaker check mode begins. Low-Frequency hum should sound for one speaker. Change the test speaker by push the "SKIP" button. If you find a speaker(s) with no sound, check the speaker and harness connections. It the connections are good, replace the speaker and retest.

8. The self-diagnostic function ends when you turn the audio unit off, or turn the ignition switch off.

Error Codes

The audio system displays error codes when a problem is detected with the audio disc changer, the audio disc, the XM radio, or the anti-theft code.

CD Error Codes

Error Code Displayed	Possible Cause	Solution
DISC ERROR	There is a problem with the disc player. A common problem is disc labels coming off the disc while in the player.	Try to eject the disc and try another one. If there is still a problem, replace the navigation unit or audio unit.
HEAT ERROR	Disc player is hot. This can happen if the vehicle is parked out in the hot sun all day.	Park the vehicle in a cooler place for a while and try the disc player again. If the error code is still present, try another disc. If the error code is still present, replace the navigation unit or audio unit.
Focus Error	Possibly DVD inserted in unit, or CD installed up side down.	Eject CD and try a known-good CD. If the error code is still present, replace the audio or navigation unit.
File Error	Audio unit cannot read the files on the CD or CD-R.	• Verify that CD/CD-R file names end in "CDA" or "WMA." • Verify that CD-R discs with compressed music formats end in "MP3" or "WMA." • Other file formats like I-tunes or "Ogg" are not recognized. • WMA files may have (DRM) copy protection and cannot be read.
Mech Error	• CD label jammed in the mechanism. • CD eject mechanism or motor is inoperative. • CD spindle motor won't spin up the CD.	Press the EJECT button and hold it for 5 seconds. If the CD does not eject, try again. If the CD still won't eject, replace the navigation unit.

XM Error Codes

Error Code Displayed	Possible Cause	Solution
OFF AIR	XM channel not in service.	Try another XM channel.
NO SIGNAL	Loss of signal.	Both terrestrial and satellite antennas have lost signal. Park the vehicle outside with a clear view of the southern horizon.
UPDATING	XM radio is receiving information update from the network.	This message will disappear once the update finishes.
CHECK ANTENNA ANTENNA ERROR	XM antenna error.	Repair open or short in the XM antenna or lead. Substitute the XM antenna with a known-good one, and recheck. If the error is gone, replace the original XM antenna. If the error is still present, substitute a known-good XM receiver. If the error code goes away, replace the XM receiver. If the error code is still present, replace the antenna lead.
LOADING	XM radio is acquiring audio or program information.	Wait until the radio receives the information.
— — —	No signal from XM.	Check known-good vehicle with XM radio. If the known-good vehicle has the same symptoms, contact XM satellite radio at (800) 852—9696.

Audio Unit Error Codes

Error Code Displayed	Possible Cause	Solution
CODE ERROR 1	Anti-theft code mismatch (1st try).	Enter the correct anti-theft code.
CODE ERROR E	Anti-theft code mismatch (10th try).	Remove fuse No. 17 (15 A) in the under-hood fuse/relay box, then reinsert it. You will have 10 more tries to enter the correct anti-theft code.

PC Card Error Codes

Error Code Displayed	Possible Cause	Solution
CARD FILE ERROR	Audio unit cannot read the files on the PC card.	• Verify that PC card file names end in "CDA" or "WMA." • Verify that PC card with compressed music formats end in "MP3" or "WMA." • Other file formats like I-tunes or "Ogg" are not recognized. • WMA files may have (DRM) copy protection and cannot be read.
CARD MEDIA ERROR	Audio unit cannot recognize PC card.	• Please confirm a kind of PC card. • When use an adapter, please confirm a connection state of an adapter.
CARD NO MUSIC	Audio unit can recognize PC card, but a music file is not found.	Please put a music file.

Symptom Troubleshooting

Poor AM or FM radio reception or interference (with navigation)

NOTE:
- Check the radio reception in an open area.
- Compare it to a known-good vehicle of the same model, year, and trim level whenever possible.
- If necessary, have the customer demonstrate the symptom.
- Poor reception/interference can be caused by the following:
- The radio station is far away.
- Atmospheric conditions are unfavorable.
- Tall buildings, mountains, or high-voltage power lines are nearby.
- Aftermarket window tinting or electronic accessories.
- Non-standard antenna mast.

1. Do the seek stop test (see page 23-74).

   Does the test vehicle receive 90 % of the same status as the known-good vehicle?

   YES—Multipath interference or weak station. Operation is normal at this time.■

   NO—Go to step 2.

2. Check if the radio reception/interference is the same as the known-good vehicle in several locations.

   Is the reception/interference the same?

   YES—Go to step 3.

   NO—Multipath interference or weak station. Operation is normal.■

3. Check the reception/interference while the engine is running, and compare it to the known-good vehicle.

   Is there noise (static or whine) only with the engine running?

   YES—Check the antenna and radio grounds. If OK, check the charging system, fuel injection system (fuel pump), HVAC (blower motor), and the ignition system.■

   NO—Go to step 4.

4. Check the antenna mast for cracks, or other damage. Make sure that the AM/FM/XM antenna is not loose.

   NOTE: Do not use any tools to tighten the antenna mast.

   Is there any damage?

   YES—Replace the AM/FM/XM antenna (see page 23-83).■

   NO—Go to step 5.

5. Disconnect the antenna cable 3P connector from the AM/FM/XM antenna (see page 23-83).

6. Measure the voltage between the antenna amplifier connector No. 3 terminal at the antenna amplifier lead and body ground.

ANTENNA AMPLIFIER 3P CONNECTOR

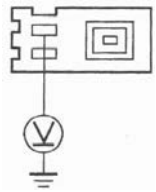

Terminal side of female terminals

Is there battery voltage?

YES—Go to step 11.

NO—Go to step 7.

7. Remove the navigation unit (see page 23-140).

8. Disconnect navigation unit connector G (3P).

9. Check for continuity between navigation unit connector G (3P) No. 3 terminal and the antenna amplifier 3P connector No. 3 terminal.

NAVIGATION UNIT CONNECTOR G (3P)
Terminal side of female terminals

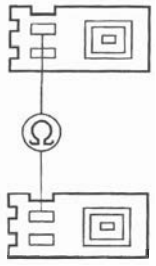

ANTENNA AMPLIFIER 3P CONNECTOR
Terminal side of female terminals

Is there continuity?

YES—Go to step 10.

NO—Repair open in the wire between the navigation unit and the antenna amplifier.■

10. Check for continuity between the antenna amplifier connector (3P) No. 3 terminal and body ground.

ANTENNA AMPLIFIER 3P CONNECTOR

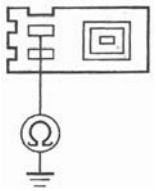

Terminal side of female terminals

Is there continuity?

YES—Repair short in the wire between the navigation unit and the antenna amplifier.■

NO—Substitute a known-good navigation unit, and recheck.■

11. Remove the navigation unit (see page 23-140).

12. Check for continuity between navigation unit connector G (3P) No. 1 terminal and the antenna amplifier 3P connector No. 1 terminal.

NAVIGATION UNIT CONNECTOR G (3P)
Terminal side of female terminals

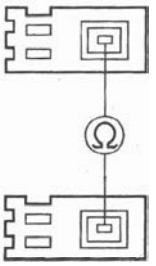

ANTENNA AMPLIFIER 3P CONNECTOR
Terminal side of female terminals

Is there continuity?

YES—Go to step 13.

NO—Replace the antenna lead and/or sublead.■

(cont'd)

Symptom Troubleshooting (cont'd)

13. Check for continuity between navigation unit connector G (3P) No. 1 terminal and body ground.

NAVIGATION UNIT CONNECTOR G (3P)

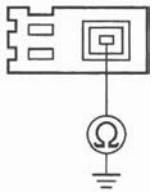

Terminal side of female terminals

Is there continuity?

YES—Replace the antenna lead and/or sublead. ■

NO—Go to step 14.

14. Check for continuity between navigation unit connector G (3P) No. 2 terminal and the antenna amplifier 3P connector No. 2 terminal.

NAVIGATION UNIT CONNECTOR G (3P)
Terminal side of female terminals

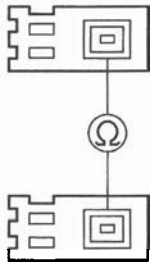

ANTENNA AMPLIFIER 3P CONNECTOR
Terminal side of female terminals

Is there continuity?

YES—Go to step 15.

NO—Replace the antenna lead and/or sublead. ■

15. Check for continuity between navigation unit connector G (3P) No. 1 and No. 2 terminals.

NAVIGATION UNIT CONNECTOR G (3P)

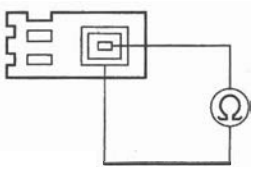

Terminal side of female terminals

Is there continuity?

YES—Replace the antenna lead and/or sublead. ■

NO—Replace the antenna amplifier, and recheck. If the reception is still poor, replace the navigation unit (see page 23-140). ■

Poor AM or FM radio reception or interference (without navigation)

NOTE:
- Check the radio reception in an open area.
- Compare it to a known-good vehicle of the same model, year, and trim level whenever possible.
- If necessary, have the customer demonstrate the symptom.
- Poor reception/interference can be caused by the following:
- The radio station is far away.
- Atmospheric conditions are unfavorable.
- Tall buildings, mountains, or high-voltage power lines are nearby.
- Aftermarket window tinting or electronic accessories.
- Non-standard antenna mast.

1. Do the seek stop test (see page 23-74).

   Does the test vehicle receive 90 % of the same stations as the known-good vehicle?

   YES—Multipath interference or weak station. Operation is normal at this time.■

   NO—Go to step 2.

2. Check if the radio reception/interference is the same as the known-good vehicle in several locations.

   Is the reception/interference the same?

   YES—Go to step 3.

   NO—Multipath interference or weak station. Operation is normal.■

3. Check the reception/interference while the engine is running and compare it to the known-good vehicle.

   Is there noise (static or whine) only with the engine running?

   YES—Check the antenna and radio grounds. If OK, check the charging system, fuel injection system (fuel pump), HVAC (blower motor), and the ignition system.■

   NO—Go to step 4.

4. Check the antenna mast for cracks, or other damage. Make sure that the AM/FM/XM antenna is not loose.

   NOTE: Do not use any tools to tighten the antenna mast.

   Is there any damage?

   YES—Replace the AM/FM/XM antenna (see page 23-83).■

   NO—Go to step 5.

(cont'd)

Symptom Troubleshooting (cont'd)

5. Disconnect the antenna cable 3P connector from the AM/FM/XM antenna (see page 23-83).

6. Measure the voltage between the antenna cable connector No. 3 terminal at the antenna amplifier lead and body ground.

ANTENNA AMPLIFIER 3P CONNECTOR

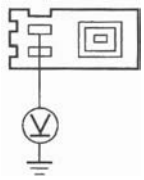

Terminal side of female terminals

Is there battery voltage?

YES—Go to step 11.

NO—Go to step 7.

7. Remove the audio unit (see page 23-76).

8. Disconnect audio unit connector G (3P).

9. Check for continuity between audio unit connector G (3P) No. 3 terminal and the antenna amplifier 3P connector No. 3 terminal.

AUDIO UNIT CONNECTOR G (3P)
Terminal side of female terminals

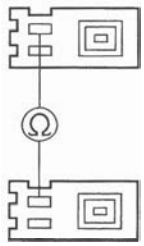

ANTENNA AMPLIFIER 3P CONNECTOR
Terminal side of female terminals

Is there continuity?

YES—Go to step 10.

NO—Repair open in the wire between the audio unit and the antenna amplifier. ■

10. Check for continuity between the antenna amplifier connector (3P) No. 3 terminal and body ground.

ANTENNA AMPLIFIER 3P CONNECTOR

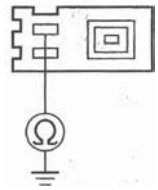

Terminal side of female terminals

Is there continuity?

YES—Repair short in the wire between the audio unit and the antenna amplifier. ■

NO—Substitute a known-good audio unit, and recheck. ■

11. Remove the audio unit (see page 23-76).

12. Check for continuity between audio unit connector G (3P) No. 1 terminal and the antenna amplifier 3P connector No. 1 terminal.

AUDIO UNIT CONNECTOR G (3P)
Terminal side of female terminals

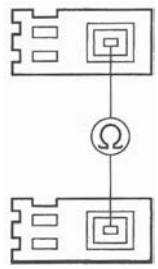

ANTENNA AMPLIFIER 3P CONNECTOR
Terminal side of female terminals

Is there continuity?

YES—Go to step 13.

NO—Replace the antenna lead and/or sublead. ■

13. Check for continuity between audio unit connector G (3P) No. 1 terminal and body ground.

AUDIO UNIT CONNECTOR G (3P)

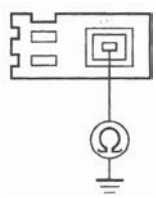

Terminal side of female terminals

Is there continuity?

YES—Replace the antenna lead and/or sublead. ■

NO—Go to step 14.

14. Check for continuity between audio unit connector G (3P) No. 2 terminal and the antenna amplifier 3P connector No. 2 terminal.

AUDIO UNIT CONNECTOR G (3P)
Terminal side of female terminals

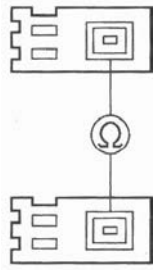

ANTENNA AMPLIFIER 3P CONNECTOR
Terminal side of female terminals

Is there continuity?

YES—Replace the antenna lead and/or sublead. ■

NO—Go to step 15.

15. Check for continuity between audio unit connector G (3P) No. 1 and No. 2 terminals.

AUDIO UNIT CONNECTOR G (3P)

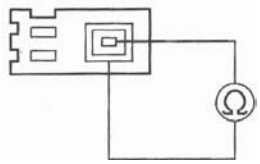

Terminal side of female terminals

Is there continuity?

YES—Replace the antenna lead and/or sublead. ■

NO—Replace the antenna amplifier, and recheck. If the reception is still poor, replace the audio unit (see page 23-76). ■

Symptom Troubleshooting (cont'd)

Power switch will not turn ON (No information display and no sound) (with navigation)

1. With the ignition switch ON (II), push the power switch ON to see if navigation unit turns ON.

   Does the navigation unit display operate properly, and does the audio sound normal?

   YES—Intermittent failure, the system is OK at this time.■

   NO—Go to step 2.

2. Turn the ignition switch OFF.

3. Check the No. 17 (15 A) fuse and the No. 23 (10 A) fuse in the under-hood fuse/relay box and No. 34 (7.5 A) fuse in the under-dash fuse/relay box.

   Are the fuses OK?

   YES—Go to step 4.

   NO—Replace the fuse(s), and recheck.■

4. Remove the navigation unit (see page 23-140). Check that the navigation unit is properly connected.

   Is it connected properly?

   YES—Go to step 5.

   NO—Reconnect the connectors, and recheck the function.■

5. Turn the ignition switch ON (II).

6. Measure the voltage between navigation unit connector A (17P) terminal No. 14 and body ground, and between terminal No. 17 and body ground, and navigation unit connector C (12P) No. 1 terminal and body ground.

NAVIGATION UNIT CONNECTOR A (17P)

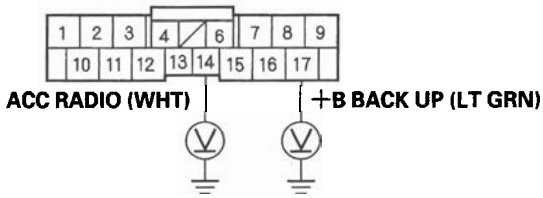

Wire side of female terminals

NAVIGATION UNIT CONNECTOR C (12P)

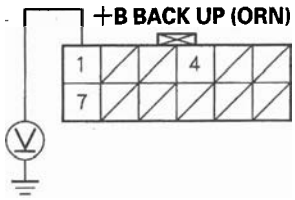

Wire side of female terminals

Is there battery voltage on both terminals?

YES—Go to step 7.

NO—Repair open in the wire(s) between the No. 17 (15 A) fuse in the under-hood fuse/relay box and No. 34 (7.5 A) in the under-dash fuse/relay box and the audio unit.■

7. Measure the voltage between navigation unit connector A (17P) No. 9 terminal and body ground, navigation unit connector C (12P) No. 4 terminal and body ground, and navigation unit connector B (22P) terminal No. 15 and body ground.

NAVIGATION UNIT CONNECTOR A (17P)

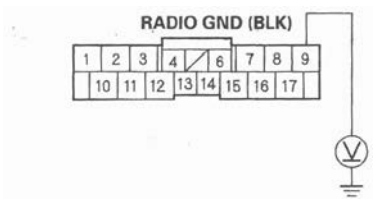

Wire side of female terminals

NAVIGATION UNIT CONNECTOR B (22P)

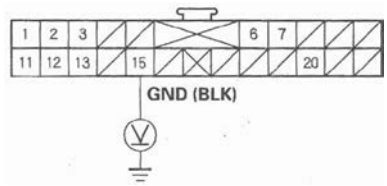

Wire side of female terminals

NAVIGATION UNIT CONNECTOR C (12P)

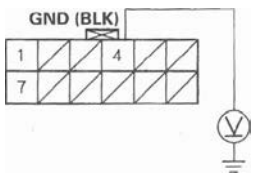

Wire side of female terminals

Is there less than 0.1 V on both terminals?

YES—Replace the navigation unit (see page 23-140). ■

NO—Repair open or high resistance in the wire between navigation unit connector A (17P) No. 9 terminal or navigation unit connector B (22P) No. 15 terminal and body ground (G502) (see page 22-28), or navigation connector C (12P) and body ground (G504) (see page 22-28). ■

Power switch will not turn ON (No information display and no sound) (without navigation)

1. With the ignition switch ON (II), push the power switch ON to see if audio unit turns ON.

   Does the audio unit operate properly, and does the audio sound normal?

   YES—Intermittent failure, the system is OK at this time. ■

   NO—Go to step 2.

2. Turn the ignition switch OFF.

3. Check the No. 23 (10 A) fuse in the under-hood fuse/relay box and No. 34 (7.5 A) fuse in the under-dash fuse/relay box.

   Are the fuses OK?

   YES—Go to step 4.

   NO—Replace the fuse(s), and recheck. ■

4. Remove the audio unit (see page 23-76). Check that the audio unit is properly connected.

   Is it connected properly?

   YES—Go to step 5.

   NO—Reconnect the connector, and recheck the function. ■

5. Turn the ignition switch ON (II).

(cont'd)

Symptom Troubleshooting (cont'd)

6. Measure the voltage between audio unit connector A (17P) terminal No. 14 and body ground, and between terminal No. 17 and body ground.

AUDIO UNIT CONNECTOR A (17P)

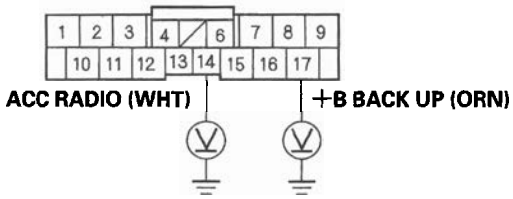

Wire side of female terminals

Is there battery voltage on the both terminals?

YES—Go to step 7.

NO—Repair open in the wire(s) between the No. 23 (10 A) fuse in the under-hood fuse/relay box and No. 34 (7.5 A) in the under-dash fuse/relay box and the audio unit. ■

7. Measure the voltage between audio unit connector A (17P) No. 9 terminal and body ground.

AUDIO UNIT CONNECTOR A (17P)

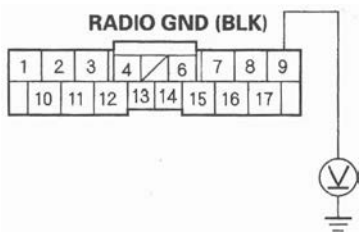

Wire side of female terminals

Is there less than 0.1 V?

YES—Replace the audio unit (see page 23-76). ■

NO—Repair open or high resistance in the wire between audio unit connector A (17P) No. 9 terminal and body ground (G504) (see page 22-30). ■

Power will not turn OFF (with navigation)

1. With the ignition switch ON (II), push the power switch OFF or turn the ignition switch OFF to see if the navigation unit turns OFF.

Is the navigation unit OFF?

YES—Operation is normal at this time. ■

NO—Go to step 2.

2. Turn the ignition switch OFF.
3. Remove the navigation unit (see page 23-140). Disconnect navigation unit connector A (17P).
4. Measure the voltage between navigation unit connector A (17P) terminal No. 14 and body ground.

NAVIGATION UNIT CONNECTOR A (17P)

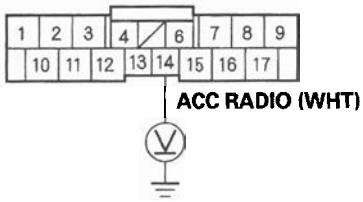

Wire side of female terminals

Is there voltage?

YES—Check for short to power on WHT wire. ■

NO—Replace the navigation unit (see page 23-140). ■

Power will not turn OFF (without navigation)

1. With the ignition switch ON (II), push the power switch OFF or turn the ignition switch OFF to see if the audio unit turns OFF.

   Is the audio unit OFF?

   YES—Operation is normal at this time.■

   NO—Go to step 2.

2. Turn the ignition switch OFF.

3. Remove the audio unit (see page 23-76). Disconnect audio unit connector A (17P).

4. Measure the voltage between audio unit connector A (17P) terminal No. 14 and body ground.

AUDIO UNIT CONNECTOR A (17P)

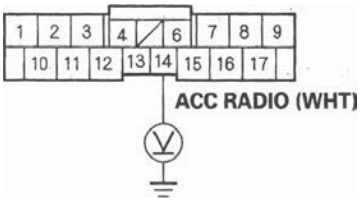

Wire side of female terminals

Is there voltage?

YES—Check for short to power on WHT wire.■

NO—Replace the audio unit (see page 23-76).■

No sound is heard from speaker(s) (display is normal) (with navigation)

NOTE:
- Set the fader and balance positions to the center.
- Before doing symptom troubleshooting, do the power switch will not turn ON troubleshooting (see page 23-38).

1. Check that the volume button is not set to the MIN level.

   Is it at MIN level?

   YES—Raise the volume level, and recheck the function.■

   NO—Go to step 2.

2. Check the NAVIGATION VOLUME MUTE COMMAND.

   Is the navigation system muting the audio?

   YES—Cancel the NAVIGATION MUTE MODE by pressing the voice command BACK button, and recheck the function.■

   NO—Go to step 3.

3. Check to see if there is a specific speaker(s) that has no sound.

   Is there a specific speaker(s) with no sound?

   YES—Go to step 4.

   NO—Go to step 7.

4. Turn the ignition switch OFF.

5. Check the speaker(s) with no sound for any damage.

   Is there any damage?

   YES—Substitute a known-good speaker and recheck.■

   NO—Go to step 6.

(cont'd)

Symptom Troubleshooting (cont'd)

6. Remove the speaker(s) with no sound (see page 23-79), and disconnect its connector.

7. Measure the resistance between the No. 1 and No. 2 terminals of the speaker connector.

   Is there about 4 Ω ?

   YES—Go to step 8.

   NO—Faulty speaker(s).■

8. Check the speaker 2P connector for a loose or poor connection.

   Reconnect the speaker 2P connector and recheck the symptom; is there still no sound?

   YES—Go to step 9.

   NO—Operation is normal at this time.■

9. Disconnect stereo amplifier connector A (20P) and connector B (14P).

10. Measure the voltage between stereo amplifier connector A (20P) No. 10 terminal and body ground.

STEREO AMPLIFIER CONNECTOR A (20P)

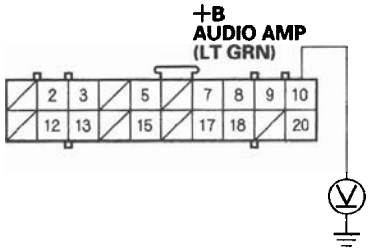

Wire side of female terminals

Is there battery voltage?

YES—Go to step 11.

NO—Repair open in the wire between fuse No. 17 (15 A) under-hood fuse box and stereo amplifier connector A (20P) No. 10 terminal.■

11. Turn the ignition switch ON (II), and push the PWR button on the navigation unit.

12. Measure the voltage between stereo amplifier connector A (20P) No. 9 terminal and body ground.

STEREO AMPLIFIER CONNECTOR A (20P)

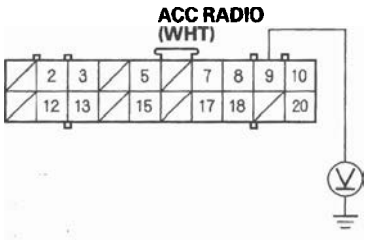

Wire side of female terminals

Is there battery voltage?

YES—Go to step 13.

NO—Repair open in the wire between fuse No. 34 (7.5 A) under-dash fuse/relay box and stereo amplifier connector A (20P) No. 9 terminal.■

13. Measure the voltage between stereo amplifier connector B (14P) No. 7 terminal and body ground.

STEREO AMPLIFIER CONNECTOR B (14P)

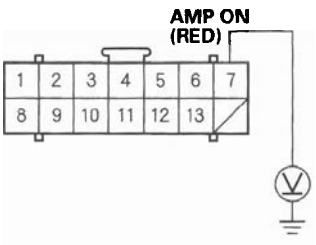

Wire side of female terminals

Is there battery voltage?

YES—Go to step 14.

NO—Check for and repair open or short in the wire between the stereo amplifier connector B (14P) No. 7 terminal and navigation unit connector B (22P) No. 20 terminal. If there is no open or short, substitute a known-good navigation unit, and recheck. If there is now battery voltage, replace the original navigation unit.■

14. Turn the ignition switch OFF.

15. Reconnect stereo amplifier connector A (20P).

16. Turn the ignition switch ON (II).

17. Measure the voltage between stereo amplifier connector A (20P) No. 20 terminal and body ground.

STEREO AMPLIFIER CONNECTOR A (20P)

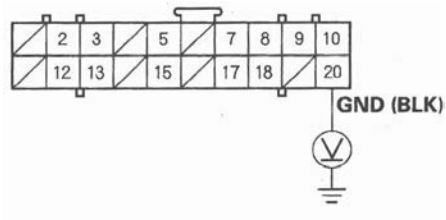

Wire side of female terminals

Is there less than 0.1 V?

YES—Go to step 18.

NO—Repair open or high resistance in the wire between stereo amplifier connector A (20P) No. 20 terminal and body ground (G505).■

(cont'd)

Symptom Troubleshooting (cont'd)

18. Turn the ignition switch OFF.

19. Disconnect stereo amplifier connector A (20P).

20. Measure the resistance between the following terminals of stereo amplifier connector A (20P) according to the table.

Speaker	Terminal	Wire color
Driver's door speaker, Left tweeter	A3 (+)	LT GRN
	A13 (−)	GRN
Front passenger's door speaker, Right tweeter	A2 (+)	WHT
	A12 (−)	YEL
Left rear speaker	A8 (+)	GRY
	A18 (−)	BRN
Right rear speaker	A7 (+)	BLU
	A17 (−)	ORN
Subwoofer	A5 (+)	PNK
	A15 (−)	BLU

Is there about 4 Ω ?

YES—Go to step 21.

NO—If there is 1 MΩ or more, repair open in the wire pairs between the stereo amplifier and speaker.■

21. Disconnect the 2P connector(s) to the speaker(s).

22. Check for continuity between stereo amplifier connector A (20P) and body ground according to the table.

Amplifier connector	Wire color
A3	LT GRN
A13	GRN
A2	WHT
A12	YEL
A8	GRY
A18	BRN
A7	BLU
A17	ORN
A5	PNK
A15	BLU

Is there continuity?

YES—Repair short to body ground in the wire between the navigation unit and the speaker.■

NO—Go to step 23.

23. Disconnect navigation unit connector A (17P) and stereo amplifier connector B (14P).

24. Check for continuity between stereo amplifier connector B (14P) and body ground according to the table. Then check for continuity between the same terminals listed in the table and stereo amplifier connector B (14P) No. 2, No. 5, No. 9, No. 12 terminals (the harness shield).

Amplifier connector	Wire color
B1	RED
B3	LT GRN
B4	BRN
B6	BLU
B8	GRN
B10	PUR
B11	YEL
B13	PNK

Is there continuity?

YES—Replace the appropriate shielded harness.■

NO—Go to step 25.

25. Check for continuity between navigation unit connector A and stereo amplifier connector B according to the table.

Navigation unit connector	Amplifier connector	Wire color
A2	B10	PUR
A3	B8	GRN
A7	B11	YEL
A8	B13	PNK
A11	B3	LT GRN
A12	B1	RED
A15	B4	BRN
A16	B6	BLU

Is there continuity?

YES—Substitute a known-good navigation unit and recheck. If the symptom/indication goes away, replace the original navigation unit. If symptom is still present, substitute a known-good stereo amplifier and recheck. If the symptom/indication goes away, replace the original stereo amplifier (see page 23-78).■

NO—Repair the appropriate shielded harness.■

No sound is heard from speaker(s) (display is normal) (without navigation)

NOTE:
- Set the fader and balance positions to the center.
- Before doing symptom troubleshooting, do the power switch will not turn ON troubleshooting (see page 23-39).
- Do the self-diagnostic function, speaker check (see page 23-29) to help isolate the speaker.

1. Check that the volume button is not set to the min level.

   Is it at MIN level?

   YES—Raise the volume level, and recheck the function.■

   NO—Go to step 2.

2. Check to see if there is a specific speaker(s) that has no sound.

   Is there a specific one?

   YES—Go to step 3.

   NO—Go to step 6.

3. Turn the ignition switch OFF.

4. Check the speaker(s) with no sound for any damage.

   Is there any damage?

   YES—Substitute known-good speaker(s) and recheck.■

   NO—Go to step 5.

5. Remove the speaker(s) with no sound (see page 23-79), and disconnect its connector.

6. Measure the resistance between the No. 1 and No. 2 terminals of the speaker connector.

   Is there about 4 Ω ?

   YES—Go to step 7.

   NO—Faulty speaker(s).■

(cont'd)

Symptom Troubleshooting (cont'd)

7. Check the speaker 2P connector for a loose or poor connection.

   Reconnect the speaker 2P connector and recheck the symptom; is there still no sound?

   YES—Go to step 8.

   NO—Operation is normal at this time.■

8. Remove the audio unit (see page 23-76). Disconnect audio unit connector A (17P).

9. Measure the resistance between the following terminals of audio unit connector A (17P) according to the table.

Speaker	Terminal	Wire color
Driver's door speaker, Left tweeter	A12 (+)	LT GRN
	A3 (−)	GRN
Front passenger's door speaker, Right tweeter	A15 (+)	WHT
	A7 (−)	YEL
Left rear speaker	A11 (+)	GRY
	A2 (−)	BRN
Right rear speaker	A16 (+)	BLU
	A8 (−)	ORN

   Is there about 4 Ω ?

   YES—Go to step 10.

   NO—If there is 1 MΩ or more, repair open in the wire pairs between the audio unit and speaker.■

10. Disconnect the speaker 2P connector.

11. Check audio unit connector A (17P) terminals No. 2, 3, 7, 8, 11, 12, 15, and 16 individually for continuity to body ground.

AUDIO UNIT CONNECTOR A (17P)

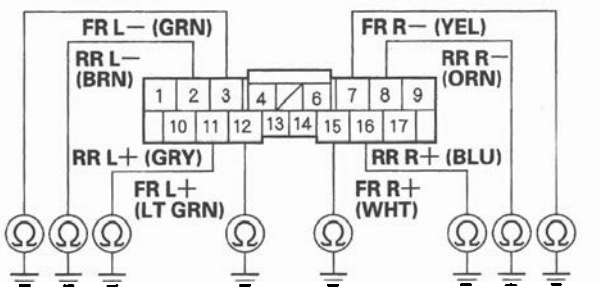

Wire side of female terminals

Is there continuity?

YES—Repair short to body ground in the wire between the audio unit and speaker.■

NO—Substitute a known-good audio unit and recheck. If the symptom/indication goes away, replace the original audio unit.■

Audio system sound is weak or distorted (display is normal)

1. Check for sound in each mode (AM, FM, XM, and disc).

   Is there sound from the speakers, and is the sound quality normal in each mode?

   YES—Intermittent failure. The system is OK at this time. Check for loose connections at the navigation unit, audio unit, amplifier, and each speaker. ■

   NO—Speakers all work, sound quality is poor. ■

   - If the sound quality is poor only with the XM radio, or the XM radio does not function, go to poor or no sound with XM radio (see page 23-68).
   - If the sound quality is poor only with the audio disc charger, or the audio disc charger does not function, go to poor or no sound with audio disc charger (see page 23-60).
   - If the sound quality is poor only with AM or FM radio, go to poor radio reception or interference (see page 23-32).
   - If sound is poor in all modes, go to sound quality diagnosis (see page 23-70).

Radio preset memory is lost

NOTE: If only the XM stations are lost, go to XM radio preset memory is lost (see page 23-67).

1. Set each of the radio station preset buttons.

   Do each of the buttons set properly?

   YES—Go to step 2.

   NO—
   - With navigation: Replace the navigation unit (see page 23-140). ■
   - Without navigation: Replace the audio unit (see page 23-76). ■

2. Turn the ignition switch OFF for 1 minute, then turn it back to ON (II).

3. Test the preset buttons for proper recall operation.

   Do the preset buttons recall the set radio stations?

   YES—System is normal at this time. Check the connections at the navigation unit or audio unit. ■

   NO—
   - With navigation: Replace the navigation unit (see page 23-140). ■
   - Without navigation: Replace the audio unit (see page 23-76). ■

Symptom Troubleshooting (cont'd)

Volume does not change

NOTE:
- Set the fader and balance positions to the center.
- On vehicles with navigation, audio button operation can be checked by doing the hard key status test in the navigation unit check screen. See navigation diagnosis mode (see page 23-122).

1. Turn on the audio unit, and listen for sound from the speakers.

   Is the sound normal?

   YES—Go to step 2.

   NO—Go to audio system sound is weak or distorted, or no sound is heard from speakers (see page 23-41). ■

2. Operate the volume knob to see if the volume changes.

   Does the volume change?

   YES—Operation is normal at this time. ■

   NO—
   - With navigation: Replace navigation unit (see page 23-140). ■
   - Without navigation: Replace audio unit (see page 23-76). ■

Volume does not increase with speed

1. Verify the (SVC) mode setting in the navigation or audio unit sound set-up.

   Is the (SVC) set to off?

   YES—Change the setting to "Mid" and reset (see page 23-6).

   NO—Go to step 2.

2. Do the self-diagnostic function for the vehicle speed pulse indication (see page 23-28).

   Does the self-diagnostic function indicate a VSP signal?

   YES—Substitute a known-good navigation or audio unit and retest. If the symptom/indication goes away, replace the original navigation or audio unit. ■

   NO—Go to step 3.

3. Test-drive the vehicle at highway speeds, and monitor if the volume increases with speed.

   Do the volume increase?

   YES—Intermittent failure, the system is OK at this time. ■

   NO—Go to step 4.

4. Remove the navigation unit (see page 23-140), or audio unit (see page 23-76), and disconnect the navigation, or audio unit connector A (17P).

5. Raise the vehicle on a lift.

6. Turn the ignition switch ON (II).

7. Press the brake pedal, and shift the transmission to D.

8. Slowly spin one of the front wheels by hand, and have an assistant measure voltage at navigation or audio unit connector A (17P) terminal No. 13.

AUDIO UNIT CONNECTOR A (17P)
NAVIGATION UNIT CONNECTOR A (17P)

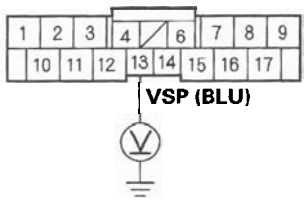

Wire side of female terminals

Is the 0—5 V pulse?

YES—
- With navigation: Replace the navigation unit (see page 23-140). ■
- Without navigation: Replace the audio unit (see page 23-76). ■

NO—Repair open or shorts in the wire between the navigation, or audio unit connector A (17P) No. 13 terminal and the PCM connector A (44P) No. 29 terminal. If no opens or shorts are found, substitute a known-good PCM and recheck. If the symptom/indicated goes away, replace the original PCM (see page 11-219). ■

Symptom Troubleshooting (cont'd)

Volume is too high or too low when driving at freeway speeds

1. Test-drive the vehicle at highway speeds and monitor volume level.

   Is the volume level too high or too low?

   YES—Go to step 2.

   NO—Internal failure, the system is OK at this time. ■

2. Try the (SVC) mode setting in sound set-up on "Low", "Mid", and "High" (see page 23-6).

   Is the volume level still too high, or too low?

   YES—
   - With navigation: Replace the navigation unit (see page 23-140). ■
   - Without navigation: Replace the audio unit (see page 23-76). ■

   NO—Improper (SVC) setting for the customer's sound preference. Advise the customer to try different SVC settings. ■

Radio tuner does not change stations

NOTE: On vehicles with navigation, audio button operation can be checked by doing the hard key status test in the navigation unit check screen. See navigation diagnosis mode (see page 23-122).

1. Check the audio information on the display panel.

   Does the audio information display properly?

   YES—Go to step 2.

   NO—Go to power switch will not turn ON (see page 23-38). ■

2. Operate the tuning knob to see if the radio station changes.

   Does the radio station change?

   YES—Intermittent failure: the tuning knob is OK at this time. ■

   NO—
   - With navigation: Replace navigation unit (see page 23-140). ■
   - Without navigation: Replace audio unit (see page 23-76). ■

Display does not dim or brighten with dimmer (without navigation)

1. Turn the ignition switch ON (II).
2. Turn the combination light switch ON and OFF to see if the symptom can be duplicated.

   Is the symptom duplicated?

   YES—Go to step 3.

   NO—Operation is normal at this time.■
3. Turn the combination light switch OFF.
4. Operate the illumination control dial.

   Is it normal?

   YES—Operation is normal at this time.■

   NO—Go to step 5.
5. Turn the ignition switch OFF.
6. Disconnect and check audio unit connector A (17P) for loose or a poor connection.■
7. Reconnect audio unit connector A (20P), and recheck the symptom.

   Does the display dim normally?

   YES—Go to step 8.

   NO—Operation is normal at this time.■
8. Turn the ignition switch to ON (II).
9. Measure the voltage between audio unit connector A (17P) No. 10 terminal and body ground.

AUDIO UNIT CONNECTOR A (17P)

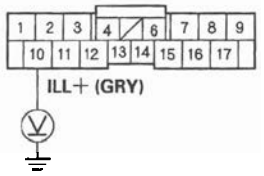

Wire side of female terminals

Is there battery voltage?

YES—Go to step 10.
NO—Check the No. 14 (7.5 A) fuse in the under-dash fuse/relay box. If the fuse is OK, repair open in the wire between the fuse and audio unit connector A (17P).■

10. Measure the voltage between audio unit connector A (17P) No. 1 and No. 10 terminals. Operate the dash brightness controller dial to see if the voltage changes.

AUDIO UNIT CONNECTOR A (17P)

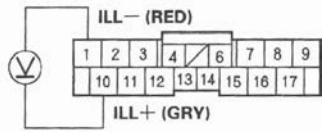

Wire side of female terminals

Does the voltage change?

YES—Substitute a known-good audio unit, and recheck. If the symptom/indication goes away, replace the original audio unit. If symptom is still present, substitute a known-good center panel display and recheck. If the symptom/indication goes away, replace the original center panel display (see page 23-76).■
NO—Repair open in the wire between the under-dash fuse/relay box and the gauge control module.■

Symptom Troubleshooting (cont'd)

Navigation unit button illumination does not work (with navigation)

1. Turn the ignition switch to ON (II).
2. Turn the combination lighting switch to the parking light position.
3. Check the illumination of the navigation unit buttons.

   Are the buttons illuminated?

   YES—Intermittent problem: The navigation unit is OK at this time. Check for loose or poor connections at the navigation unit connector A (17P).■

   NO—Go to step 4.
4. Check the illumination of several other buttons not related to the navigation system.

   Are the buttons illuminated?

   YES—Go to step 5.

   NO—Troubleshoot the dashboard illumination circuit. Check the No. 14 (7.5 A) fuse in the under-dash fuse/relay box.■
5. Turn the ignition switch OFF.
6. Disconnect navigation unit connector A (17P).
7. Disconnect gauge control module connector A (36P).
8. Check for continuity between navigation unit connector A (17P) No. 1 terminal and gauge control module connector A (36P) No. 1 terminal.

NAVIGATION UNIT CONNECTOR A (17P)
Wire side of female terminals

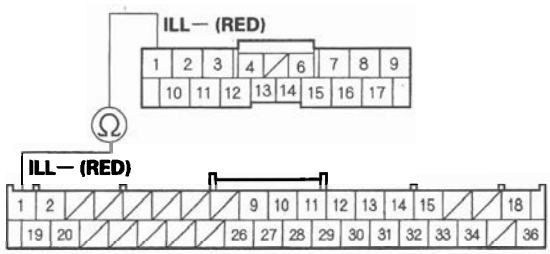

GAUGE CONTROL MODULE CONNECTOR A (36P)
Wire side of female terminals

Is there continuity?

YES—Go to step 9.

NO—Repair open in the wire between the gauge control module and the navigation unit.■

9. Turn the ignition switch to ON (II).
10. With the headlight switch still on, measure the voltage between navigation unit connector A (17P) No. 10 terminal and body ground.

NAVIGATION UNIT CONNECTOR A (17P)

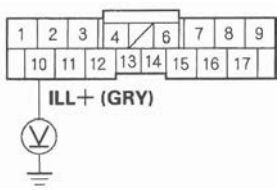

Wire side of female terminals

Is there battery voltage?

YES—Check the connections at navigation unit connector A (17P). If all connections are OK, replace the navigation unit (see page 23-140).■

NO—Check the No. 14 (7.5 A) fuse in the under-dash fuse/relay box. If the fuse OK, repair open in the wire between the under-dash fuse/relay box and the navigation unit.■

Audio unit button illumination does not work (without navigation)

1. Turn the ignition switch to ON (II).
2. Turn the combination lighting switch to the parking light position.
3. Check the illumination of the audio unit buttons.

   Are the buttons illuminated?

   YES—Intermittent problem: The audio unit is OK at this time. Check for loose or poor connections at the audio unit connector A (17P). ■

   NO—Go to step 4.

4. Check the illumination of several other buttons not related to the audio system.

   Are the buttons illuminated?

   YES—Go to step 5.

   NO—Troubleshoot the dashboard illumination circuit. ■

5. Turn the ignition switch OFF.
6. Disconnect audio unit connector A (17P).
7. Disconnect gauge control module connector A (36P).
8. Check for continuity between audio unit connector A (17P) No. 1 terminal and gauge control module connector A (36P) No. 1 terminal.

AUDIO UNIT CONNECTOR A (17P)
Wire side of female terminals

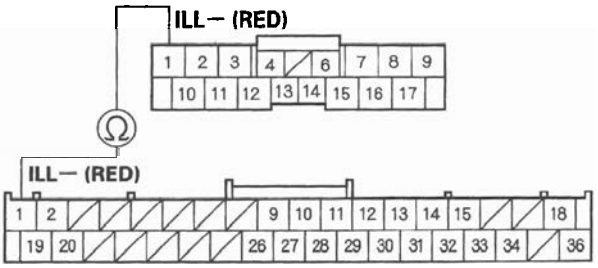

GAUGE CONTROL MODULE CONNECTOR A (36P)
Wire side of female terminals

Is there continuity?

YES—Go to step 9.

NO—Repair open in the wire between the gauge control module and the audio unit. ■

(cont'd)

Symptom Troubleshooting (cont'd)

9. Turn the ignition switch to ON (II).

10. With the headlight switch still on, check for voltage between audio unit connector A (17P) No. 10 terminal and body ground.

AUDIO UNIT CONNECTOR A (17P)

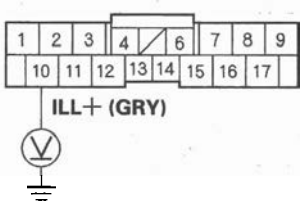

Wire side of female terminals

Is there battery voltage?

YES—Check the connections at audio unit connector A (17P). If all the connections are OK, replace the audio unit (see page 23-76).■

NO—Check the No. 14 (7.5 A) fuse in the under-dash fuse/relay box. If the fuse is OK, repair open in the wire between the under-dash fuse/relay box and the audio unit.■

Audio remote switch does not work properly

NOTE: On vehicles with navigation, audio button operation can be checked by doing the hard key status test in the navigation unit check screen. See navigation diagnosis mode (see page 23-122).

1. Test the audio remote switch (see page 23-82).

   Is the audio remote switch OK?

   YES—Go to step 2.

   NO—Replace the audio remote switch.■

2. Check the audio unit operation (volume up, volume down, CH (−), CH (+), MODE).

   Is the audio unit operation OK?

   YES—
   - With navigation: Go to step 3.
   - Without navigation: Go to step 6.

   NO—
   - With navigation: Replace the navigation unit (see page 23-140).■
   - Without navigation: Replace the audio unit (see page 23-76).■

3. Remove the navigation unit (see page 23-140).

4. Measure the resistance between navigation unit connector B (22P) No. 6 and No. 7 terminals as specified in the table.

NAVIGATION UNIT CONNECTOR B (22P)

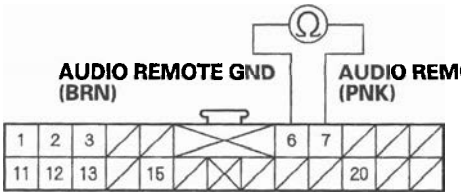

Wire side of female terminals

AUDIO REMOTE SWITCH TABLE

Button held down	VOL DOWN	VOL UP	CH (−)	CH (+)	MODE	(NONE)
Resistance	about 100 Ω	about 370 Ω	about 780 Ω	about 2.0 KΩ	about 4.0 KΩ	10 kΩ

Is the resistance OK?

YES—Go to step 5.

NO—Repair open or high resistance in the circuit between the navigation unit and the audio remote switch. If the wires are OK, replace the cable reel (see page 24-173). ■

5. Check for continuity between the No. 6 and No. 7 terminals of navigation unit connector B (22P) and body ground.

NAVIGATION UNIT CONNECTOR B (22P)

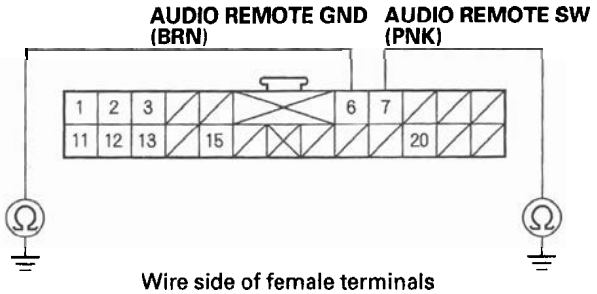

Wire side of female terminals

Is there continuity?

YES—Repair short to body ground in the circuit between the navigation unit and the audio remote switch. If the wires are OK, replace the cable reel (see page 24-173). ■

NO—Replace the navigation unit (see page 23-140). ■

(cont'd)

Symptom Troubleshooting (cont'd)

6. Remove the audio unit (see page 23-76).

7. Measure the resistance between audio unit connector B (20P) No. 6 and No. 7 terminals as specified in the table.

AUDIO UNIT CONNECTOR B (20P)

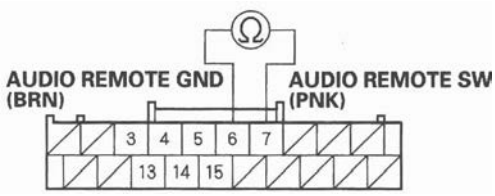

Wire side of female terminals

AUDIO REMOTE SWITCH TABLE

Button held down	VOL DOWN	VOL UP	CH (−)	CH (+)	MODE	(NONE)
Resistance	about 100 Ω	about 370 Ω	about 780 Ω	about 2.0 KΩ	about 4.0 KΩ	10 kΩ

Is the resistance OK?

YES—Go to step 8.

NO—Repair open or high resistance in the circuit between the audio unit and the audio remote switch. If the wires are OK, replace the cable reel (see page 24-173).■

8. Check for continuity between the No. 6 and No. 7 terminals of the audio unit connector B (20P) and body ground.

AUDIO UNIT CONNECTOR B (20P)

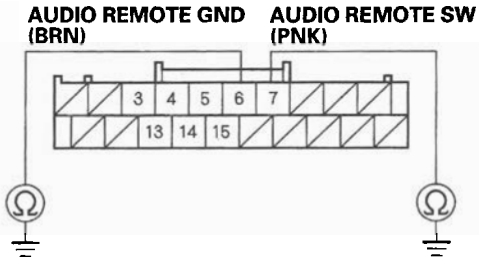

Wire side of female terminals

Is there continuity?

YES—Repair short to body ground in the circuit between audio unit and the audio remote switch. If the wires are OK, replace the cable reel (see page 24-173).■

NO—Replace the audio unit (see page 23-76).■

Audio disc does not load

NOTE:
- Disc labels should not be used in the navigation unit or audio unit. They may damage the player mechanism.
- Make sure the CD is compatible with the system (see the owner's manual for more information).

1. Insert a known-good disc to see if the symptom can be duplicated.

   Does the disc load?

   YES—Operation is normal. If the disc loads normally, but will not play, go to audio disc does not play (see page 23-58).■

   NO—Go to step 2.

2. Insert another disc.

   Does the disc load?

   YES—The original disc is faulty.■

   NO—
   - With navigation: Replace navigation unit (see page 23-140).■
   - Without navigation: Replace audio unit (see page 23-76).■

Audio disc does not eject

NOTE: Disc labels should not be used in the navigation unit or audio unit. They may damage the player mechanism.

1. Turn on the audio system.

   Does the system turn on?

   YES—Go to step 2.

   NO—Go to power switch will not turn ON (see page 23-38).■

2. Check to see if the disc ejects correctly with no binding by pushing the EJECT button.

   Does the disc eject normally?

   YES—Operation is normal.■

   NO—
   - With navigation: Replace navigation unit (see page 23-140).■
   - Without navigation: Replace audio unit (see page 23-76).■

Symptom Troubleshooting (cont'd)

Audio disk cannot be inserted and/or ejected (with navigation)

NOTE:
- Disc labels should not be used in the navigation unit or audio unit. They may damage the player mechanism.
- Make sure the CD is compatible with the system (see the owner's manual for more information).

1. Press the OPEN/CLOSE button to open the navigation display.
2. Check the disc indicator.

   Does the disc indicator light on?

   YES—Go to step 4.

   NO—Go to step 3.
3. Try inserting an audio CD.

   Does the player accept the CD?

   YES—The system is OK at this time.■

   NO—Go to step 4.
4. Press the CD eject button.

   Does the player eject the CD?

   YES—The system is OK at this time.■

   NO—Replace the navigation unit (see page 23-140). ■

Special Tools Required
Diagnostics CD 07AAZ-SDBA100

Audio disc does not play

1. Try loading a known-good disc.

   Does the disc load?

   YES—Go to step 2.

   NO—Go to audio disc does not load (see page 23-57).■
2. Insert another known-good disc to see if the symptom can be duplicated.

   Does the disc play?

   YES—Operation is normal.■

   NO—Go to step 3.
3. Insert the audio diagnostic CD (T/N: 07AAZ-SDBA100) in the navigation unit or audio unit.

   Does the disc play?

   YES—The original disc is faulty, or has an unreadable format.■

   NO—
   - With navigation: Replace navigation unit (see page 23-140).■
   - Without navigation: Replace audio unit (see page 23-76).■

Special Tools Required
Diagnostics CD 07AAZ-SDBA100

Audio disc skips

1. Confirm the vehicle's tires are properly inflated with no cupping or flat spots.

2. Check the customer's CD for scratches, fingerprints, and marks.

   NOTE: The following test should be done with audio unit bass and treble set to customers listening performance. When comparing to known-good vehicles, the comparison should be done on same model and trim level.

3. Test drive to identify when the customer's CD skips. The audio diagnostic CD (T/N: 07AAZ-SDBA100) can be used if customer's CD is not available. Use tracks 10—12.

   Does the CD skip?

   YES—Go to step 4.

   NO—Operation is normal. ■

4. Compare the customer's CD that is skipping in a known-good vehicle under the same conditions.

   Does the CD skip in the known-good vehicle under the same conditions?

   YES—Operation is normal. ■

   NO—Go to step 5.

   NOTE: Do the following test with vehicle parked and engine running.

5. Insert the diagnostic skip test CD (T/N: 07AAZ-SDBA300) (ABEX TCD 721). Play tracks 2—11 and note the track number(s) where the CD starts skipping. Do the same test on a known-good vehicle.

   Does the CD skip on same track number(s) as the known-good vehicle?

   YES—Operation is normal at this time. ■

   NO—Go to step 6.

6. Insert the diagnostic skip test CD (T/N: 07AAZ-SDBA200) (ABEX TCD 725B) play tracks 7—11 and tracks 13—15 and note the track number(s) where the CD starts skipping. Do the same test on a known-good vehicle.

   Does the CD skip on same track number(s) as known-good vehicle?

   YES—Operation is normal. ■

   NO—
   - With navigation: Replace navigation unit (see page 23-140). ■
   - Without navigation: Replace audio unit (see page 23-76). ■

Symptom Troubleshooting (cont'd)

Poor or no sound with audio disc changer

1. Go into the Diagnostic Menu and use the "Navi System Link" test (see page 23-122) to check the audio disc changer.

   Is "CD-C" icon green?

   YES—Go to step 2.

   NO—Go to step 5.

2. Disconnect navigation unit connector E (14P), audio disc changer 13P connector, and XM receiver connector A (14P) (if equipped).

3. Check for continuity between audio disc changer 13P connector and body ground according to the table. Then check for continuity between the same terminals listed in the table and navigation unit connector E (14P) No. 4 terminal (the harness shield).

Audio disc changer connector	Wire color
5	GRN
13	BLK
4	RED
12	WHT

   Is there continuity?

   YES—Replace the appropriate shielded harness. ■

   NO—Go to step 4.

4. Check for continuity between audio disc changer 13P connector and navigation unit connector E (14P) according to the table.

Audio disc changer connector	Navigation unit connector	Wire color
5	E6	GRN
13	E14	BLK
4	E5	RED
12	E13	WHT

   Is there continuity?

   YES—Substitute a known-good audio disc changer, then reconnect the all connectors and recheck. If the symptom/indication goes away, replace the original audio disc changer. If the symptom/indication is still present, disconnect the XM receiver (if equipped). If the symptom/indication goes away, replace the XM receiver. If the symptom/indication is still present, replace the navigation unit (see page 23-140). ■

   NO—Repair open in the wire between the navigation unit and the audio disc changer. ■

5. Disconnect navigation unit connector E (14P), audio disc changer 13P connector, and XM receiver connector A (14P) (if equipped).

6. Check for continuity between audio disc changer 13P connector and body ground according to the table. Then check for continuity between the same terminals listed in the table and navigation unit connector E (14P) No. 3 terminal (the harness shield).

Audio disc changer connector	Wire color
3	BLU
8	PNK

Is there continuity?

YES—Replace the appropriate shielded harness.■

NO—Go to step 7.

7. Check for continuity between audio disc changer 13P connector and navigation unit connector E (14P) according to the table.

Audio disc changer connector	Navigation unit connector	Wire color
3	E9	BLU
8	E10	PNK
1	E11	LT BLU
7	E2	PUR
6	E1	ORN

Is there continuity?

YES—Substitute a known-good audio disc changer, then reconnect the all connectors and recheck. If the symptom/indication goes away, replace the original audio disc changer. If the symptom/indication is still present, disconnect the XM receiver (if equipped). If the symptom/indication goes away, replace the XM receiver. If the symptom/indication is still present, replace the navigation unit (see page 23-140).■

NO—Repair open in the wire between the navigation unit and the audio disc changer.■

Symptom Troubleshooting (cont'd)

PC card will not play/card icon on audio screen cannot be selected (with navigation)

- The card may not be fully inserted into the slot. Eject the card, and inspect for warping or damage to the edge connector. Never use excessive force to insert a card. This can result in damage to the pins in the rear of the slot.
  The customer's card may contain audio files that are not recognized by the system. Only MP3 and WMA music files are played.
- The flash card type may not be accepted by the system. Only compact flash and ATA cards have been tested.
- The card's PCMCIA adaptor may be preventing a known-good card from playing. New PCMCIA adaptors are constantly being released, and have not been tested.
- The card's capacity may exceed 2 GB. Only cards with capacities of up to 2 GB (2000 MB) have been tested.
- There may not be any files on the card. If the card has "write protection," make sure it is turned off before putting files on the card.
- Although flash memory chips are reliable, occasionally they develop bad sectors or other formatting errors that prevents them from playing. The customer should reformat the card using the FAT or FAT32 format.
- The card may have been damaged by heat. Suggest that the customer remove their card when exiting the vehicle.
- The customer may have formatted the card using the format "NTFS". Only the FAT and FAT32 formats are accepted by the system.
- Hard disc drive (HDD) cards may not work properly in the system and can overheat and quit functioning, particularly in a hot vehicle. They are not recommended.
- The filing structure of the card may exceed the specification of 8 folder levels deep, 99 folders maximum, and 999 total tracks maximum. If any of these limitations is exceeded, the system may not properly display or play the tracks.

NOTE: A delay when first inserting a card is normal. The system is reading the "File Tag" information for Album names, Artist, and Song titles and there is no "hour glass." The delay length depends on the number of tracks, and the complexity of the folder structure. See the audio section glossary for explanation of the terms used above.

Error code: XM NO SIGNAL or XM ANTENNA is displayed

NOTE: Check XM radio reception in an open area. Poor reception/interference can be caused by tall buildings, mountains, or high-voltage power lines.

1. Park vehicle outside with a clear view of the southern horizon.

   Does XM radio receive a signal?

   YES—Reception interference operation is normal at this time.■

   NO—Go to step 2.

2. Check XM antenna connector B (2P) at the XM receiver.

   Is XM antenna connector B connected?

   YES—Go to step 3.

   NO—Reconnect XM connector B, and recheck the XM radio operation. If signals are restored, operation is normal. If signals are not restored, go to step 3.

3. Turn the ignition switch to accessory (I).

4. Check the voltage between XM receiver connector A (14P) No. 1 terminal and body ground.

XM RECEIVER CONNECTOR A (14P)

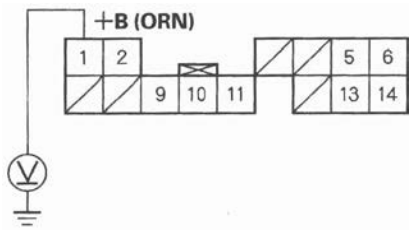

Wire side of female terminals

Is there battery voltage?

YES—Go to step 5.

NO—Check the No. 23 (10 A) fuse (and the No. 17 (15 A) fuse, if equipped with navigation) in the under-hood fuse/relay box. If the fuse(s) are OK, and the audio system works normally in all other ways, repair open in the wire between the navigation unit (with navigation) or audio unit (without navigation) and XM receiver connector A (14P) No. 1 terminal.■

(cont'd)

Symptom Troubleshooting (cont'd)

5. Measure the voltage between XM receiver connector A (14P) No. 11 terminal and body ground.

XM RECEIVER CONNECTOR A (14P)

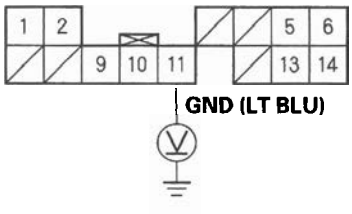

Wire side of female terminals

Is there less than 0.1 V?

YES—Go to step 6.

NO—Repair open in the wire between XM receiver connector A (14P) No. 11 terminal and body ground (G504) (see page 22-30).■

6. Substitute a known-good XM antenna.

Does the XM radio receiver a signal?

YES—Replace XM antenna (see page 23-83).■

NO—Substitute a known-good XM antenna subharness. If the XM radio receives signals, replace the original XM antenna subharness. If the XM radio does not receive signals, substitute a known-good XM receiver unit. If the XM radio receives signals, replace the XM receiver unit. If the XM radio does not receive signals, replace the XM antenna lead.■

XM radio display is blank and no station information is displayed

1. Disconnect audio disc changer 13P connector.
2. Turn the ignition switch to ACC (I).
3. Operate the XM radio, and check the display.

Is XM information displayed?

YES—Replace the audio disc changer.■

NO—Go to step 4.

4. Check the No. 34 (7.5 A) fuse in the under-dash fuse/relay box and the No. 23 (10 A) fuse (and the No. 17 (15 A) fuse, with navigation) in the under-hood fuse/relay box.

Are the fuse OK?

YES—Go to step 5.

NO—Replace the fuse.■

5. Measure the voltage between XM receiver connector A (14P) No. 1 terminal and body ground.

XM RECEIVER CONNECTOR A (14P)

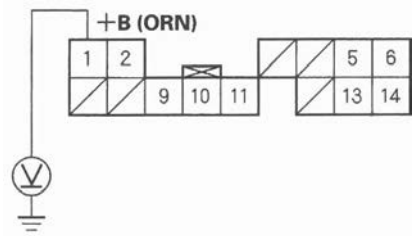

Wire side of female terminals

Is there battery voltage?

YES—Go to step 6.

NO—Repair open in the wire between fuse No. 17 (15 A) under-hood fuse/relay box and XM receiver connector A (14P) No. 1 terminal.■

6. Check the voltage between XM receiver connector A (14P) No. 11 terminal and body ground.

XM RECEIVER CONNECTOR A (14P)

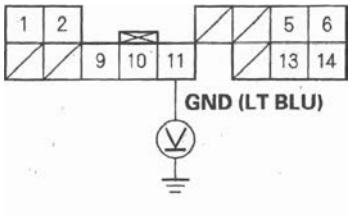

Wire side of female terminals

Is there less than 0.2 V?

YES—Go to step 7.

NO—Repair open or high resistance in the wire between the XM receiver connector A (14P) No. 11 terminal and navigation unit connector E (14P) No. 11 terminal (with navigation) or audio unit connector E (14P) No. 11 terminal (without navigation) and navigation unit connector A (17P) terminal No. 9 and G504 (with navigation) or audio unit connector A (17P) terminal No. 9 and G504 (without navigation). ■

7. Turn the ignition switch OFF.

8. Measure the voltage between navigation unit connector E (14P) No. 2 terminal (with navigation) or audio unit connector E (14P) No. 2 terminal and body ground.

NAVIGATION UNIT CONNECTOR E (14P) or AUDIO UNIT CONNECTOR E (14P)

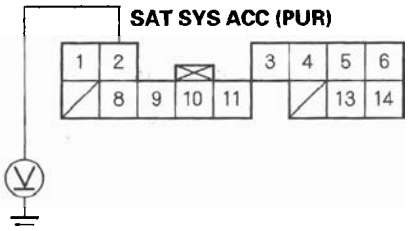

Wire side of female terminals

Is there 10 V or more?

YES—Go to step 9.

NO—Substitute a known-good XM receiver and recheck. If there is now 10 V or more are present, replace the original XM receiver (see page 23-78). ■

(cont'd)

Symptom Troubleshooting (cont'd)

9. Turn the ignition switch ON (II).

10. Measure the voltage between the navigation unit connector E (14P) No. 2 terminal (with navigation) or audio unit connector E (14P) No. 2 terminal (without navigation) and body ground.

NAVIGATION UNIT CONNECTOR E (14P) or AUDIO UNIT CONNECTOR E (14P)

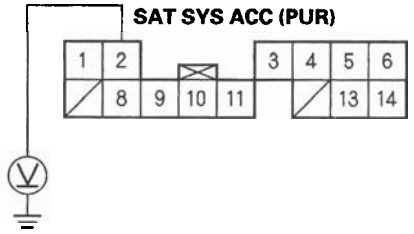

Wire side of female terminals

Is there less than 0.5 V?

YES—Go to step 11

NO—Substitute a known-good navigation unit (with navigation) or audio unit (without navigation) and recheck. If there is now 0.5 V or less, replace the original navigation unit (with navigation) or audio unit (without navigation).■

11. Turn the ignition switch OFF.

12. Disconnect navigation unit connector E (14P) (with navigation) or audio unit connector E (14P) (without navigation) and XM receiver connector A (14P).

13. Check for continuity between XM receiver connector A (14P) and body ground according to the table. Then check for continuity between the same terminals listed in the table and navigation unit connector E (14P) No. 3 terminal (with navigation) or audio unit connector E (14P) No. 3 terminal (without navigation) (the harness shield).

XM receiver connector	Wire color
A9	BLU
A10	PNK
A2	PUR

Is there continuity?

YES—Repair a short in the wire between the navigation unit (with navigation) or audio unit (without navigation) and the XM receiver, or replace the appropriate shielded harness.■

NO—Go to step 14.

14. Check for continuity between XM receiver connector A (14P) and navigation unit connector E (14P) (with navigation) or audio unit connector E (14P) (without navigation) according to the table.

XM receiver connector	Navigation unit or audio unit connector	Wire color
		PUR

Is there continuity?

YES—Substitute a known-good XM receiver, then reconnect all connector and recheck. If the symptom/indication goes away, replace the original XM receiver. If symptom/indication is still present, replace the navigation unit (see page 23-140) (with navigation) or audio unit (see page 23-76) (without navigation). If the symptom/indication is still present, replace the audio disc changer (see page 23-79).■

NO—Replace the affected shield harness between navigation unit (with navigation) or audio unit (without navigation) and XM receiver.■

XM radio preset memory is lost

NOTE: If you can only tune to channels 000, 001, 174, and 247, make sure the audio unit is set to the channel mode (see owner's manual). If it is set to channel mode, call XM satellite radio customer support, and check the account activation status.

1. Set each of the XM radio channel preset buttons.

   Do each of the XM radio channel preset buttons set properly?

   YES—Go to step 2.

   NO—Go to step 4.

2. Turn the ignition switch OFF for 1 minute, then turn it back to ON (II).

3. Test all of the XM radio channel preset buttons for proper recall operation.

   Do the preset buttons recall the set radio stations?

   YES—System is normal at this time. Check the connections at the navigation unit or audio unit. ■

   NO—Go to step 4.

4. Turn the ignition switch OFF.

5. Measure the voltage between XM receiver connector A (14P) No. 1 terminal and body ground.

XM RECEIVER CONNECTOR A (14P)

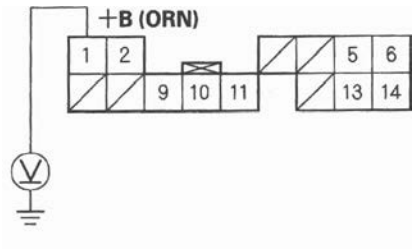

Wire side of female terminals

Is there battery voltage?

YES—Go to step 6.

NO—Repair open in the wire between the under-dash fuse/relay box and XM receiver connector A (14P) No. 1 terminal. ■

6. Turn the ignition switch ON (II).

7. Measure the voltage between XM receiver connector A (14P) No. 11 terminal and body ground.

XM RECEIVER CONNECTOR A (14P)

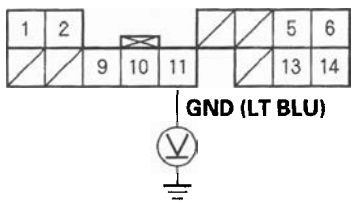

Wire side of female terminals

Is there less than 0.2 V?

YES—Replace the XM receiver (see page 23-78). ■

NO—Repair open in the wire between XM receiver connector A (14P) No. 11 terminal and body ground (G504) (see page 22-30). ■

Symptom Troubleshooting (cont'd)

Poor or no sound with XM radio (navigation unit can display XM channels) (with navigation)

1. Disconnect the audio disc changer.
2. Turn the ignition switch ON (II).
3. Check the XM radio sound quality.

   Is the symptom still present?

   YES—Go to step 4.

   NO—Replace the audio disc changer.■

4. Go into the Diagnostic Menu, and use the "Navi System Link" test (see page 23-122) to check the audio disc changer.

   Is "XM" icon green?

   YES—Go to step 5.

   NO—Go to step 8.

5. Disconnect navigation unit connector E (14P) and XM receiver connector A (14P).
6. Check for continuity between XM receiver connector A (14P) and body ground according to the table. Then check for continuity between the same terminals listed in the table and navigation unit connector E (14P) No. 4 terminal (the harness shield).

XM receiver connector	Wire color
A6	GRN
A14	BLK
A5	RED
A13	WHT

   Is there continuity?

   YES—There is a short in the wire between the navigation unit and the XM receiver. Replace the appropriate shielded harness.■

   NO—Go to step 7.

7. Check for continuity between XM receiver connector A (14P) and navigation unit connector E (14P) according to the table.

XM receiver connector	Navigation unit connector	Wire color
A6	E6	GRN
A14	E14	BLK
A5	E5	RED
A13	E13	WHT

   Is there continuity?

   YES—Substitute a known-good XM receiver, then reconnect the all connectors and recheck. If the symptom/indication goes away, replace the original XM receiver. If the symptom/indication is still present, replace the navigation unit (see page 23-140).■

   NO—There is an open in the wire between the navigation unit and the XM receiver. Replace the appropriate shielded harness.■

8. Check for continuity between XM receiver connector A (14P) and body ground according to the table. Then check for continuity between the same terminals listed in the table and navigation unit connector E (14P) No. 3 terminal (the harness shield).

XM receiver connector	Wire color
A9	BLU
A10	PNK

Is there continuity?

YES—There is a short in the wire between the navigation unit and the XM receiver. Replace the appropriate shielded harness.■

NO—Go to step 9.

9. Check for continuity between XM receiver connector A (14P) and navigation unit connector E (14P) according to the table.

XM receiver connector	Navigation unit connector	Wire color
A9	E9	BLU
A10	E10	PNK
A11	E11	LT BLU
A2	E2	PUR
A1	E1	ORN

Is there continuity?

YES—Substitute a known-good XM receiver, then reconnect the all connectors and recheck. If the symptom/indication goes away, replace the original XM receiver. If the symptom/indication is still present, replace the navigation unit (see page 23-140).■

NO—If there is an open in the BLU or PNK wire, replace the appropriate shielded harness. For the remaining wires, repair open in the wire between the navigation unit and the XM receiver.■

Sound Quality Diagnosis

Special Tools Required
Diagnostics CD 07AAZ-SDBA100

Use the following tests to check sound quality.

NOTE: Before beginning the following tests, write down the customer's bass, treble, fader and balance settings, and then set them to their center positions for testing.

Left/Right Channel ID

Do this test to confirm proper channel routing.

1. Insert the audio diagnostic CD (T/N: 07AAZ-SDBA100) into the navigation unit or audio unit.
2. Play track No. 1 (left, both, right channel ID) at a normal, or slightly higher than normal, volume level.
3. The voice should be audible only from the channel or channels when indicated.
   - If the channel ID is correct for each side, go to the phase test.
   - If the channel ID is not correct, check for;
     – Shorted speaker wire
     – Faulty amplifier (with premium sound system)
     – Faulty navigation unit
     – Faulty audio unit

Special Tools Required
Diagnostics CD 07AAZ-SDBA100

Phase Test

Do this test to confirm proper speaker phasing.

1. Insert the audio diagnostic CD (T/N: 07AAZ-SDBA100) into the navigation unit or audio unit.
2. Play track No. 2 (phase) at a normal, or slightly higher than normal, volume level.
3. The voice should sound centered and focused when it is in-phase.
4. The voice should sound diffused, and have "less bass" when it is out of phase.
   - If the voice changes from in-phase to out of phase as indicated by the prompt, the phasing is correct. Go to electrical noise test.
   - If the voice always sounds out of phase, phasing is not correct. Check for;
     – Crossed speaker wires
     – Faulty amplifier (with premium sound system)
     – Faulty navigation unit
     – Faulty audio unit

Special Tools Required
Diagnostics CD 07AAZ-SDBA100

Electrical Noise Test

Do this test to check for electrical noise being induced into the audio system.

NOTE: Electrical noise may be caused by outside sources that cannot be prevented by the audio system. Make sure you remove any cell phones and/or turn off any aftermarket device before beginning this test.

1. Insert the audio diagnostic CD (T/N: 07AAZ-SDBA100) into the navigation unit or audio unit.
2. Play track No. 4 (digital zero) at a normal, or slightly higher than normal, volume level.
3. Operate any electrical device that may create electrical noise in the audio system, including starting the engine.
4. Play track No. 5 (near digital zero) at a normal, or slightly higher than normal, volume level.
5. Operate any electrical device that may create electrical noise in the audio system, including starting the engine.
6. Play track No. 6 (SNR) at a normal, or slightly higher than normal, volume level.
7. Operate any electrical device that may create electrical noise in the audio system, including starting the engine.

   - If no abnormal noise is heard, go to individual speaker test.
   - If the noise is present only during the SNR track, replace the navigation unit or audio unit.
   - If the noise is heard during the digital zero or near digital zero track, check for;
     - Poor ground for the audio unit, amplifier, engine or battery cable
     - Pinched or shorted speaker or amplifier wire
     - Faulty amplifier (with premium sound system)
     - Faulty navigation unit
     - Faulty audio unit
     - Other faulty components causing excessive electrical noise (ignition coils, fuel pump, alternator, door lock actuators, etc.). Disconnect any suspect components, and then replay the tracks that were originally noisy. If the noise is gone, check the component's circuit and the component.

Sound Quality Diagnosis (cont'd)

Special Tools Required
Diagnostics CD 07AAZ-SDBA100

Individual Speaker Test

Do this test to identify a faulty speaker.

1. Insert the audio diagnostic CD (T/N: 07AAZ-SDBA100) into the navigation unit or audio unit.
2. Play track No. 30 (steady 300 Hz tone) at a normal, or slightly higher than normal, volume level.
3. Listen to each speaker for poor sound compared to the other speakers. Use the audio unit's fader and balance settings to help isolate the channel with the problem.
   - If the sound quality produced by a specific speaker is poor, substitute it with a known-good speaker. If the poor sound quality continues, go to the sound balance test.
   - If the sound quality is OK, go to the sound balance test.

Special Tools Required
Diagnostics CD 07AAZ-SDBA100

Sound Balance Test

Perform this test to identify a faulty channel or speaker.

1. Insert the audio diagnostic CD (T/N: 07AAZ-SDBA100) into the navigation unit or audio unit.
2. Confirm the bass and treble are set to the center positions.
3. Play track No. 3 (pink noise) at a normal, or slightly higher then normal, volume level.
4. A "static" type sound should be heard through all speakers.
5. Insert the audio diagnostic CD (T/N: 07AAZ-SDBA100) into the navigation unit or audio unit of a known-good vehicle.
6. Set the bass and treble to the center position.
7. Play track No. 3 (pink noise) all the same level as was played in step 3.
8. Compare the sounds made by the two vehicles.
   - If the noise sounds made by the two vehicles are very similar, go to the Frequency Sweep Test (see page 23-73).
   - If the sound does not have as much bass, check the subwoofer and circuit.
   - If the sound does not have enough "hiss," check the tweeters and their circuits.

Special Tools Required
Diagnostics CD 07AAZ-SDBA100

Frequency sweep

Do this test to find rattles or reverberation that may cause a perception of poor sound quality.

1. Insert the audio diagnostic CD (T/N: 07AAZ-SDBA100) into the navigation unit or audio unit.
2. Play track No. 13 (sweep from 500 Hz to 35 Hz) at a normal, or slightly higher than normal, volume level.
3. Listen to each speaker for poor sound quality or reverberations caused by specific frequencies. Use the voice-over to estimate the frequency that causes the vibration. Use the audio unit's fader and balance settings to help isolate the channel with the problem.
   - If you hear vibrations or poor sound quality, go to step 4.
   - If you do not hear any vibrations or poor sound quality, go to sound judging.
4. Choose the appropriate track from No. 14 to 25 (small range frequency sweep) or 26 to 53 (single frequencies) to recreate the frequency that caused the poor sound quality or vibration located in step 3; this helps diagnose the cause.

   NOTE: When you get to the track that recreates the problem, select the repeat function on the navigation unit or audio unit; this helps you isolate the cause.
5. Replace or insulate the source of the vibrations or, if the speaker is the source of the poor sound quality, replace it.

Special Tools Required
Diagnostics CD 07AAZ-SDBA100

Sound judging

- Do this test to compare overall sound quality, imaging, and dynamics between the customer's vehicle and a known-good vehicle. Only use a vehicle of the same model and trim level for this test.
- Make sure the vehicle is using only OEM speakers.

1. In the customer's vehicle, set the bass, treble, fader, and balance settings to the customer's normal settings that were written down before beginning testing.
2. Insert the audio diagnostic CD (T/N: 07AAZ-SDBA100) into the navigation unit or audio unit.
3. Play tracks No. 7 to 12 (sound quality, midland, dynamics, and imaging demonstration tracks) at a normal, or slightly higher than normal, volume level. Write down the volume setting being used.
4. Listen to areas of the track that stand out as being either very clear, or poorer than other areas of the track.
5. Insert the audio diagnostic CD (T/N: 07AAZ-SDBA100) into the navigation unit or audio unit of a known-good vehicle.
6. Play the tracks at the same volume level and the same bass, treble, balance, and fader settings as used in step 3 in the customer's vehicle.
7. Listen to the same area of the track that stood out as being either very clear or poorer than other areas of the track.

(cont'd)

Sound Quality Diagnosis (cont'd)

8. Compare the customer's vehicle's sound quality results to the known-good vehicle's results.

   - If the sound quality in the customer's vehicle is comparable to the sound quality in the known-good vehicle, then the customer's vehicle is operating as designed.
   - If the sound quality is not comparable, check these items in order.
     - Loose or improperly installed speakers or other hardware that may become excited by the vibrations generated by the speakers
     - Poor power or ground to the stereo amplifier (with premium sound system)
     - Damaged speaker(s)
     - Faulty amplifier (with premium sound system)
     - Faulty navigation unit
     - Faulty audio unit

Seek Stop Test

Do this test to check the performance of the audio unit's AM and FM reception. Refer to symptom troubleshooting: audio sound weak or distorted, or no sound is heard from speakers (display is normal) (see page 23-41) before continuing with this test.

NOTE:
- Window tint, aftermarket theft-recovery devices, radar detectors, and other aftermarket accessories may reduce radio reception.
- Changes in cloud cover and other atmosphere conditions will affect the ability of the navigation unit or audio unit to receive radio signals.

1. Park the customer's vehicle in an open area away from buildings, high power lines, or other obstructions.
2. Park a known-good vehicle (same year, model, and trim level) next to the customer's vehicle, facing the same direction.
3. Start the engine in the customer's vehicle, and turn on the radio.
4. Set the FM receiver to 87.7 MHz.
5. Press the "Seek +" button and record the first station that the navigation unit or audio unit locks onto.
6. Press the "Seek +" button repeatedly, and write down each station that the navigation unit or audio unit locks onto until the station recorded in step 5 is reached again.
7. Set the AM receiver to 530 kHz.
8. Press the "Seek +" button, and record the first station that the navigation unit or audio unit locks on to.
9. Press the "Seek +" button repeatedly, and write down each station that the navigation unit or audio unit locks onto until the station recorded in step 8 is reached again.

10. Turn the ignition switch to LOCK (0).

11. Start the engine in the known-good vehicle, and then perform steps 4 thru 10 on the known-good vehicle.

12. Compare the number of stations received in steps 6 and 9 in the customer's vehicle with the number of stations received in the known-good vehicle.

    - If the number of stations received is the same, or within 10 %, the audio unit's tuner performance is OK. The problem may be atmospheric conditions, multi path interference, or other obstructions to the radio signal.
    - If the customer's vehicle receives fewer stations by at least 10 %, go to step 2 of poor radio reception of interference (see page 23-32).

Audio Unit Removal/Installation

Without navigation

SRS components are located in this area. Review the SRS component location (see page 24-13).
Also review the precautions and procedures (see page 24-15) in the SRS section before doing repairs or service.

NOTE:
- Put on gloves to protect your hands.
- Take care not to scratch the dashboard and related parts.
- Lay a workshop towel under the parts when working on them to protect the face panel from scratches or other damage.
- Do not work in a dusty or dirty place.
- Discharge static electricity from your body before and during the work.
- Do not touch the circuit board(s) with your bare hands.
- Do not work with dirty hands.
- Be careful not to fold the flat plate cable.

1. Make sure you have the anti-theft code for the audio system, then write down the XM radio presets.

2. Remove the center vent (see page 20-93) and HVAC control unit (see page 21-53).

3. Remove the audio unit mounting bolts (A).

LX model

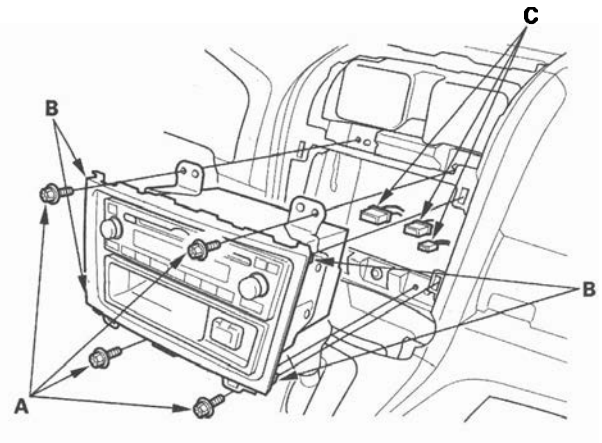

Except LX model

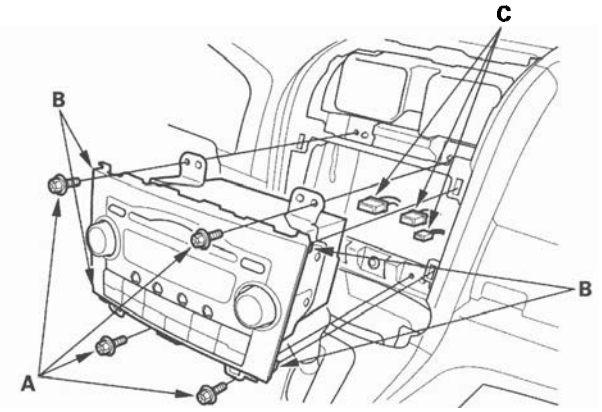

4. Pull the audio unit away from the dashboard to release the locking clips (B), then disconnect the connectors (C).

5. Disconnect the connectors (A) (LX model), then remove the bolts, brackets (B), center panel (C) (LX model), and the audio pockets (D) (1DIN type).

LX model

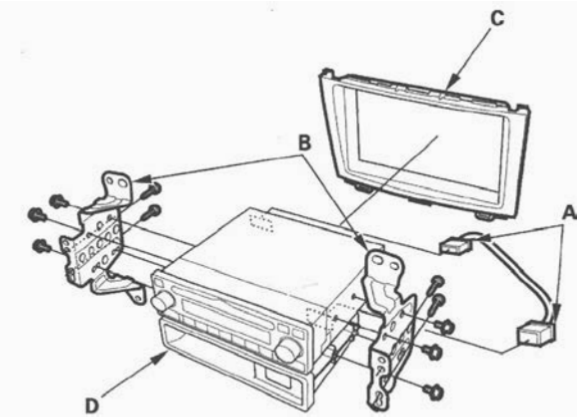

Except LX model

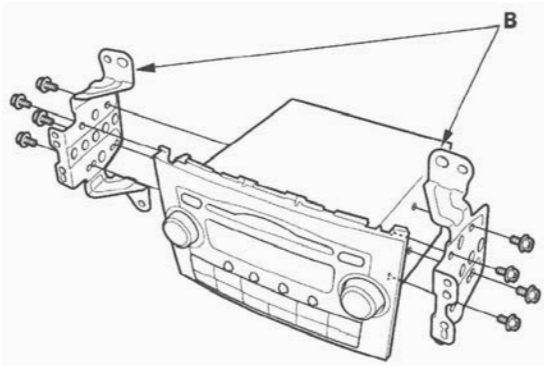

6. Except LX model: Remove the screws and release the clips around the perimeter of the center panel display (A), then remove the audio unit (B) from the center panel display.

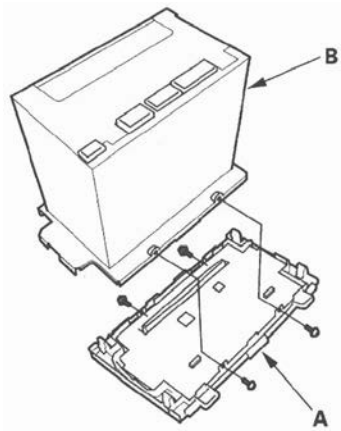

7. Install the audio unit in the reverse order of removal, and note these items:

- Make sure all connectors and antenna lead are secure.
- Enter the anti-theft code for the audio system enter the XM radio presets (if equipped), then set the clock.
- When installing a new or remanufactured audio unit, update the anti-theft code information.

Stereo Amplifier Removal/ Installation

1. Remove the front console cover (see page 20-102).
2. Remove the center lower cover (see page 20-95).
3. Disconnect the connectors (A) from the stereo amplifier (B).

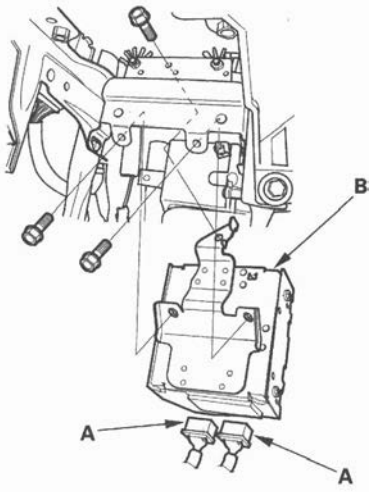

4. Remove the bolts and the stereo amplifier.
5. Install the stereo amplifier in the reverse order of removal.

XM Receiver Removal/Installation

1. Remove the right kick panel (see page 20-67).
2. Disconnect the connectors (A) from the XM receiver (B).

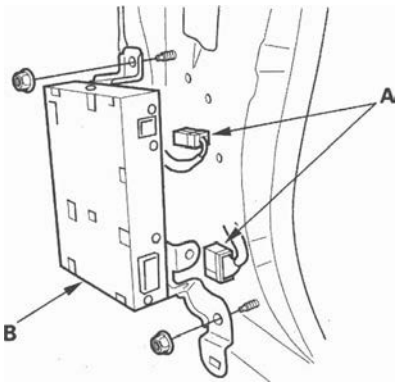

3. Remove the bolts and the XM receiver.
4. Install the XM receiver in the reverse order of removal.

   NOTE: When installing a new XM receiver, call XM lister care to update the customer's account.

Audio Disc Changer Removal/ Installation

1. Remove the center console (see page 20-89).
2. Disconnect the connector (A) from the audio disc changer (B).

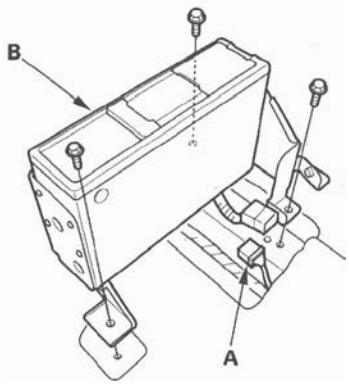

3. Remove the bolts and the audio disc changer.
4. Install the audio disc changer in the reverse order of removal.

Speaker Test/Replacement

Door Speaker

1. Remove the front door panel (see page 20-6).
2. Remove the screw. Then lift the speaker (A) straight up to release the lower clips (B).

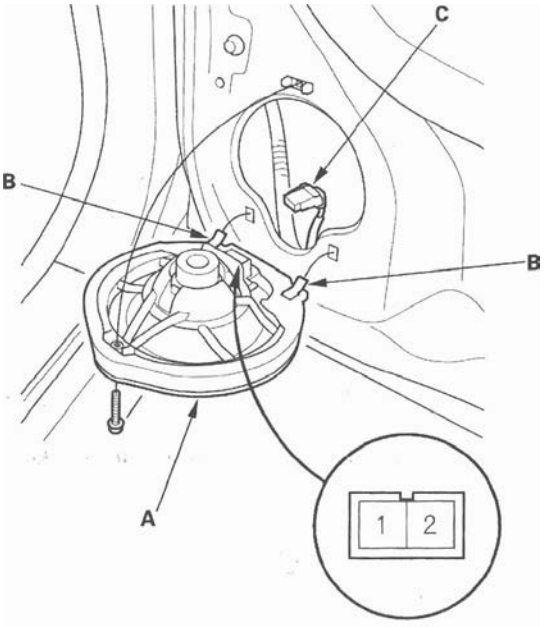

3. Disconnect the 2P connector (C), and remove the speaker.
4. Measure the resistance between the No. 1 and No. 2 terminals. There should be about 4 Ω.
5. If the resistance is not as specified, replace the door speaker.

(cont'd)

Speaker Test/Replacement (cont'd)

Tweeter

1. Carefully pry the tweeter grille (A) out of the dashboard. Be careful not to damage the tweeter grille and the dashboard.

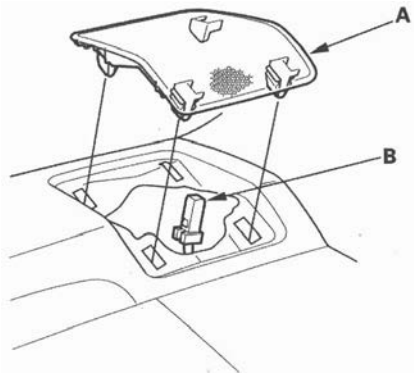

2. Disconnect the 2P connector (B) from the tweeter.
3. Remove the tweeter speaker from the speaker grille.

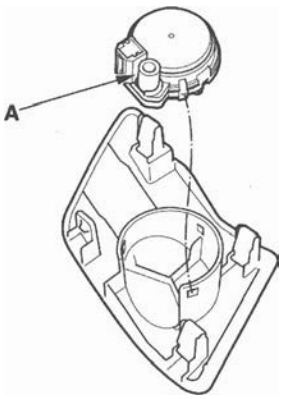

4. Check the capacitor (A) condition. If any malfunction (leakage) is found, replace the tweeter.
5. Measure the resistance between the tweeter (A) terminal No. 2 and the outside terminal of the capacitor. There should be about 4 Ω.

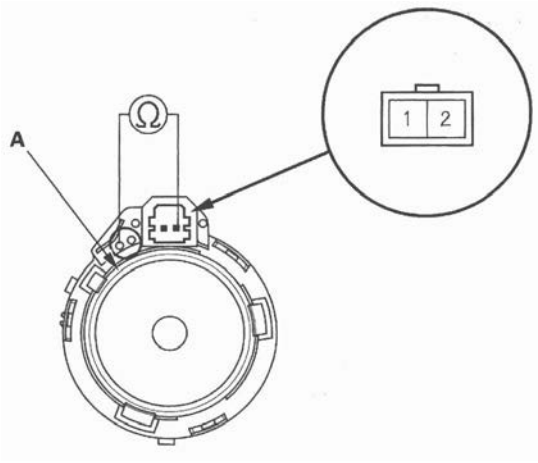

6. If the resistance is not as specified, replace the tweeter.

Subwoofer

1. Remove the front passenger's seat (see page 20-118).
2. Remove the four mounting bolts from the subwoofer (A).

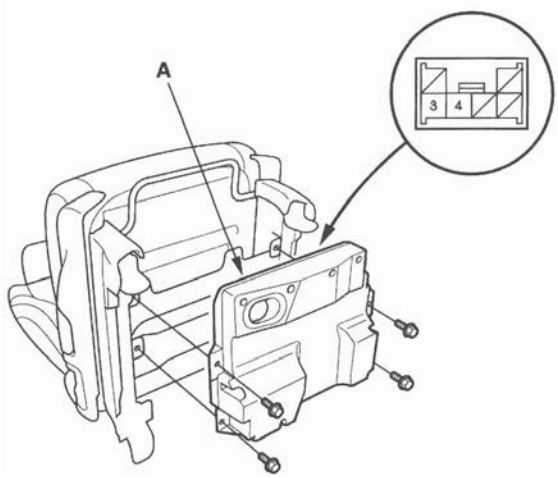

3. Measure the resistance between the No. 3 and No. 4 terminals. There should be about 2 Ω.
4. If the resistance is not as specified, replace the subwoofer.

Auxiliary Jack Assembly Replacement

1. EX model: Remove the screws and the center table AUX cover (A).

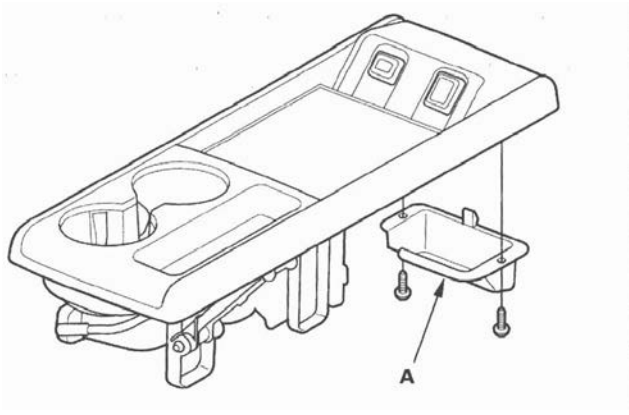

2. Carefully pull out the auxiliary jack assembly (A), then disconnect the 5P connector (B).

Except EX, LX models

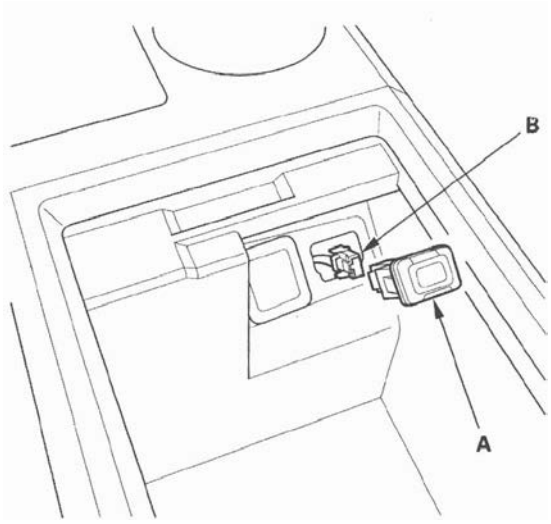

EX model

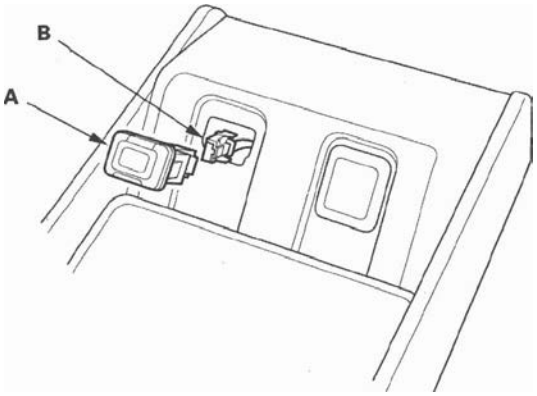

LX model

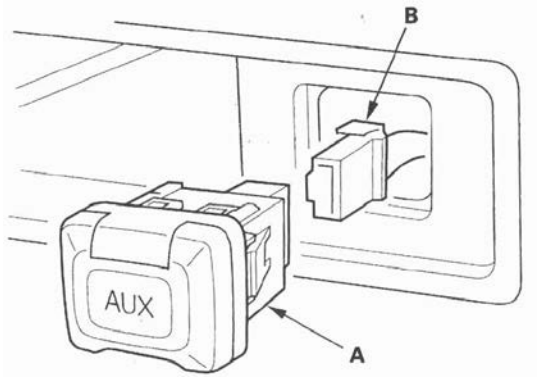

3. Install the reverse order of removal.

Audio Remote Switch Test

1. Remove the driver's airbag assembly (see page 24-161).
2. Remove the 12P connector (A) from the audio remote switch (B).

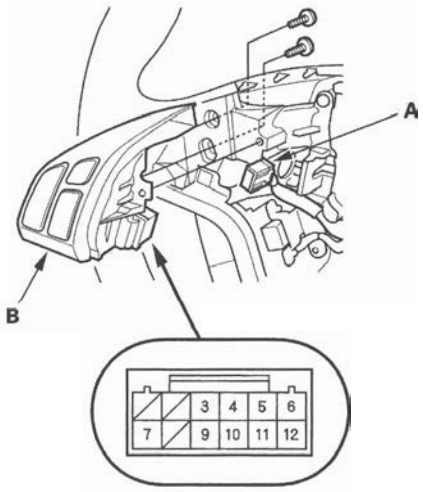

3. Measure the resistance between the No. 3 and No. 7 terminals in each switch position according to the table.

Position	Resistance
OFF	About 10 kΩ
MODE	About 4.0 kΩ
CH (+)	About 2.0 kΩ
CH (−)	About 780 Ω
▲ (VOL.UP)	About 370 Ω
▼ (VOL.DOWN)	About 100 Ω

4. If the resistance is not as specified, replace the audio remote switch.
5. Use a diode tester between the terminals in each switch position according to the table.

Terminal	4		6
	○	▷	○

6. If the diode test is bad, replace the switch.

Audio Remote Switch Replacement

1. Remove the steering wheel (see page 17-22).
2. Remove the audio remote switch (see page 17-23).
3. Install the audio remote switch in the reverse order of removal.

AM/FM/XM Antenna Replacement

NOTE: A loose AM/FM/XM antenna nut will affect radio sound quality.

1. Remove the headliner (see page 20-83).
2. Disconnect the lead connectors (A) from the AM/FM/XM antenna (B).

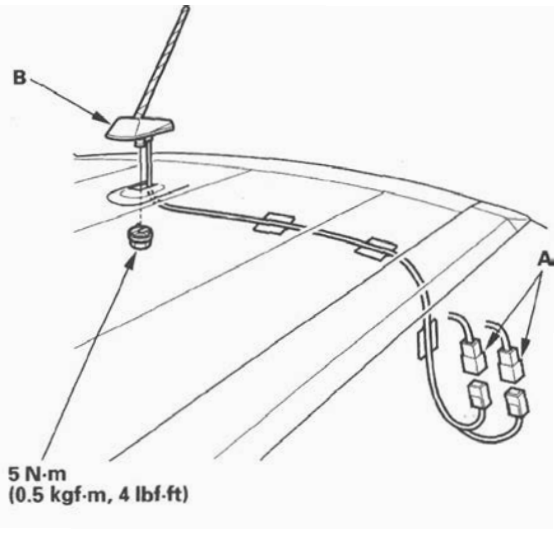

3. Remove the nut from the AM/FM/XM antenna.
4. Install the antenna in the reverse order of removal.

AM/FM Antenna Replacement

NOTE: A loose AM/FM antenna nut will affect radio sound quality.

1. Remove the headliner (see page 20-83).
2. Disconnect the lead connector (A) from the AM/FM antenna (B).

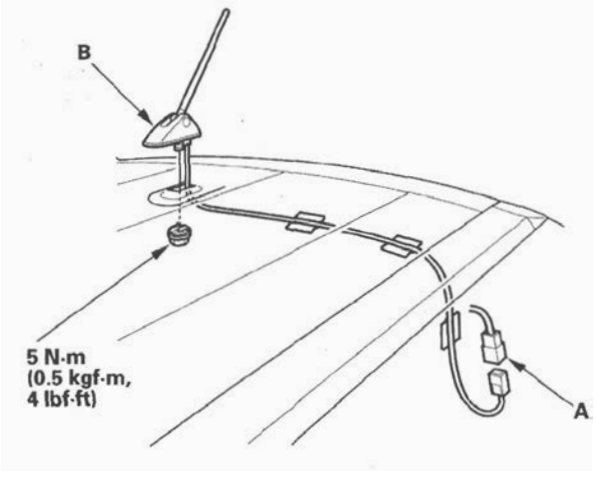

3. Remove the nut from the AM/FM antenna.
4. Install the antenna in the reverse order of removal.

Component Location Index

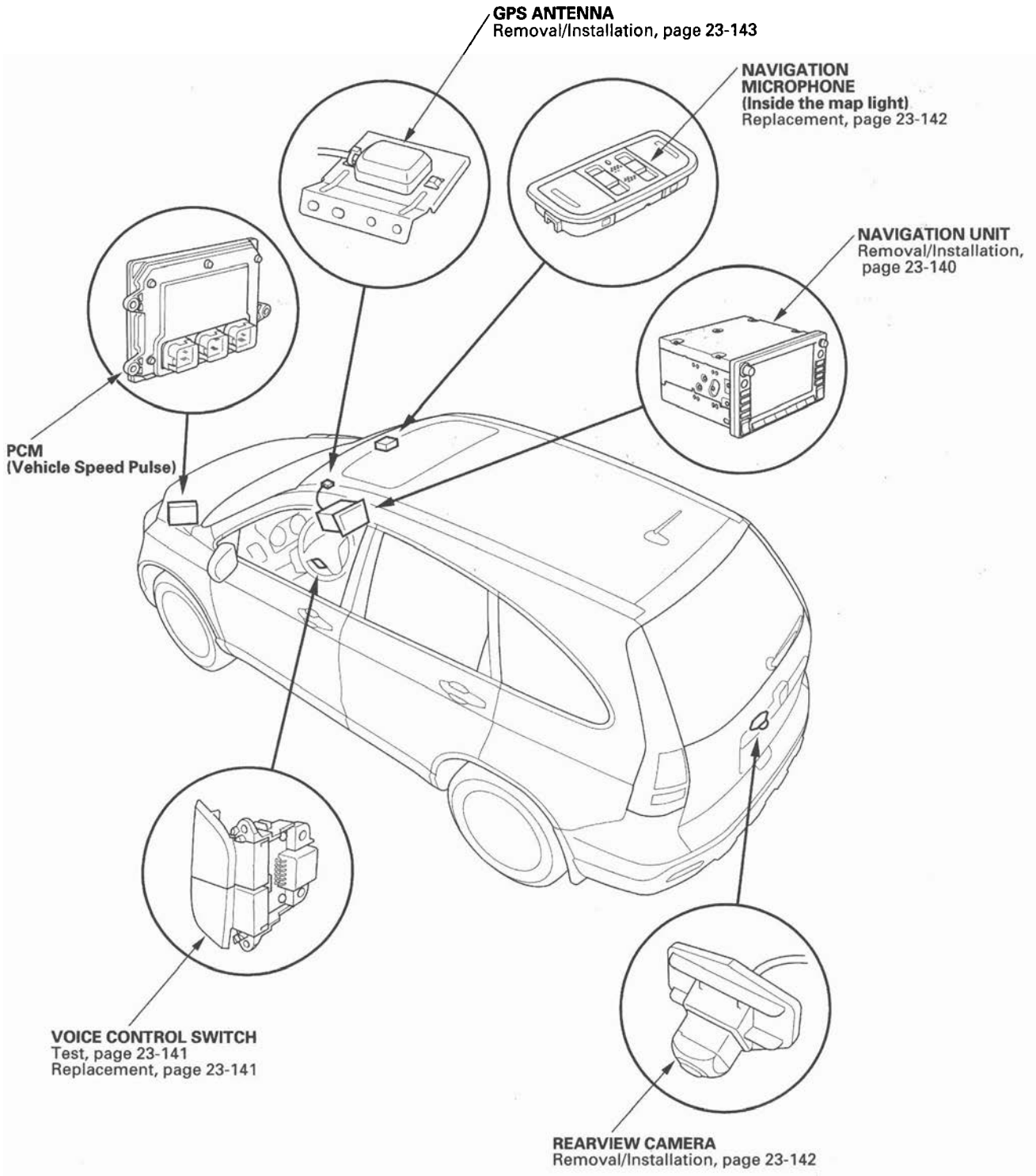

General Troubleshooting Information

General Operation

Refer to the navigation system manual, for the navigation system operating procedures.

Anti-theft Feature

The navigation system has a coded theft protection circuit. Make sure you have the customer's anti-theft security code before;

- Disconnecting the battery
- Disconnecting the navigation unit 12P and 17P connector
- Removing the No. 23 (10 A) fuse from the under-hood fuse/relay box

After service, reconnect power to the navigation unit, and turn the ignition switch ON (II). Enter the 4-digit anti-theft security codes, then select "Done".

When replacing the navigation unit, be sure to give the customer the new anti-theft security code.

Symptom Diagnosis

Certain circumstances and system limitations will result in occasional vehicle positioning errors. Some customers may think this indicates a problem with the navigation system when, in fact, the system is normal. Keep the following items in mind when interviewing customers about symptoms of the navigation system.

Self-Inertial Navigation Limitations

The limitations of the self-inertial portion of the navigation system (the yaw rate sensor and the vehicle speed signal) can cause some discrepancies between the vehicle's actual position and the indicated vehicle position (GPS vehicle position).

The following circumstances may cause vehicle positioning errors:

- Moving the vehicle with the engine stopped and the vehicle stopped, such as by ferry or tow truck, or if the vehicle is spun on a turn table.
- Tire slippage, changes in tire rolling diameters, and some driving situations may cause discrepancies in travel distances. Examples of this include:
  - Continuous tire slippage on a slippery surface.
  - Driving with snow chains mounted.
  - Abnormal tire pressure.
  - Incorrect tire size.
  - Frequent lane changes across a wide highway.
  - Continuous driving on a straight or gently curving highway.
- Tolerances in the system and map inaccuracies will sometimes limit how precisely the vehicle position is indicated. Examples of this include:
  - Driving on roads not shown on the map (map matching is not possible).
  - Driving on a road that winds in one direction, such as a loop bridge, an interchange, or a spiral parking garage.
  - Driving on a road with a series of sharp hair-pin turns.
  - Driving near a gradual highway exit or transition.
  - Driving on one of two close parallel roads.
  - Making many 90 degree turns.
  - The direction to destination icon or "Destination icon" shown or the map may be up to several hundred feet away from the actual location.

Global Positioning System (GPS) Limitations

The GPS cannot detect the vehicle's position during the following conditions:

- For the first 5 to 10 minutes after reconnecting the battery (This can take as long as 45 minutes).
- When the satellite signals are blocked by tall buildings, mountains, tunnels, large trees, or large trucks.
- When the GPS antenna is blocked by an object placed above it in the vehicle. The GPS antenna requires a clear unobstructed view of the sky.
- When the satellite signals are blocked by the operation of some electronic aftermarket accessories including, but not limited to non-OEM in-dash entertainment units (radio, CD players/changers, and Lo Jack), cell phones placed near navigation system and window tinting above the GPS antenna.

The accuracy of GPS is reduced during these instances:

- When only three satellite signals can be received (Four satellite signals are required for accurate positioning).
- When the satellite control centers are experiencing problems.
- When driving near high tension power lines.

(cont'd)

General Troubleshooting Information (cont'd)

Muting Logic

Whenever the navigation system is giving guidance, the front speakers are muted. When the voice control system is being used, all of the speakers are muted.

LCD Unit Limitations

- In cold temperatures, the display may stay dark for the first 2 or 3 minutes until it warms up.
- When the display is too hot because of direct summer sunlight, it will remain dark until the temperature drops.
- When the humidity is high and the interior temperature is low, the display may appear cloudy. The display will clear up after some use.
- Fingerprints on the touch panel may sometimes be noticeable because of the panel's low-reflection coating. Clean the screen with a soft damp cloth. You may use a mild cleaner intended for eye glasses or computer screens. To avoid scratching the panel, do not rub too hard, or use abrasive cleaners or shop towels.
- The touch panel uses a resistive membrane, that is unaffected by sunlight. If a touch switch does not function immediately, shift your finger slightly, and touch it again.

Symptom Duplication

- If you can duplicate the symptom, compare it to a known-good vehicle. Only use a vehicle of the same model, same year, same trim, and same software version. If you can duplicate the symptom in the known-good vehicle, then it is a characteristic of the system.
- When the symptom can be duplicated, follow the self-diagnostic procedures and the appropriate troubleshooting procedures.
- When the symptom does not reappear, or only reappears intermittently, ask the customer about the conditions when the symptom occured.
  - Try to establish if outside interference may be the cause.
  - Try to duplicate the symptom under the same conditions the customer experienced.
  - Vibration, temperature extremes, and moisture (dew, humidity) are factors that are difficult to duplicate.
  - Inspect the vehicle for aftermarket electronic devices (vehicle locators, radar detector amps, etc.) that may be hidden.

Service Precautions

- Check for service bulletins or Service News articles that may relate to the customer's concern.
- The navigation unit is located in the dashboard.
- When the battery is disconnected, the internal GPS clock is reset to "0:00." The clock will reset to the correct time after the system finishes the GPS initialization.
- After reconnecting the battery, you have to wait to get the initial signal from the satellite. It will take from 10 to 45 minutes.
- Before returning the vehicle to the customer, enter the navigation system anti-theft security code, then set the clock.

System Initialization

If for any reason, you lose power to the navigation system (like the battery was disconnected), the navigation system will require initialization. Once completed, your system will be ready to use.

This initialization requires the following:
- Entering the 4-digit anti-theft security code to "unlock" the system
- GPS initialization (may not be needed depending on the length of time the system was without power)
- Map matching to align the GPS to a location on the map

Entering Security Code

The navigation system has a coded theft protection circuit. Make sure you have the customer's anti-theft security codes number before;
- Disconnecting the battery
- Disconnecting the navigation unit 17P connector
- Removing the No. 23 (10 A) fuse from the under-hood fuse/relay box

After service, reconnect power to the navigation unit, and turn the ignition switch ON (II). Enter the 4-digit anti-theft security code, then select "Done."
When replacing the navigation unit or audio unit, be sure to give the customer the new anti-theft security code.

GPS initialization

Depending on the length of time the battery or the navigation unit was disconnected, your system may require GPS initialization. If it does, the following screen appears:

*****Wait*****
The system is acquiring its GPS signal. This could take up to 10 minutes.
• Engine must be running
• Vehicle must be parked outside, away from buildings
• Do not move the vehicle at this time

If this procedure is not necessary the system proceeds directly to the Disclaimer screen. During initialization, the system searches for all available GPS satellites, and obtains their orbital information. During this procedure the vehicle should be out in the open with a clear view of the sky.

If the navigation system finds the satellites properly, this box clears, and changes to the Disclaimer screen. If within 10 minutes the system fails to locate a sufficient number of satellites to locate your position, the following screen appears.

Navigation system is unable acquire a proper GPS signal.
• Move vehicle to another location
• Turn the ignition switch off
• Disconnect the battery for 30 minutes to clear the GPS receiver's memory
• Reconnect the battery and follow the screen prompts

After 30 minutes with this screen displayed, turn off the engine, then restart the vehicle. If you now see the Disclaimer screen, the GPS initialization is complete.

NOTE:
- The average acquiring time is less than 10 minutes, but it can take as long as 45 minutes.
- If the system is still unable to acquire a signal, follow the instructions on the screen. If this screen appears again, go to troubleshooting for the GPS icon is white or not shown (see page 23-112).
- To bypass the GPS acquire screens, press and hold the "Menu", and "Zoom out" keys at the same time. Touch the "Return" button on the screen to exit the diagnostic mode. This allows you to continue troubleshooting while in the shop.

After Servicing Procedures-Map Matching

- Park the vehicle in an area where the GPS satellite signals will be unobstructed, and check the satellite mark on the display.
- Drive the vehicle 1 mile before entering a destination and confirm the road being used is displayed at the bottom of the screen (map matched).
- Enter the dealer address and confirm the system routes and performs normally.
- Clear any previous destinations and address entries that may have been entered for testing purposes.

Obtaining A Navigation DVD

If the navigation DVD is lost or damaged, or you need a yearly updated DVD, you have two ways to purchase one. You can either call (888) 291-4675, or order on-line at www.honda.com "ORDER NAVIGATION DVD" link.

Both methods require a credit card. The DVD for this model has an turquoise (blue/green) label, and cannot be ordered through the parts system. The following DVDs will not work in this navigation system:

- Earlier model or different model navigation DVDs (black, orange, or white label)
- Map software programs manufactured by other companies
- DVD movies, or DVDs containing audio recordings
- Copies of an original Navigation DVD

Update DVDs are available for purchase usually in the fall of each year. They may contain the following:

- Enhanced maps and points of interest (POI) coverage
- Fixes for minor software bugs
- Additional features

NOTE: Updating is optional, and there is no program to provide free DVDs containing yearly mapping updates.

Symptom Troubleshooting Index

Symptom	Diagnostic procedure	Also check for
No picture is displayed	Symptom Troubleshooting (see page 23-109)	• Navigation unit • Open/short between the navigation unit, or the XM receiver or the GA-Net bus • Harness/fuses/switches
Picture is missing a color or tone or is an odd color	Symptom Troubleshooting (see page 23-110)	• Navigation unit • Harness/fuses/switches
Picture has lines/rolls/other issues or is an odd color	Symptom Troubleshooting (see page 23-111)	• Navigation unit • Harness/fuses/switches
Navigation display buttons do not work or respond properly	Symptom Troubleshooting (see page 23-112)	• Navigation unit • Open/short between the XM receiver or the GA-Net bus • Harness/fuses/switches
GPS icon is white or not shown	Symptom Troubleshooting (see page 23-112)	• Navigation unit • GPS antenna/cable • Harness/fuses/switches
Voice guidance cannot be heard, is broken up, or there is too much static	Symptom Troubleshooting (see page 23-113)	• Navigation unit • Harness/fuses/switches
Voice recognition does not work	Symptom Troubleshooting (see page 23-113)	• Navigation unit • Navigation microphone/ steering buttons • Harness/fuses/switches
Vehicle position icon constantly leaves road, moves erratically, or is very far from actual position	Symptom Troubleshooting (see page 23-114)	• Navigation unit • GPS antenna/cable • PCM (speed and fuel pulses) • Harness/fuses/switches
DVD screen error messages	Symptom Troubleshooting (see page 23-115)	• Navigation unit • DVD
System always comes up in in-line diagnostic mode	Symptom Troubleshooting (see page 23-115)	Software remedy, do not replace hardware
Display day/night mode does not work	Symptom Troubleshooting (see page 23-116)	• Navigation unit • Gauge assembly (CAN) • Harness/fuses/switches
System locks up or freezes constantly	Symptom Troubleshooting (see page 23-116)	• Navigation unit • Harness/fuses/switches • DVD
Vehicle icon wanders across the map when driving (does not follow a displayed road) or map or vehicle ICON spins	Symptom Troubleshooting (see page 23-117)	Navigation unit (Yaw sensor)

Symptom	Diagnostic procedure	Also check for
Vehicle icon moves by itself when parked	Symptom Troubleshooting (see page 23-117)	Navigation unit
Navigation stays on with ignition switch off	Symptom Troubleshooting (see page 23-118)	• Harness/fuses/switches • Aftermarket accessory or cell phone installed
Navigation cannot control audio/ disc	Symptom Troubleshooting (see page 23-118)	• Navigation unit • Open/short between the Navigation unit, or the XM receiver or the GA-Net bus
Navigation cannot control XM radio	Symptom Troubleshooting (see page 23-119)	• Navigation unit • Open/short between the Navigation unit, or the XM receiver or the GA-Net bus • Harness
Navigation frequently asks for anti-theft code and needs GPS initialization	Symptom Troubleshooting (see page 23-119)	• Navigation unit • Harness/fuses/switches/ unit grounds
OPEN/CLOSE function of the display does not work	Symptom Troubleshooting (see page 23-120)	• Navigation unit • Harness
Navigation display will not close	Symptom Troubleshooting (see page 23-121)	• Navigation unit • Harness
Navigation display does not open or opens part way	Symptom Troubleshooting (see page 23-121)	• Navigation unit • Harness
PC card will not play/card icon on audio screen cannot be selected (with navigation)	Symptom Troubleshooting (see page 23-62)	Navigation unit
The vehicle icon lags behind when the vehicle turns	See self-intertial navigation limitation (see page 23-85)	• Aftermarket accessories connected to the system • GPS antenna/cable
Navigation screen is darker than normal or takes time to start up when it is cold	See LCD display unit limitations (see page 23-86)	
A new navigation DVD is needed	See obtaining a navigation DVD (see page 23-87)	

Navigation System

System Description

Overview

The navigation system is a highly sophisticated, hybrid locating system.

The navigation unit uses global positioning system (GPS) satellite signals, internal yaw and vehicle speed inputs, and a map database to show you where you are and to help guide you to a desired destination.

The navigation unit's GPS receiver receives signals from the GPS, a network of 24 satellites in orbit around the earth. By receiving signals from several of these satellites, the navigation system can determine the latitude, longitude, and elevation of the vehicle.

Signals from the system's yaw rate sensor (inside the navigation unit) detects turns, and the PCM vehicle speed pulse (VSP) and reverse signal enable the system to keep track of the vehicle's speed and direction of travel. The advantage of this hybrid system is that the system can track your position if either the GPS signal or the vehicle speed signal is missing. For instance, when in a tunnel (no GPS), the speed signal is used to update your position on the map. Alternately, while the vehicle is being transported on a ferry, GPS signals can show the vehicle position on the map as it crosses the water.

The navigation system uses the location, direction, and speed information to display the appropriate map and calculate a route to the destination entered. As you drive to a destination, the system provides both visual and audio guidance. Audio guidance is sent to the audio unit, and an RGB graphics color signal is sent to the navigation display.

This navigation system also has voice recognition that allows voice control of most of the navigation, audio, and climate control functions. The voice control switches (TALK and BACK buttons on the steering wheel) activate the voice control system. The microphone on the ceiling receives your voice commands. For more information on this feature, consult the navigation system manual.

The illumination signal is used by the navigation unit to automatically switch the display mode between the "Night" and "Day" display modes. When the headlights are on, the dash brightness control setting "full brightness" overrides the "Night" display mode, and allows a daytime navigation display with the lights on.

When the navigation system is giving voice guidance commands, the front speakers are muted. When the voice control system is used (TALK button pressed), all of the speakers are muted.

The internal GA-Net II bus passes information back and forth between the navigation display, the navigation unit, and the audio system components. The information passed on this bus are touch button commands, audio muting signal, audio (radio and XM), and any open in these bus lines can affect the navigation system or other audio accessory operation.

The clock on the navigation display is set and maintained by the navigation unit. The time is automatically adjusted for daylight savings, and time zone changes while driving. The time can be adjusted in setup.

Additional information is available about the navigation components following the System Diagram. A glossary of terms that are used throughout this section follows the detailed information.

The navigation system manual in the glove box covers all of the system functions and settings. Use this as a resource when evaluating a customer concern.

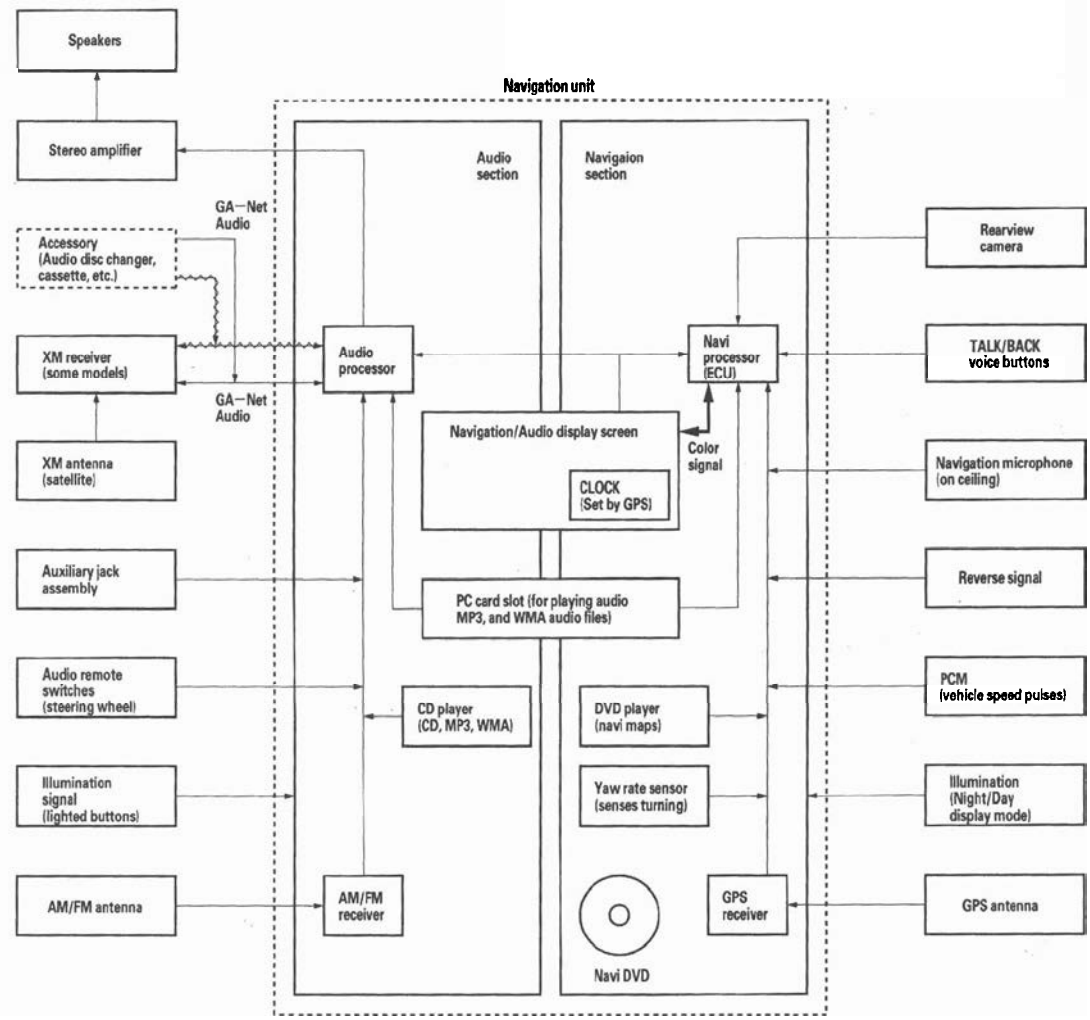
Speakers
Navigation unit
Stereo amplifier
Audio section
Navigaion section
GA—Net Audio
Accessory (Audio disc changer, cassette, etc.)
Rearview camera
XM receiver (some models)
Audio processor
Navi processor (ECU)
TALK/BACK voice buttons
GA—Net Audio
Navigation/Audio display screen
Color signal
CLOCK (Set by GPS)
XM antenna (satellite)
Navigation microphone (on ceiling)
Auxiliary jack assembly
PC card slot (for playing audio MP3, and WMA audio files)
Reverse signal
Audio remote switches (steering wheel)
CD player (CD, MP3, WMA)
DVD player (navi maps)
PCM (vehicle speed pulses)
Illumination signal (lighted buttons)
Yaw rate sensor (senses turning)
Illumination (Night/Day display mode)
AM/FM antenna
AM/FM receiver
GPS receiver
GPS antenna
Navi DVD

(cont'd)

System Description (cont'd)

Navigation Function

The navigation system is composed of the navigation unit, the PCM (vehicle speed signal), the GPS antenna, microphone, voice control switch, XM receiver, and the climate control unit.
These units communicate with each other on the GA-Net bus.

Function Diagram

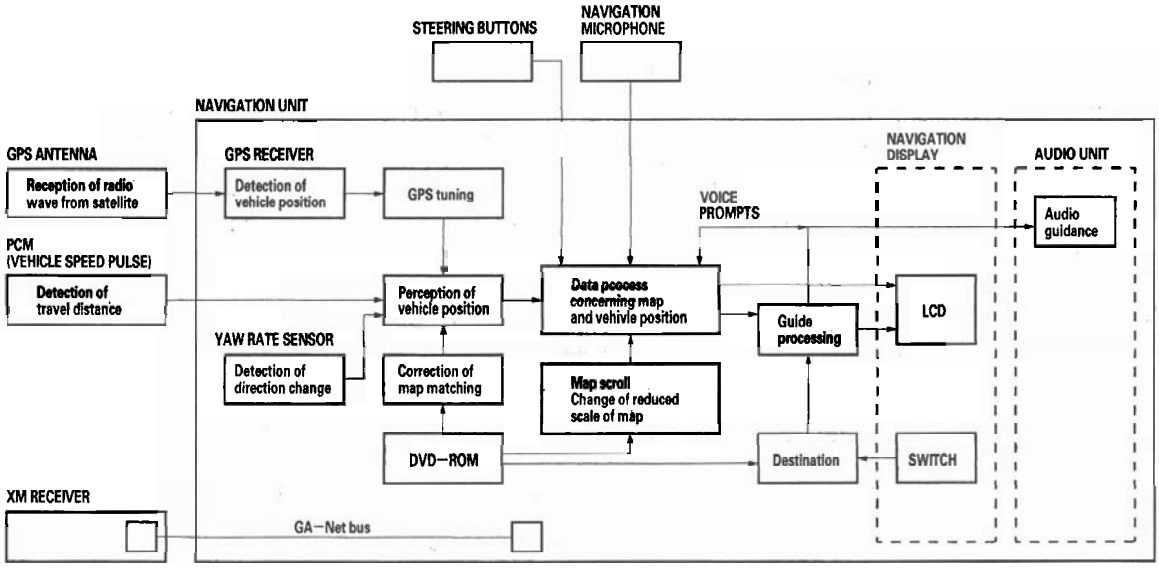

Vehicle Speed Pulse

The vehicle speed pulse is sent by the PCM. The PCM receives a signal from the countershaft speed sensor, then it processes the signal and transmits it to the speedometer and other systems.

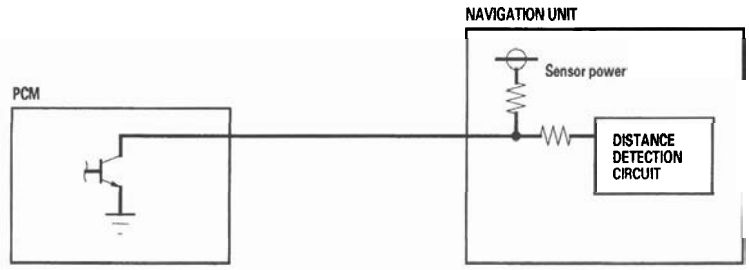

GA-Net Bus Configuration

The GA-Net bus passes audio and navigation commands throughout the navigation and audio components. These commands include audio/XM selections by voice, and XM station and music title names. Because the entire bus is daisy-chained between components (see diagram), any open or short in the GA-Net bus harness will cause any or all of these functions to become inoperative. The addition of any factory audio accessory must maintain the continuity of the GA-Net bus by installing the "Y" cable included with the accessory kit.

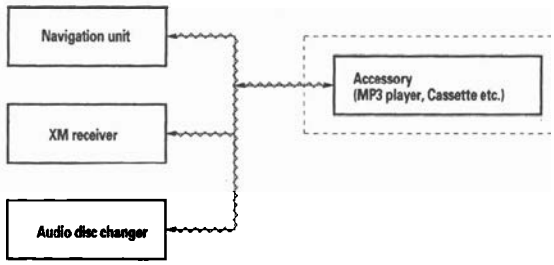

(cont'd)

System Description (cont'd)

Yaw Rate Sensor
The yaw rate sensor (located in the navigation unit) detects the direction change (angular speed) of the vehicle. The sensor is an oscillation gyro built into the navigation unit.

Sensor Element Structure
The sensor element is shaped like a tuning fork, and it consists of the piezoelectric parts, the metal block, and the support pin. There are four piezoelectric parts: one to drive the oscillators, one to monitor and maintain the oscillation at a regular frequency, and two to detect angular velocity. The two oscillators, which have a 90-degree twist in the center, are connected at the bottom by the metal block and supported by the support pin. A detection piezoelectric part is attached to the top of each oscillator. The driving piezoelectric part is attached to the bottom of one oscillator, and the monitoring piezoelectric part is attached to the bottom of the other oscillator.

Oscillation Gyro Principles
The piezoelectric parts have "electric/mechanical transfer characteristics." They bend vertically when voltage is applied to both sides of the parts, and voltage is generated between both sides of the piezoelectric parts when they are bent by an external force. The oscillation gyro functions by utilizing this characteristic of the piezoelectric parts and "Coriolis force." (Coriolis force deflects moving objects as a result of the earth's rotation.) In the oscillation gyro, this force moves the sensor element when angular velocity is applied.

Operation
1. The driving piezoelectric part oscillates the oscillator by repeatedly bending and returning when an AC voltage of 6 kHz is applied to the part, The monitoring-side oscillator resonates because it is connected to the driving-side oscillator by the metal block.
2. The monitoring piezoelectric part bends in proportion to the oscillation and outputs voltage (the monitor signal). The navigation unit control circuit controls the drive signal to stabilize the monitor signal.
3. When the vehicle is stopped, the detecting piezoelectric parts oscillate right and left with the oscillators, but no signal is output because the parts are not bent (no angular force).
4. When the vehicle turns to the right, the sensor element moves in a circular motion with the right oscillator bending forward and the left oscillator bending rearward. The amount of forward/rearward bend varies according to the angular velocity of the vehicle.
5. The detecting piezoelectric parts output voltage (the yaw rate signal) according to the amount of bend. The amount of vehicle direction change is determined by measuring this voltage.

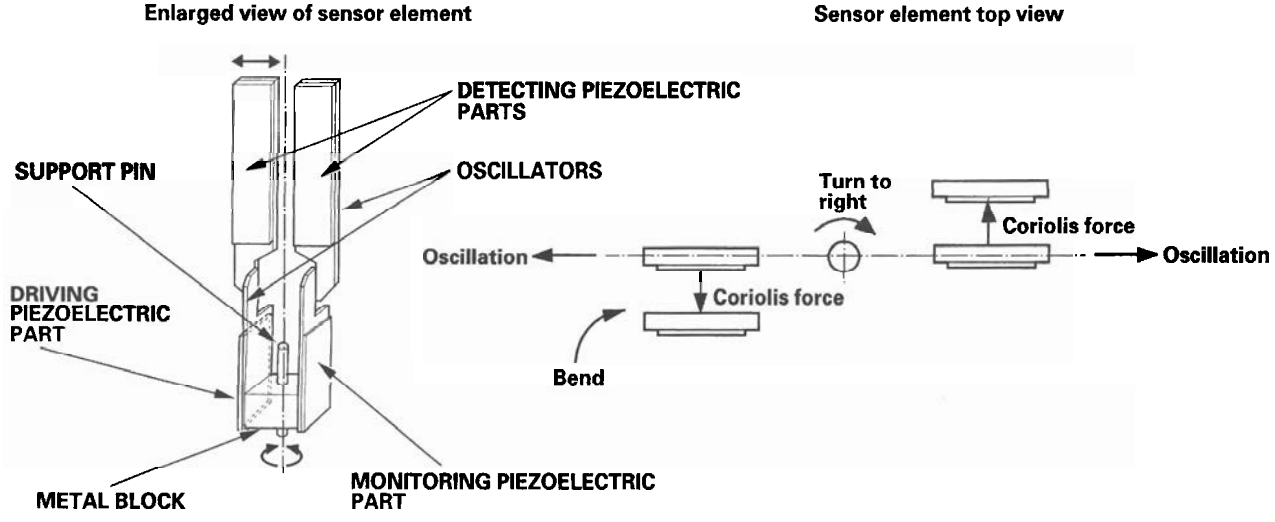

Global Positioning System (GPS)
The global positioning system (GPS) enables the navigation system to determine the current position of the vehicle by using the signals transmitted from the satellites in orbit around the earth. The satellites transmit the satellite identification signal, orbit information, transmission time signal, and other information. When the GPS receiver receives a signal from four or more satellites simultaneously, it calculates the current position of the vehicle based on the distance to each satellite and the satellite's positions in its respective orbit.

Position detection Image with GPS satellite

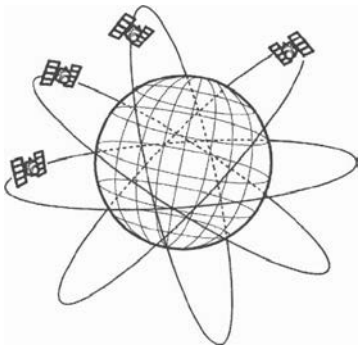

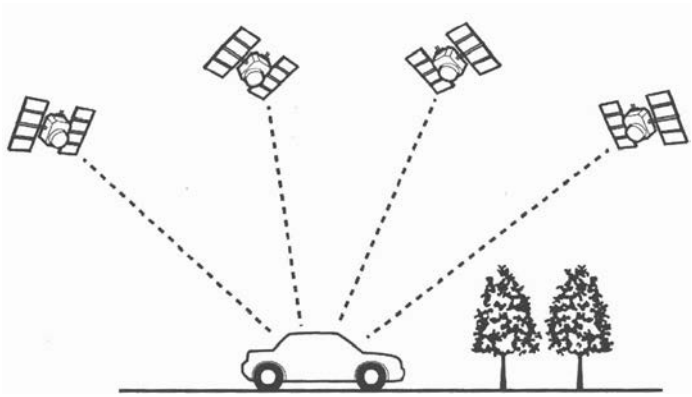

Precision of GPS
The precision of the GPS varies according to the number of satellites from which signals are received and the view of the sky. The precision is indicated by the color and shape of the GPS icon shown on the display.

GPS ICON	NUMBER OF SATELLITES	CONDITION	DESCRIPTION
No GPS icon shown	2 or less	Impossible to detect vehicle position	GPS function is normal. The satellite signals received by the GPS are too few to detect the vehicle position.
Square GPS icon shown with white "GPS"	3	Vehicle position detectable in 2 dimensions	The longitude and latitude of the vehicle position can be detected. (Less precise than detection in three dimensions)
Cube GPS icon shown with green "GPS"	4 or more	Vehicle position detectable in 3 dimensions	The longitude, latitude and the altitude of the vehicle position can be detected. (More precise than detection in two dimensions)

GPS Antenna
The GPS antenna amplifies and transmits the signals received from the satellites to the GPS receiver.

GPS Receiver
The GPS receiver is built into the navigation unit. It calculates the vehicle position by receiving the signal from the GPS antenna. The vehicle position and signal reception condition is transmitted from the GPS receiver to the navigation control unit to adjust vehicle position.

(cont'd)

System Description (cont'd)

Navigation Unit
The navigation unit calculates the vehicle position and guides you to the destination. The unit performs map matching correction, GPS correction, and distance tuning. It also controls the menu functions and the DVD-ROM drive, and interprets voice commands. With control of all these items, the navigation unit makes the navigation picture signal, then it transmits the signal to the navigation display and audio driving instructions to the audio unit.

Calculation of Vehicle Position
The navigation unit calculates the vehicle position (the driving direction and the current position) by receiving the directional change signals from the yaw rate sensor and the travel distance signals from the PCMs vehicle speed pulse (VSP) signal.

Map Matching Tuning
The map matching tuning is accomplished by indicating the vehicle position on the roads on the map. The map data transmitted from the DVD-ROM is checked against the vehicle position data, and the vehicle position is indicated on the nearest road. Map matching tuning does not occur when the vehicle travels on a road not shown on the map, or when the vehicle position is far away from a road on the map.

GPS Tuning
The GPS tuning is accomplished by indicating the vehicle position as the GPS's vehicle position. The navigation unit compares its calculated vehicle position data with the GPS vehicle position data. If there is large difference between the two, the indicated vehicle position is adjusted to the GPS vehicle position.

Distance Tuning
The distance tuning reduces the difference between the travel distance signal from the VSP and the distance data on the map. The navigation unit compares its calculated vehicle position data with the GPS vehicle position data. The navigation unit then decreases the tuning value when the vehicle position is always ahead of the GPS vehicle position, and it increases the tuning value when the vehicle position is always behind the GPS vehicle position.

Route Guidance
The navigation unit can calculate different routes to a selected destination. You have five options:
- Direct Route — Calculate a route that is the most direct.
- Easy Route — Calculate a route that minimizes the number of turns needed.
- Minimize Freeways — Calculate a route that avoids freeway travel. If that is not possible, keep the amount of freeway travel to a minimum.
- Minimize Toll Roads — Calculate a route that avoids, or minimizes travel on toll roads.
- Maximize Freeways — Calculate a route that uses freeways as much as possible.

Audio Guidance
The navigation unit transmits audio driving instructions before entering an intersection or passing a junction. The audio instructions come through the audio unit to the front speakers.

NOTE: The front speakers are muted whenever the navigation system is giving guidance commands, and all of the speakers are muted when the voice control system is being used.

DVD-ROM
The map data (including all scale rates) is stored in the DVD-ROM. The map data includes:
- Road distances, road widths, speed limits, traffic regulations, passing time at junction, distances to junctions, and the driving instructions for audio guidance.
- Latitude and longitude GPS.

Audio Unit (Built in the navigation unit)
The audio unit receives the audio driving instructions from the navigation unit, and transmits the instructions through the front speakers even when the audio system is in use.

Navigation Display
The navigation display uses a liquid crystal display (LCD). The LCD is a 6.5-inch-diagonal, thin film transistor (TFT), stripe type with 65,536 color, The color film and fluorescent light are laid out on the back of the liquid crystal film. The touch sensor on the front of the LCD consists of a touch sensitive resistive membrane with an infinite number of possible touch locations.

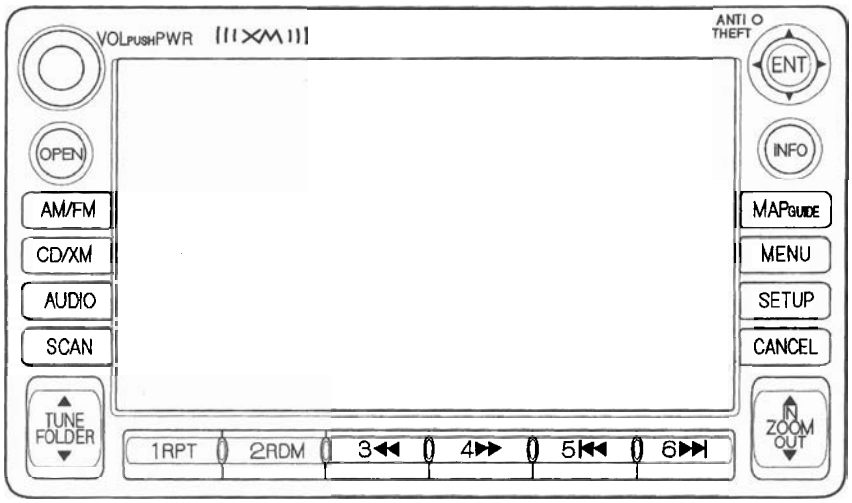

Microphone
The microphone (on the ceiling, near the front map light) receives voice commands and transmits them to the navigation unit for interpretation.

TALK Button
Activates the voice control system in the navigation unit to accept voice commands.

BACK Button
Returns the display to the previous screen (similar function as the CANCEL button).

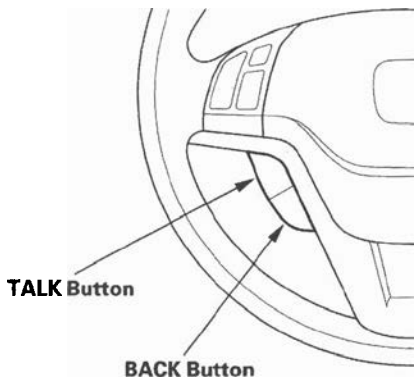

(cont'd)

System Description (cont'd)

Glossary
The following is a glossary of terms pertaining to the Voice Recognition Navigation System.

Item	Definition
Breadcrumbs	Off road tracking dots that can be followed on the map to retrace your route back to a mapped (digitized) road. This function can be turned on/off in Setup screen 1.
CPU	Central Processing Unit. The main device within the navigation unit that coordinates the rest of the electronic functions.
Database	This consists of the Map data, and the POI (Points Of Interest) data stored on the DVD.
DBW	Drive By Wire. Allows electrical control of the throttle without the need of a mechanical linkage.
DCA	Detailed coverage area, an area that is covered in the database digital mapping. For example, the 48 continuous United States are within the DCA. Hawaii and Alaska are outside of the DCA.
DTC	Diagnostic Trouble Codes. Use the HDS tablet to obtain, and troubleshoot the cause of these codes.
Dead Reckoning	The use of the speed signal, and yaw rate sensor to position the vehicle on the map even when tall buildings, or driving in a tunnel obscures the GPS signal.
Digitized Road	A road that appears on the navigation screen. The road name will appear at the bottom of the navigation screen. If the user drives "off road", the navigation system will display "Not on a digitized road". The "breadcrumbs" will appear after driving for 1/2 mile.
Disclaimer Screen	Screen containing cautionary information. It is meant to be read carefully and acknowledged by the customer when using the navigation system.
DVD or DVD-ROM	Digital Versatile Disk. The navigation program and database resides on this disk. See the navigation system manual for information on how to order a replacement or an update DVD.
ECM	Engine Control Module. Typically referred to as the ECM.
FAQ	Frequently Asked Question. See the navigation system manual for a list of the customer FAQs, and troubleshooting information.
GA-Net bus	Units communication line.
GPS	Global Positioning System. A network of 24 satellites in orbit around the earth. The navigation system can simultaneously receive signals from up to 12 satellites to accurately position the vehicle on the map.
HDS	Honda Diagnostic System. A hand held tablet PC used for in diagnosing vehicle problems.
H/U	Head Unit. The navigation system display unit assembly in the dash.
Initialization	This refers to the period needed to re-acquire the GPS satellite orbital information whenever the navigation system power has been disconnected. This can take from 10 to 45 minutes.
LCD	Liquid Crystal Display (the navigation screen)
Map Matching	The received GPS information allows the navigation system to position the vehicle on the map. Map matching has occurred if the map screen is displaying the current street name in the bottom-shaded area.
Mic	Abbreviation for the microphone used for receiving voice commands. It is located near the map light in the ceiling.
MW	Maneuver Window. While on-route to a destination, this window displays information about the next maneuver.
Navi	Abbreviation for the Navigation System
Off Route	This occurs when the user leaves mapped roads. Off road tracking dots ("breadcrumbs") are displayed if the option is enabled in Setup. The user can use them to return to a mapped road. The bottom of the navigation screen will say "Not on a digitized road". Breadcrumbs will appear after driving for 1/2 mile.

Item	Definition
Outlying Areas	These are rural areas that typically have only their main roads mapped. All other roads are shown in light brown for reference only, since they have not been verified.
PC Card Slot	The PC card (PCMCIA, type II) slot is for playing MP3 and WMA audio files.
PCM	Powertrain Control Module. This unit supplies the navigation system speed signal.
PCMCIA	A computer industry defined term referring to the PC card slot standard.
PIN	Personal Identification Number. A random 4 digit number created by the customer to protect personal information.
POI	Point Of Interest. These are the businesses, schools etc. found under the "places" option on the main menu.
Polygon	Colored areas on the map screen denoting parks, schools etc. See the navigation system manual "Traveling to Your Destination" for a list of the assigned colors.
QWERTY	Keyboard layout resembling the typewriter keys. The keyboard layout can be changed to an alphabetical layout in the Setup mode.
Security Code	Code needed to activate the navigation system. You can obtain the security code from the "iN" by entering the navigation system control serial number. You can find the serial number on the diagnostic screens (Unit Check, Navi ECU), or on the underside of the control unit.
Touch Screen Buttons or Touch Sensor	The display panel has 2 layers of clear film on the screen panel. If you touch the screen panel, the films engage and the navigation display detects the touch point.
Tuning	A continual update of internal navigation system scaling factors. See the individual sensor tuning discussions under either "System Description", or "System Diagnostic Mode" (see page 23-122) in this manual.
Unverified Streets	These streets have not been verified for turn restrictions, one-way, etc. They are shown in light brown on the map. You can enter address destinations in these areas, but depending on your "Unverified Routing" choice in setup, voice guidance may end at the last verified street closest to your destination.
Verified Streets	These streets consist of the detailed metropolitan coverage areas, and all other inter-town connection roads. These roads are shown in black on the map.
VP	Vehicle Position. When in map mode, this circular icon shows the vehicle position on the map. Touch this icon to show the latitude, longitude, and elevation of your current position.
VR	Voice Recognition. This allows voice control of many of the navigation functions. The hardware consists of the microphone, steering wheel (TALK/BACK) buttons, and the front speakers. See the overview for more information.
VSP	Vehicle Speed Pulse. This pulse signal coming from the PCM is used to update the Vehicle position on the map. These pulses do not indicate direction (forward or backward). When in reverse, the navigation receives a signal from the MICU and directs the VP to move backwards on the map.
VSS	Vehicle Speed Sensor. The counter shaft speed sensor reads the output shaft speed at the transmission and provides a speed pulse to the PCM. The PCM sends this pulse to the navigation system.
XM Satellite Radio	A satellite band radio system where signals are received from either a satellite or land based transmitters.
Yaw Sensor	This device is located in the navigation system control unit and senses the side-to-side twisting force generated when the vehicle turns. See a detailed description of how this sensor works in this manual.

(cont'd)

System Description (cont'd)

Diagnostic System Diagram
This diagram below shows an overview of the navigation diagnostic features starting at the center and working outward in layers. The diagram starts with "Key On." Next the diagram shows two ways to get the diagnostic main menu:

- By starting the vehicle with the SCS connector plugged in, you will enter the diagnostic "System Links" screen. Touch "Return" to get the main diagnostic menu.
- From any of the navigation Map or Menu screens, press and simultaneously hold the keys Menu Map Cancel.

Finally, the diagram shows the available diagnostic menu choices, starting at the bottom left, and moving clockwise. In most cases, do not clear or change settings in any diagnostic screen unless instructed to do so in the explanation, or by the factory. If the factory asks you to insert a PCMCIA memory card into the "PC Slot," then the features specified on the diagram as "(Card)" are available.

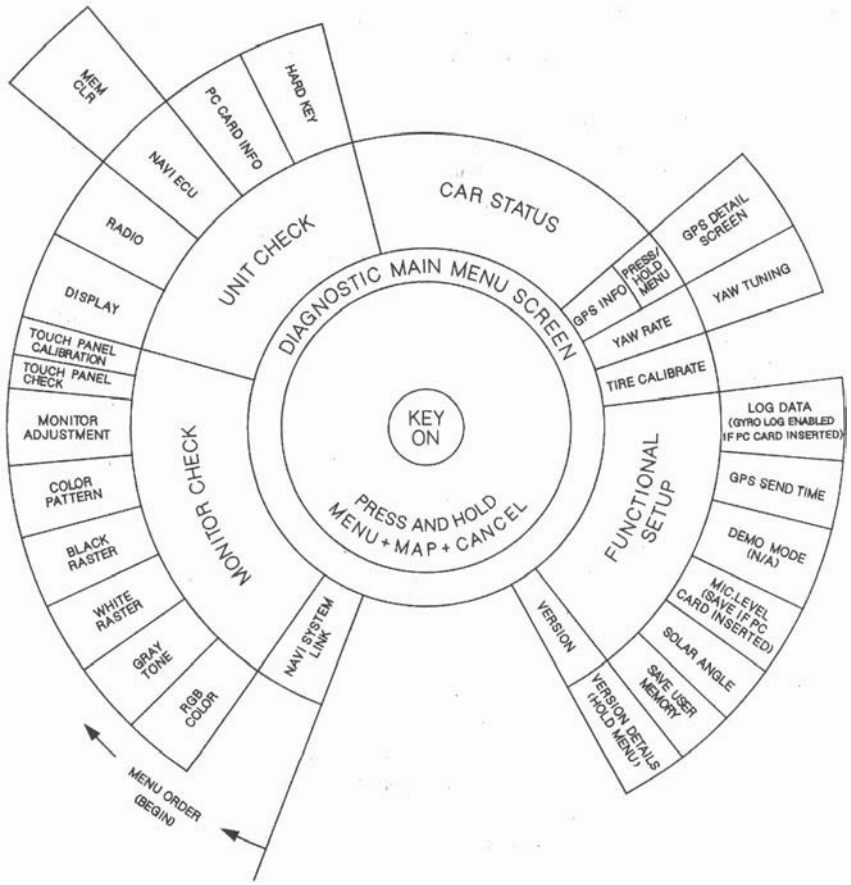

Navigation Unit Inputs and Outputs for Connector A (17P)

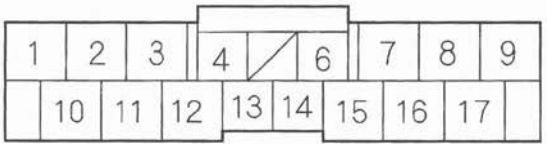

Wire side of female terminals

Terminal Number	Wire Color	Terminal Name	Description	Voltage (about)	Symptom
1	RED	ILL (−)	Ground for illumination light	With full dash lights brightness, 0 V	If open: When brightness = "Auto", night mode for the display is inoperative when lights on. If short to ground: No change to display.
9	BLK	RADIO GND (Ground)	Ground for display unit	0 V	If open: When brightness = "Auto", night mode for the display is inoperative when lights on. If short to ground: No change to display.
10	GRY	ILL (+) (Illumination positive)	Parking light on signal from dash and console lights, under-hood "Relay fuse box"	Light on = battery voltage, Lights off = 0 V	If open: When brightness = "Auto", night mode for the display is inoperative when lights on. If short to ground: Blows fuse 14 in under-dash fuse/relay box.
13	BLU	VSP (Vehicle speed pulse)	Vehicle speed pulse signal from PCM	Pulses 0—5 V: Average 2.5 V, when moving	If open: No vehicle speed pulses. Diagnostic screen "Car Status", VSP Navi = 0. If short to ground: No vehicle speed pulses. Diagnostic screen "Car Status", VSP Navi = 0.
17	LT GRN	+B (+B power source)	Continuous power source	Battery voltage	If open: Screen completely off (no backlight visible). If short to ground: Blows fuse No. 17 (15 A) in the under-hood fuse/relay box.

NOTE: Refer to the audio section for the connector B input and outputs (see page 23-12).

(cont'd)

System Description (cont'd)

Navigation Unit Inputs and Outputs for Connector C (12P)

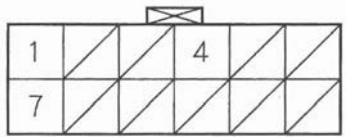

Wire side of female terminals

Terminal Number	Wire Color	Terminal Name	Description	Voltage (about)	Symptom
1	WHT	+B BACK UP	Continuous power source	Battery voltage	If open: Display picture goes out (display back light still on). NOTE: System will reboot to "enter code" screen. If short to ground: Blows fuse No. 23 (10 A) in the under-dash fuse/relay box.
4	BLK	GND	Ground for navigation unit	0 V	If open: No effect on system. If short to ground: No effect for system.
7	BRN	BACK LT—	Reverse signal of select laver from "Multiplex integrated Control unit" (A/T)	In reverse, battery voltage: Otherwise 0 V	If open: Navigation never sees the reverse signal and rearview camera does not come on when in reverse. Diagnostic screen "Car Status", "Back" = 0. If short to ground: Blows fuse No. 23 (10 A) in the under-dash fuse/relay box.

Navigation Unit Inputs and Outputs for Connector D (5P)

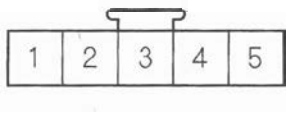

Wire side of female terminals

Terminal Number	Wire Color	Terminal Name	Description	Voltage (about)	Symptom
1	RED	MIC GND	Ground for microphone signal	0 V	If open: No microphone signal shown in diagnostics: "Navi System Link" and Functional Set up "Mic Level". If short to ground: No effect on voice recognition.
2	GRN	MIC SIG+	Microphone output signal positive	4—5 V (with TALK button pressed)	If open: No microphone signal shown in diagnostic screens: "Navi System Link" and Functional Setup "Mic Level". If short to ground: No microphone signal shown in diagnostic screens: "Navi System Link" and Functional Setup "Mic Level".
3	GRY	MIC SHIELD	Shield for terminal No. 1, 2, 5	0 V	If open: No effect on voice recognition. If short to ground: No effect on voice recognition.
4	GRN	HFT NAVI GUIDE	Steering switch output	4—5 V (TALK button pressed) 2.5—3 V (BACK button pressed)	If open: Steering wheel TALK, and BACK switch/buttons do not work. If short to ground: Steering wheel TALK, and BACK switch/buttons do not work.
5	WHT	MIC ADPT	Control signal for microphone	0 V	If open: No effect on voice recognition. If short to ground: No effect on voice recognition.

(cont'd)

System Description (cont'd)

Navigation Unit Inputs and Outputs for Connector H (2P)

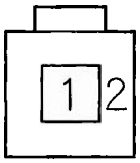

Wire side of female terminals

Terminal Number	Wire Color	Terminal Name	Description	Voltage (about)	Symptom
1	——	GPS	GPS signal (5 V in, GPS signal out)	5 V	If open: GPS icon on screen is white, system links screen ANT shows "NG." If short to ground: GPS icon on screen is white, system links screen ANT shows "NG".
2	——	GPS SH	Shield for terminal No. 1	0 V	If open: GPS icon on screen is white, system links screen ANT shows "NG." If short to ground: No effect on system.

Navigation Unit Inputs and Outputs for Connector K (7P)

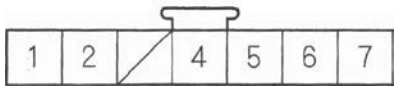

Wire side of female terminals

Terminal Number	Wire Color	Terminal Name	Description	Voltage (about)	Symptom
1	GRN	CAMERA VCC (VCC supply)	Power source for rearview camera	7 V	If open: No rearview camera image. If short to ground: When put into reverse, the navigation screen goes black (backlight still operative).
2	WHT	CAMERA GND (Ground)	Ground for rearview camera	0 V	If open: No change to rearview camera image. If short to ground: No change to rearview camera image.
4	RED	VIDEO GND (Ground camera)	Ground for camera signal	0 V	If open: No change to rearview camera image. If short to ground: No change to rearview camera image.
5	BLK	VIDEO (Video camera)	Video signal for rearview camera	0.3 V	If open: No change to rearview camera image. If short to ground: No change to rearview camera image.
6	GRY	CAMERA SH (Shield camera)	Shield for terminal No. 1 to No. 7	0 V	If open: No change to rearview camera image. If short to ground: No change to rearview camera image.
7	BRN LT BLU BRN	CAMERA ADPT (Adaptive camera)	Control signal for rearview camera	0 V	If open: No change to rearview camera image. If short to ground: No change to rearview camera image.

(cont'd)

System Description (cont'd)

Rearview Camera Inputs and Outputs for 6P Connector

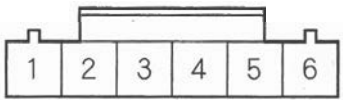

Wire side of female terminals

Terminal Number	Wire Color	Terminal Name	Description	Voltage (about)	Symptom
1	GRN	CAMERA VCC (VCC supply)	Power source for rearview camera	8 V	If open: No rearview camera image. If short to ground: When put into reverse, the navigation screen goes black (display backlight still operative).
2	WHT	CAMERA GND (Ground)	Ground for rearview camera	0 V	If open: No change to rearview camera image. If short to ground: No change to rearview camera image.
3	RED	VIDEO GND (Ground camera)	Ground for camera signal	0 V	If open: No change to rearview camera image. If short to ground: No change to rearview camera image.
4	BLK	VIDEO (Video camera)	Video signal for rearview camera	0.3 V	If open: No change to rearview camera image. If short to ground: No change to rearview camera image.
5	GRY	CAMERA SH (Shield camera)	Shield for terminal No. 5	0 V	If open: No change to rearview camera image. If short to ground: No change to rearview camera image.
6	BRN LT BLU BRN	CAMERA ADPT (Adaptive camera)	Control signal for rearview camera	0 V	If open: No change to rearview camera image. If short to ground: No change to rearview camera image.

Navigation System Connector Location

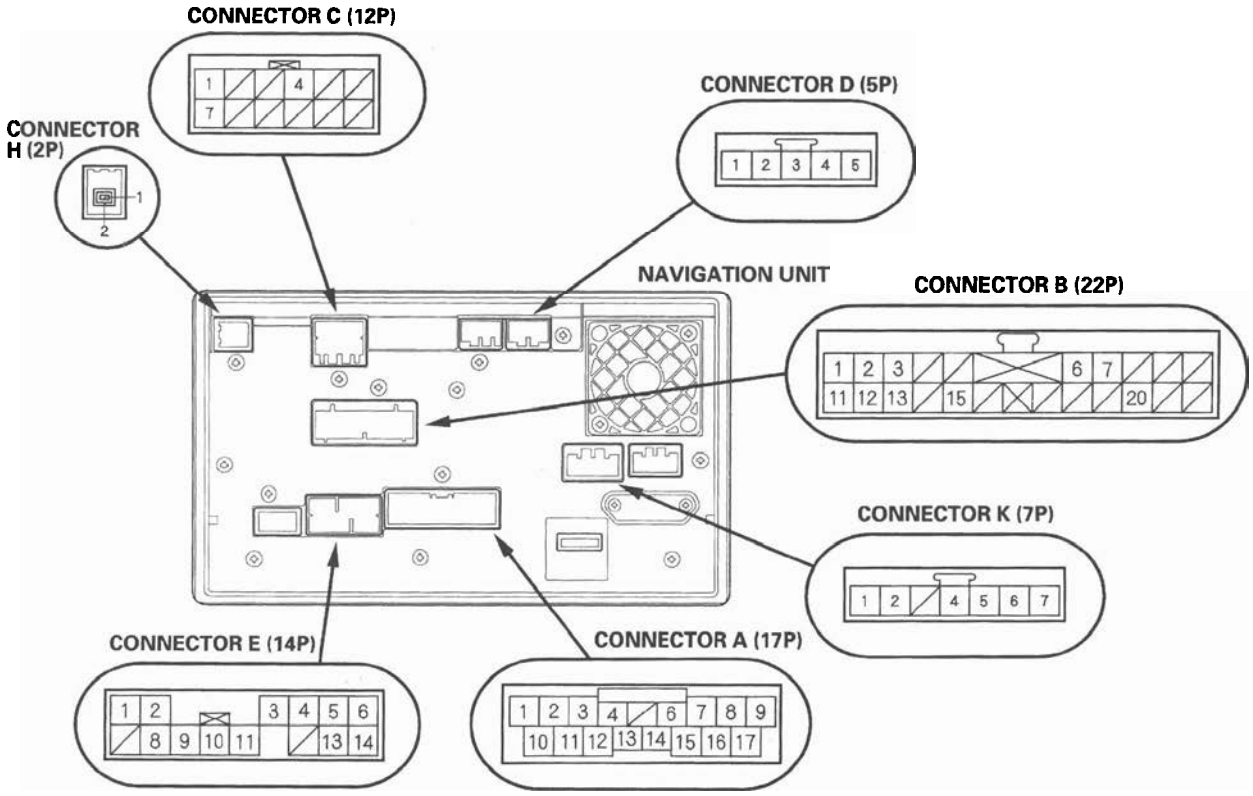

XM RECEIVER 14P CONNECTOR

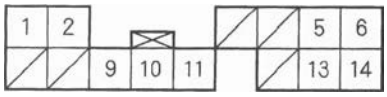

REARVIEW CAMERA 6P CONNECTOR

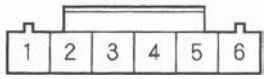

Wire side of female terminals

Circuit Diagram

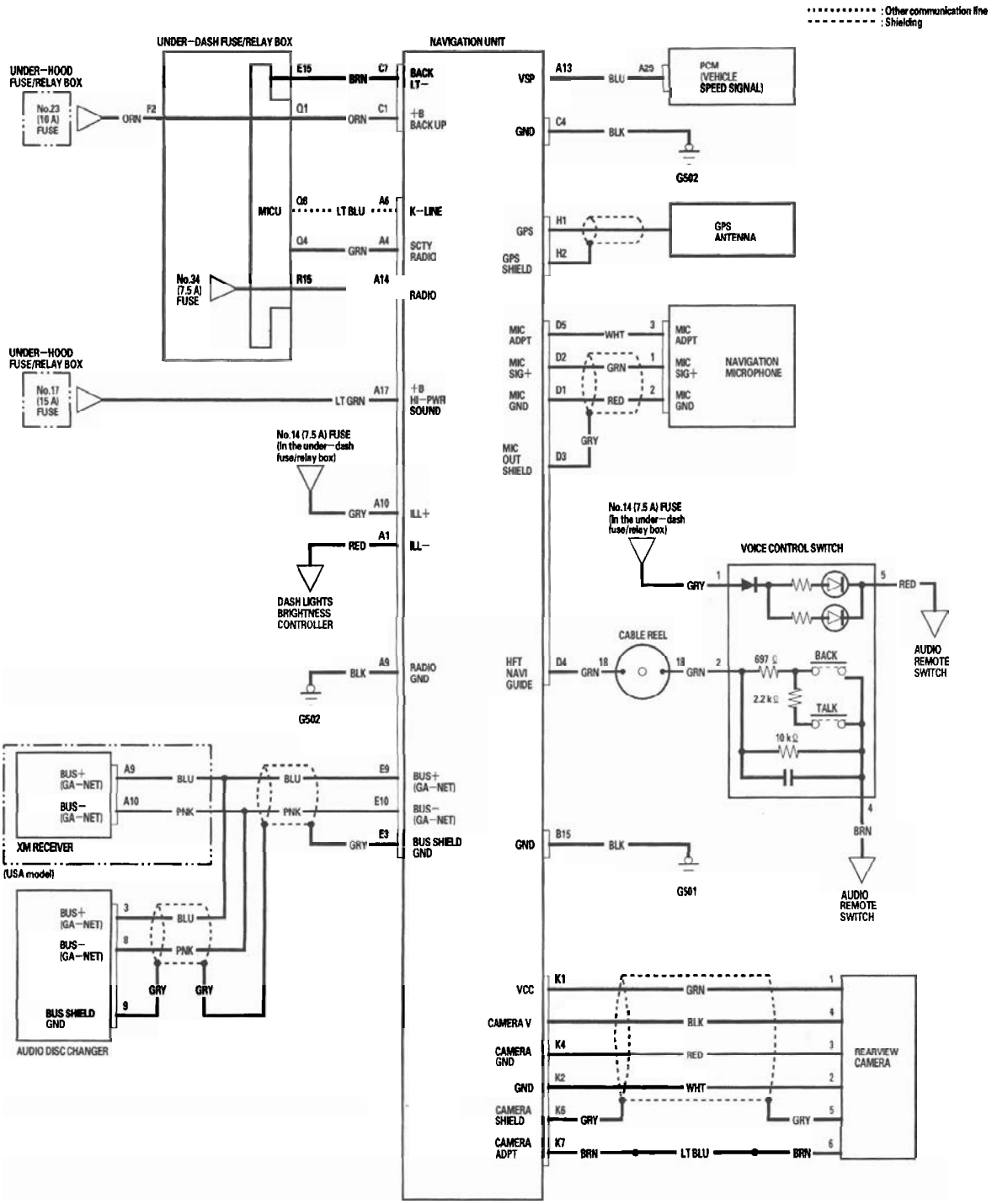

Symptom Troubleshooting

No picture is displayed

NOTE: Always check the connectors for poor connections or loose terminals between the audio unit, audio disc changer, navigation unit, and XM receiver.

1. Check the No. 23 (10 A) fuse in the under-hood fuse/relay box and No. 34 (7.5 A) fuse in the under-dash fuse/relay box, and reinstall the fuse if it is OK.

   Is the fuse OK?

   YES—Go to step 2.

   NO—Replace the fuse and recheck.■

2. Turn the ignition switch to ACC (I).
3. Operate the radio, and listen to the audio.

   Can you hear the audio?

   YES—Go to step 4.

   NO—Refer to audio system troubleshooting.■

4. Turn the ignition switch ON (II).
5. Eject the navigation DVD.

   Is the DVD the correct color (turquoise)?

   YES—Go to step 6.

   NO—Replace the DVD.■

6. Inspect the DVD read surface for damage or dirt.

   Is it damaged or dirty?

   YES—Clean the DVD, or replace it if needed. Reinstall the DVD and recheck.■

   NO—Go to step 7.

7. Measure the voltage between navigation unit connector A (17P) terminals No. 14 and body ground, and between terminal No. 17 and body ground, and navigation unit connector C (12P) No. 1 terminal and body ground.

NAVIGATION UNIT CONNECTOR A (17P)

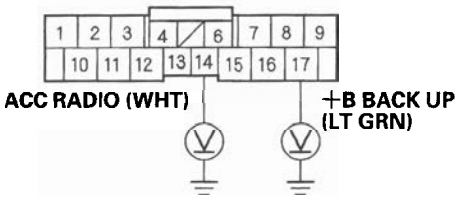

Wire side of female terminals

NAVIGATION UNIT CONNECTOR C (12P)

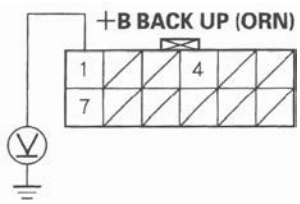

Wire side of female terminals

Is there battery voltage on both terminals?

YES—Go to step 8.

NO—Repair open in the wire between the under-hood fuse/relay box and the navigation unit.■

(cont'd)

Symptom Troubleshooting (cont'd)

8. Measure the voltage between the navigation unit connector A (17P) terminal No. 9 and body ground, and between navigation unit connector C (12P) terminal No. 4 and body ground.

NAVIGATION UNIT CONNECTOR A (17P)

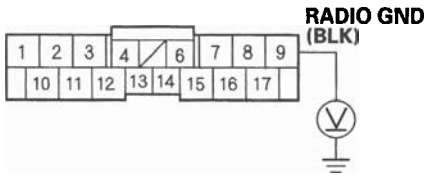

Wire side of female terminals

NAVIGATION UNIT CONNECTOR C (12P)

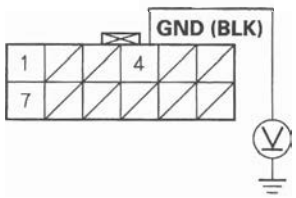

Wire side of female terminals

Is there less than 0.2 V?

YES—Replace the navigation unit (see page 23-140). ■

NO—Repair open or high resistance in the wire between the navigation unit and body ground (G502 and G504) (see page 22-30). ■

Picture is missing a color or tone or is an odd color

NOTE:
- Always check the connectors for poor connections or loose terminals.
- Before troubleshooting, get the navigation system 4-digit anti-theft code.
- After troubleshooting, enter the navigation system 4-digit anti-theft code.

1. Go into the Diagnostic Menu and use "RGB Color" test under Monitor Check (see page 23-123).

   Are the red, green, and blue circles shown?

   YES—If the image does not change and the circles are OK. The system is OK at this time. Check the set-up menu for color choices. ■

   NO—Replace the navigation unit (see page 23-140). ■

Picture has lines/rolls/other issues or is an odd color

NOTE:
- Always check the connectors for poor connections or loose terminals.
- Before troubleshooting, get the navigation system anti-theft code.
- After troubleshooting, enter the navigation system anti-theft code.

1. Eject the navigation DVD.

   Is the DVD the correct color (turquoise)?

   YES—Go to step 3.

   NO—Replace the DVD. ■

2. Inspect the DVD read surface for damaged or dirt.

   Is it damaged or dirty?

   YES—Clean the DVD, or replace it if needed. Reinstall the DVD and recheck. ■

   NO—Go to step 3.

3. Check for electronic aftermarket accessories (possibly hidden) mounted near the navigation unit.

   Are there any electronic accessories?

   YES—Disable the accessories, and recheck. ■

   NO—Go to step 4.

4. Go into the Diagnostic mode, and use the "RGB Color" test under Monitor Check (see page 23-123).

   Is the picture missing a red, green or blue color circle?

   YES—Do the troubleshooting for picture is missing a color or tone or is an odd color (see page 23-110). ■

   NO—Go to step 5.

5. Turn the ignition switch to the ACC (I) position and observe the navigation picture.

   Did the image improve?

   YES—Check for sources of electrical noise, such as poor battery connection, alternator, defective battery, aftermarket accessories or cell phone, and poor terminal fits at the display or control unit. ■

   NO—Replace the navigation unit (see page 23-140). ■

Symptom Troubleshooting (cont'd)

Navigation display buttons do not work or respond properly

NOTE:
- Always check connectors for poor contact and poor pin fits.
- Before troubleshooting, get the navigation anti-theft code.
- Before troubleshooting, write down all the XM radio presets, and re-enter them after repairs are complete.
- Always verify the concern and compare the system operation to a known-good vehicle with the same software loaded whenever possible. If the concern is duplicated in the known-good vehicle, then it can be considered a characteristic of the system.

1. Turn the ignition switch ON (II).

   Does the navigation display turn on?

   YES—Replace the navigation unit (see page 23-140). ■

   NO—Refer to troubleshooting for no picture is displayed (see page 23-109). ■

GPS icon is white or not shown

NOTE:
- Make sure the vehicle is parked outside and away from buildings.
- Refer to GPS Information (see page 23-128) for realtime satellite reception display.
- Check for window tinting above the GPS antenna and any non-OEM accessories mounted near the navigation unit or GPS antenna.

1. Check for metallic window tint on the windshield and electronic aftermarket accessories (possibly hidden) mounted near the GPS antenna or the navigation unit.

   Is there metallic window tint or electronic accessories?

   YES—Remove tint or the accessories and recheck. ■

   NO—Go to step 2.

2. Go into the Diagnostic Menu and use the "Navi System Link" test (see page 23-122) to check the GPS antenna.

   Is the "GPS Ant" icon red?

   YES—Use the "Navi ECU" test under Unit Check (see page 23-125) to check for a kinked, crushed, or disconnected GPS antenna wire. If necessary, try a known-good GPS antenna. If icon is still red, replace the navigation unit. ■

   NO—Check that nothing is blocking the GPS antenna located behind the hazard warning switch and recheck. Substitute a known-good navigation unit, and recheck. ■

Voice guidance cannot be heard, is broken up, or there is too much static

NOTE:
- Always check that the volume setting and voice feedback are turned ON.
- Always check the connectors for poor connection or loose terminals.
- Before troubleshooting, make sure you have the navigation system 4-digit anti-theft code, then write down the XM radio presets.
- After troubleshooting, enter the navigation system anti-theft code, then enter the XM radio presets.

1. Press the display unit SET-UP button.

2. Check the volume setting for the navigation system.

   Is it set to OFF?

   YES—Set the volume to an audible level.■

   NO—Go to step 3.

3. Check the radio operation.

   Can you hear the radio?

   YES—Go to step 4.

   NO—Troubleshoot the audio system.■

4. Go into the Diagnostic Menu, and use the "Navi System Link" test (see page 23-122) to check the radio.

   Is the "Radio" icon red?

   YES—Replace the navigation unit (see page 23-140). ■

   NO—Go to step 5.

5. Check the voice control switch (see page 23-141).

   Is voice control switch OK?

   YES—Replace the navigation unit (see page 23-140). ■

   NO—Replace the voice control switch unit (see page 23-141).■

Voice recognition does not work

NOTE:
- Always check the connector for poor connection or loose terminals.
- Before troubleshooting, make sure you have the navigation system 4-digit anti-theft code, then write down the XM radio presets.
- After troubleshooting, enter the radio and navigation system anti-theft codes, then enter the XM radio presets.

Before assuming that a voice complaint is hardware related, ensure that the voice control system is being operated correctly.

- Adjust the air flow from the air conditioning vents so that they do not blow against the microphone on the ceiling.
- Set the fan speed to low (1 or 2).
- Make sure you are on the correct screen when trying to issue a voice command. For instance, the command "Find the nearest Italian Restaurant" only works on a Map screen.
  (See the Navigation System Manual for a complete list of allowed voice commands for the information being displayed.)
- Close the windows, moonroof, and doors.
- Keep background noise and conversations to a minimum.
- Pause after pressing the TALK button, then give a voice command clearly in a natural speaking voice. If the system cannot recognize your command, speak louder.
- If the microphone picks up voices other than yours, the system may not interpret your voice commands correctly.
- If you speak a command with something in your mouth, or your voice is too husky, the system may misunderstand your command.
- Compare the system operation with a known-good vehicle. Have more than one person test the system operation. If the known-good vehicle performs the same, it is a characteristic of the system.

(cont'd)

Symptom Troubleshooting (cont'd)

1. Go into the Diagnostic Menu and use the "Mic Level" test under Functional Setup (see page 23-132) to check the operation of the TALK and BACK buttons.

   Are the TALK and BACK buttons operational?

   YES—Go to step 2.

   NO—Check for an open, or short to ground on the navigation unit connector D (5P) terminal No. 4. ■

2. Use the "Mic Level" diagnostic under Functional Setup (see page 23-132) to check the operation of the microphone.

   Is the microphone operational?

   YES—Check the operation of the voice control system (see the Navigation System Manual) and compare system operation with a known-good vehicle. ■

   NO—Go to step 3.

3. Check the voice control switch (see page 23-141).

   Is voice control switch OK?

   YES—Check for a loose front map light (microphone) assembly. If OK, check for an open, or short to ground on navigation unit connector D (5P) terminals No. 1, No. 2, and No. 5. If the wire is OK, substitute a known-good microphone assembly. ■

   NO—Replace the voice control switch (see page 23-141). ■

Vehicle position icon constantly leaves road, moves erratically, or is very far from actual position

1. Check the GPS icon on the navigation picture.

   Is the GPS icon on the map screen?

   YES—Do the troubleshooting for GPS icon is white or not shown (see page 23-112). ■

   NO—Go to step 2.

2. Go into the Diagnostic Menu, and use the "Yaw Rate" test (see page 23-130) to check the yaw rate sensor.

3. Go into the Diagnostic Menu, and use the "Car Status" test (see page 23-127) to check the vehicle speed pulse.

   Are the yaw rate sensor and vehicle speed pulse OK?

   YES—The problem may be a normal characteristic. Check to see if the problem occurs in the same place. If it does, the problem could be in the database. Compare to a known-good vehicle under the same conditions. If you can duplicate the problem, report it. Refer to the Customer Assistance section of the navigation system manual, "Reporting Errors".

   NO—If the problem is the yaw rate sensor, replace the navigation unit (see page 23-140). If the problem is the vehicle speed pulse, troubleshoot the vehicle speed signal circuit. ■

DVD screen error messages

NOTE:
- Check the navigation system manual for a list of common DVD screen error messages and the probable causes.
- Go into the Diagnostic Menu, and use the "Car Status" test (see page 23-127) to check the status of the display
- Check that the correct colored disc is installed.

1. Eject the navigation DVD.

   Is the DVD the correct color (turquoise)?

   YES—Go to step 2.

   NO—Replace the DVD.■

2. Check the DVD-ROM reading surface for scratches.

   Are there scratches?

   YES—Replace the DVD-ROM.■

   NO—If the problem occurs occasionally when the system is cold, this is normal. If the problem occurs frequently when driving, replace the navigation unit (see page 23-140).■

System always comes up in in-line diagnostic mode

1. When a navigation control unit is powered up for the first time at the factory, the "factory diagnosis" screen (In Line Diag) appears. Normally the factory does the steps necessary to verify proper operation and terminate the "factory diagnostic." Until the proper confirmation sequence is done, the screen appears every time the vehicle is started.

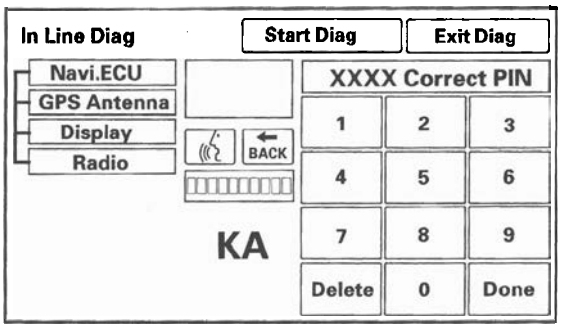

2. Follow the steps to prevent the screen from showing up in the future:

   Hold down the buttons (Menu+Map/Guide+Cancel) for about 5 seconds (the "Select Diagnosis Items" screen will appear).
   - Hold down the Map/Guide button for 5–10 seconds (A screen with a "Complete" button, will appear).
   - Touch "Complete," and then the "Return" button (the system may re-boot).
   - Restart the vehicle, and confirm normal operation by completing the "PDI of the navigation system" service bulletin.

Symptom Troubleshooting (cont'd)

Display day/night mode does not work

NOTE:
- Always check the connectors for poor connection or loose terminals.
- Before troubleshooting, get the navigation system anti-theft code.
- After troubleshooting, enter the navigation system anti-theft code.
- In the set-up/colors menu, make sure that both the day and night map background colors are not set to white.
- Full brightness on the instrument panel brightness control causes the system to stay in the day mode, even when the lights are on.

1. Make sure the instrument panel brightness control is not on full brightness. Turn the headlights on, and adjust the dash brightness to the middle range.

2. Change the day/night mode under Set-up to "Auto" and recheck.

   Does the display change to day and night modes when turning the headlights on and off?

   YES—The system is OK at this time. ■

   NO—Go to step 3.

3. Go into the Diagnostic Menu, and use the "Car Status" test to check for an ILL signal (see page 23-127).

   Is the "ILL" signal OK?

   YES—Replace the navigation unit (see page 23-140). ■

   NO—Check the ILL+ circuit between the navigation unit and No. 14 (7.5 A) fuse in the under-dash fuse/relay box. ■

System locks up or freezes constantly

NOTE: Check that the correct colored DVD is installed.

1. Start the engine, turn the ignition switch OFF, then turn the ignition switch ON (II).

   Does the system reboot?

   YES—The system is OK at this time. ■

   NO—Make sure the DVD has the correct color label (turquoise). Check the DVD for scratches or damage, and the navigation unit for water damage. If OK, go into the Diagnostic Menu, and do all of the "Unit Check" tests (see page 23-125) and "Car Status" tests (see page 23-127). Also check for low battery charge or poor charging system performance. ■

Vehicle icon wanders across the map when driving (does not follow a displayed road) or map or vehicle ICON spins

NOTE: This symptom is caused by a defective yaw rate sensor. Do this diagnostic when the vehicle is cold and warm.

1. Go into the Diagnostic Menu, and do the "Yaw Rate" test (see page 23-130) and "Car Status" tests (see page 23-127).

   Are the values correct?

   YES—The system is OK.■

   NO—Replace the navigation unit (see page 23-140). ■

Vehicle icon moves by itself when parked

NOTE:
- Always check the connectors for poor connection or loose terminals.
- Before troubleshooting, get the navigation system anti-theft code, then write down the XM radio presets.
- After troubleshooting, re-enter the anti-theft code, and re-initialize the navigation system, then enter the XM radio presets.

1. Start the engine.
2. From the main menu, select places, then select any destination, and begin the trip.
3. With the vehicle parked, watch the vehicle icon on the display.

   Does the vehicle position icon move by itself?

   YES—Replace the navigation unit (see page 23-140). ■

   NO—The system is OK at this time.■

Symptom Troubleshooting (cont'd)

Navigation stays on with ignition switch off

NOTE:
- Always check the connectors for poor connection or loose terminals.
- Before troubleshooting, get the navigation system anti-theft code, then write down the XM radio presets.
- After troubleshooting, re-enter the anti-theft code, and re-initialize the navigation system, then enter the XM radio presets.
- Check for aftermarket accessories that use the same power circuit. A feedback can cause this problem.

1. Remove the key from the ignition switch.

   Does the navigation screen stay on?

   YES—Go to step 2.

   NO—The system is OK at this time. ■

2. The vehicle may have been used as a demonstration vehicle at an event like an auto show. In these events, power is often jumpered to the navigation system so that the ignition key is not needed in the vehicle. At the end of the show, the jumper wire may not have been removed. Check the navigation unit connector A (17P) for a "non-factory" jumper wire in series with the factory cable.

   Is there a jumper wire?

   YES—Remove the jumper wire, and re-test. Return the jumper wire to Tech Line. ■

   NO—Go to step 3.

3. Check if the audio unit works.

   Does the audio unit work with the ignition switch off?

   YES—Troubleshoot the ACC circuit (navigation connector A (17P) terminal No. 14) for a short to power with another circuit. ■

   NO—Replace the navigation unit (see page 23-140). ■

Navigation cannot control audio/disc

1. Make sure the anti-theft code for the navigation system is entered.

2. Go into the Diagnostic Menu, and use the "Navi System Link" test (see page 23-122).

   Is the "Radio" icon red?

   YES—Do the troubleshooting for voice guidance cannot be heard (see page 23-113). ■

   NO—Go to step 3.

3. Substitute a known-good navigation unit (see page 23-140), and recheck.

   Can the navigation control audio?

   YES—Replace the navigation unit (see page 23-140). ■

   NO—Do the audio system troubleshooting. ■

Navigation cannot control XM radio

- Review the audio system symptom diagnostic section.
- If you can only turn to channels 000, 001,174, and 247, make sure the audio unit is set to the channel mode (see owner's manual), if it is set to channel mode, call XM satellite radio customer support and check the account activation status.

1. Substitute a known-good navigation unit (see page 23-140), and recheck.

   Can the navigation control the XM radio?

   YES—Replace the navigation unit (see page 23-140). ■

   NO—Do the audio system troubleshooting. ■

Navigation frequently asks for anti-theft code and needs GPS initialization

1. Check the No. 23 (10 A) and No. 17 (15 A) fuses in the under-hood fuse/relay box and the No. 34 (7.5 A) fuse in the under-dash fuse/relay box.

   Are the fuse OK?

   YES—Go to step 2.

   NO—Replace the fuse. ■

2. Turn the ignition switch ON (II).

3. Measure the voltage between navigation unit connector A (17P) terminal No. 14 and body ground, between terminal No. 17 and body ground, and between navigation unit connector C (12P) terminal No. 1 and body ground.

NAVIGATION UNIT CONNECTOR A (17P)

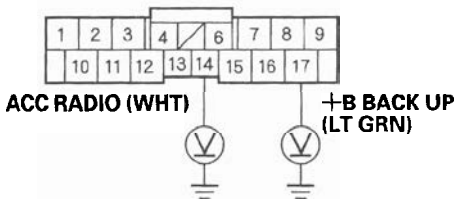

Wire side of female terminals

Is there battery voltage on all terminals?

YES—Go to step 4.

NO—Repair open in the wire between the appropriate fuse/relay box and the navigation unit. ■

(cont'd)

Symptom Troubleshooting (cont'd)

4. Measure the voltage between navigation unit connector A (17P) terminal No. 9 and body ground, between navigation unit connector C (12P) terminal No. 4 and body ground, and between navigation unit connector B (22P) terminal No. 15 and body ground.

NAVIGATION UNIT CONNECTOR A (17P)

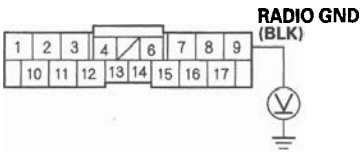

Wire side of female terminals

NAVIGATION UNIT CONNECTOR B (22P)

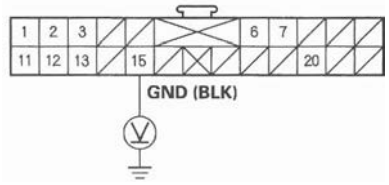

Wire side of female terminals

NAVIGATION UNIT CONNECTOR C (12P)

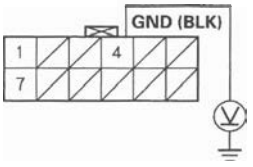

Wire side of female terminals

Is there less than 0.1 V?

YES—Replace the navigation unit (see page 23-140). ■

NO—Repair open in the wire between the navigation unit and body ground (G502) (see page 22-28), or navigation connector C (12P) and body ground (G504) (see page 22-28). ■

OPEN/CLOSE function of the display does not work

NOTE:
- Make sure nothing is lodged behind the display.
- If the display's "Open/Close" button does not work, you must manually open the display to obtain the customer's navigation DVD, Audio CD, and PC card (see page 23-139).

1. Press the OPEN/CLOSE button.

Does the display open and/or close normally?

YES—The system is OK at this time. ■

NO—Replace the navigation unit (see page 23-140). ■

Navigation display will not close

NOTE: Check for, and remove, any objects or debris jammed behind the display.

1. Check the CD slot. Look for foreign objects, stuck CD, broken or sticking slot.

   Is the CD slot OK?

   YES—Go to step 2.

   NO—Replace the navigation unit (see page 23-140).

2. Check the PC Card.

   Is the PC Card fully seated?

   YES—Go to step 3.

   NO—Reseat the card or remove it. If it still won't close, replace the navigation unit.■

3. Check the PC card.

   Does the PC card have its memory clip properly installed?

   YES—Go to step 4.

   NO—Remove the card. The door won't close if the memory chip is missing or improperly installed.■

4. Press the OPEN/CLOSE button.

   Does the display open and/or close normally?

   YES—The system is OK at this time.■

   NO—Replace the navigation unit (see page 23-140).
   ■

Navigation display does not open or opens part way

NOTE: Check for, and remove, any objects or debris jammed behind the display.

1. Press the OPEN/CLOSE button.

   Does the unit beep?

   YES—Go to step 2.

   NO—Replace the navigation unit (see page 23-140).
   ■

2. Press the OPEN/CLOSE button.

   Does the display open normally?

   YES—The system is OK at this time.■

   NO—Replace the navigation unit (see page 23-140).
   ■

System Diagnostic Mode

Start-up procedure and Diagnosis Menu

1. Turn the ignition switch to the ON (II) position.

   Press and hold the Menu, the Map/Guide, and the Cancel buttons. Keep them pressed for approximately 3 seconds. The display screen then goes directly to the Diagnostic Menu.

DIAGNOSTIC MENU SCREEN

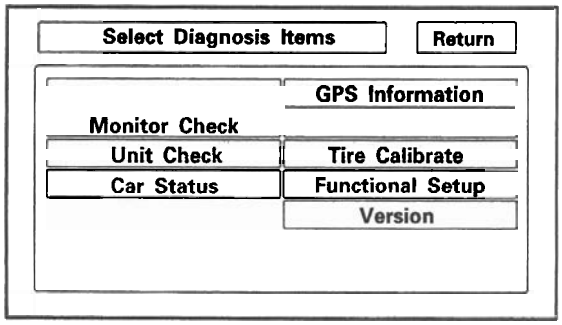

2. After the display changes to the Diagnostic Menu, select the item you want to check, and the test will begin. To return to the previous screen, select "Return".

   - Navi System (Link)
   - Monitor Check
   - Unit Check
   - Car Status
   - GPS Information
   - Yaw Rate
   - Tire Calibrate
   - Functional Setup
   - Version

Navi System Link

- This diagnostic step tests the cables connecting the navigation components. Ensure that the ignition switch is in the ON (II) position. When the diagnosis begins, you hear a "bong" sound. The system is in a "Detecting" mode, and is waiting for all items in white to be tested. This includes the voice control switch (TALK/BACK buttons), and the microphone. Press the TALK button on the steering wheel, and in a normal voice, say "testing". The Talk indicator on the screen should turn green, and the voice level indicator should move to at least the 6th bar to pass. Next, press the BACK button. The "Cancel" indicator should turn green.
- If all of the communication lines connecting the system components, and the TALK/BACK buttons/ microphone check out OK (all block diagram items are green), then the "OK" indicator turns green.
- If there is a problem with the system, the faulty system component item turns red, and the screen will show "NG" in red. Use the troubleshooting index, and other diagnostic screens to help locate the problem.
- The indicator on the screen may not change until you cycle the ignition switch. After repairing the affected cable or system, repeat this diagnostic.
  NOTE: Green boxes and green "OK" indicate that the communications lines (cables) are intact. This diagnostic does not necessarily imply that the individual components are functioning properly. For instance, the GPS antenna wire may be crushed, but still show as green. A road test, or other diagnostic may be necessary to find the problem.
- Select "Return" to return to the Diagnostic Menu, or the "Exit Diag" button to exit.

NOTE: The Mic Level indicator must reach the 6th bar or greater to pass the test.

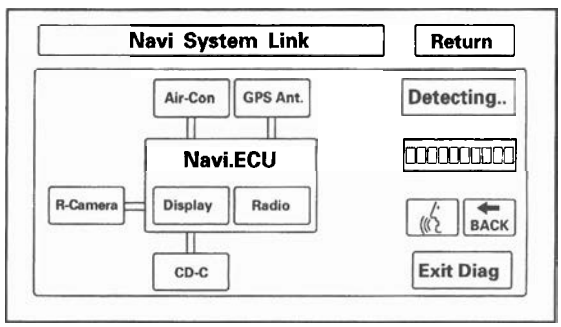

Monitor Check

Overview of navigation display

The illumination input from the gauge brightness control provides back lighting for the buttons surrounding the screen.

These screens allow you to troubleshoot the navigation display. Select the item you want to troubleshoot, and follow the diagnostic instructions.

- RGB Color
- Gray Tone
- White Raster
- Black Raster
- Color Pattern
- Monitor Adjustment
- Touch Panel Check
- Touch Panel Calibration

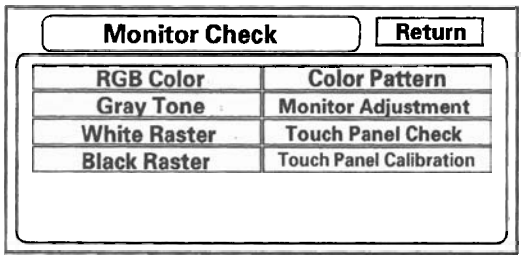

RGB Color
This screen verifies that the navigation display is receiving the video (R, G, B and Composite sync) signals properly. The three primary colors should all be shown without distortion. The combination of all three should produce a central white section. If any of the colors are missing, troubleshoot for the color signal (see page 23-110). If the picture has lines in it, or scrolls horizontally or vertically, troubleshoot for a Composite sync problem (see page 23-111).

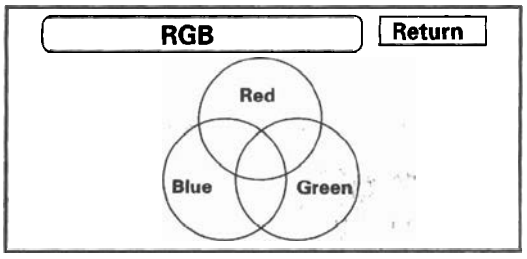

Gray Tone
This screen looks for problems with contrast. You should be able to see the changes from bar to bar across the scale.

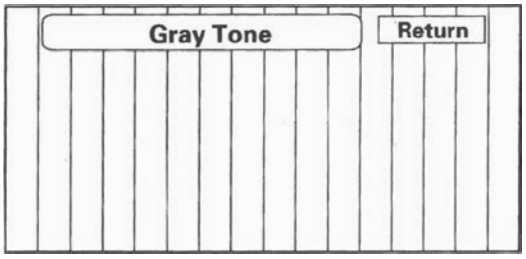

White Raster
This diagnostic screen checks for pixels that may be "dead" (off). The entire display must be white. If pixels are "dead", replace the navigation unit.

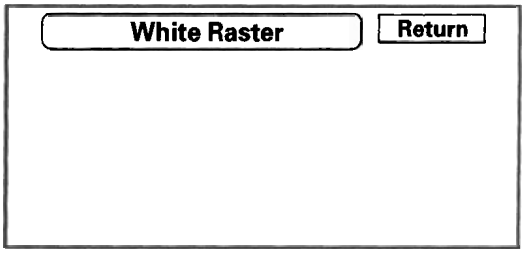

(cont'd)

System Diagnostic Mode (cont'd)

Black Raster
The entire display must be black. This diagnostic screen checks for pixels that may be "stuck" (on). If pixels are "stuck" on, replace the navigation unit.

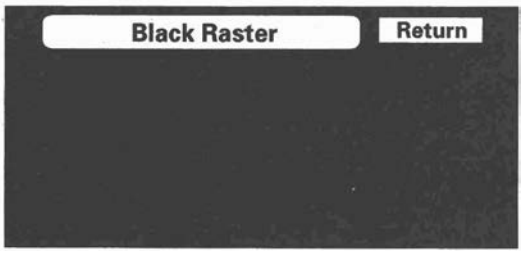

Color Pattern
The chart below shows the colors being used for the Map and Menu screens. This is for factory use only. To check the color signal use the "RGB" test.

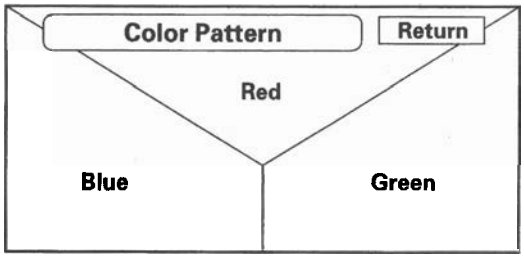

Monitor Adjustment
This allows you to center the navigation display. Use the joystick to move the picture up/down or left/right. It is unlikely that you will ever need to adjust the monitor position. The "Default" button will reset the display position to factory specifications. The factory default is 0, 0. The "H-POS" button is for factory use only.

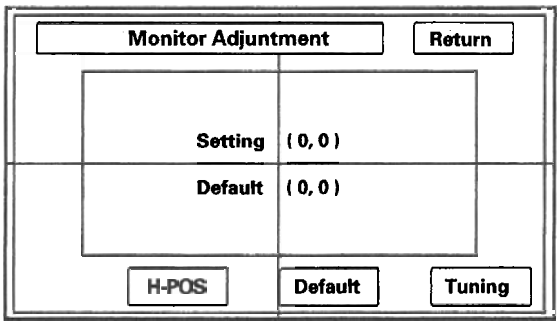

Touch Panel Check
The panel touch sensing system consists of a touch sensitive resistive membrane covering the display. Contrary to other systems using infrared beams, the screen has to be physically "touched" to make it work. The display has the capability of 479 locations (left to right), and 233 touch locations (top to bottom). The upper left hand corner is position (0, 0) and the lower right hand corner is (479, 233) as displayed. Touching anywhere on the screen will display the "coordinate" of the location, and cause the place you touch to display a "+" icon. If any areas of the screen either don't respond, or respond at some other location when touched, then replace the navigation unit.

NOTE: Unlike earlier screens that used infrared sensors, direct sunlight will not affect this test.

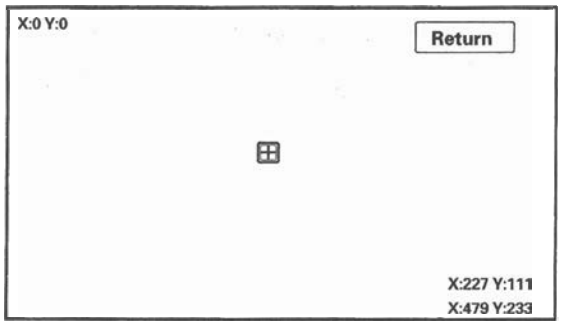

Touch Panel Calibration
The display screen uses a touch sensitive membrane. This means that every location of the entire surface of the display is touch sensitive. This diagnostic allows alignment of these touch locations with the location of the button images on the screen.

Normaly this should never need adjustment, and is used only to adjust the touch locations for parallax (the touch locations appear different when viewed at an angle). However, if an adjustment is necessary, follow this procedure:

- The screen consists of the "+" button icons. Touch the center of the five "+" buttons in order 1–5.
- To store any change you make, touch the "Set" button.
- Use the Return key to exit the diagnostic.

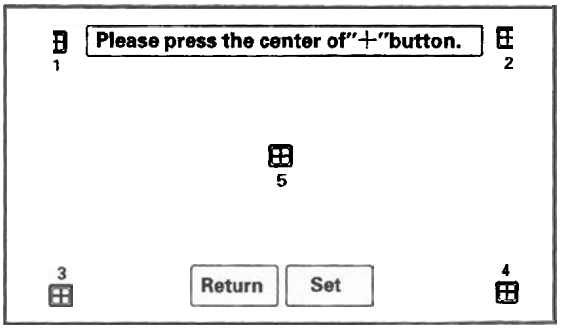

Unit Check

To start the test, select the item you want to check.

- Display
- Radio
- Navi ECU
- PC Card Info
- Hard Key

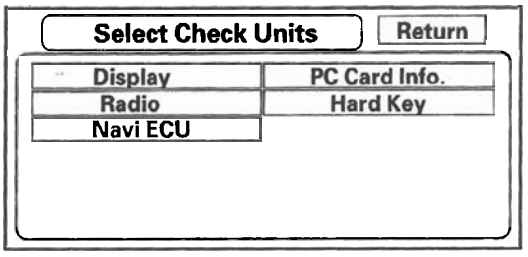

(cont'd)

System Diagnostic Mode (cont'd)

Display
This performs additional checks on the communication bus between the navi CPU and the display. In addition, the internal electronics and touch screen functionality are confirmed.

If the connection is NG, replace the navigation unit.
- Connection verifies internal communications.
- Version represents the software version for the display.

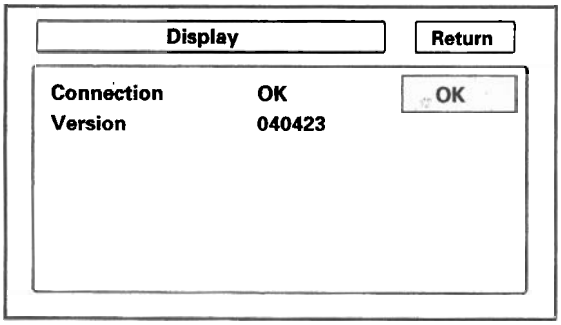

Radio
This diagnostic screen checks the internals of the radio (AM and FM) and CD player. If NG, replace the navigation unit.

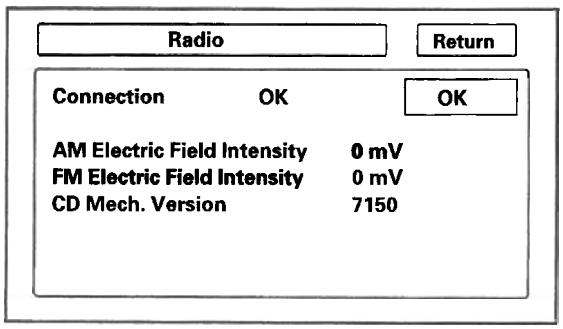

Navi ECU
This screen looks for problems with the navigation unit. When you initiate this diagnostic, the navigation unit may delay up to a minute while the diagnostic runs.

- If "V-RAM" or "D-RAM" is NG, then replace the navigation unit.
- If "GPS" indicates "NG (ANT)", then check the entire GPS antenna wire from the navigation unit to the antenna. If the wire is crushed or damaged, try a known good antenna. If this diagnostic reads OK, then order a new GPS antenna. If the diagnostic still reads NG (ANT), then replace the navigation unit.
- "DVD ROM" represents the database version on the DVD. You can also find this information in Setup by selecting System Information.
- "Serial No." should be the same as the serial number found on the underside of the navigation unit. You needs this number to obtain the security code from the Interactive Network (iN) system.
- Mem Clear is for factory use, and should never be used unless instructed by the factory. Accidental selection will erase the customer's personal data, PINS, and settings. If selected, a popup box appears asking if you want to clear the memory. If so, select "Yes".

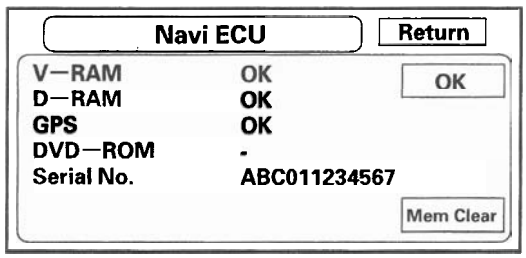

PC Card info
There is no PC Card in the PC slot, and the screen should say, "PC Card is not inserted".

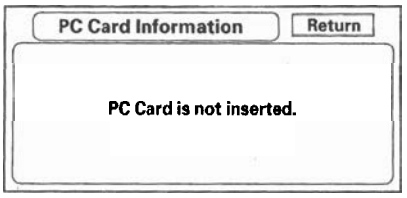

If the factory provides a PC card and instructs you to insert a card, then the screen displays the Manufacturer, and Product Name as shown in the following screen. Touch the "FILES" button to see the contents of the card.

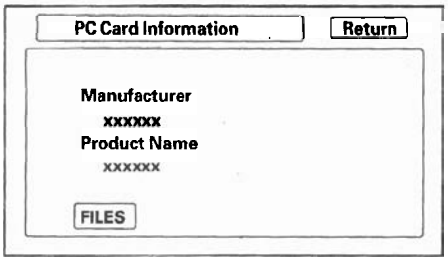

Hard Key
This diagnostic screen checks the status of each of the hard buttons surrounding the navigation display. When you press each hard button, the corresponding item on the screen should flash "blue". Touch the return key, or press and hold the joystick to exit.

NOTE: VOL/PWR knob operation (turn, push) and OPEN/CLOSE button operation are not displayed.

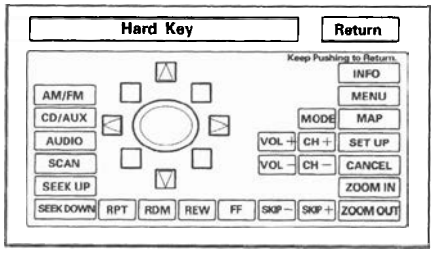

Car Status

Use this screen to confirm that the navigation unit is properly receiving input signals. Signals equal to (0) are OFF, and signals equal to (1) are ON. If the value on the display does not match the actual vehicle status, then check the wire carrying the signal.

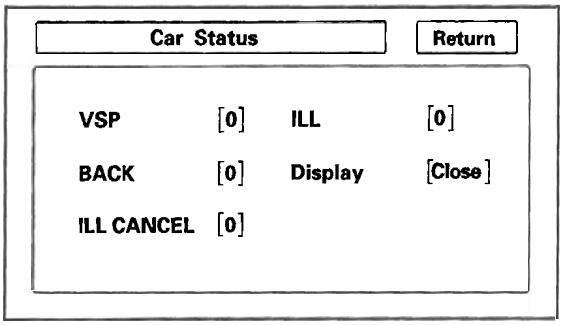

- VSP-Vehicle Speed Pulse from PCM connector A (Terminal 13 of navigation unit connector A, 17P)
  a) OFF (0) when vehicle is not moving
  b) ON (1) when vehicle is moving

The VSP comes from the PCM as a dedicated signal. Internally, the navigation unit compares the actual VP on the map against street data to adjust the pulse to speed scaling factor.

- BACK-Reverse indication from taillight relay (Terminal 7 of navigation unit connector C, 12P)
  a) OFF (0) when shift lever is in any position other than reverse
  b) ON (1) when shift lever is in reverse

The Back signal is used by the navigation unit to allow the map screen to show the VP moving backwards when in reverse and to trigger the optional rear view camera. This signal is needed because the Speed Pulse does not provide any directional information to the system.

- ILL CANCEL
  a) OFF (0) when the gauge assembly brightness control is less than 90 % brightness.
  b) ON (1) when the gauge assembly brightness knob is more than 90 % brightness.

(cont'd)

System Diagnostic Mode (cont'd)

- ILL-Illumination Indication
  (Terminal 10 of navigation unit connector A, 17P)
  a) OFF (0) when parking lights or headlights are off
  b) ON (1) when parking lights or headlights are on

This signal is used by the navigation unit to determine whether to put the navigation screen into the Day or Night brightness mode. (Setup screen 1)

- The "Display" function displays the position of the display.
  a) (Close) when the display is closed
  b) (Open) when the display is open

The navigation unit has a microswitch to detect this. If open is indicated when the display is closed, replace the navigation unit.

GPS Information

This screen shows the current status of GPS reception. The circular diagram shows the current location of the GPS satellites (yellow balls) as they would appear in the sky. The outer circle represents the horizon (0 degrees elevation). The middle and inner circles represents 30 and 60 degrees respectively. The very center of the diagram (90 degrees elevation) is directly overhead. Nearby obstructions, like tall buildings, will block satellites in that direction. That is why it is necessary to be in an open area to effectively troubleshoot GPS reception issues. The satellites shown on the diagram correspond to the "PRN" number in the "GPS Details" screen. There are always 24 "active" GPS satellites in orbit. Because satellites fail, and have to be removed from service, spares are always parked in orbit, ready to be activated. This is why the PRN (satellite ID number) can be greater than 24.

NOTE:

- To use this screen for troubleshooting, the vehicle should be outside, away from buildings, tall trees, and high-tension wires for at least 10 minutes with the engine running.
- Metallic window tinting on the front or side window or after-market electronic accessories mounted near the navigation unit, GPS antenna, or navigation display can interfere with GPS acquisition.
- The "Number of Satellites" box shows the number of acquired satellites (maximum of 12). It should contain 4 or more icons. If not, troubleshoot for "GPS icon is white" (see page 23-112).
- The "Current Position" shows latitude, longitude, and elevation (in meters). If there are less than four satellites, the elevation can be grossly inaccurate.
- The Date/Time field shows the current date, and also a time that includes daylight savings and other offsets entered by the customer in Setup function "Adjust Time Zone/Clock."

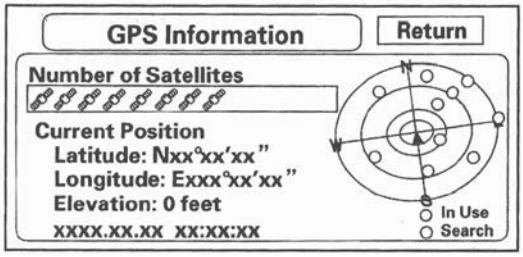

NOTE:
Push and hold the "Map/Guide" button, and the "dots" on the diagram are replaced with the "PRN" # (satellite numbers). These numbers correspond to the numbers in the "PRN" column on the "GPS details" screen.

GPS Detail

By pressing and holding the MENU button for 10 seconds, a GPS Detail screen appears. This screen displays real time incoming satellite positional data. Most of the information shown on this screen is for factory use, however some of the data can indicate partial GPS signal interference.

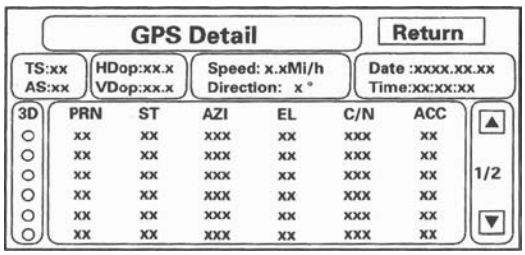

- The box TS/AS and HDop/VDop is for factory use.
- The Speed and Direction information is updated in real time when driving, and can be used to detect intermittent speed sensor problems.
- The Date/Time Information is the same as in Setup screen 2 "Adjust Time Zone/Clock".
- If the "3D" icon is shown above the yellow dots, this implies that at least four satellites are available for map positioning, and the "GPS" indicator on the map screen will be green. See the Global Positioning System detailed explanation in the "System Description" (see page 23-95).
- If the row of data in the table below begins with a "yellow dot", the AZI and EL fields can be used to locate each satellite "PRN" # on the circular GPS diagram (see prior screen).

(cont'd)

System Diagnostic Mode (cont'd)

NOTE: The data shown in the GPS Detail screen is an example only.

Column	Description	Problem indication
3D	Active satellites (Yellow Dot)	If "3D" is missing follow GPS icon is white or not shown (see page 23-112).
PRN	The satellite ID number	
ST	The status: 0 = cannot view or searching, 2 = acquiring	If all 0, then, follow GPS icon is white or not shown troubleshooting (see page 23-112).
AZI	Azimuth, the angle (0—360) clockwise from north	
EL	Elevation from the horizon (90 deg is overhead)	
C/N	N/A	Healthy signal is 49—52, no signal: 27—33
ACC	N/A	

Yaw Rate

This diagnostic checks the yaw rate sensor in the control unit. This device detects when the vehicle turns, and repositions the vehicle postion icon on the map screen. For more detailed information, see the yaw rate sensor theory of operation under "System Description" (see page 23-94).

- "Sensor" indicates the voltage output from the yaw rate sensor. It should indicate about 2.500 V when stopped.
- "Offset" is the reference voltage or standard within the yaw rate sensor. It also should indicate about 2.500 V when stopped.
- A "sensor" output voltage LOWER than the "Offset" voltage indicates that the vehicle is turning to the right.
  A "sensor" output voltage HIGHER than the "Offset" voltage indicates that the vehicle is turning to the left.
- The yaw rate offset and sensor should both indicate about 2.500 V when stopped. If either reads zero or 5.000 V, replace the navigation unit.
- The yaw rate offset and sensor should be within +/— 0.01 V of each other when stopped. The sensor value should change relative to the offset as the vehicle is turned while driving. If not, replace the navigation unit.

Example: Vehicle stopped

Normal		**Abnormal**	
Offset	2.526 V	Offset	2.526 V
Sensor	2.516—2.536 V	Sensor	2.623 V

Example: Vehicle turning

Normal		**Abnormal**	
Offset	2.526 V	Offset	2.526 V
Sensor	2.678 V (right turn) 2.478 V (left turn)	Sensor	2.623 V (no change on turns)

The settings "CCW Cal Factor", "CW Cal Factor", and "Set" are for factory use only. THIS SHOULD NEVER BE USED.

NOTE: Do not try to adjust the yaw rate sensor without instructions from the factory. See next paragraph for tuning.

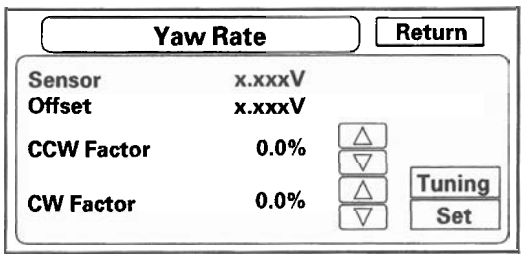

Yaw Rate Tuning

This diagnostic allows you to graphically display problems with the yaw rate sensor.

- The "ANG-Disp" value accumulates any differences between the "offset", and "sensor" voltages (see Yaw Rate diagnostic). When the sensor is functioning normally, the random changes in these two voltages generally cancels out, so the value is 0. However if one voltage is consistently higher than the other, then the "ANG-Disp" value accumulates the constant change.
- The "Reset" button temporarily clears the angular accumulation (ANG-Disp), and clears the diplay dots.
- Do not touch the "CCW" or "CW", or "Set" buttons. These are used for factory setup only.

For serious problems with the sensor, the stationary test usually confirms whether the sensor is defective. For yaw rate issues related to driving, perform the road test described below.

1. Stationary test: If the "VP" icon spins in place and the "ANG-Disp" value slowly increases or decreases in value, the yaw rate sensor is defective. Replace the Navigation unit.

2. Road test: Drive the vehicle on a very straight road. Enter the diagnostic mode, select "Yaw rate", and touch the "Tuning" button. While driving down a straight road, the white "dots" should trace a straight line across the screen. However, if you are driving on a straight road, and you notice the dots constantly dropping down or heading up as you drive, the navigation unit's yaw sensor is defective. You can touch "Reset" to clear "ANG-Disp", and dotted line.

3. If either test fails, please enter "Yaw rate sensor defective" for the problem description, on the "Navigation core return form".

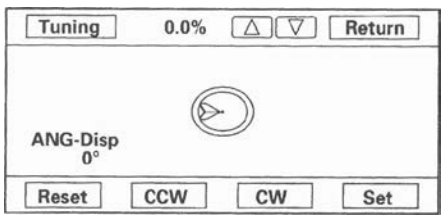

Tire Calibration

As the vehicle moves, the navigation system receives speed pulses from the PCM. These pulses are converted using a conversion factor to a mph speed that moves the vehicle position (VP) on the map. The navigation system has an internal tuning function that generates and refines this factor based on actual driving. The "Level" indicates the status of the tuning. At navigation initialization, it begins at 0, and increases to 10 as the navigation system is used.

- The "Auto Tuning" is factory set to "ON", and should remain on.
- The "Study" indicates the tuning status. If it is less than 10, the unit is still calibrating.
- The "Tire-Cal. Tuning" and "Set" should not be used. It is for factory use only.

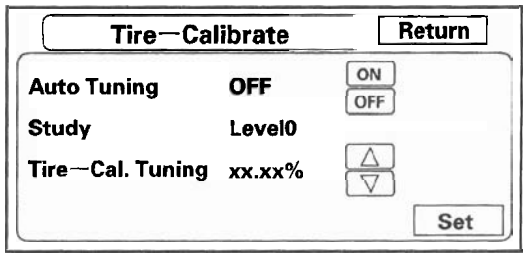

(cont'd)

System Diagnostic Mode (cont'd)

Functional Setup

Select the item you want to check.

- Log Data
- GPS Send Time
- Demo Mode
- Mic Level
- Solar Angle
- Save Users Memory

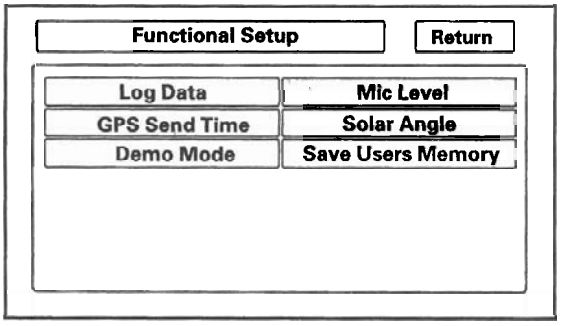

Log Data
This screen allows the factory to collect log data to troubleshoot navigation system issues.

- There is no card in the "PC Card Slot", the screen appears as:

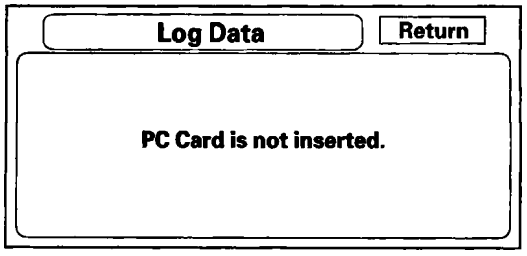

- However, if the factory provides a PC card, insert it into the card slot (label side up). Follow the factory logging VD data procedure for gathering test data and properly ending the test.

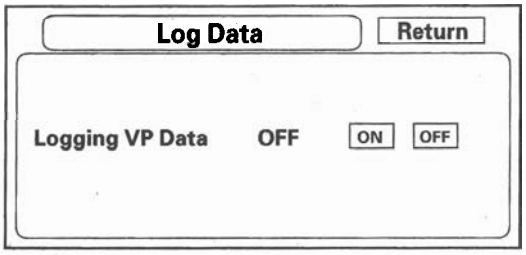

GPS Send Time
This screen is for factory use only. It allows adjustment of the GPS time. This display updates in real time.

- "GPS Time" is the time as received from the GPS satellites. It is in Greenwich Mean Time (GMT).
- Date, Hour, Minute, and "Set" should not be used.

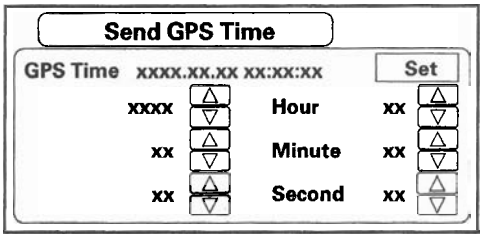

Demo Mode
This screen allows the navigation system to "drive" a route, when the vehicle is stationary. Typical applications include auto shows, and other events. This feature allows a visitor to enter a destination, and see the system "drive" to the destination. No speed signal is needed.

- To initiate the mode select "ON".
- Changing the "speed rate" in ms (milliseconds) is optional, and represents the time between updates of the VP (vehicle position) movement.
  - When you increase the rate, the VP slows down because it is updated (moved) at a slower rate.
  - When you decrease the rate, VP is faster because it is updated (moved) more frequently.
  - 1500 ms is VP at its slowest in demo mode.
  - 150 ms is VP at its fastest in demo mode (Default).
- When you turn the key off, the setting automatically returns to the default of "Off".

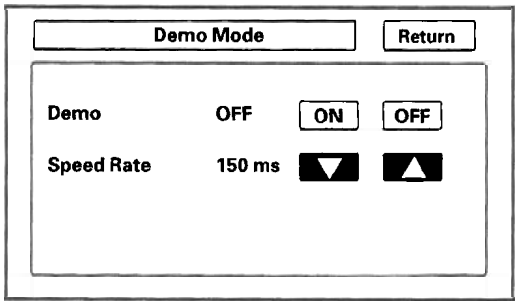

Mic Level
This diagnostic screen allows you to independently test the microphone and the TALK and BACK buttons. They are used to activate the voice control system. The microphone is located near the map light in the ceiling. It is directional, and works best if the voice is coming from the drivers seat.

- Press the TALK button on the steering wheel, and in a normal voice say "testing". The TALK indicator on the screen should momentarily turn green, and the text "Now Recording..." should appear in yellow. If the Mic Level indicator on the screen does not briefly turn green, then check the wiring from the TALK button to the navigation unit. If there is no "Mic Level" movement when you speak, or if all the bars are filled without speaking, then you should check the wires running from the microphone to the control unit for opens or shorts. If the wires are OK, substitute a known good microphone and recheck.
- If all the bars are filled without speaking or with very little background noise, disconnect the microphone for 1 hour, then reconnect it and recheck. If the symptom is resolved, the microphone had a glitch and is now reset.
- Press the BACK button on the steering wheel. The Cancel indicator on the screen should momentarily turn green. If it does not briefly turn green, then check the wiring from the steering wheel BACK button to the navigation unit.

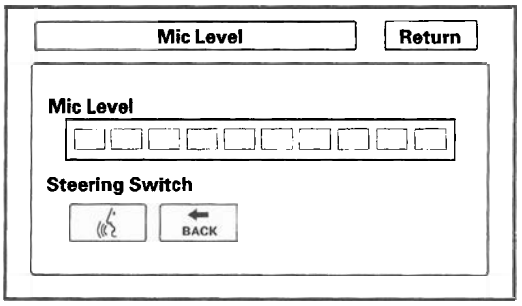

NOTE:
If the radio is off, and there is movement in the indicator-even without speaking, then ensure that the vents are not blowing on the microphone.
This should resolve voice control complaints such as:

- Sometimes the system does not understand my commands.
- I have to shout at the navi for a command to be recognized.
- The system just says "pardon".

(cont'd)

System Diagnostic Mode (cont'd)

Solar Angle

This screen graphically displays the sun's position as determined by GPS.

This screen is for factory use only.

- The "manual tuning" button should always be OFF.
- The "Angle" is the angle that the sun (shown with a red dot) is above the horizon.
- The "vehicle" value represents the angle, clockwise from North, to the direction that the vehicle position (VP) icon is pointing (always points straight up).
- The "direction" value is the angle, measured clockwise from the VP (straight up) to the suns position.
- The reliability ranges from 1 to 3, and represents the accuracy of the Vehicle Position relative to the sun.

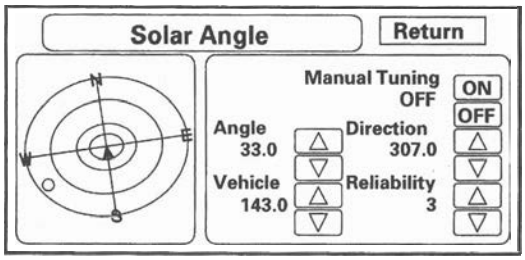

Version

This screen displays the current version of the program, and allows the loading of a new version of the program either from a CD/DVD or from a PC card.

The Program Flash version should always be greater than or equal to the Program Disc version. IPL, APL, DBOOT, and System uCom are for factory use only.

The Model code is SWA, and is for factory use only. This code is stored on a chip in the navigation unit. Therefore, every model has a unique part number for the navigation unit.

NOTE: If any model number other than SWA is displayed, replace the navigation unit with the correct part. The model code tells the navigation unit what software to load off the DVD.

Do not use Download unless instructed to do so by the factory.

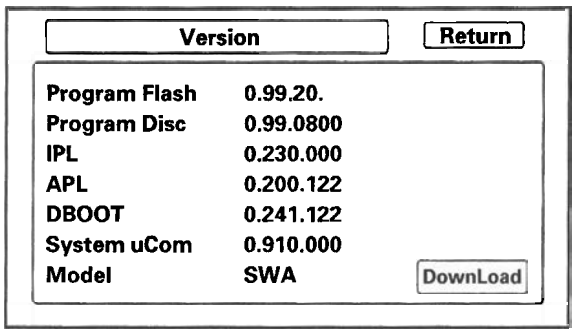

Save Users Memory

When replacing the navigation unit, this function allows the dealer to transfer the customer's personal data to the new navigation unit.

This is similar to saving and entering the customer's audio presets when replacing an audio core. The transferred information includes their Setup settings, and personal addresses. The dealer inserts a PC card (like the PC card in the HDS), and then selects the "Save Users Memory" function. The two functions in this diagnostic screen are Export and Import. Export saves the customer's data to the PC card, and Import moves the PC card files to the new core.

See the FAQs below for information regarding PC cards, and the use of this function.

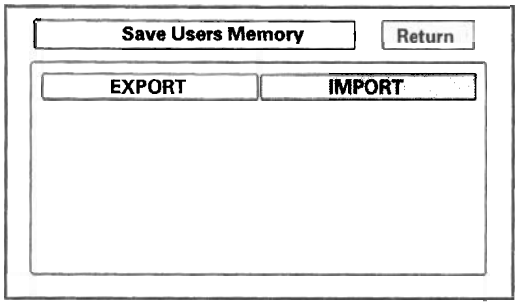

Export
Select this button to move the customer's data from the original navi ECU to the PC card. Select "YES" on the "Export User Data" Confirmation screen. The process takes only a couple of seconds. The system stores two small files on the card.

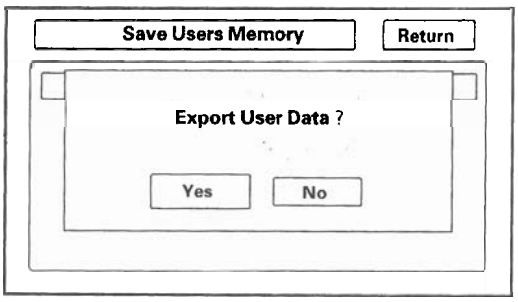

Import
After installing the customer's original DVD in the new core, allow the system to boot up. Insert the PC card in the new core and enter the navigation diagnostic mode.

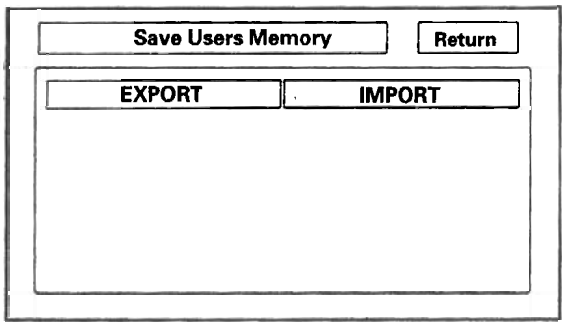

Select "YES" on the "Import Confirmation" screen.

Import moves the two files stored by the Export process from the PC card to the new navi ECU. When the transfer is finished (a few seconds) the system will automatically reboot. After the system reboots, remove the PC card from the PC slot.

If the Import button is grayed out, follow the troubleshooting in the FAQs below. The customer's files can only be transferred to a new core if the "Model" and the "Program Flash" shown on the "Version" screen are the same. So files cannot be transferred from Civic to Accord, or from a Civic with version 1.07.00 to a Civic with version 1.32.00.

(cont'd)

System Diagnostic Mode (cont'd)

PC Card FAQs

Question	Answer
Where do we buy the flash memory or adaptors, and what do we ask for?	You need a "PCMCIA type II" adaptor and a flash memory chip (see for memory chip types). They can be purchased at a computer or office supply store. The card will have the same size and shape as the PC card in the HDS. Adapters that accept multiple flash types are not recommended.
What memory flash chips will work with what adaptors?	The flash memory devices that have been tested include Compact Flash (CF), and ATA style (like the card in the HDS). Other card types and flash memory chips may work, but have not been tested.
What capacity card do I need for this function?	A memory chip with capacity of 64 MB to 2 GB will work. The two files moved to the card during "export" are less than a Megabyte in size. An adapter and flash memory can be obtained for less than 50 dollars.
Should the dealer have a dedicated card for the Export and Import navigation function?	Yes, treat the card as a dedicated "special tool" that should be used anytime your 07 or later customer needs their navi personal files transferred to a new ECU core.
What device can I use to maintain the card, and delete files?	Any computer store sells USB style PC card readers that accept the card, and allow you to do file maintenance on your card. Most laptops will also accept the card.
Can we move the customer's data to different models (like moving Civic navi data to a Pilot)?	No, the files are model specific and will only load into a navi ECU with the same part number.
Can we move the customer's data to the same vehicle with a different software version (Like moving version 4.51)?	The customer's files can only be transferred to a new core, if the "Model" and the "Program Flash" shown on the "Version" screen are the same. Files cannot be transferred between models with different model codes.
The "Export" button is "grayed out" Why?	• A PC card with its media memory chip is not inserted properly. • Check the card's edge connector, and the pins inside the navigation unit (with a flashlight) for damage.
The "Import" button is "grayed out". Why is this?	• A PC card with it's media memory chip is not inserted. • The model code of the files stored during export do not match the model code of the new navi ECU. • The version of the files from the original navi ECU are not the same as the version in the new ECU.
Will other files on the card like images or music files prevent the Export/ Import function from working?	No, the system simply adds two small files that are recognized by the new core when performing the Import function. However, if the card is full, the "Export" function won't work correctly.
Do I have to delete the files on the card after each transfer of the customer's data?	After the transfer of customer data to the new core, the files remain on the card. Since this is confidential information, we recommend that you delete these files after each use. Please note that each time you export navi files of the same model and version, the files are overwritten. Over time the card will accumulate two files for each version of the eight or so Honda navi models.
What format should be used if the card needs reformatting?	It is unlikely that the card will ever need formatting, however the FAT file system should be used.
I can't enter the navi diagnostic mode to do the Export/Import function. How can I transfer the customer's data?	Some internal navi ECU failures may make it impossible to use the Export/Import function.

Question	Answer
Why wont the Export or Import functions work? What do I check as part of troubleshooting?	• The card may not be fully inserted into the slot. Eject the card, and inspect for warping or damage to the edge connector. Never use excessive force to insert a card. This can result in damage to the pins in the rear of the slot. • The card may not contain files that are recognized by the new core. Navi data can only be transferred between cores with the same "Model code", and with the same navi "Program flash" version. • The flash memory chip type may not be accepted by the system. Only Compact Flash, and ATA cards have been tested. • The card's PCMCIA adapter may be preventing a known good card from playing. Avoid multi slot type PCMCIA adapters that accept several different flash memory types. • The card may be full and as a result the files are stored, but without any data. Export and import appear to function, but move nothing. Delete unused files from the card. • There may not be any files on the card. If the card has a "write protection" switch, make sure it is turned off before attempting to use the Export function. • Although flash memory chips are reliable, occasionally they develop bad sectors or other formatting errors that prevents them from accepting files. The card should be reformatted using the FAT format. • The card may have been formatted using the NTFS format. Only the FAT format is accepted by the system. • Hard disc drive (HDD) cards may not work properly in the system and can overheat or quit functioning, particularly in a hot vehicle. They are not recommended. • Before performing the Import function, ensure that the customer's original DVD is loaded into the new core and working properly.
Are there any error messages to tell me what is wrong?	There are no error messages associated with the Import/Export feature. Follow the troubleshooting steps.

(cont'd)

System Diagnostic Mode (cont'd)

Error Message Table

Screen Error Message	Solution
Navigation system is unable to acquire a proper GPS signal.	Make sure there is nothing on the dashboard blocking the GPS antenna. If not, move the vehicle to an open space away from tall buildings, trees, etc. Aftermarket devices can affect the GPS reception.
Navigation is open or No DVD disc installed. Please check system.	Make sure the correct turquoise (blue/green)-labeled navigation DVD is installed with the label side up and the navigation display is closed.
DVD reading error (incorrect DVD disc) place consult your dealer.	Verify correct color (turquoise) DVD installed.
Display temp is too high. System will shut down until display cools down.	This message will appear briefly when the display temperature is too high, and the display will turn off until the temperature cools down. The system will turn back on when the display cools down.
Outside temperature is low, system will take a while to start up.	The temperature is below −30 ℃ and the navigation control unit has difficulties reading the DVD. The system will start up when the temperature warms up.
DVD disc reading error (unformatted), please consult your dealer.	Check the DVD source for deep scratches or other damage. Make sure you are using an official Honda navigation DVD (turquoise in color). The system cannot read other mapping databases or video DVDs. If the problem persists, see your dealer.
Route has not been completed. Please try again from a different location.	Routing to or from a place (new area) that is not in or linked to the database. Try planning a different route to or from a different location.
No alternate route found. Original route will be guided.	No alternate route method was found. The original route will be used.
This destination cannot be found in database.	The destination was not found in the database. Try another destination nearby, or select the destination with the joystick.

CD, DVD, and PC Card Removal/Installation

If the display will not open, use this procedure to manually open the display and remove the CD, DVD, and/or the PC card.

1. Remove the navigation unit from the vehicle (see page 23-140).

2. On the bench, carefully pull the display (A) straight out (about 1/2 inch).

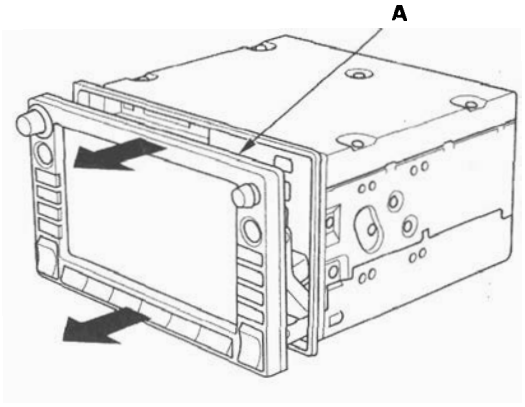

3. Fold down the display as shown in the diagram below.

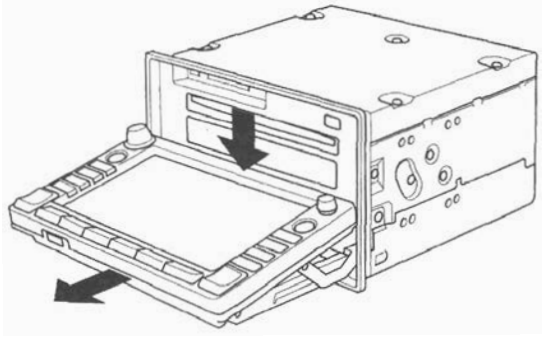

4. Push the PC card eject button (A) to eject the customer's PC card (if installed). Power is not required for this function.

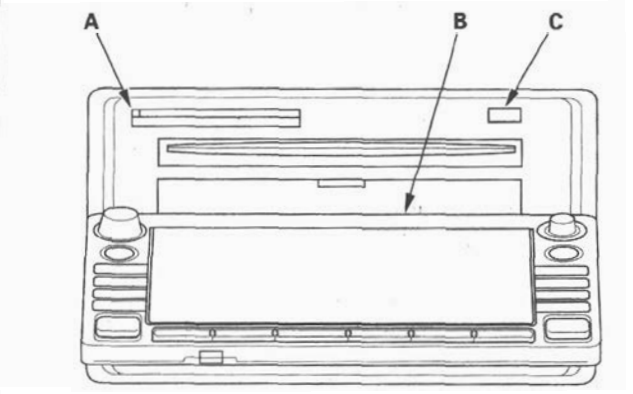

5. Open the plastic cover (B) for the navigation DVD slot. Do not remove the plastic cover.

6. With the display open, temporarily reconnect the unit in the dash (to power it up).

7. Push the CD "eject" button (C), and navigation DVD "eject" button and remove the discs (holding both discs by their edges to avoid fingerprints). To avoid scratches, place the navigation DVD, and customer's CD in a jewel case if available.

8. Close the plastic cover that covers the navigation DVD slot.

9. Close the display by first returning the display to the upward position, and then pushing the entire display straight back into the unit.

10. After installing the new navigation unit, re-insert the navigation DVD, the customer's CD, and PC card.

Navigation Unit Removal/Installation

SRS components are located in this area. Review the SRS component location (see page 24-13).
Also review the precautions and procedures (see page 24-15) in the SRS section before doing repairs or service.

NOTE:
- Put on gloves to protect your hands.
- Take care not to scratch the dashboard and related parts.
- Lay a workshop towel under the parts when working on them to protect the face panel from scratches or other damage.
- Do not work in a dusty or dirty place.
- Discharge static electricity from your body before and during the work.
- Do not touch the circuit board(s) with your bare hands.
- Do not work with dirty hands.
- Be careful not to fold the flat plate cable.
- Do not touch the terminal connector of the flat plate cable with your bare hands. (If you have touched it, wipe it off thoroughly.)
- Before replacing the navigation unit, make sure to remove the customer's navigation DVD, and their audio CD, or PC card. Remanufactured navigation units do not come with a navigation DVD. Re-install the customer's navigation DVD, audio CD, and audio PC card into the new remanufactured unit. If the navigation display won't open, manually remove the navigation DVD, audio CD, and PC card (see page 23-139).

1. Make sure you have the 4-digit anti-theft code for the navigation system, then write down the XM radio presets.

2. Remove the center vent (see page 20-93) and HVAC control unit (see page 21-53)

3. Remove the navigation unit mounting bolts (A).

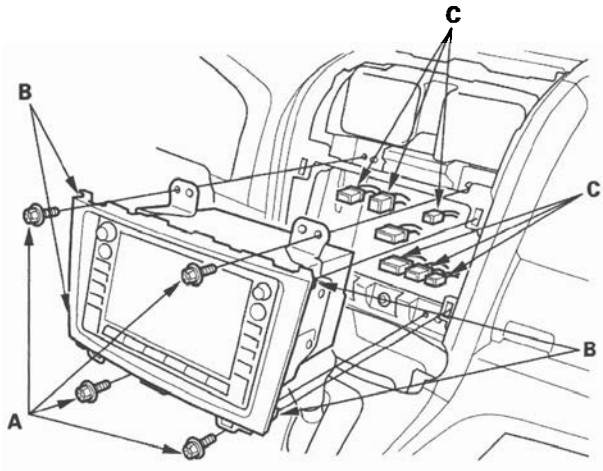

4. Pull the navigation unit away from the dashboard to release the locking clips (B), then disconnect the connectors (C).

5. Remove the bolts, screws, and the brackets (A), then remove the center panel (B).

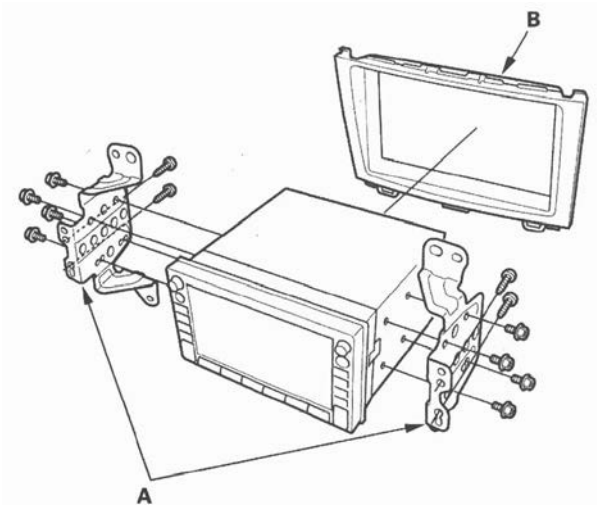

6. Install the navigation unit in the reverse order of removal, and note these items:

   - Make sure all connectors and the antenna lead are secure.
   - Enter the anti-theft code for the navigation unit, then enter the XM radio presets.

Voice Control Switch Test

1. Remove the voice control switch (see page 23-141).

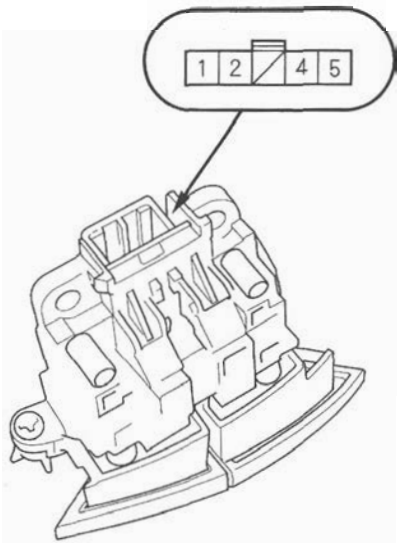

2. Measure the resistance between the No. 2 and No. 3 terminals in each switch position according to the table.

Position	Resistance
OFF	About 10 kΩ
TALK	About 2.9 kΩ
BACK	About 700 Ω

3. If the resistance is not as specified, replace the voice control switch (see page 23-141).

4. Use a diode tester between the terminals in each switch position according to the table.

Terminal	1		5
	○	⊳	○

5. If the diode test is bad, replace the switch (see page 23-141).

Voice Control Switch Replacement

1. Remove the steering wheel (see page 17-22).
2. Remove the voice control switch (see page 17-23).
3. Install the voice control switch in the reverse order of removal.

Microphone Replacement

1. Remove the front individual map light lens (A).

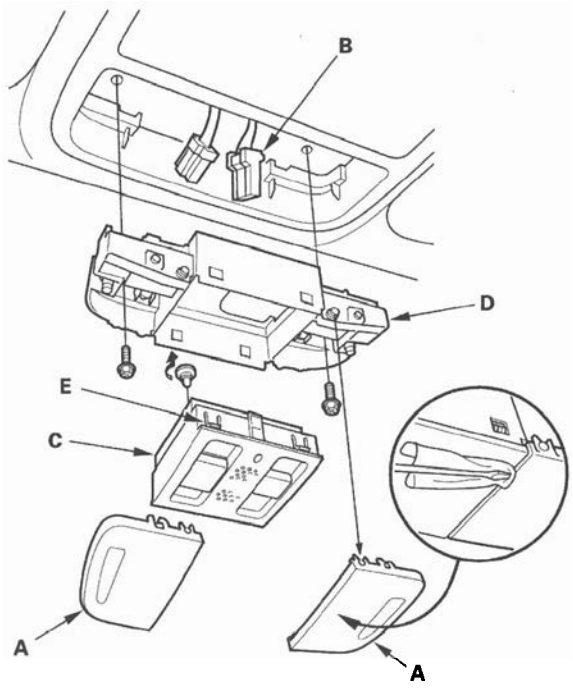

2. Disconnect the 3P connector (B) from the microphone.
3. Carefully pry off the microphone (C) from the map light housing (D) while pressing in on the retaining tabs (E).
4. Install the microphone in the reverse order removal.

Rearview Camera Removal/ Installation

1. Remove the tailgate lower trim panel (see page 20-78).
2. Disconnect the connector (A) from the rearview camera (B), then remove the wire harness clip (C).

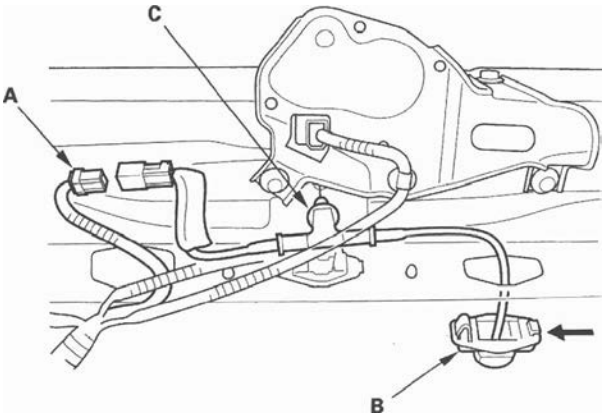

3. Remove the rearview camera.
4. Install the rearview camera in the reverse order of removal.

GPS Antenna Removal/Installation

1. Remove the navigation unit (see page 23-140).
2. Remove the center upper lid (see page 20-97).
3. Remove the wire harness clips (A), screws and GPS antenna (B).

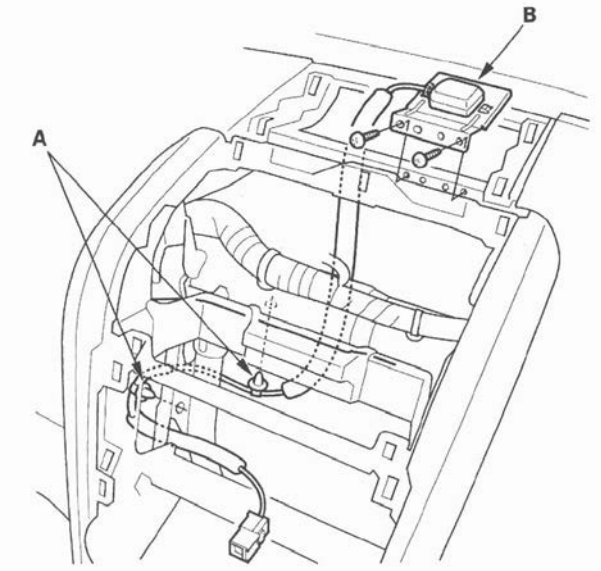

4. Install the antenna in the reverse order of removal.

Restraints

Restraints

Special Tools 24-2

Seat Belts

Component Location Index 24-3
Front Seat Belt Replacement 24-4
Rear Seat Belt Replacement 24-7
Inspection 24-11

SRS (Supplemental Restraint System)

Component Location Index 24-13
Precautions and Procedures 24-15
General Troubleshooting Information 24-25
ODS Unit Initialization 24-28
ODS Unit Calibration 24-29
ODS Unit Operation Check 24-30
Driver's Seat Position Sensor Operation Check 24-31
DTC Troubleshooting Index 24-32
Symptom Troubleshooting Index 24-38
System Description 24-39
Circuit Diagram 24-44
DTC Troubleshooting 24-48
Symptom Troubleshooting 24-155
Component Replacement/Inspection After Deployment 24-158
Driver's Airbag Replacement 24-161
Front Passenger's Airbag Replacement 24-162
Side Airbag Replacement 24-164
Side Curtain Airbag Replacement 24-165
Airbag and Tensioner Disposal 24-169
Cable Reel Replacement 24-173
SRS Unit Replacement 24-176
Side Impact Sensor (First) Replacement 24-177
Side Impact Sensor (Second) Replacement 24-178
Front Passenger's Weight Sensor Replacement 24-179
ODS Unit Replacement 24-181
Front Impact Sensor Replacement 24-182
Driver's Seat Position Sensor Replacement 24-183
Passenger's Airbag Cutoff Indicator Illumination Bulb Test 24-184



Special Tools

Ref. No.	Tool Number	Description	Qty
①	07HAZ-SG00500	Deployment Tool	1
②	07SAZ-TB4011A	SRS Inflator Simulator	1
③	070AZ-SNAA100	SRS Simulator Lead J	1
④*	07TAZ-001020A	Backprobe Adapter, 17 mm	2
⑤	070AZ-SNAA200	SRS Simulator Lead K	1
⑥	070AZ-SNAA300	SRS Simulator Lead L	1
⑦	070AZ-SAA0100	SRS Short Canceller	2
⑧	07PAZ-001010A	SCS Service Connector	1

* : Use with the stacking patch cords from T/N 07SAZ-001000A, Backprobe Set.

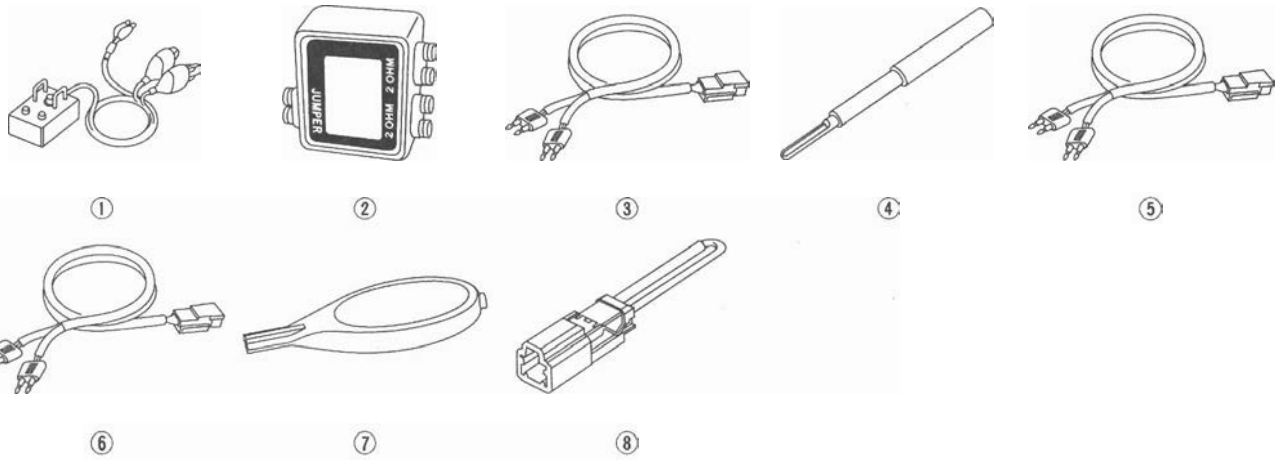

① ② ③ ④ ⑤

⑥ ⑦ ⑧

Component Location Index

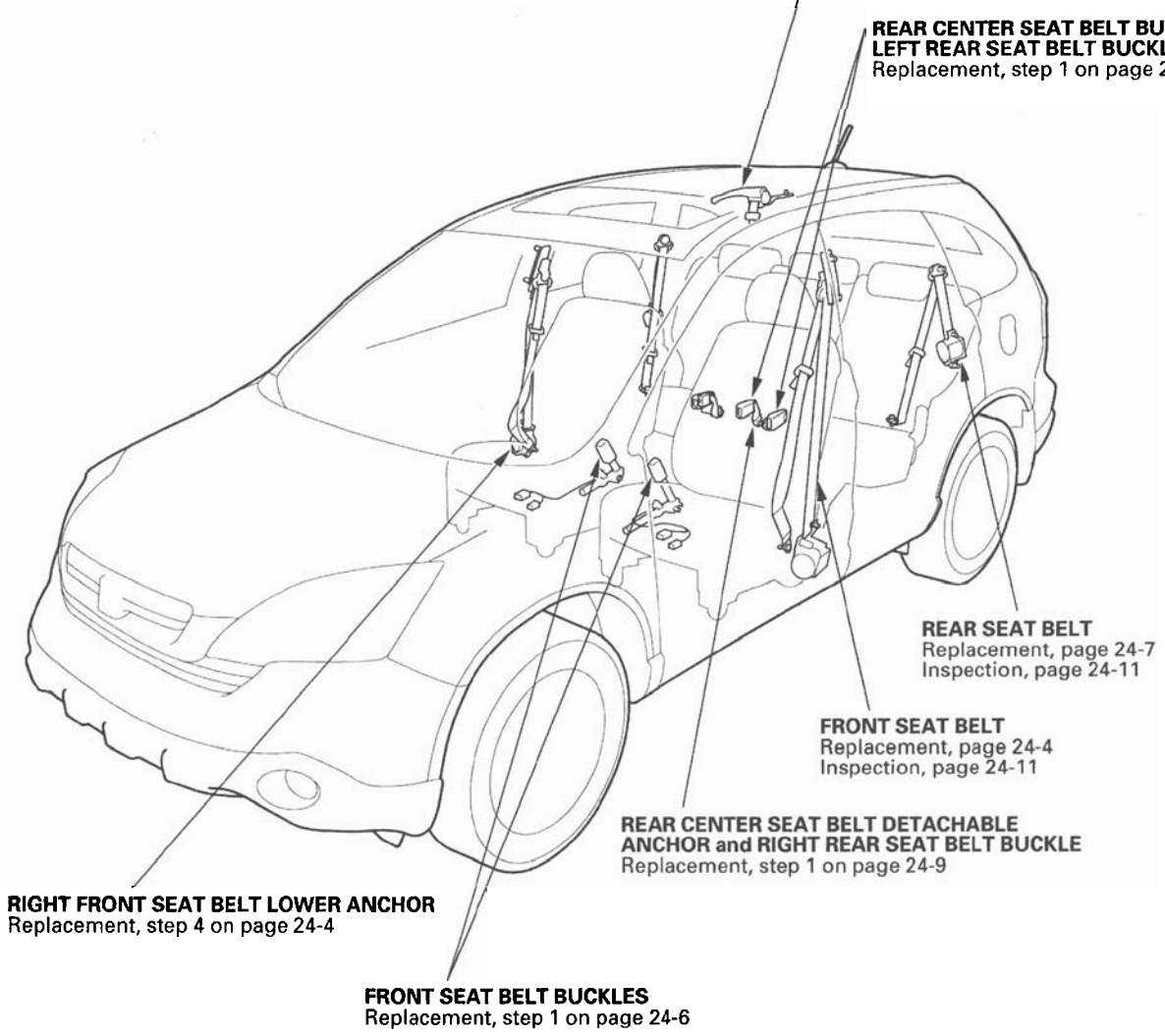

Front Seat Belt Replacement

Special Tools Required
KTC trim tool set SOJATP2014 *
* Available through the American Honda Tool and Equipment Program; call 888-424-6857

SRS components are located in this area. Review the SRS component locations (see page 24-13) and the precautions and procedures (see page 24-15) before doing repairs or service.

NOTE:
- Use the appropriate tool from the KTC trim tool set to avoid damage when prying components.
- Take care not to tear the seams or damage the seat covers.
- Put on gloves to protect your hands. Check the front seat belts for damage (see page 24-11), and replace them if necessary. Be careful not to damage them during removal and installation.

Front Seat Belt

1. Make sure you have the anti-theft code for the audio and navigation system (if equipped), then write down the XM audio presets (if equipped).

2. Disconnect the negative cable from the battery, and wait at least 3 minutes before beginning work.

3. Slide the front seat forward fully.

4. Carefully pry up on the bottom edge of the anchor cover (A) to release the hooks, and remove the cover.

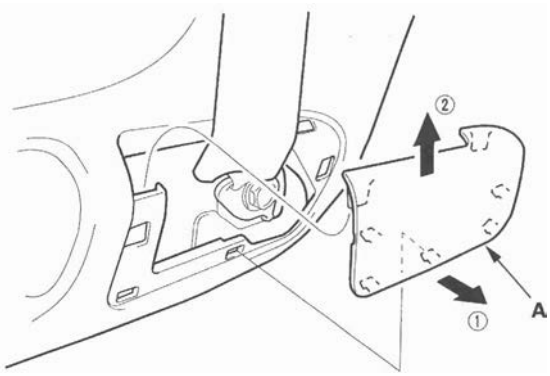

5. Remove the lower anchor bolt (A).

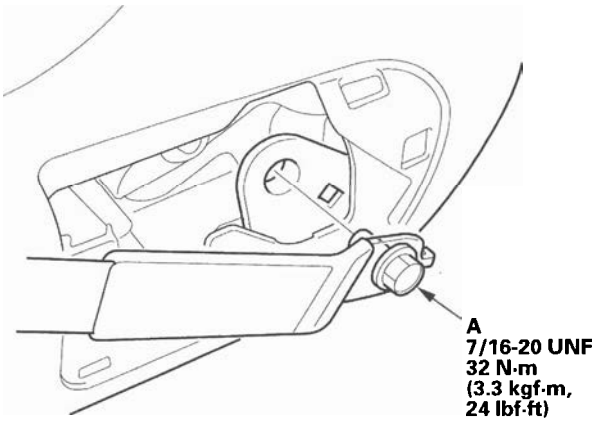

6. Remove the B-pillar lower trim panel (see page 20-72).

7. Remove the upper anchor cover (A), and remove the upper anchor bolt (B).

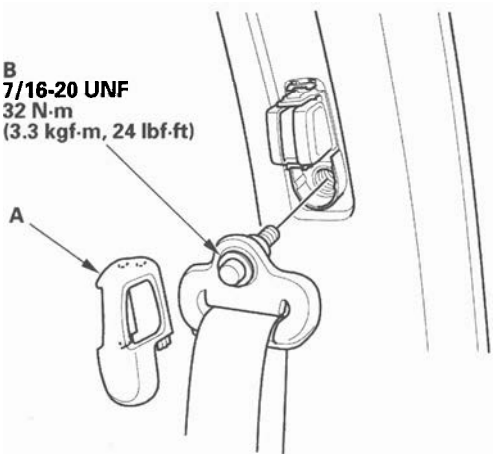

8. Disconnect the seat belt tensioner connector (A) from the retractor (B). Remove the upper retractor mounting bolt (C) and the lower retractor bolt (D), then remove the front seat belt (E) and retractor.

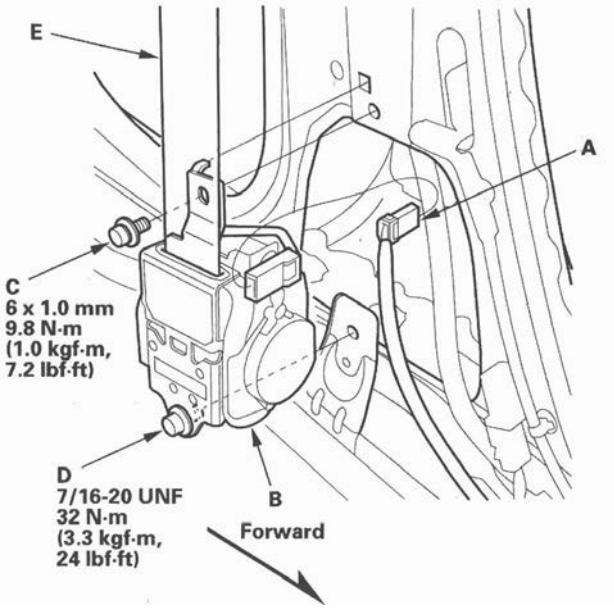

9. Remove the B-pillar upper trim (see step 4 on page 20-73).

10. Remove the shoulder anchor adjuster (A).

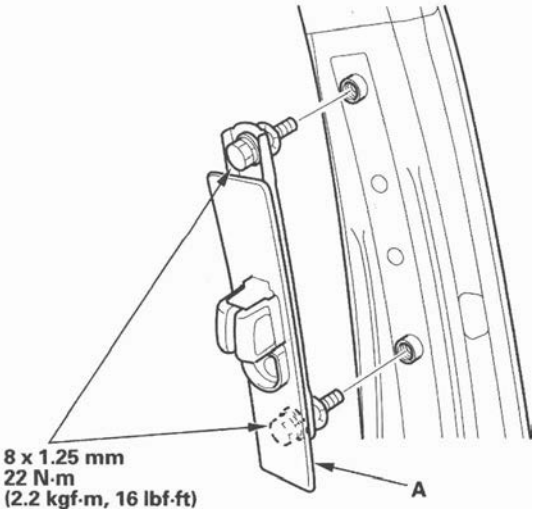

11. Install the seat belt in the reverse order of removal, and note these items:

- Apply liquid thread lock to the anchor bolts before reinstallation.
- Tighten the bolts by hand first, then tighten to the specified torque.
- Check that the retractor locking mechanism functions (see page 24-11).
- Assemble the washers, collar, and bushing on the upper and lower anchor bolts as shown.
- If the seat belt tensioner has been deployed, replace the B-pillar lower seal with a new one.
- Before installing the anchor bolts, make sure there are no twists or kinks in the seat belt.
- Make sure the seat belt tensioner connector and the seat belt buckle tensioner connector are plugged in properly.
- Reconnect the negative cable to the battery.
- Enter the anti-theft codes for the audio and navigation system (if equipped), then enter the XM audio presets (if equipped).
- Set the clock (without navigation system). Check for any DTCs that may have been set during repairs, and clear them.

Upper anchor bolt installation

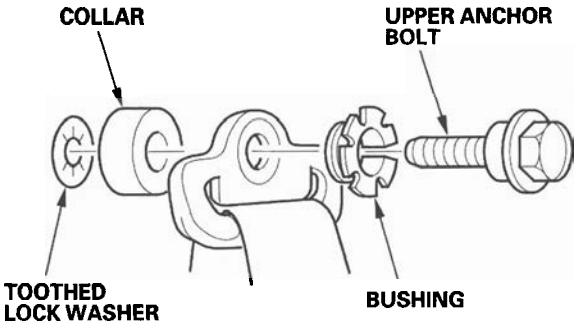

(cont'd)

Front Seat Belt Replacement (cont'd)

Lower anchor bolt installation

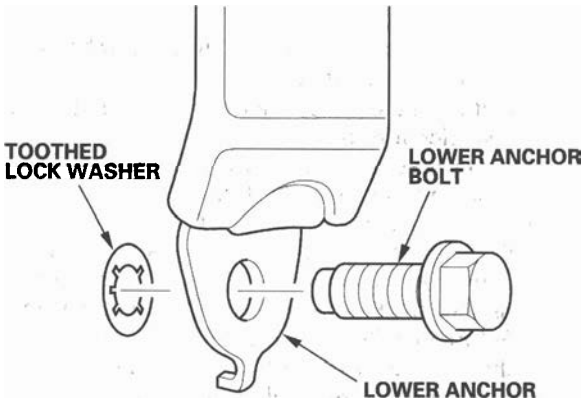

Seat Belt Buckle

1. Make sure you have the anti-theft code for the audio and navigation system (if equipped), then write down the XM audio presets (if equipped).
2. Disconnect the negative cable from the battery, and wait at least 3 minutes before beginning work.
3. Remove the front seat (see page 20-118).
4. Passenger's seat for some models: Remove the center table (see page 20-120).
5. Remove the recline inner cover (see step 5 on page 20-130).
6. Disconnect the seat subharness connector (A). Detach the seat belt buckle tensioner connector (B) and harness clip (C).

Driver's seat

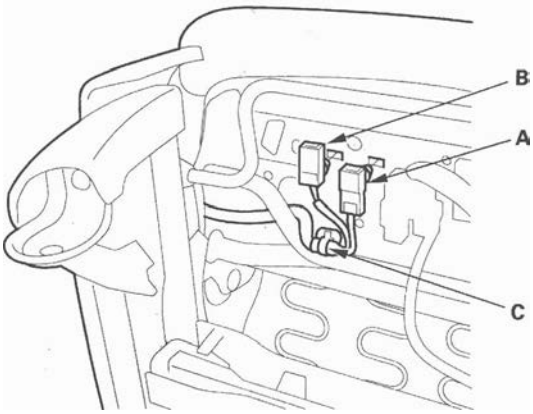

Passenger's seat

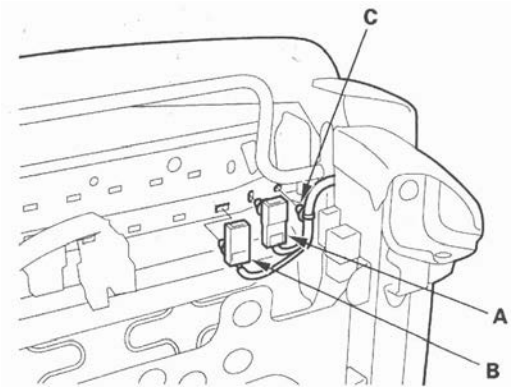

7. Remove the center anchor bolt (A), and remove the seat belt buckle (B).

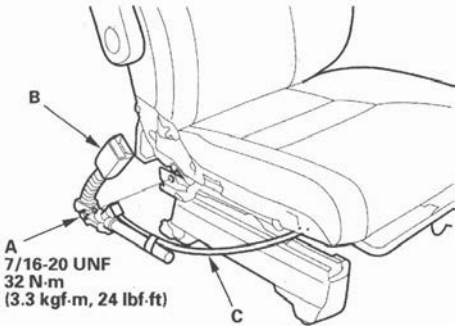

8. Pull the seat belt switch/tensioner harness (C) out through the space between the seat cushion and the seat linkage (driver's seat), or the hole in the seat track (passenger's seat).

9. Install the buckle in the reverse order of removal, and note these items:

   - Assemble the washers on the center anchor bolt as shown.
   - Apply liquid thread lock to the anchor bolt before reinstallation.
   - Tighten the bolt by hand first, then tighten to the specification with a torque wrench.
   - Apply liquid thread lock to the seat mounting bolts before reinstallation.
   - Reconnect the negative cable to the battery.
   - Enter the anti-theft codes for the audio and navigation system (if equipped), then enter the XM audio presets (if equipped).
   - Set the clock (without navigation system).
   - Check for any DTCs that may have been set during repairs, and clear them.
   - Do the power window control unit reset procedure (see page 22-189).

Center anchor bolt installation

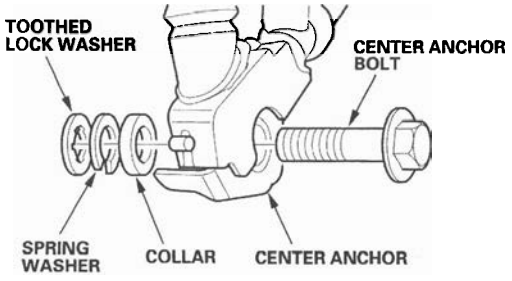

Rear Seat Belt Replacement

NOTE: Check the rear seat belts for damage, and replace them if necessary. Be careful not to damage them during removal and installation.

Rear Seat Belt

1. Fold the rear seat up.

2. Remove the cargo area side trim panel (see page 20-75).

3. Pull the carpet back as necessary, and remove the lower anchor bolt (A).

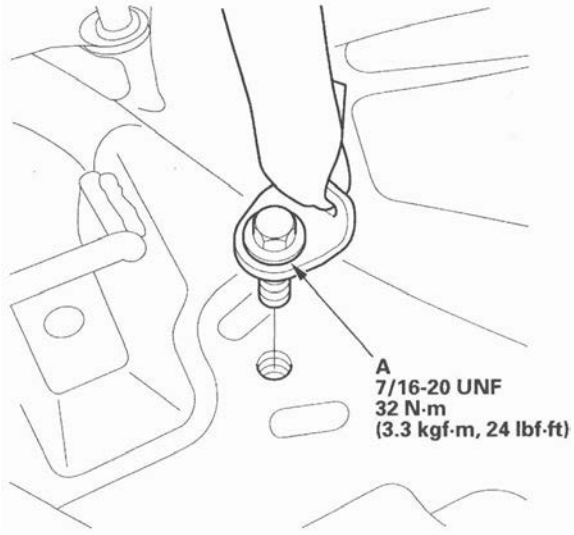

(cont'd)

Rear Seat Belt Replacement (cont'd)

4. Remove the upper anchor cap (A), and remove the upper anchor bolt (B).

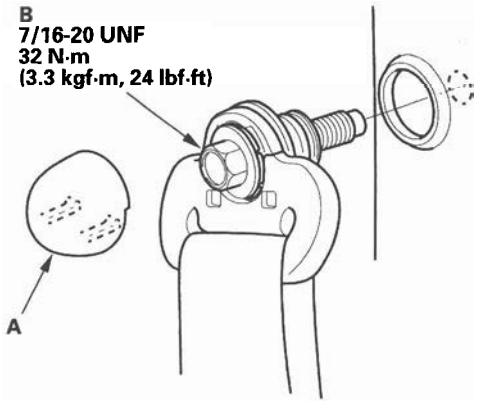

5. Remove the retractor mounting self-tapping screw (A), and the retractor bolt (B), then remove the rear seat belt (C) and retractor (D).

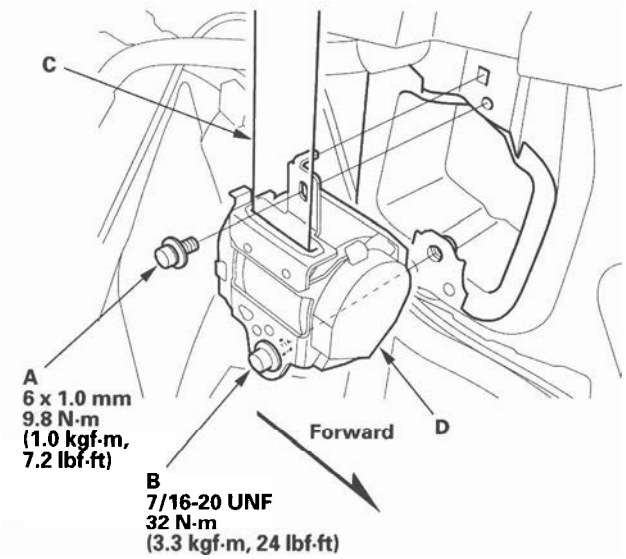

6. Install the seat belt in the reverse order of removal, and note these items:

- Assemble the washers, collar, and bushing on the upper anchor bolt as shown.
- Check that the retractor locking mechanism functions as described (see page 24-11).
- Apply liquid thread lock to the anchor bolts before reinstallation.
- Tighten the bolts by hand first, then tighten to the specified torque.
- Before installing the anchor bolts, make sure there are no twists or kinks in the seat belt.

Upper anchor bolt installation

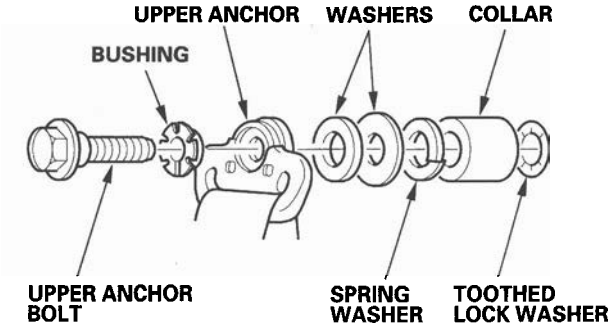

Rear Center Seat Belt

NOTE: Take care not to tear the seams or damage the headliner.

1. Remove the cap (A) from the retractor cover (B).

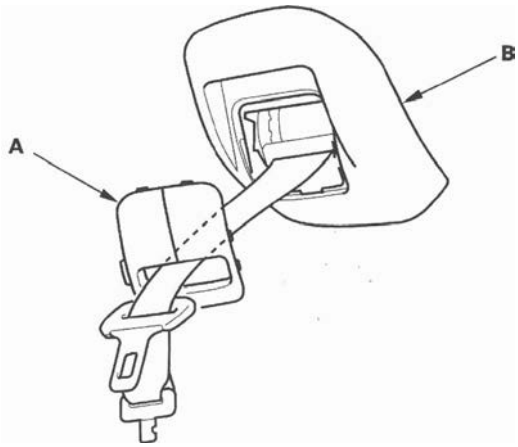

2. Remove the headliner (see page 20-83).

3. Remove the retractor mounting bolt (A) and retractor anchor bolts (B), then remove the center seat belt (C) and retractor (D).

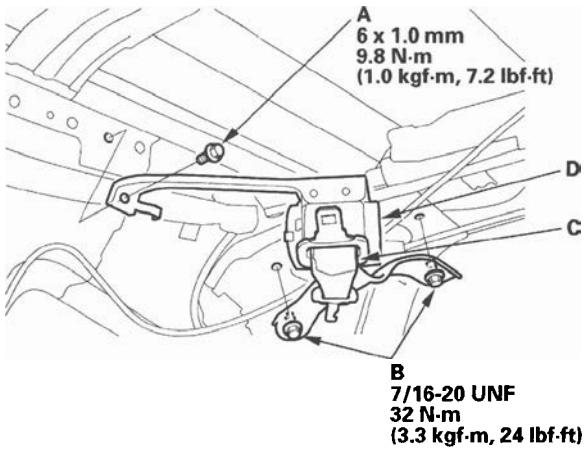

4. If necessary, replace the retractor cover (see step 9 on page 20-85).

5. Install the center seat belt and retractor in the reverse order of removal, and note these items:

   - Check that the retractor locking mechanism functions (see page 24-11).
   - Apply liquid thread lock to the retractor anchor bolt before reinstallation.

Rear Center Seat Belt Detachable Anchor and Right Rear Seat Belt Buckle

1. Remove the rear seat (see page 20-135).

2. Remove the undercover from the rear seat (see page 20-139).

3. Remove the center anchor bolts (A) from under the seat cushion.

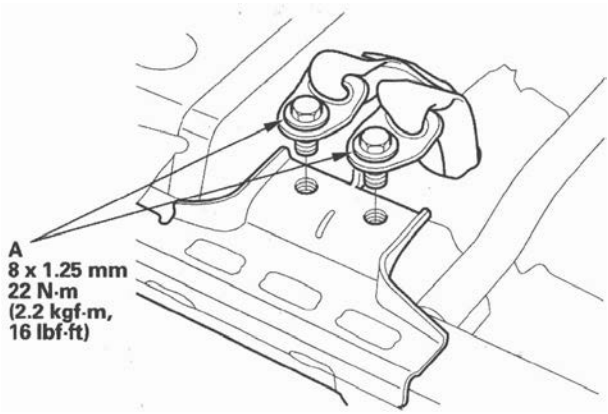

4. Pull the rear center seat belt detachable anchor (A) and right rear seat belt buckle (B) out.

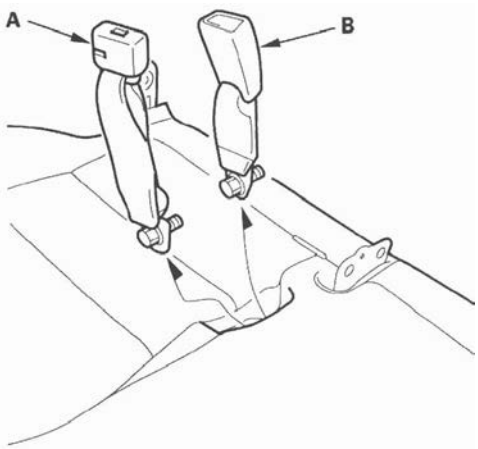

(cont'd)

Rear Seat Belt Replacement (cont'd)

5. Install the anchor and buckle in the reverse order of removal, and note these items:

   - Assemble the washer on the center anchor bolt as shown.
   - Apply liquid thread lock to the anchor bolts before reinstallation.
   - Make sure there are no twists or kinks in the anchor, center belt, and seat belt buckle.

Center anchor bolt installation

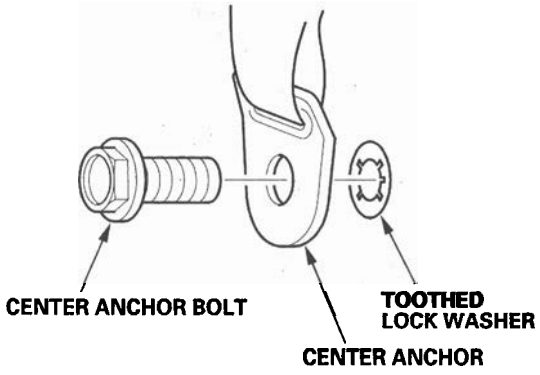

Rear Center Seat Belt Buckle and Left Rear Seat Belt Buckle

1. Fold the rear seat up (one side).
2. Remove the outer cover, right rear seat (see page 20-139), left rear seat (see page 20-145).
3. Remove the center anchor bolt (A).

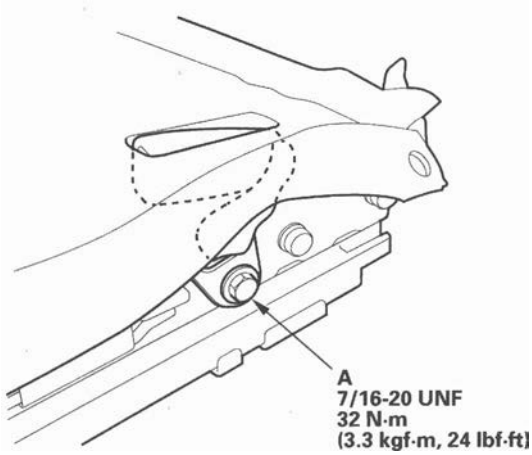

4. Pull the rear center seat belt buckle (A) (right rear seat) or left rear seat belt buckle (left rear seat) out.

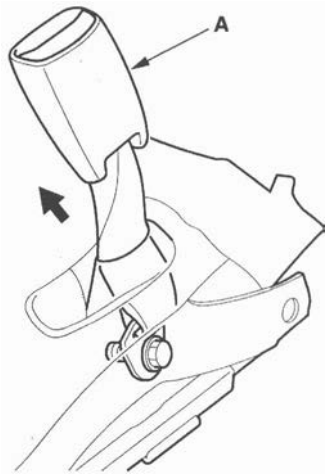

5. Install the buckle in the reverse order of removal, and note these items:

   - Assemble the collar and washer on the center anchor bolt as shown.
   - Apply liquid thread lock to the anchor bolt before reinstallation.
   - Make sure there are no twists or kinks in the seat belt buckle.

Center anchor bolt installation

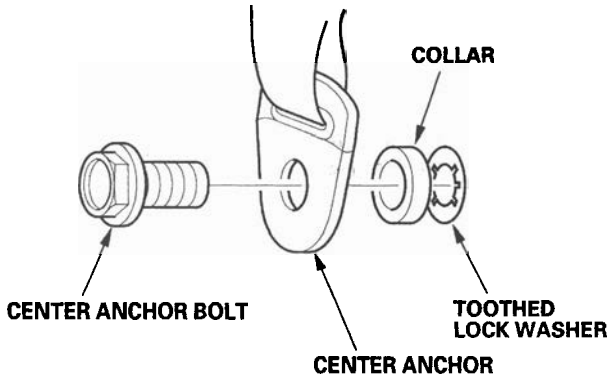

Inspection

For a front seat belt retractor with a seat belt tensioner, review the SRS component locations (see page 24-13) and the precautions and procedures (see page 24-15) before doing repairs or service.

Retractor

1. Before installing the retractor, check that the seat belt can be pulled out freely.

2. Make sure that the seat belt does not lock when the retractor (A) is leaned slowly up to 15 ° from the mounted position. The seat belt should lock when the retractor is leaned over 40 °. Do not attempt to disassemble the retractor.

Front

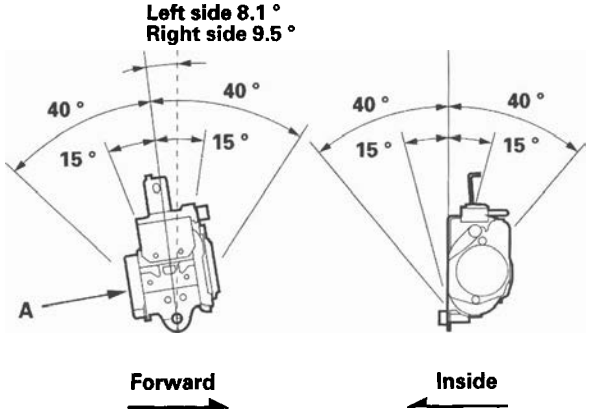

Rear

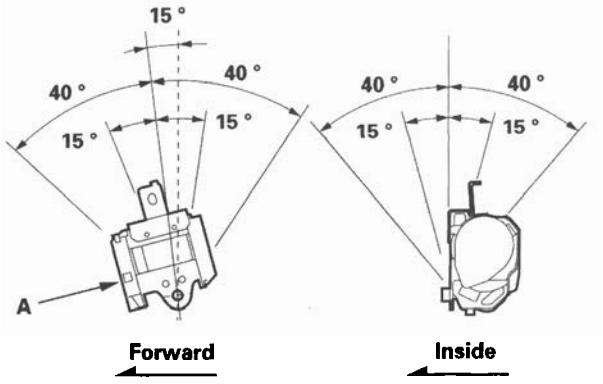

(cont'd)

Inspection (cont'd)

Rear center

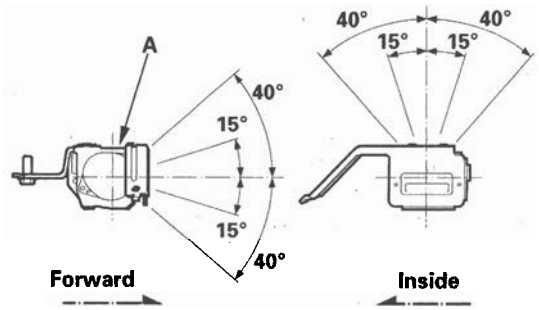

3. Replace the seat belt with a new assembly if there is any abnormality. Do not disassemble any part of the seat belt for any reason.

In-vehicle

1. Check that the seat belt is not twisted or caught on anything.

2. After installing the anchors, check for free movement on the anchor bolts. If necessary, remove the anchor bolts and check that the washers and other parts are not damaged or improperly installed.

3. Check the seat belts for damage or discoloration. Clean with a shop towel if necessary. Use only soap and water to clean.

   NOTE: Dirt buildup in the loops of the upper anchors can cause the seat belts to retract slowly. Wipe the inside of the loops with a clean cloth dampened in isopropyl alcohol.

4. Check that the seat belt does not lock when pulled out slowly. The seat belt is designed to lock only during a sudden stop or impact.

5. Make sure that the seat belt will retract automatically when released.

6. For front and rear passenger's seat belts, check the seat belt retractor locking mechanism ALR (automatic locking retractor). This function is for securing child seats:

   -1 Pull the seat belt all the way out to engage the ALR. The seat belt should retract with a soft, ratcheting sound, but not extend. This is normal.
   -2 To disengage the ALR, release the seat belt and allow it to fully retract, then pull the seat belt out part-way. The seat belt should retract and extend normally.

7. Replace the seat belt with a new assembly if there is any abnormality. Do not disassemble any part of the seat belt for any reason.

Component Location Index

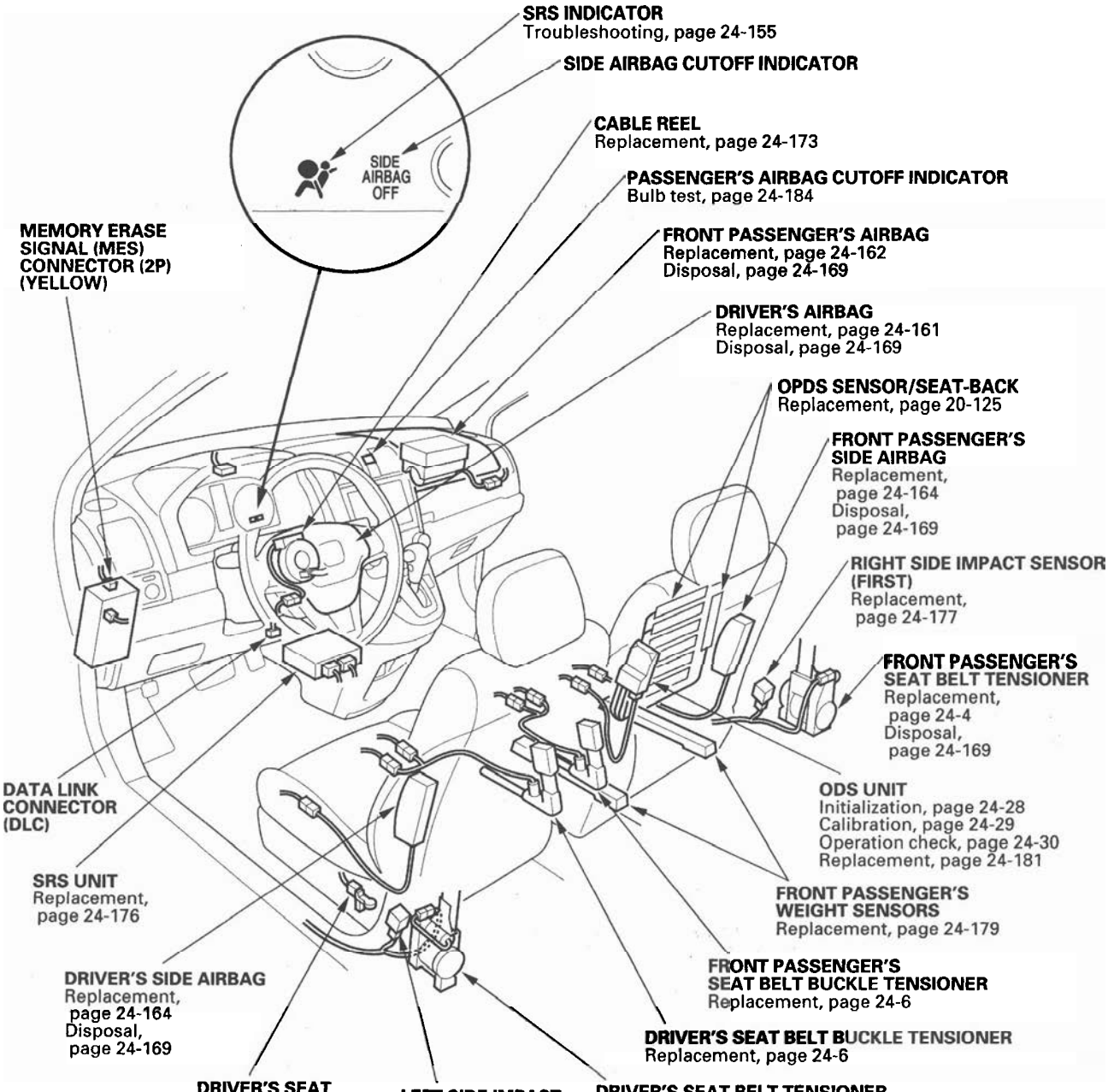

(cont'd)

Component Location Index (cont'd)

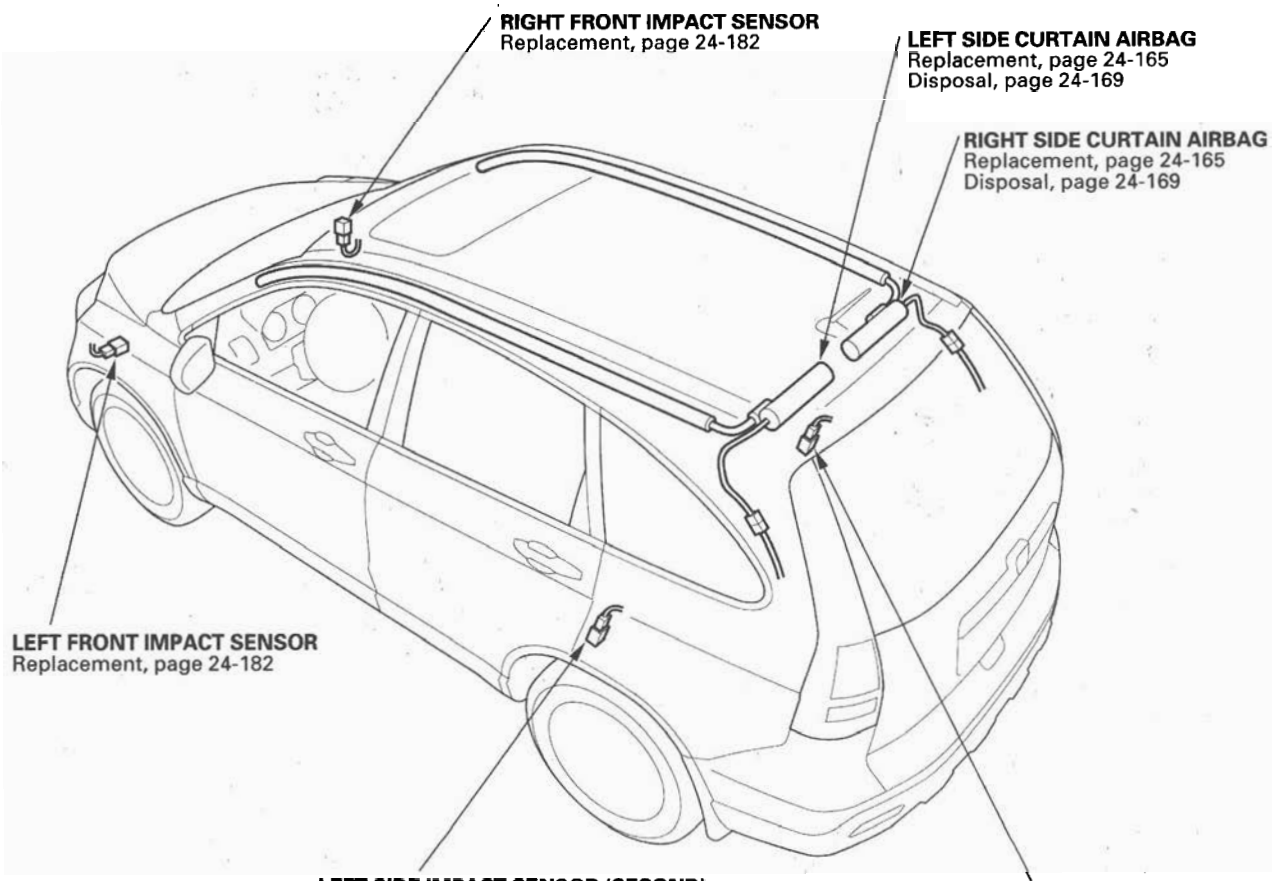

Precautions and Procedures

General Precautions

Please read the following precautions carefully before servicing the airbag system. Observe the instructions described in this manual, or the airbags could accidentally deploy and cause damage or injuries.

- Except when doing electrical inspections, always turn the ignition switch OFF, ground the SCS line with the HDS to take the PCM out of active status, disconnect the negative cable from the battery, and wait at least 3 minutes before beginning work.

  NOTE: The SRS memory is not erased even if the ignition switch is turned OFF or the battery cables are disconnected from the battery.

- Use replacement parts which are manufactured to the same standards and quality as the original parts. Do not install used SRS parts. Use only new parts when making SRS repairs.

- Carefully inspect any SRS part before you install it. Do not install any part that shows signs of being dropped or improperly handled, such as dents, cracks or deformation.

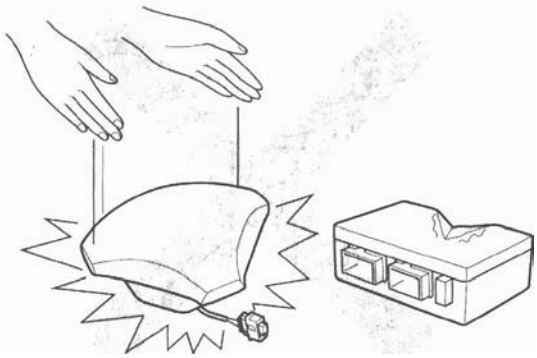

  Before removing any of the SRS parts (including the disconnection of the connectors), always disconnect the SRS connector.

- Use only a digital multimeter to check the system. If it is not a Honda multimeter, make sure its output is 10 mA (0.01 A) or less when switched to the lowest value in the ohmmeter range. A tester with a higher output could cause accidental deployment and possible injury.

- Do not put objects on the front passenger's airbag.

- The original audio and navigation system have a coded theft protection circuit. Be sure to get the anti-theft code and write down the XM audio presets (if equipped), before disconnecting the negative cable from the battery.

- Before returning the vehicle to the customer, enter the audio and the navigation code (if equipped), then enter the XM audio presets (if equipped); set the clock on vehicles without navigation.

Steering-related Precautions

Cable Reel Alignment

- Misalignment of the cable reel could cause an open in the wiring, making the SRS system, remote steering wheel controls, and the horn inoperative. Center the cable reel whenever the following is performed (see step 6 on page 24-175).
  - Installation of the steering wheel
  - Installation of the cable reel
  - Installation of the steering column
  - Other steering-related adjustment or installation

- Do not disassemble the cable reel.

- Do not apply grease to the cable reel.

- If the cable reel shows any signs of damage, replace it with a new one. For example, if it does not rotate smoothly, replace the cable reel.

(cont'd)

Precautions and Procedures (cont'd)

Airbag Handling and Storage

Do not disassemble an airbag. It has no serviceable parts. Once an airbag has been deployed, it cannot be repaired or reused.

For temporary storage of an airbag during service, observe the following precautions.

- Store the removed airbag with the pad surface up. Never put anything on the airbag.

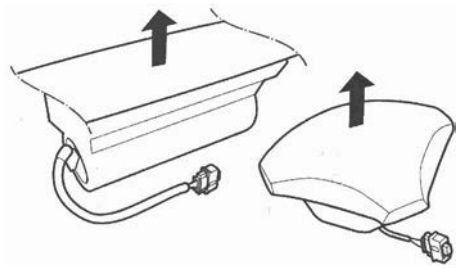

- To prevent damage to the airbag, keep it away from any oil, grease, detergent, or water.

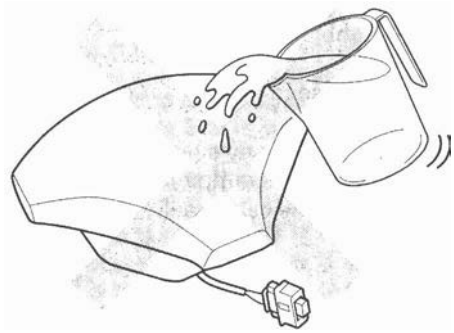

- Store the removed airbag on a secure, flat surface away from any high heat source (exceeding 200 °F/ 93 °C).

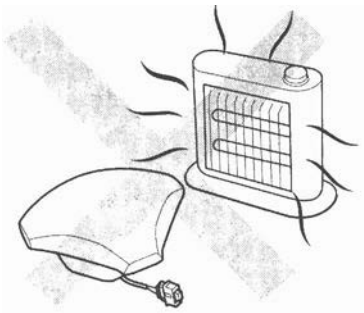

- Never do electrical tests on the airbags, such as measuring resistance.
- Do not position yourself in front of the airbag during removal, inspection, or replacement.

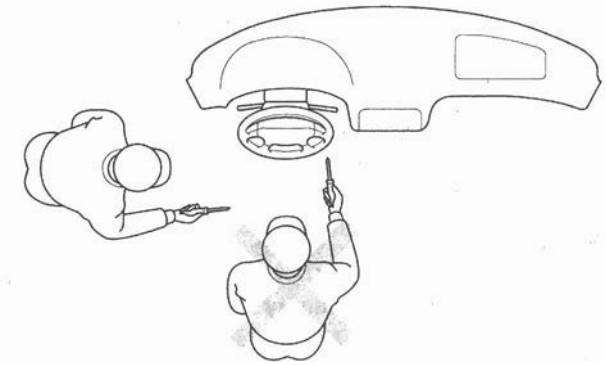

- For proper disposal of a damaged airbag, refer to airbag disposal (see page 24-169).
- The side curtain airbag inflator assembly is a long, jointed part containing an inflator (A), a flexible bag (B), and brackets (C).

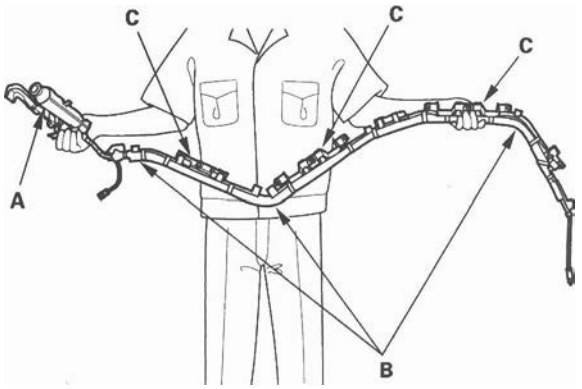

- When removing or installing the side curtain airbag inflator assembly, never handle the flexible bag (B).

SRS Unit, Impact Sensors, Driver's Seat Position Sensor, and Front Passenger's Weight Sensors

- Turn the ignition switch OFF, disconnect the negative cable from the battery and wait at least 3 minutes before beginning installation or replacement of the SRS unit, or disconnecting the connectors from the SRS unit.
- Be careful not to bump or impact the SRS unit, front impact sensors, or side impact sensors whenever the ignition switch is ON (II), or for at least 3 minutes after the ignition switch is turned OFF.
- During installation or replacement, be careful not to bump (by impact wrench, hammer, etc.) the area around the SRS unit, front impact sensors, or the side impact sensors. The airbags could accidentally deploy and cause damage or injury.

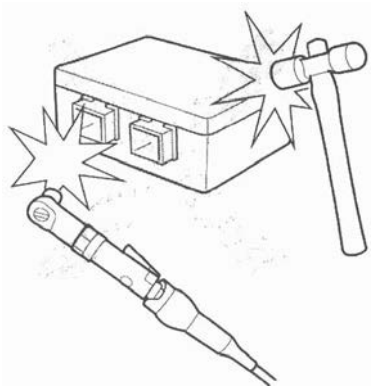

- After a collision in which a front airbag, side airbag, side curtain airbag, seat belt tensioner, or seat belt buckle tensioner deployed, go to Component Replacement/Inspection after Deployment (see page 24-158). After a collision in which the airbags or the side airbags did not deploy, inspect for any damage or any deformation on the SRS unit, front impact sensors, and the side impact sensors. If there is any damage, replace the SRS unit and/or the sensors.

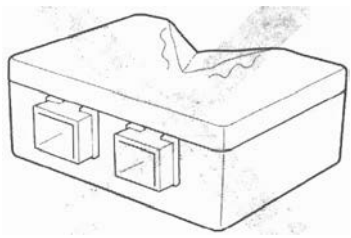

- Do not disassemble the SRS unit, front impact sensors, side impact sensors, driver's seat position sensor, or front passenger's weight sensors.
- Be sure the SRS unit, front impact sensors, and side impact sensors are installed securely with the mounting bolts torqued to 9.8 N·m (1.0 kgf·m, 7.2 lbf·ft)
- Do not spill water or oil on the SRS unit, or the side impact sensors, and keep them away from dust.
- Store the SRS unit, front impact sensors, and side impact sensors in a cool (less than 104 °F/40 °C) and dry (less than 80 % relative humidity, no moisture) area.

(cont'd)

Precautions and Procedures (cont'd)

Wiring Precautions

Some of the SRS wiring can be identified by special yellow outer covering, and the SRS connectors can be identified by their yellow color. Observe the instructions.

- Never attempt to modify, splice, or repair SRS wiring. If there is an open or damage in SRS wiring, replace the harness.

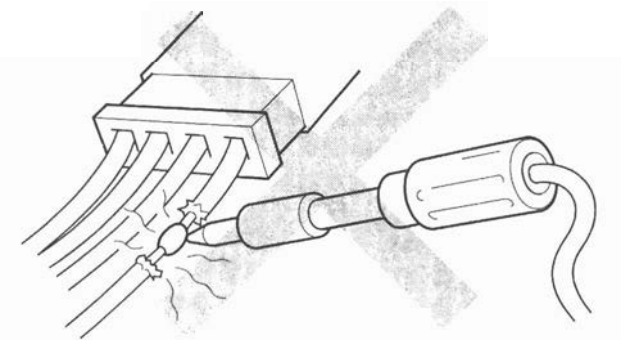

- Be sure to install the harness wires so they do not get pinched or interfere with other parts.

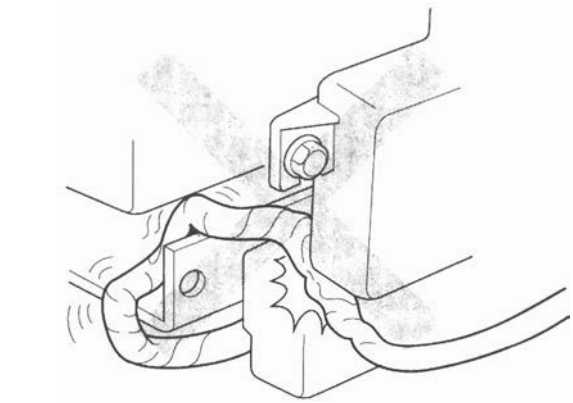

- Make sure all SRS ground locations are clean, and grounds are securely fastened for optimum metal-to-metal contact. Poor grounding can cause intermittent problems that are difficult to diagnose.
- Do not use any silicone based cleaners or lubricants on any SRS connectors or terminals.

Precautions for Electrical Inspections

- When using electrical test equipment, insert the probe of the tester into the wire side of the connector. Do not insert the probe of the tester into the terminal side of the connector, and do not tamper with the connector.

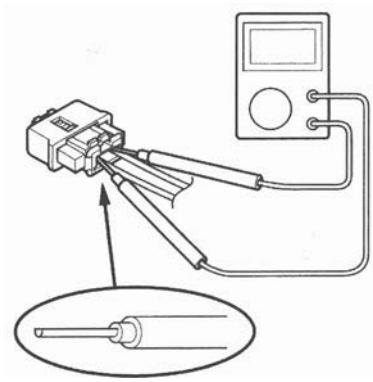

- Use a U-shaped probe. Do not insert the probe forcibly.

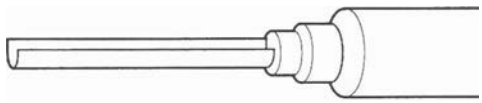

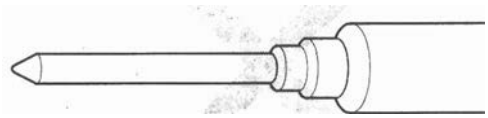

- Use specified service connectors in troubleshooting. Using improper tools could cause an error in inspection due to poor metal-to-metal contact.

Spring-loaded Lock Connector

Some SRS system connectors have a spring-loaded lock.

Front Airbag Connectors

Disconnecting
To release the lock, pull the spring-loaded sleeve (A) toward the stop (B) while holding the opposite half of the connector. Then pull the connector halves apart. Be sure to pull on the sleeve and not on the connector.

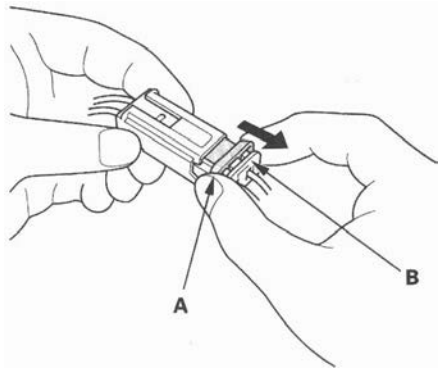

Connecting
To reconnect, hold the pawl-side connector, and press on the back of the sleeve-side connector in the direction shown. As the two connector halves are pressed together, the sleeve (A) is pushed back by the pawl (C). Do not touch the sleeve.

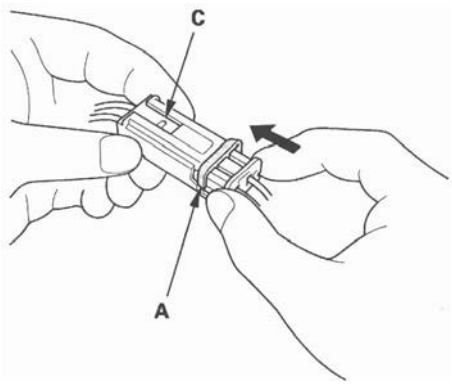

Side Airbag Connector

Disconnecting
To release the lock, pull the spring-loaded sleeve (A) toward the stop (B) while holding the opposite half of the connector. Then pull the connector halves apart. Be sure to pull on the sleeve and not on the connector half.

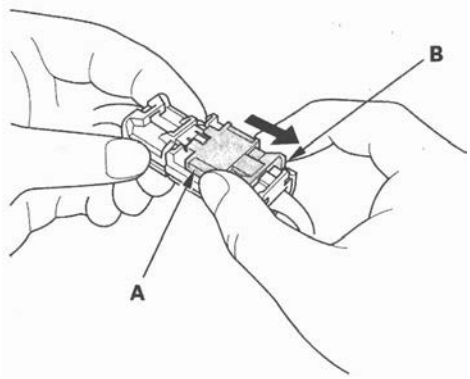

Connecting
Hold both connector halves, and press them firmly together until the projection (C) of the sleeve-side connector clicks.

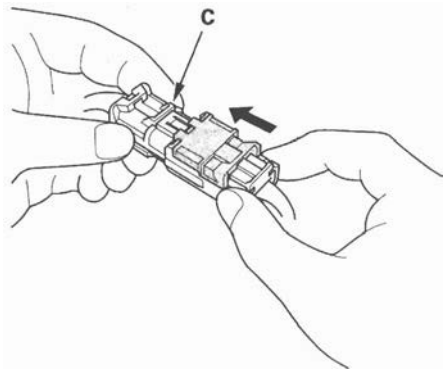

(cont'd)

Precautions and Procedures (cont'd)

Opening the SRS Unit Shorting Connectors for Diagnosis

Special Tools Required
SRS short canceller 070AZ-SAA0100

NOTE:
- To prevent damage of the connector cavity, insert the short canceller straight into the cavity from the terminal side.
- Before installing the short canceller, wash it with neutral detergent, then air blow dry it.
- Do not use the short canceller if it is damaged.
- Make sure to remove the short canceller before reconnection.

When SRS unit connectors A or B are disconnected, a short circuit is created in the connector by its own function to prevent an airbag deployment. The circuit may need to be open sometimes when diagnosis is done on the system. Insert the short canceller (No. 070AZ-SAA0100) in the specified cavities when it is necessary to keep the circuit open for diagnosis.

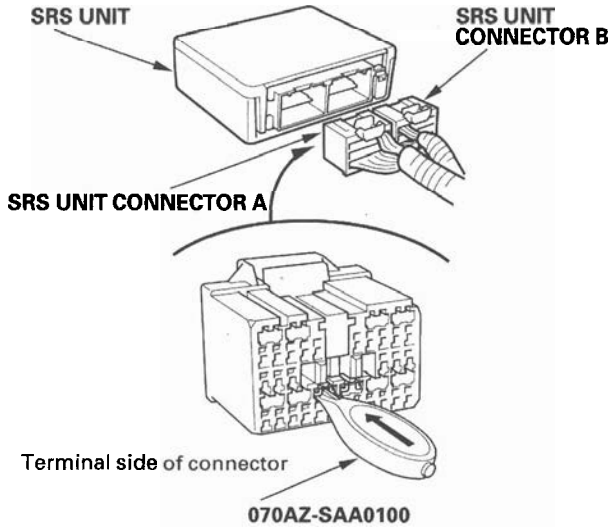

Terminal numbers are shown from the wire side of the female terminals. Insert the short canceller(s) into the cavities on the terminal side of the connector.

SRS UNIT CONNECTOR A (28P)

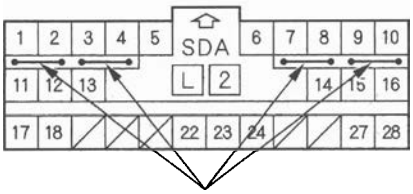

Insert short canceller(s) here.

Wire side of female terminals

SRS UNIT CONNECTOR B (28P)

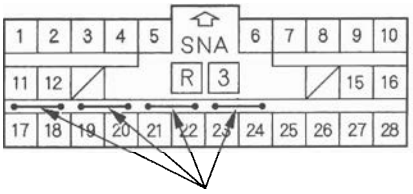

Insert short canceller(s) here.

Wire side of female terminals

Seats with Side Airbags

Seats with side airbags have a "SIDE AIRBAG" label on the seat-back.



- When cleaning, do not saturate the seat with liquid.
- Do not spray steam on the seat.
- Do not repair a torn or frayed seat-back cover. Replace the seat-back cover.
- After a collision in which the side airbag was deployed, replace the side airbag and seat frame with new parts. If the seat-back cushion is split, it must be replaced.
- Never put aftermarket accessories on the seat (covers, pads, seat heaters, lights, etc.).

(cont'd)

Precautions and Procedures (cont'd)

Disconnecting System Connectors

Turn the ignition switch OFF disconnect the negative cable from the battery, and wait at least 3 minutes before beginning the following procedures.

- Before disconnecting the cable reel 4P connector (1), disconnect the driver's airbag 4P connector (2).
- Before disconnecting SRS unit connector B from SRS unit, disconnect both seat belt tensioner 4P connectors and both seat belt buckle tensioner 4P connectors (3, 4, 5, 6).

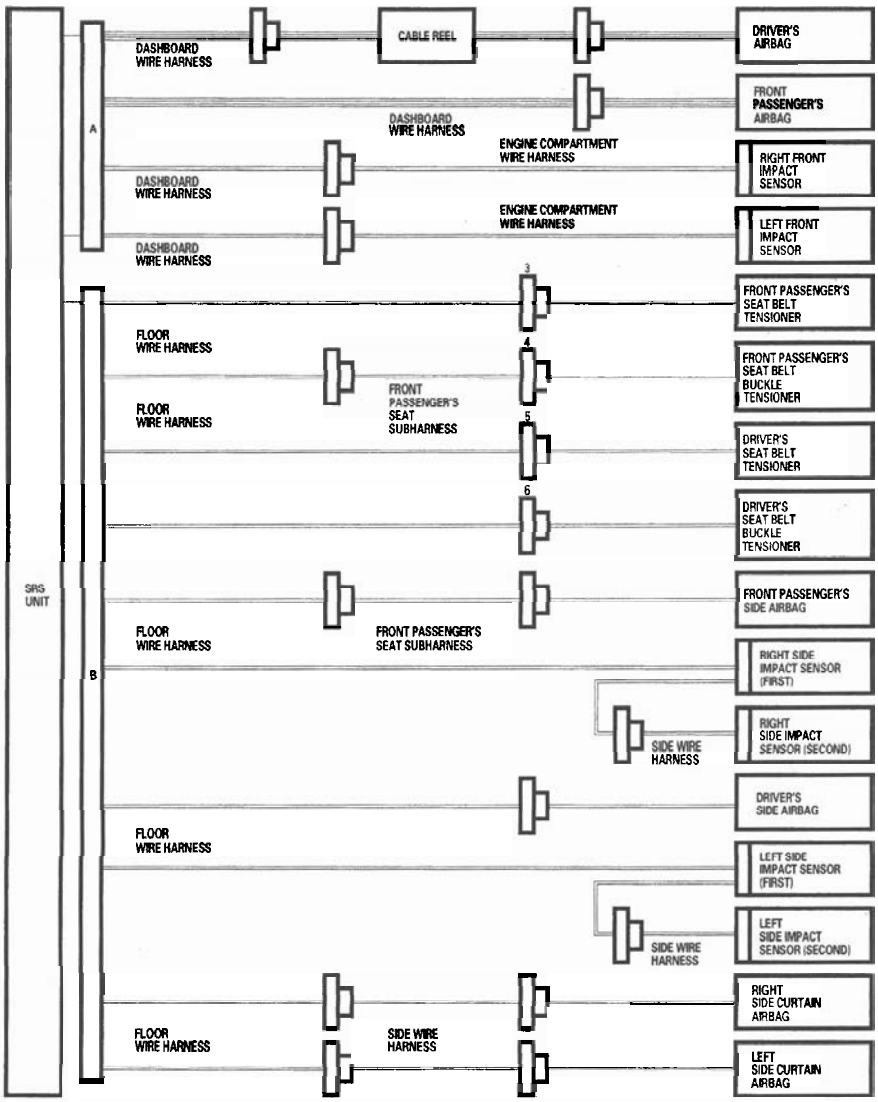

1. Disconnect the negative cable from the battery, and wait at least 3 minutes.

Driver's Airbag

2. Remove the access panel (A) from the steering wheel, then disconnect the driver's airbag 4P connector (B) from the cable reel.

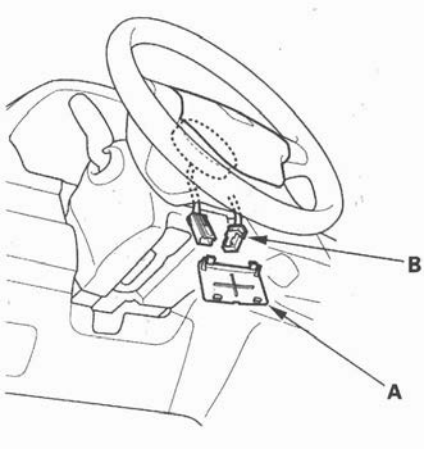

Front Passenger's Airbag

3. Detach the hook of the glove box damper and release the glove box stop or each side from the dashboard by pushing them inside (see step 1 on page 20-105), then disconnect the front passenger's airbag 4P connector (A) from the dashboard wire harness.

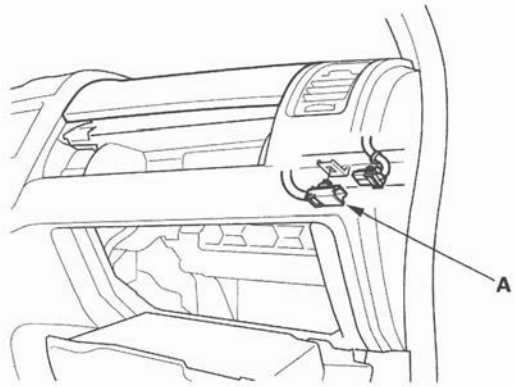

Side Airbag

4. Disconnect the side airbag 2P connector (A) from the floor wire harness or the front passenger's seat subharness.



Side Curtain Airbag

5. Remove the quarter piller glass trim (see page 20-74).

6. Disconnect both side wire harness 2P connectors (A) from the side curtain airbags.

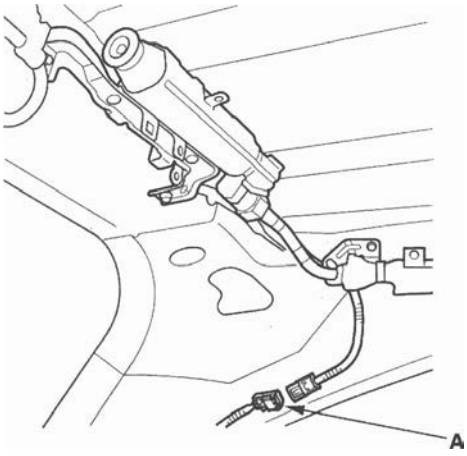

(cont'd)

Precautions and Procedures (cont'd)

Seat Belt Tensioner

7. Remove the B-pillar lower trim (see page 20-72), then disconnect both floor wire harness 4P connectors (A) from the seat belt tensioners.

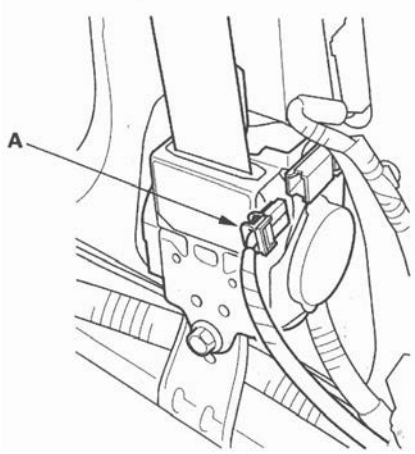

Seat Belt Buckle Tensioner

8. Disconnect the floor wire harness and the front passenger's seat subharness 4P connectors (A) from the seat belt buckle tensioner.

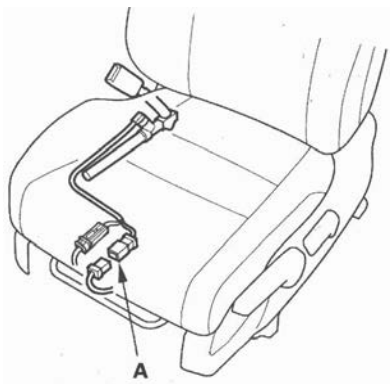

SRS Unit

9. Remove the dashboard center lower cover (see page 20-95), then disconnect SRS unit connector A and SRS unit connector B from the SRS unit.

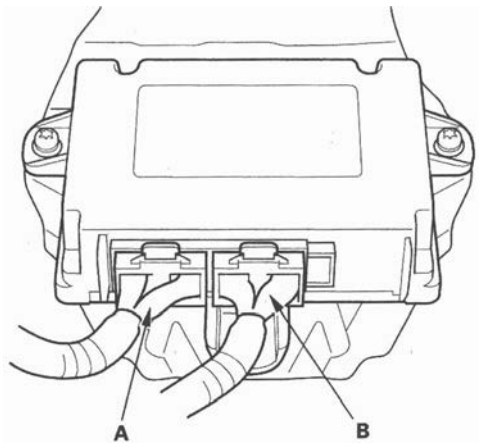

General Troubleshooting Information

DTC (Diagnostic Trouble Codes)

The self-diagnostic function of the SRS system allows it to locate the causes of system problems and then store this information in memory. For easier troubleshooting, this data can be retrieved via a data link circuit.

- When you turn the ignition switch ON (II), the SRS indicator comes on. If it goes off after 6 seconds, the system is normal, and is not currently detecting any abnormality.
- If there is an abnormality, the system locates and defines the problem, stores this information in memory, and turns the SRS indicator on. The data remains in the memory even when the ignition switch is turned off or if the battery is disconnected.
- The data is stored in memory as a diagnostic trouble code (DTC).
- DTCs are either latching or resetting depending on the malfunction. With resetting DTCs, the SRS indicator goes off the next time the ignition switch is turned ON and the system is normal, but the DTC is still stored. With latching DTCs, the SRS indicator does not turn OFF until the malfunction is repaired and the DTC is cleared.
- When you connect the HDS to the 16P data link connector (DLC), you can retrieve a more detailed DTC in the Honda Systems "SRS" menu.
- After reading and recording the DTC, proceed with the troubleshooting procedure for that code.

Precautions

- Use only a digital multimeter to check the system. If it's not a Honda multimeter, make sure its output is 10 mA (0.01 A) or less when switched to the smallest value in the ohmmeter range. A tester with a higher output could damage the airbag circuit or cause accidental airbag deployment and possible injury.
- Whenever the ignition switch is ON (II), or has been turned OFF for less than 3 minutes, be careful not to bump the SRS unit; the airbags could accidentally deploy and cause damage or injuries.
- Before you remove the SRS harness, disconnect the driver's airbag connector, the front passenger's airbag connector, both side airbag connectors, both side curtain airbag connectors, both seat belt tensioner connectors, and seat belt buckle tensioner connectors.
- Make sure the battery is sufficiently charged. If the battery is dead or low, measuring values may not be correct.
- Do not touch a tester probe to the terminals in the SRS unit or harness connectors, and do not connect the terminals with a jumper wire. Use only the backprobe set and the multimeter. Backprobe spring-loaded lock type connectors correctly.

Reading the DTC

1. Make sure the ignition switch is OFF.
2. Connect the HDS to the DLC (A).

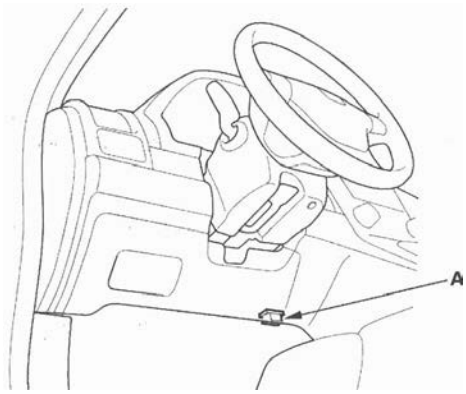

3. Turn the ignition switch ON (II).
4. Make sure the HDS communicates with the vehicle and the SRS unit. If it does not, troubleshoot the DLC circuit (see page 11-197).
5. Use the HDS to check for DTCs.
6. Read and record the DTC.
7. Turn the ignition switch OFF, and wait for 10 seconds.
8. Disconnect the HDS from the DLC.
9. Do the troubleshooting procedure for the DTC.

(cont'd)

General Troubleshooting Information (cont'd)

Erasing the DTC Memory With the HDS

NOTE: Make sure the battery is fully charged before you begin.

1. Make sure the ignition switch is OFF.
2. Connect the HDS to the DLC (A).

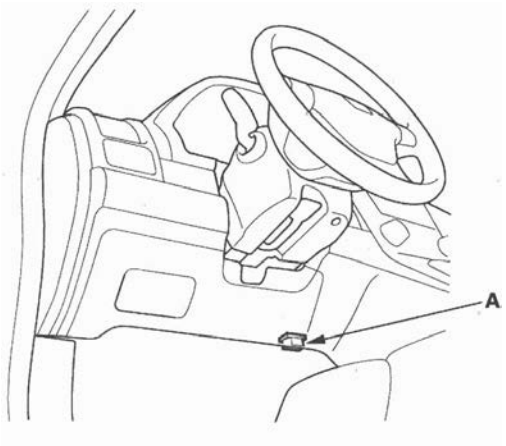

3. Turn the ignition switch ON (II).
4. Make sure the HDS communicates with the vehicle and the SRS unit. If it does not, troubleshoot the DLC circuit (see page 11-197).
5. In the SRS MENU of the HDS, select SRS, then DTC to erase DTC(s).
6. Turn the ignition switch OFF, and wait for 10 seconds.
7. Disconnect the HDS from the DLC.

Erasing the DTC Memory Using MES Connector Without the HDS

Special Tools Required
SCS Service Connector 07PAZ-001010A

NOTE: Make sure the battery is fully charged before you begin.

To erase the DTC(s) from the SRS unit, use the HDS or the following procedure.

1. Make sure the ignition switch is OFF.
2. Connect the SCS service connector (A) to the yellow MES 2P connector (B). Do not use a jumper wire.

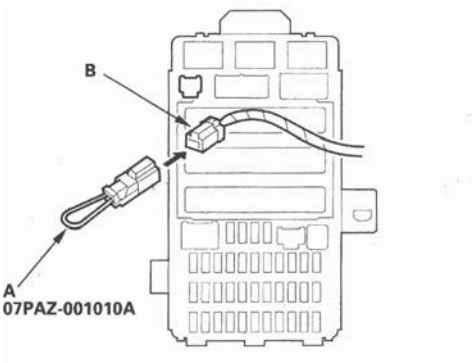

3. Turn the ignition switch ON (II).
4. The SRS indicator will come on for about 6 seconds, and then go off. Remove the SCS service connector from the MES connector (2P) within 4 seconds after the indicator goes off.
5. The SRS indicator will come on again. Reconnect the SCS service connector to the MES connector (2P) within 4 seconds after the indicator comes on.
6. When the SRS indicator goes off, remove the SCS service connector from the MES connector (2P) within 4 seconds.
7. The SRS indicator blinks two times, indicating that the memory has been erased.
8. Turn the ignition switch OFF, and wait for 10 seconds.
9. Turn the ignition switch ON (II) again. If the SRS indicator comes on for 6 seconds, and then goes off, the system is OK.

Troubleshooting Intermittent Failures

If there was a malfunction that sets a DTC, but it does not recur, it will be stored in the memory as an intermittent failure, and the SRS indicator may come on depending on the malfunction detected.

NOTE: Check the condition of the battery (see page 22-65), and the charging system (see page 4-26). Low battery voltage may cause some intermittent failures.

After checking the DTC, troubleshoot as follows:

1. Read the DTC (see "Reading the DTC").
2. Erase the DTC memory (see "Erasing the DTC Memory").
3. Set the parking brake, then start the engine, and let it idle.
4. The SRS indicator comes on for about 6 seconds and then goes off.
5. Shake the related wire harnesses and the connectors, and look for loose connections, poor pinfits, and poor grounds.
6. Take a test-drive (quick acceleration, quick braking, and cornering), turn the steering wheel fully left and right, and hold it there for 5 to 10 seconds. If the problem recurs, the SRS indicator will come on.

   NOTE: A faulty cable reel can cause intermittent connections related to the driver's airbag inflator DTCs.
7. If you cannot duplicate the concern, ask the customer about the conditions when it occured, or ask the customer to demonstrate the concern.
8. If you cannot duplicate the intermittent failure, the system is OK at this time.

Checking Seat Weight Sensors After a Vehicle Collision

1. Position the front passenger's seat to the rear most position, adjust the recliner to the most forward position. Do not move it from this position.
2. Drive the vehicle, accelerate to 20 mph (36 km/h), then stop on level ground.
3. Connect the HDS to the data link connector (DLC) (A).

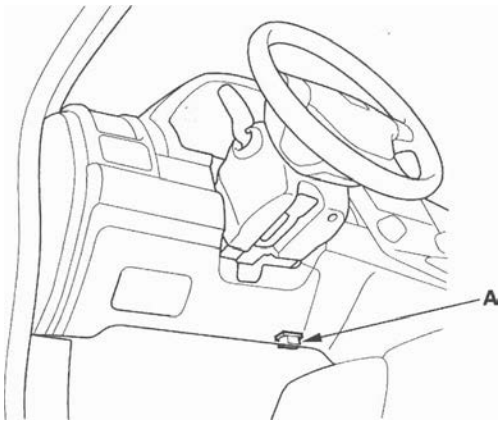

4. From the SRS inspection menu, select Seat Weight Sensor, then Misc test, then "SEAT OUTPUT CHK" and follow the prompts until the ODS operation check has been completed.

ODS Unit Initialization

When a seat-back cover, seat-back cushion, and/or ODS unit is replaced, initialize the ODS by following the procedure.

NOTE: A new (uninitialized) ODS unit installed with a faulty OPDS sensor can cause DTC 85-71.

1. Erase the DTC memory (see page 24-26).
2. Make sure the front passenger's seat is dry. Set the seat-back in a normal position, and make sure there is nothing on the seat.
3. Make sure the ignition switch is OFF and the MES connector is not shorted.
4. Connect the HDS to the DLC (A).

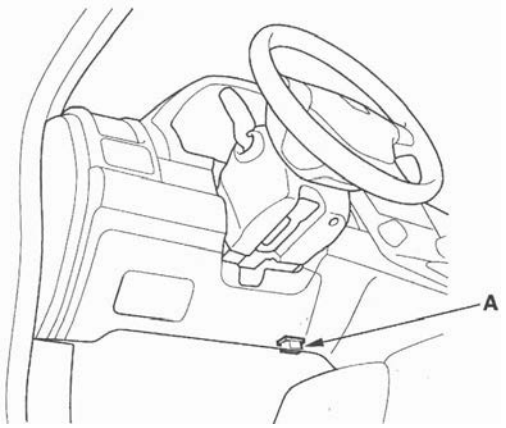

5. Turn the ignition switch ON (II).
6. Make sure the HDS communicates with the vehicle and the SRS unit. If it does not, troubleshoot the DLC circuit (see page 11-197).
7. From the HDS Main Menu, select SRS, then SRS, then Calibration. In the Calibration Menu, select ODS INITIALIZATION. Follow the screen prompts to initialize the ODS.
8. Turn the ignition switch OFF.
9. Disconnect the HDS from the DLC.

   NOTE: If the ODS system fails to initialize after several attempts, replace the OPDS sensor/seat-back and retry. If the ODS system continues to fail to initialize, replace the ODS unit (see page 24-181).

ODS Unit Calibration

When you replace the SRS unit, front passenger's weight sensors, or the ODS unit, calibrate the ODS unit.

While calibrating the ODS unit, observe these precautions:

- Make sure all components of the front passenger's seat are correctly installed.
- Make sure nothing is on or under the front passenger's seat.
- Make sure there is nothing in the front passenger's seat-back pocket.
- Keep the windows closed.
- Do all calibration procedures, except test-driving, in the service bay.
- Make sure the vehicle is on level ground.
- Keep the A/C and the heater off.
- Do not touch the front passenger's seat while you drive the vehicle.
- Do not expose the front passenger's seat to sudden temperature changes.

1. Position the front passenger's seat to the rearmost position, and adjust the recliner to the most forward position. Do not move the seat from these positions.

2. Connect the HDS to the data link connector (DLC) (A).

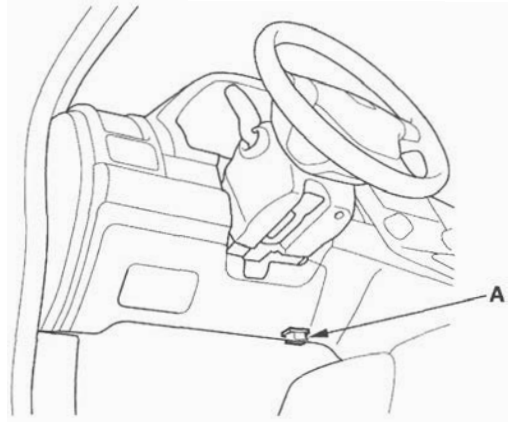

3. Make sure the HDS communicates with the vehicle and the SRS unit. If it does not, troubleshoot the DLC circuit (see page 11-197).

4. Drive the vehicle, and accelerate to 20 mph (36 km/h), then stop on level ground.

5. From the Main Menu, select SRS, then Calibration, then Misc Test, then select "SWS INITIALIZATION," and follow the prompts until the initialization operation has been completed.

ODS Unit Operation Check

Check the ODS operation after any of these actions.
- Replacement of front passenger's seat component(s) (except ODS unit and/or weight sensors)
- After a vehicle collision
- SRS unit replacement

Pre-Operation Check Set-up
- Make sure all the components of the front passenger's seat are correctly installed.
- Position the front passenger's seat to the rearmost position. Adjust the seat recline to the forward most position. Do not move the seat from this position.
- Make sure nothing is on or under the front passenger's seat.
- Make sure there is nothing in the front passenger's seat-back pocket.
- Keep the windows closed.
- Do all calibration procedures, except test-driving, in the service bay.
- Make sure the vehicle is on level ground.
- Turn the heater and the A/C off.
- Do not touch the passenger's seat during the calibration.
- Do not expose the front passenger's seat to sudden temperature changes.
- Make sure all aftermarket devices such as a amplifiers, fluorescent lights, air purifiers, CB or HAM radios, etc, are turned off.

After Replacing Front Passenger's Seat Component(s)

1. Connect the HDS to the data link connector (DLC) (A).

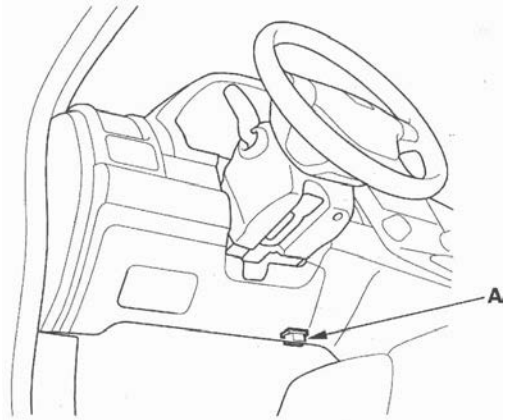

2. Make sure the HDS communicates with the vehicle and the SRS unit. If it does not, troubleshoot the DLC circuit (see page 11-197).

3. Drive the vehicle, accelerate to 20 mph (36 km/h), then stop on level ground.

4. From the HDS Main Menu, select SRS, then Inspection. In the HDS Inspection Menu, select "SEAT OUTPUT CHK" and follow the prompts until the ODS operation check has been completed.

Driver's Seat Position Sensor Operation Check

Check the driver's seat position after any of these actions.

- Driver's seat position sensor replacement
- Cover plate (front side of driver's seat slide rail) replacement

1. Make sure the driver's seat is at its full forward position.
2. Make sure the ignition switch is OFF (0).
3. Connect the HDS to the DLC (A).

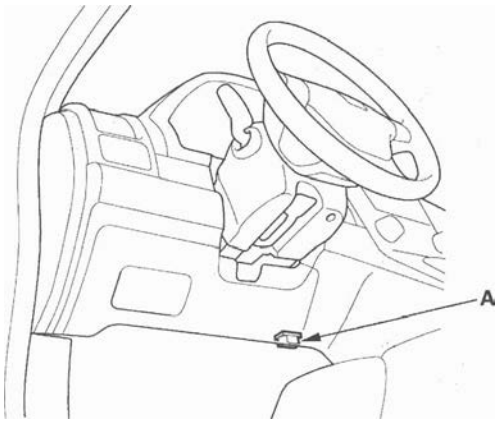

4. Turn the ignition switch ON (II).
5. From the HDS Main Menu, select SRS, then Parameter Information, then Buckle Switch, Seat Position Sensor.
6. Using a piece of tape (A), mark the location on the seat's outer cover (B) where the front riser cover meets the seat riser (C). The driver's seat position sensor should read "NEAR."

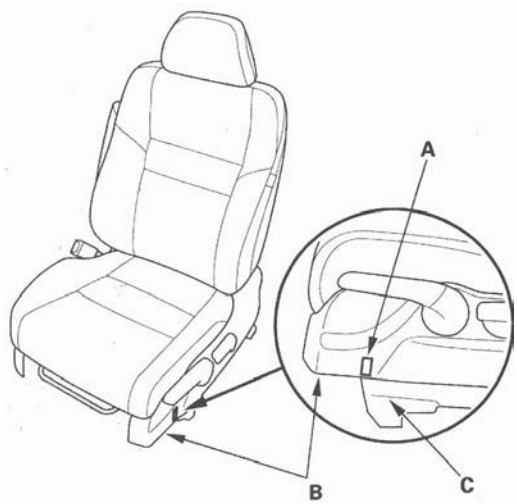

7. Move the seat back in small increments (about 0.2 in., 5 mm) until the driver's seat position sensor reads "NOT NEAR." The seat should be approximately 1 in. (25 mm) from the front.

   NOTE: It takes a few seconds for the HDS to display changes, so wait about 5 seconds between each move.

   If the driver's seat position sensor data does not work as described above, check the driver's seat position sensor or the cover plate for damage, and replace parts as needed.

8. Turn the ignition switch OFF, and disconnect the HDS from the DLC.

DTC Troubleshooting Index

DTC	Latch*1	Reset*2	Detection Item	Notes
11-1x		×	Open or increased resistance in driver's airbag first inflator	(see page 24-48)
11-3x			Short to another wire or decreased resistance in driver's airbag first inflator	(see page 24-49)
11-4x			Open or increased resistance in driver's airbag second inflator	(see page 24-48)
11-6x			Short to another wire or decreased resistance in driver's airbag second inflator	(see page 24-49)
11-8x	×		Short to power in driver's airbag first inflator	(see page 24-51)
11-9x			Short to ground in driver's airbag first inflator	(see page 24-52)
11-Ax			Short to power in driver's airbag second inflator	(see page 24-51)
11-Bx			Short to ground in driver's airbag second inflator	(see page 24-52)
12-1x		×	Open or increased resistance in front passenger's airbag first inflator	(see page 24-54)
12-3x			Short to another wire or decreased resistance in front passenger's first inflator	(see page 24-55)
12-4x			Open or increased resistance in front passenger's airbag second inflator	(see page 24-54)
12-6x			Short to another wire or decreased resistance in front passenger's second inflator	(see page 24-55)
12-8x	×		Short to power in front passenger's airbag first inflator	(see page 24-56)
12-9x			Short to ground in front passenger's airbag first inflator	(see page 24-57)
12-Ax			Short to power in front passenger's airbag second inflator	(see page 24-56)
12-Bx			Short to ground in front passenger's airbag second inflator	(see page 24-57)
21-1x		×	Open or increased resistance in driver's seat belt tensioner	(see page 24-58)
21-3x			Short to another wire or decreased resistance in driver's seat belt tensioner	(see page 24-59)
21-8x	×		Short to power in driver's seat belt tensioner	(see page 24-60)
21-9x			Short to ground in driver's seat belt tensioner	(see page 24-61)
22-1x		×	Open or increased resistance in front passenger's seat belt tensioner	(see page 24-62)
22-3x			Short to another wire or decreased resistance in front passenger's seat belt tensioner	(see page 24-63)
22-8x	×		Short to power in front passenger's seat belt tensioner	(see page 24-64)
22-9x			Short to ground in front passenger's seat belt tensioner	(see page 24-65)
27-1x		×	Open or increased resistance in driver's seat belt buckle tensioner	(see page 24-66)
27-3x			Short to another wire or decreased resistance in driver's seat belt buckle tensioner	(see page 24-67)
27-8x	×		Short to power in driver's seat belt buckle tensioner	(see page 24-68)
27-9x			Short to ground in driver's seat belt buckle tensioner	(see page 24-69)
28-1x		×	Open or increased resistance in front passenger's seat belt buckle tensioner	(see page 24-70)
28-3x			Short to another wire or decreased resistance in front passenger's seat belt buckle tensioner	(see page 24-71)
28-8x	×		Short to power in front passenger's seat belt buckle tensioner	(see page 24-73)
28-9x			Short to ground in front passenger's seat belt buckle tensioner	(see page 24-74)

DTC	Latch *1	Reset *2	Detection Item	Notes
31-1x		X	Open or increased resistance in driver's side airbag inflator	(see page 24-76)
31-3x			Short to another wire or decreased resistance in driver's side airbag inflator	(see page 24-77)
31-8x	X		Short to power in driver's side airbag inflator	(see page 24-78)
31-9x			Short to ground in driver's side airbag inflator	(see page 24-79)
32-1x		X	Open or increased resistance in front passenger's side airbag inflator	(see page 24-80)
32-3x			Short to another wire or decreased resistance in front passenger's side airbag inflator	(see page 24-81)
32-8x	X		Short to power in front passenger's side airbag inflator	(see page 24-83)
32-9x			Short to ground in front passenger's side airbag inflator	(see page 24-84)
33-1x		X	Open or increased resistance in left side curtain airbag inflator	(see page 24-86)
33-3x			Short to another wire or decreased resistance in left side curtain airbag inflator	(see page 24-88)
33-8x	X		Short to power in left side curtain airbag inflator	(see page 24-90)
33-9x			Short to ground in left side curtain airbag inflator	(see page 24-92)
34-1x		X	Open or increased resistance in right side curtain airbag inflator	(see page 24-94)
34-3x			Short to another wire or decreased resistance in right side curtain airbag inflator	(see page 24-96)
34-8x	X		Short to power in right side curtain airbag inflator	(see page 24-98)
34-9x			Short to ground in right side curtain airbag inflator	(see page 24-100)
41-1x		X	No signal from the left front impact sensor	(see page 24-102)
41-2x			Internal failure of the left front impact sensor	(see page 24-107)
41-3x				
41-Bx	X			
42-1x		X	No signal from the right front impact sensor	(see page 24-104)
42-2x			Internal failure of the right front impact sensor	(see page 24-107)
42-3x				
42-Bx	X			
43-1x		X	No signal from the left side impact sensor (first)	(see page 24-108)
43-2x			Internal failure of the left side impact sensor (first)	(see page 24-113)
43-8x				
43-Bx	X			
44-1x		X	No signal from the right side impact sensor (first)	(see page 24-110)
44-2x			Internal failure of the right side impact sensor (first)	(see page 24-113)
44-8x				
44-Bx	X			
45-1x		X	No signal from left side impact sensor (second)	(see page 24-114)
45-2x			Internal failure of left side impact sensor (second)	(see page 24-119)
45-8x				
45-Bx	X			
46-1x		X	No signal from right side impact sensor (second)	(see page 24-116)
46-2x			Internal failure of right side impact sensor (second)	(see page 24-119)
46-8x				
46-Bx	X			

NOTE: The "x" at the end of each DTC denotes a numeric character (0 thru 9) or an alpha character (A thru F) that you will see on the HDS display. The character is unrelated to your troubleshooting; it designates the SRS unit manufacturer and other detail used for product analysis.

* 1: The SRS indicator turns on and stays on whenever the ignition switch is in the ON (II) position, or until the code is cleared.

* 2: The SRS indicator turns on when the DTC is set. The SRS indicator will not turn on after the ignition switch is cycled from ON (II) to OFF (0), but the DTC will be stored in the SRS unit.

(cont'd)

DTC Troubleshooting Index (cont'd)

DTC	Latch *1	Reset *2	Detection Item	Notes
51-xx		X	Internal failure of SRS unit	(see page 24-119)
52-xx	X			
53-xx		X		
54-xx				
55-xx				
56-11			Lost communication with the PCM (engine message)	(see page 24-121)
56-12			Undefined data received from the PCM (engine message)	(see page 24-122)
56-13				
56-21			Lost communication with the PCM (A/T message)	(see page 24-121)
56-22			Undefined data received from the PCM (A/T message)	(see page 24-122)
56-23				
56-25			Lost communication with the gauge control module	
56-26			Undefined data received from the gauge control module	(see page 24-123)
56-27				
57-xx	X		Internal failure of SRS unit	(see page 24-119)
58-xx				
61-1x		X	Open in driver's seat belt buckle switch	(see page 24-124)
61-2x			Short in driver's seat belt buckle switch	(see page 24-125)
62-1x			Open in front passenger's seat belt buckle switch	(see page 24-126)
62-2x			Short in front passenger's seat belt buckle switch	(see page 24-127)
71-1x			Open in driver's seat position sensor	(see page 24-128)
71-2x			Short in driver's seat position sensor	(see page 24-129)

DTC	Latch *1	Reset *2	Detection Item	Notes
81-4x		X	Faulty ODS unit	(see page 24-134)
81-5x				
81-61			No signal from ODS unit	(see page 24-131)
81-62			Non-stipulated response data	
81-63			Model ID code or variation inconsistent	(see page 24-134)
81-64			ECU serial ID code inconsistent	
81-71			ODS unit does not calibrate	(see page 24-133)
81-78				
81-79			Front passenger's weight sensors drift check failure	(see page 24-134)
82-14			No signal from the front passenger's weight sensor (front inner side)	(see page 24-135)
82-16			No signal from the front passenger's weight sensor (rear inner side)	(see page 24-138)
83-24			No signal from the front passenger's weight sensor (front outer side)	(see page 24-141)
83-26			No signal from the front passenger's weight sensor (rear outer side)	(see page 24-144)
85-4x			Faulty ODS unit	(see page 24-147)
85-5x				
85-61			No signal from the ODS unit	(see page 24-131)
85-62			Non-stipulated response data	
85-63			Model ID code or variation code inconsistent	(see page 24-147)
85-64			ECU serial ID code inconsistent	
85-71			ODS unit does not initialize	(see page 24-133)
85-78				
85-79			OPDS drift check failure	(see page 24-147)
86-1x			Faulty seat-back ODS sensor	(see page 24-148)
86-2x			Faulty seat support ODS sensor	
92-1x			Short to power in the front passenger's airbag cutoff indicator	(see page 24-149)
92-2x			Open or short to ground in the front passenger's airbag cutoff indicator	(see page 24-150)
A1-1x			Faulty power supply (VA line)	(see page 24-152)
A2-1x			Faulty power supply (VB line)	(see page 24-153)
E2-11			Front passenger's airbag does not deploy by SWS operation	(see page 24-120)
E4-11			Front passenger's side airbag does not deploy by OPDS operation	
F1-11			Driver's airbag and/or driver's seat belt tensioner and/or front passenger's seat belt buckle tensioner deployed	
F2-11			Front passenger's airbag and/or front passenger's seat belt tensioner and/or front passenger's seat belt buckle tensioner deployed	
F3-11			Driver's side airbag, left side curtain airbag, and/or driver's seat belt tensioner deployed	
F4-11			Front passenger's side airbag, right side curtain airbag, and/or front seat belt tensioner deployed	

NOTE: The "x" at the end of each DTC denotes a numeric character (0 thru 9) or an alpha character (A thru F) that you will see on the HDS display. The character is unrelated to your troubleshooting; it designates the SRS unit manufacturer and other detail used for product analysis.

* 1: The SRS indicator turns on and stays on whenever the ignition switch is in the ON (II) position, or until the code is cleared.

* 2: The SRS indicator turns on when the DTC is set. The SRS indicator will not turn on after the ignition switch is cycled from ON (II) to OFF (0), but the DTC will be stored in the SRS unit.

(cont'd)

DTC Troubleshooting Index (cont'd)

ODS Unit DTC Index

SRS Unit DTC	ODS Unit DTC	Detection Item	Notes
81-42	42-11	Internal failure of the ODS unit	(see page 24-134)
	42-12		
	42-14		
	42-15		
	42-16		
	42-18		
	42-21		
	42-23		
	42-24		
	42-25		
	42-26		
81-43	43-31	Internal failure of the ODS unit	
	43-32		
	43-33		
	43-34		
	43-35		
	43-36		
	43-37		
	43-38		
	43-41		
	43-42		
81-71	71-41	ODS unit does not calibrate	(see page 24-133)
	71-42	Front passenger's weight sensor (front inner side) serial ID code inconsistent	
	71-43	Front passenger's weight sensor (rear inner side) serial ID code inconsistent	
	71-44	Front passenger's weight sensor (front outer side) serial ID code inconsistent	
	71-45	Front passenger's weight sensor (rear inner side) serial ID code inconsistent	
	71-51	Faulty power supply to the ODS unit	
	71-52	ODS unit does not calibrate	
	71-53	Communication error between ODS unit and front passenger's weight sensor	
	71-54	Front passenger's weight sensor serial ID code acquisition failure	
	71-55	Unsuccessful ODS unit calibration	
	71-56		
	71-57		

ODS Unit DTC Index

SRS Unit DTC	ODS Unit DTC	Detection Item	Notes
82-14	14-11	Short to power in the front passenger's weight sensor (front inner side) power line	(see page 24-135)
	14-12	Short to ground in the front passenger's weight sensor (front inner side) power line	
	14-13	Open in the front passenger's weight sensor (front inner side) signal line	
	14-14	Short to ground in the front passenger's weight sensor (front inner side) signal line	
82-16	16-11	Short to power in the front passenger's weight sensor (rear inner side) power line	(see page 24-138)
	16-12	Short to ground in the front passenger's weight sensor (rear inner side) power line	
	16-13	Open in the front passenger's weight sensor (rear inner side) signal line	
	16-14	Short to ground in the front passenger's weight sensor (rear inner side) signal line	
83-24	24-11	Short to power in the front passenger's weight sensor (front outer side) power line	(see page 24-141)
	24-12	Short to ground in the front passenger's weight sensor (front outer side) power line	
	24-13	Open in the front passenger's weight sensor (front outer side) signal line	
	24-14	Short to ground in the front passenger's weight sensor (front outer side) signal line	
83-26	26-11	Short to power in the front passenger's weight sensor (rear outer side) power line	(see page 24-144)
	26-12	Short to ground in the front passenger's weight sensor (rear outer side) power line	
	26-13	Open in the front passenger's weight sensor (rear outer side) signal line	
	26-14	Short to ground in the front passenger's weight sensor (rear outer side) signal line	

Symptom Troubleshooting Index

Symptom	Diagnostic procedure	Also check for
SRS indicator does not come on	Symptom Troubleshooting (see page 24-155)	Communication with HDS
SRS indicator stays on, but no DTCs are stored	Symptom Troubleshooting (see page 24-155)	Charging system for under or over charging
Side airbag cutoff indicator is flashing	Check the DTC. If DTC indicated, go to the DTC troubleshooting	Communication with HDS
Side airbag cutoff indicator stays on	Symptom Troubleshooting (see page 24-156)	Communication with HDS
Side airbag cutoff indicator does not come on	Symptom Troubleshooting (see page 24-156)	Communication with HDS
Passenger's airbag cutoff indicator is flashing	Check the DTC. If DTC indicated, go to the DTC troubleshooting	Communication with HDS
Passenger's airbag cutoff indicator stays on or comes on suddenly	Symptom Troubleshooting (see page 24-157)	Communication with HDS
Passenger's airbag cutoff indicator does not come on	Check the DTC. If DTC indicated, go to the DTC troubleshooting	Communication with HDS
HDS does not communicate with the SRS unit or the vehicle	Troubleshoot the DLC circuit (see page 11-197)	Communication with HDS

System Description

SRS Components

Airbags
The SRS is a safety device which, when used with the seat belt, is designed to help protect the driver and front passenger in a frontal impact exceeding a certain set limit. The system consists of the SRS unit, including safing sensor and impact sensor (A), the cable reel (B), the driver's airbag (C), the front passenger's airbag (D), side airbags (E), side curtain airbags (J), seat belt tensioners (G), seat belt buckle tensioners (H), side impact sensors (first) (F), front impact sensors (M) and side impact sensors (second) (I).
Since the driver's and front passenger's airbags use the same sensors, both normally inflate at the same time. However, it is possible for only one airbag to inflate. This can occur when the severity of a collision is at the margin, or threshold, that the SRS unit determines whether or not the airbags will deploy. In such cases, the seat belt will provide sufficient protection, and the supplemental protection offered by the airbag would be minimal.

Front Passenger's Weight Sensors
The ODS unit (K) is in the front passenger's seat-back. The seat weight sensors (L) are part of the seat base. The weight sensors detect the weight on the seat, and send the information to the ODS unit. If the total weight is about 65 lbs (30 kg) or less, the ODS unit sends a signal to the SRS unit to prevent the front passenger's airbag from deploying. When the front passenger's airbag is disabled, the passenger airbag cutoff indicator on the center panel comes on to alert the driver that the front passenger's airbag will not deploy in a front-end collision.

Driver's Seat Position Sensor
The driver's seat position sensor (N) is under the driver's seat on the left side. When the driver's seat is moved to its full forward position, the deployment of the driver's airbag is moderated to decrease its force of impact during a front-end collision.

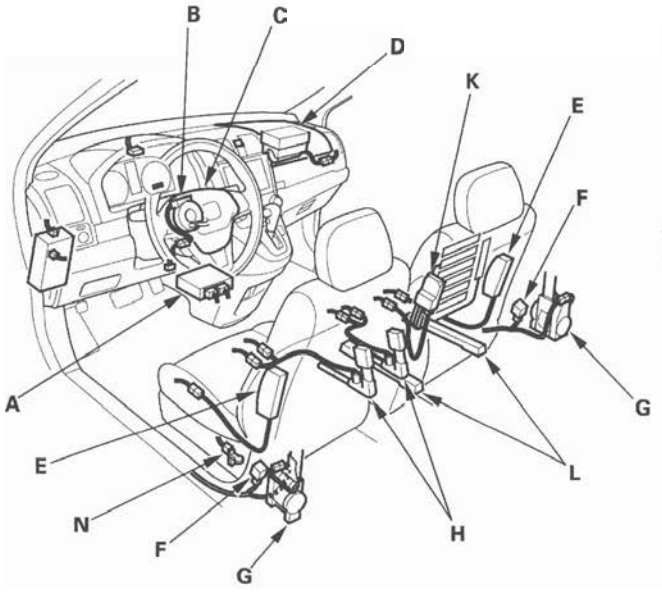

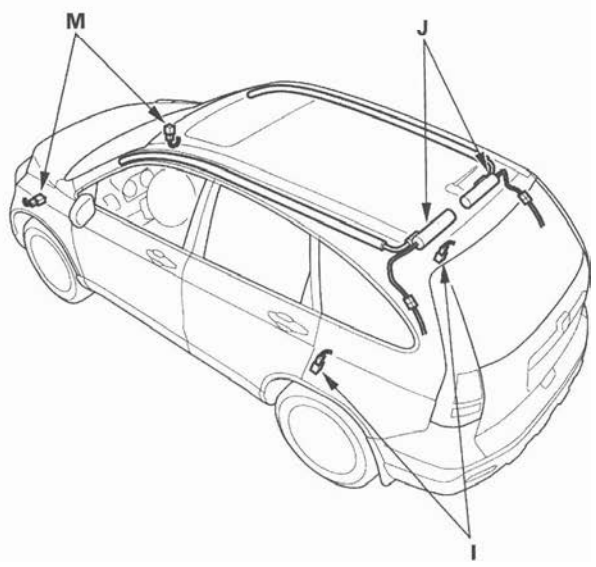

(cont'd)

System Description (cont'd)

Side Airbag Cutoff Indicator/ODS Operation

The indicator comes on if the front passenger's seat is occupied by a small adult or child who is leaning into the deployment path, or an object (grocery bag, briefcase, purse, etc.) is in the seat. When the indicator comes on, the passenger's side airbag is off and will not deploy; there is no problem with the side airbag. If the passenger sits upright or moves to another seat, or you remove the object from the seat, the light should go off. There will be some delay between the occupant's repositioning, and when the indicator will turn on or off.

Passenger Airbag Cutoff Indicator

The indicator comes on if the weight of the front passenger is about 65 lbs (30 kg) or less. This indicates the passenger's front airbag is off and will not deploy. The front airbag is shut off to reduce the chance of airbag-caused injuries.

SRS Operation

The main circuit in the SRS unit senses and judges the force of impact and, if necessary, ignites the inflator charges. If battery voltage is too low or power is disconnected due to the impact, the voltage regulator and the back-up power circuit will keep voltage at a constant level.

For the SRS to operate

Seat Belt Tensioners and Seat Belt Buckle Tensioners

(1) A front impact sensor, or side impact sensor, must activate and send electric signals to the microprocessor.
(2) The microprocessor must compute the signals and send them to the tensioners.
(3) The charges must ignite and deploy the tensioners.

Driver's and Front Passenger's Airbag(s)

(1) A front impact sensor must activate, and send electric signals to the microprocessor.
(2) The microprocessor must compute the signals, and send them to the airbag inflator(s).
(3) The inflators that received signals must ignite and deploy the airbags.

Side Airbag(s)

(1) A side impact sensor must activate, and send electric signals to the microprocessor.
(2) The microprocessor must compute the signals and send them to the side airbag inflator(s). However, the microprocessor cuts off the signals to the front passenger's side airbag if the SRS unit determines that the front passenger's head is in the deployment path of the side airbag.
(3) The inflator that received the signal must ignite and deploy the side airbag.

Side Curtain Airbag(s)

(1) Side impact sensor must activate, and send electrical signals to the microprocessor.
(2) The microprocessor must compute the signals and send them to the side curtain airbag and side airbag inflator(s).
(3) The inflator that received the signals must ignite and deploy the side curtain airbag and side airbag at the same time.

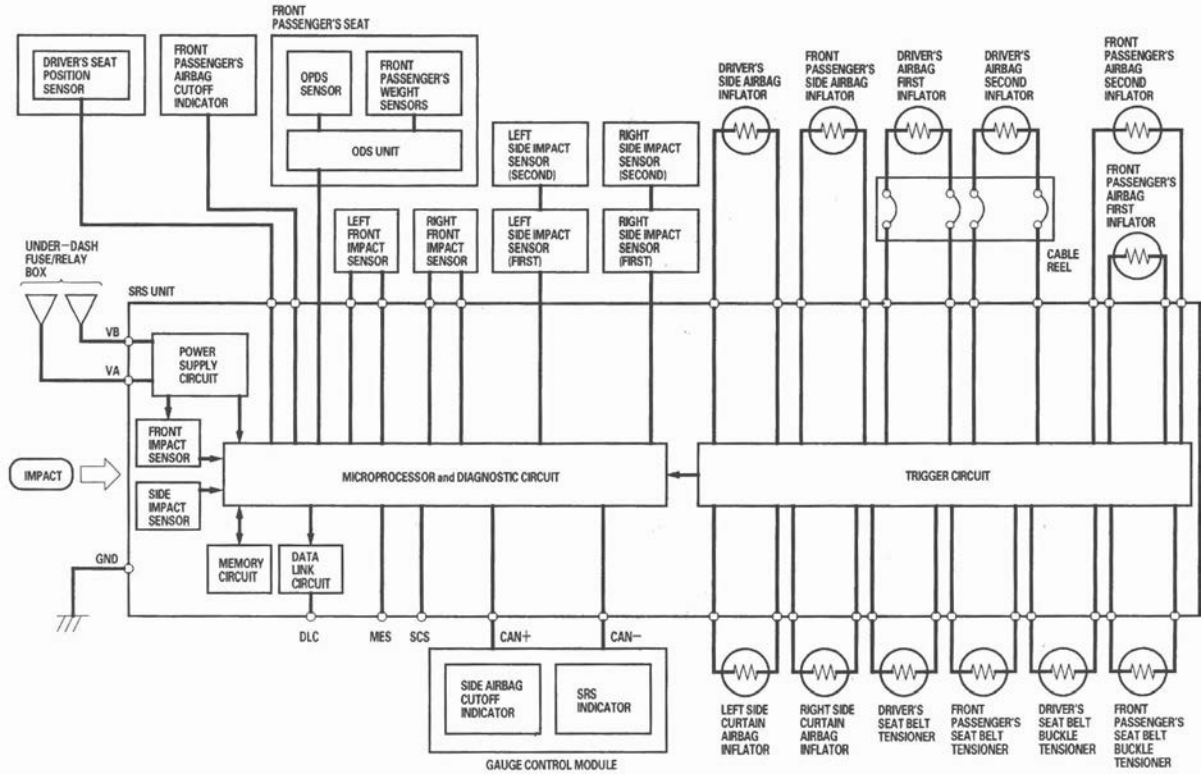

Self-diagnostic System

A self-diagnostic circuit is built into the SRS unit; when the ignition switch is turned ON (II), the SRS indicator comes on and goes off after about 6 seconds if the system is operating normally.

If the indicator does not come on, or does not go off after 6 seconds, or if it comes on while driving, it indicates an abnormality in the system. The system must be inspected and repaired as soon as possible.

For better serviceability, the SRS unit memory stores a DTC that relates to the cause of the malfunction, and the unit is connected to the data link connector (DLC). This information can be read with the HDS when it is connected to the DLC (16P) (see page 24-25).

NOTE: Before you disconnect the negative cable from the battery for troubleshooting, make sure you have the anti-theft code for the audio or the navigation system (if equipped). Write down the XM audio presets (if equipped).

(cont'd)

System Description (cont'd)

SRS Unit Inputs and Outputs at Connector A (28P)

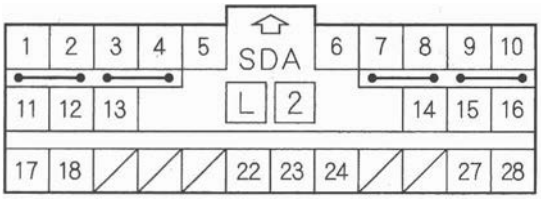

Wire side of female terminals

Terminal Number	Wire Color	Terminal Name	Description
1	GRN	LA2+	Power source for driver's airbag second inflator
2	PUR	LA2−	Ground for driver's airbag second inflator
3	LT GRN	RA2+	Power source for passenger's airbag second inflator
4	LT BLU	RA2−	Ground for passenger's airbag second inflator
5	LT GRN	MES	Memory delete signal input
6	BRN	SCS	Service check signal input
7	LT BLU	LA1+	Power source for driver's airbag first inflator
8	BRN	LA1−	Ground for driver's airbag first inflator
9	YEL	RA1+	Power source for passenger's airbag first inflator
10	BLU	RA1−	Ground for passenger's airbag first inflator
11	WHT	CAN HI	Sends and receives communication signal with the gauge control module
12	RED	CAN LO	Sends and receives communication signal with the gauge control module
13	BLU	PTT	Passenger's airbag cutoff indicator output line
14	PNK	ODS	Sends and receives communication signal with the ODS unit
15	BRN	LFS−	Ground for left front impact sensor
16	LT BLU	RFS−	Ground for right front impact sensor
17	WHT	VA	SRS system sub power (common with ODS)
18	RED	VB	SRS dedicated power (dedicated booster circuit)
19	———	Not used	———
20	———	Not used	———
21	———	Not used	———
22	BLK	SRS GND (1)	Ground circuit for the SRS (G505)
23	BLK	SRS GND (2)	Ground circuit for the SRS (G505)
24	LT BLU	K-LINE	Sends and receives scan tool signal (serial data)
25	———	Not used	———
26	———	Not used	———
27	RED	LFS+	Power source for left front impact sensor
28	GRN	RFS+	Power source for right front impact sensor

NOTE: BLU or BRN wires may be substituted for the wire colors in this table.

SRS Unit Inputs and Outputs at Connector B (28P)

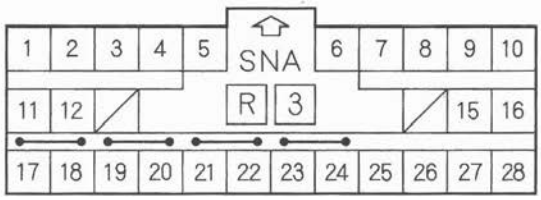

Wire side of female terminals

Terminal Number	Wire Color	Terminal Name	Description
1	RED	LRP+	Power source for driver's seat belt tensioner
2	BRN	LRP−	Ground for driver's seat belt tensioner
3	GRN	RRP+	Power source for front passenger's seat belt tensioner
4	LT BLU	RRP−	Ground for front passenger's seat belt tensioner
5	GRY	SS−	Ground for driver's seat position sensor
6	LT GRN	SS+	Power source for driver's seat position sensor
7	ORN	LBP+	Power source for driver's buckle tensioner
8	GRN	LBP−	Ground for driver's buckle tensioner
9	YEL	RBP+	Power source for front passenger's buckle tensioner
10	PNK	RBP−	Ground for front passenger's buckle tensioner
11	YEL	LBSC	Driver's seat belt buckle switch unbuckled signal
12	PNK	LBSO	Driver's seat belt buckle switch buckled signal
13	———	Not used	———
14	———	Not used	———
15	BLU	RBSC	Front passenger's seat belt buckle switch unbuckled signal
16	LT BLU	RBSO	Front passenger's seat belt buckle switch buckled signal
17	LT BLU	LSA+	Power source for driver's side airbag inflator
18	RED	LSA−	Ground for driver's side airbag inflator
19	WHT	RSA+	Power source for front passenger's side airbag inflator
20	ORN	RSA−	Ground for front passenger's side airbag inflator
21	BRN	LCA1+	Power source for left side curtain airbag inflator
22	BLU	LCA1−	Ground for left side curtain airbag inflator
23	GRY	RCA1+	Power source for right side curtain airbag inflator
24	RED	RCA1−	Ground for right side curtain airbag inflator
25	PNK	LBS1+	Power source for left side impact sensor (first), left side impact sensor (second)
26	GRY	LBS1−	Ground for left side impact sensor (first), left side impact sensor (second)
27	BRN	RBS1+	Power source for right side impact sensor (first), right side impact sensor (second)
28	LT GRN	RBS1−	Ground for right side impact sensor (first), right side impact sensor (second)

NOTE: BLU or BRN wires may be substituted for the wire colors in this table.

Circuit Diagram

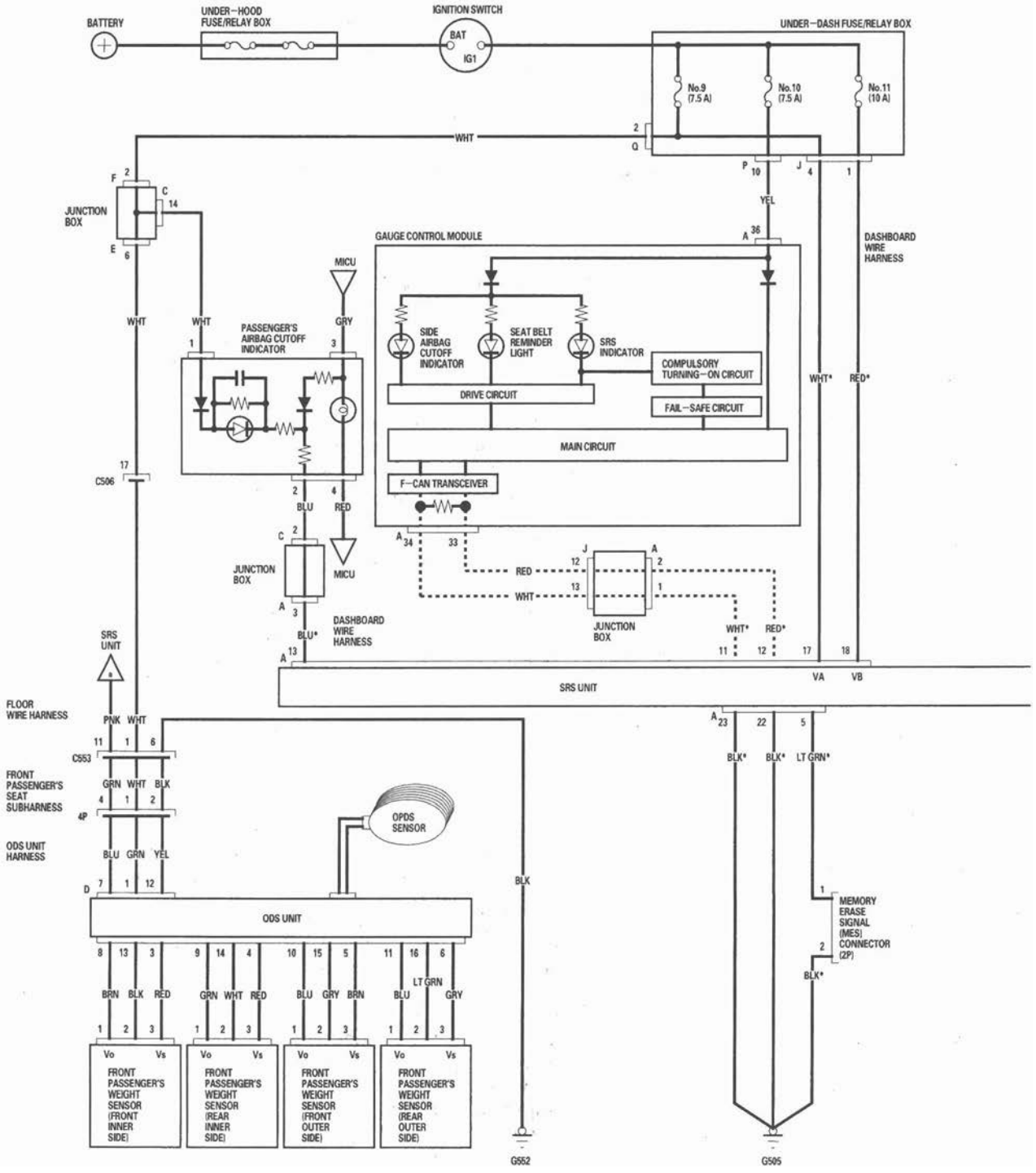

BLUE or BROWN
wire color can be used
for the SRS circuits
that have a * mark
- - - - - - - - - - : CAN line
. . . . . : Other communication line

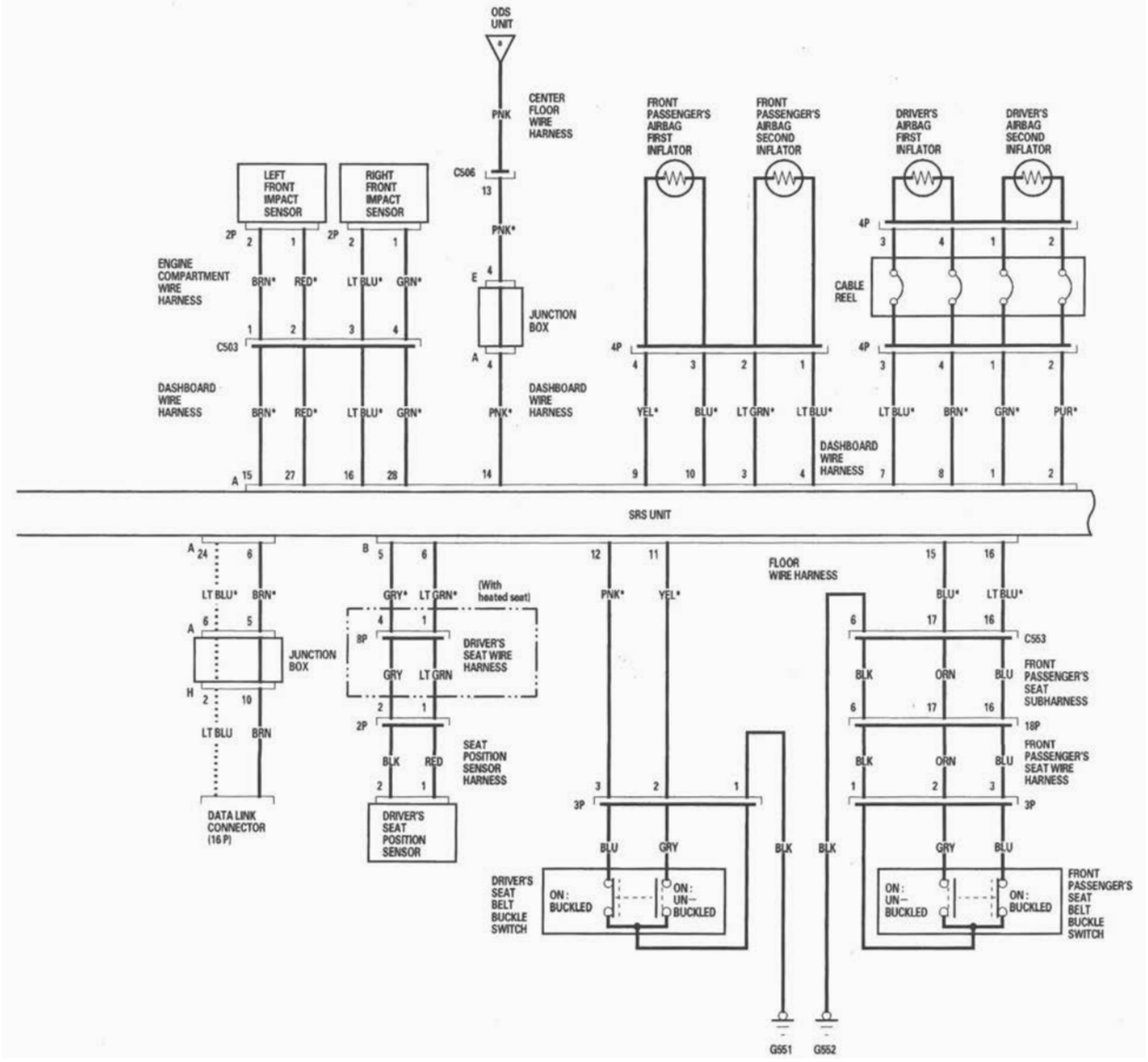

(cont'd)

Circuit Diagram (cont'd)

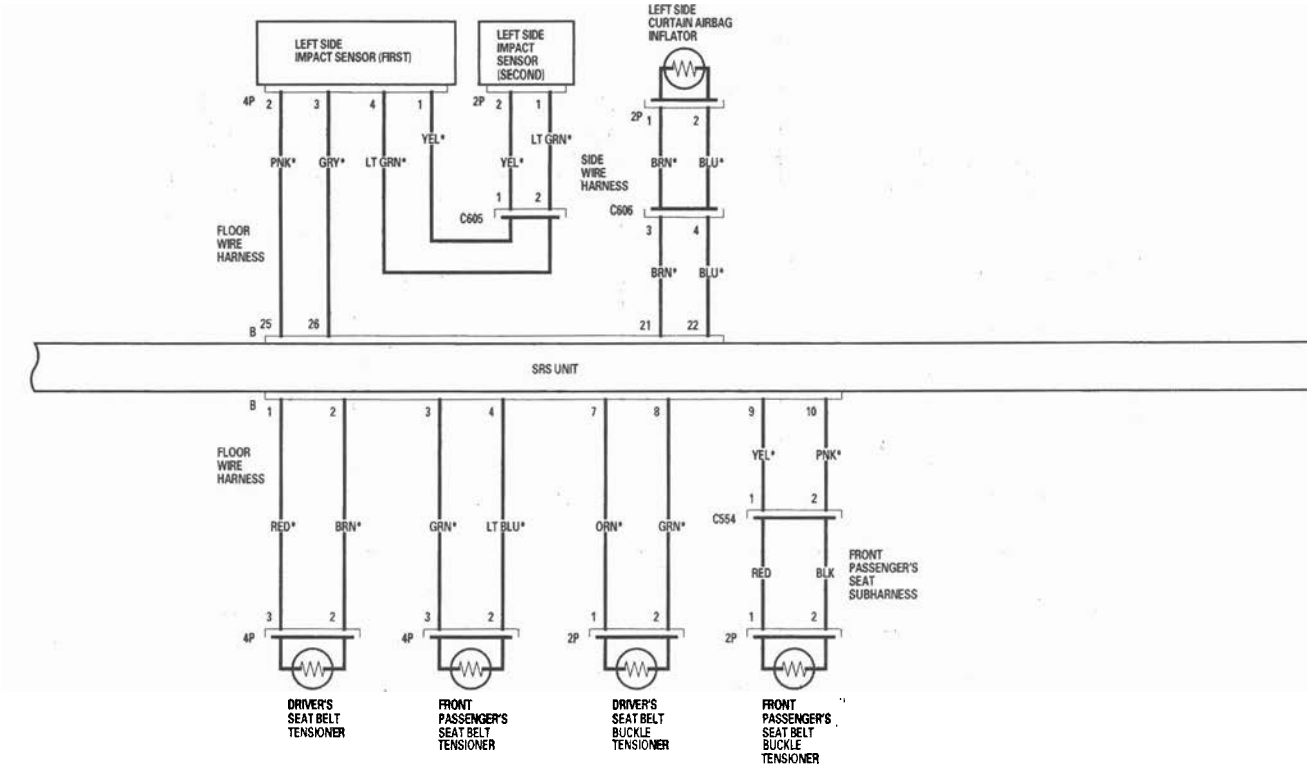

BLUE or BROWN
wire color can be used
for the SRS circuits
that have a * mark

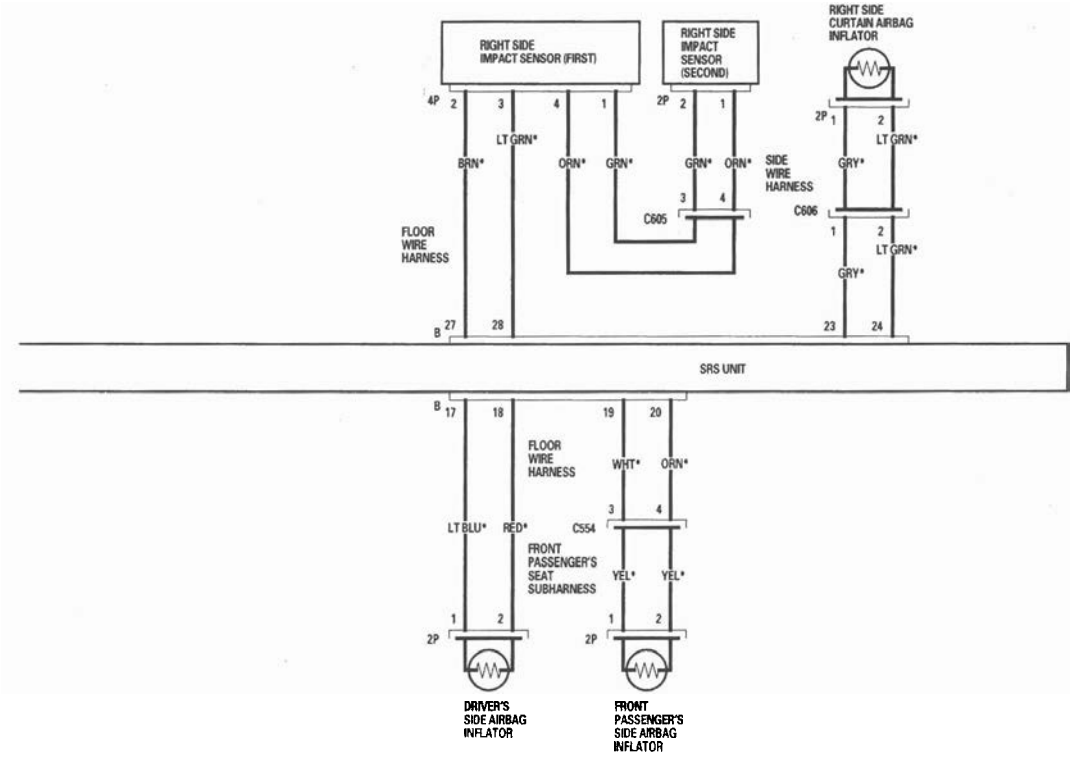

DTC Troubleshooting

DTC 11-1x ("x" can be 0 thru 9 or A thru F):
Open or Increased Resistance in Driver's Airbag First Inflator

DTC 11-4x ("x" can be 0 thru 9 or A thru F):
Open or Increased Resistance in Driver's Airbag Second Inflator

Special Tools Required
- SRS inflator simulator 07SAZ-TB4011A
- SRS simulator lead J 070AZ-SNAA100

NOTE: Before doing this troubleshooting procedure, review SRS Precautions and Procedures (see page 24-15).

1. Erase the DTC memory (see page 24-26).
2. Turn the ignition switch ON (II), and check that the SRS indicator comes on for about 6 seconds and then goes off.

   Does the SRS indicator stay on, and is DTC 11-1x or 11-4x indicated?

   YES—Go to step 3.

   NO—Intermittent failure, the system is OK at this time. Go to Troubleshooting Intermittent Failures (see page 24-27). If another DTC is indicated, go to the DTC Troubleshooting Index.
3. Turn the ignition switch OFF. Disconnect the negative cable from the battery, and wait for 3 minutes.
4. Disconnect the driver's airbag 4P connector (A) from the cable reel.

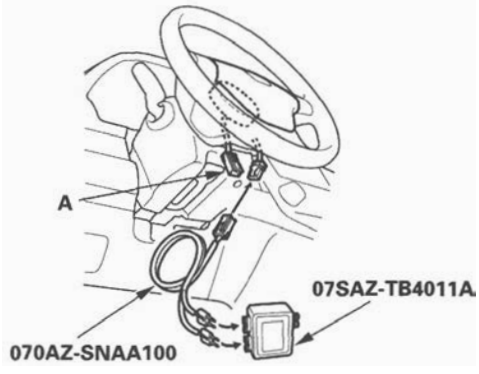

5. Connect the SRS inflator simulator (2 Ω connectors) and simulator lead J to the cable reel.
6. Reconnect the negative cable to the battery.
7. Erase the DTC memory.
8. Read the DTC (see page 24-25).

   Is DTC 11-1x or 11-4x indicated?

   YES—Go to step 9.

   NO—Open or increased resistance in the driver's airbag first or second inflator; replace the driver's airbag (see page 24-161). ■
9. Turn the ignition switch OFF. Disconnect the negative cable from the battery, and wait for 3 minutes.
10. Disconnect the dashboard wire harness 4P connector (A) from the cable reel.

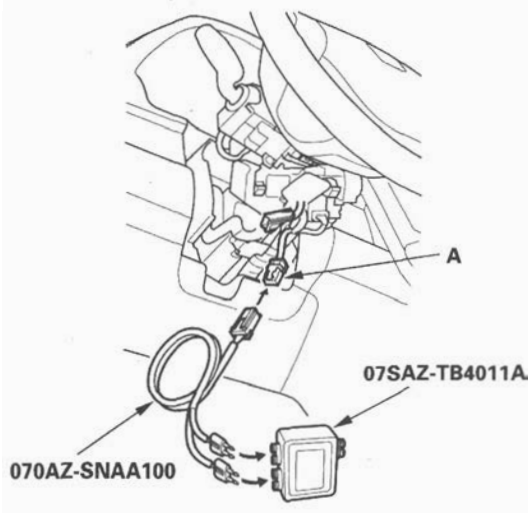

11. Connect the SRS inflator simulator (2 Ω connectors) and the simulator lead to the dashboard wire harness.
12. Reconnect the negative cable to the battery.
13. Erase the DTC memory.

14. Read the DTC.

    Is DTC 11-1x or 11-4x indicated?

    YES—Go to step 15.

    NO—Open or increased resistance in the cable reel; replace the cable reel (see page 24-173).■

15. Turn the ignition switch OFF. Disconnect the negative cable from the battery, and wait for 3 minutes.

16. Disconnect SRS unit connector A (28P) from the SRS unit (see step 9 on page 24-24).

17. Disconnect the SRS inflator simulator from the SRS simulator lead. Do not disconnect the simulator lead from the dashboard wire harness 4P connector.

18. Check resistance between the terminals of both SRS simulator leads. There should be 1 Ω or less.

DASHBOARD WIRE HARNESS 4P CONNECTOR

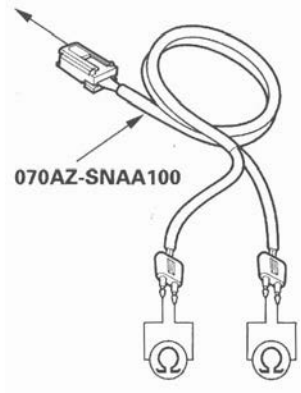

Is the resistance as specified?

YES—Faulty SRS unit or poor connection at SRS unit connector A (28P) and the SRS unit. Check the connection between the connector and the SRS unit. If the connection is OK, replace the SRS unit (see page 24-176).■

NO—Open or increased resistance in the dashboard wire harness; replace the dashboard wire harness.■

DTC 11-3x ("x" can be 0 thru 9 or A thru F): Short to Another Wire or Decreased Resistance in Driver's Airbag First Inflator

DTC 11-6x ("x" can be 0 thru 9 or A thru F): Short to Another Wire or Decreased Resistance in Driver's Airbag Second Inflator

Special Tools Required
- SRS inflator simulator 07SAZ-TB4011A
- SRS simulator lead J 070AZ-SNAA100
- SRS short canceller 070AZ-SAA0100

NOTE: Before doing this troubleshooting procedure, review SRS Precautions and Procedures (see page 24-15).

1. Erase the DTC memory (see page 24-26).

2. Turn the ignition switch ON (II), and check that the SRS indicator comes on for about 6 seconds and then goes off.

   Does the SRS indicator stay on, and is DTC 11-3x or 11-6x indicated?

   YES—Go to step 3.

   NO—Intermittent failure, the system is OK at this time. Go to Troubleshooting Intermittent Failures (see page 24-27). If another DTC is indicated, go to the DTC Troubleshooting Index.

3. Turn the ignition switch OFF. Disconnect the negative cable from the battery, and wait for 3 minutes.

4. Disconnect the driver's airbag 4P connector (A) from the cable reel.

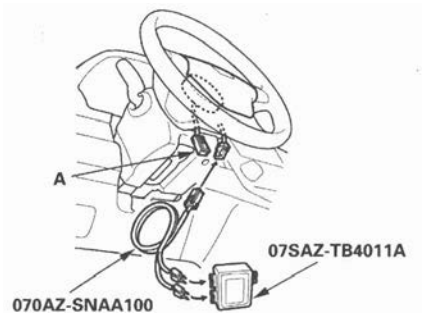

5. Connect the SRS inflator simulator (2 Ω connectors) and simulator lead J to the cable reel.

(cont'd)

DTC Troubleshooting (cont'd)

6. Reconnect the negative cable to the battery.
7. Erase the DTC memory.
8. Read the DTC (see page 24-25).

   Is DTC 11-3x or 11-6x indicated?

   YES—Go to step 9.

   NO—Short in the driver's airbag first or second inflator; replace the driver's airbag (see page 24-161).■
9. Turn the ignition switch OFF. Disconnect the negative cable from the battery, and wait for 3 minutes.
10. Disconnect dashboard wire harness 4P connector (A) from the cable reel.

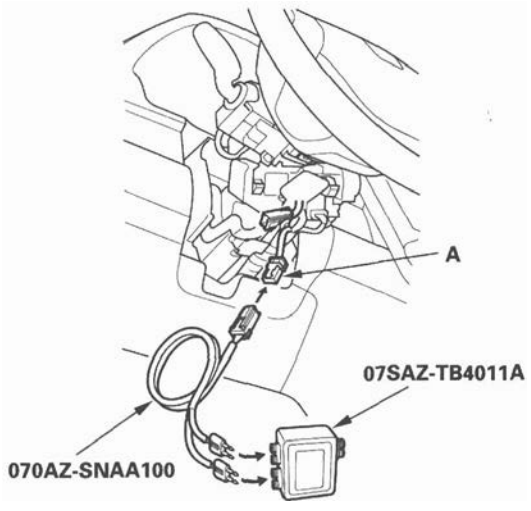

11. Connect the SRS inflator simulator (2 Ω connectors) and the simulator lead to the dashboard wire harness.
12. Reconnect the negative cable to the battery.
13. Erase the DTC memory.
14. Read the DTC.

    Is DTC 11-3x or 11-6x indicated?

    YES—Go to step 15.

    NO—Short in the cable reel; replace the cable reel (see page 24-173).■
15. Turn the ignition switch OFF. Disconnect the negative cable from the battery, and wait for 3 minutes.
16. Disconnect SRS unit connector A (28P) from the SRS unit (see step 9 on page 24-24).
17. Disconnect the SRS inflator simulator from the SRS simulator lead. Do not disconnect the simulator lead from the dashboard wire harness 4P connector.
18. Connect a SRS short canceller (070AZ-SAA0100) to No. 7 and No. 8 terminals and No. 1 and No. 2 terminals of the SRS unit connector A (28P) (see page 24-20).
19. Check resistance between the terminals of both SRS simulator leads. There should be an open circuit (ohmmeter reads OL) or at least 1 MΩ.

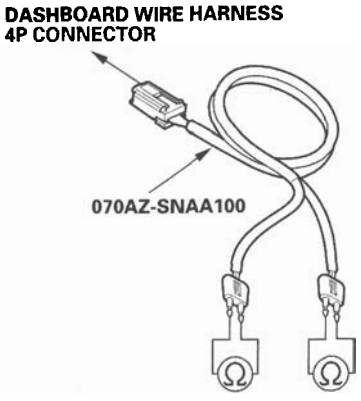

Is the resistance as specified?

YES—Faulty SRS unit or poor connection at SRS unit connector A (28P) and the SRS unit. Check the connection between the connector and the SRS unit. If the connection is OK, replace the SRS unit (see page 24-176).■

NO—Short in the dashboard wire harness; replace the dashboard wire harness.■

DTC 11-8x ("x" can be 0 thru 9 or A thru F): Short to Power in Driver's Airbag First Inflator

DTC 11-Ax ("x" can be 0 thru 9 or A thru F): Short to Power in Driver's Airbag Second Inflator

Special Tools Required
- SRS inflator simulator 07SAZ-TB4011A
- SRS simulator lead J 070AZ-SNAA100

NOTE: Before doing this troubleshooting procedure, review SRS Precautions and Procedures (see page 24-15).

1. Erase the DTC memory (see page 24-26).
2. Turn the ignition switch ON (II), and check that the SRS indicator comes on for about 6 seconds and then goes off.

   Does the SRS indicator stay on, and is DTC 11-8x or 11-Ax indicated?

   YES—Go to step 3.

   NO—Intermittent failure, the system is OK at this time. Go to Troubleshooting Intermittent Failures (see page 24-27). If another DTC is indicated, go to the DTC Troubleshooting Index.
3. Turn the ignition switch OFF. Disconnect the negative cable from the battery, and wait for 3 minutes.
4. Disconnect the driver's airbag 4P connector (A) from the cable reel.

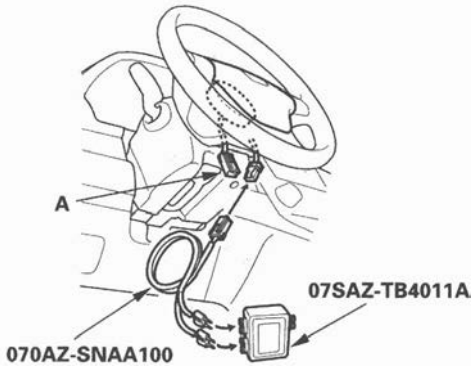

5. Connect the SRS inflator simulator (2 Ω connectors) and simulator lead J to the cable reel.
6. Reconnect the negative cable to the battery.
7. Erase the DTC memory.
8. Read the DTC (see page 24-25).

   Is DTC 11-8x or 11-Ax indicated?

   YES—Go to step 9.

   NO—Short to power in the driver's airbag first or second inflator; replace the driver's airbag (see page 24-161). ■
9. Turn the ignition switch OFF. Disconnect the negative cable from the battery, and wait for 3 minutes.
10. Disconnect the dashboard wire harness 4P connector (A) from the cable reel.

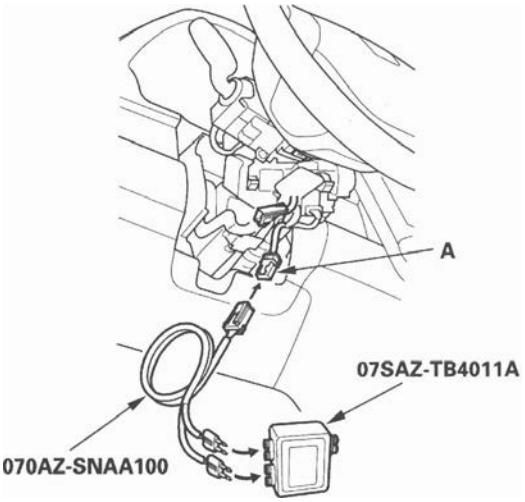

11. Connect the SRS inflator simulator (2 Ω connectors) and the simulator lead to the dashboard wire harness.
12. Reconnect the negative cable to the battery.
13. Erase the DTC memory.

(cont'd)

DTC Troubleshooting (cont'd)

14. Read the DTC.

    Is DTC 11-8x or 11-Ax indicated?

    YES—Go to step 15.

    NO—Short to power in the cable reel; replace the cable reel (see page 24-173).■

15. Turn the ignition switch OFF. Disconnect the negative cable from the battery, and wait for 3 minutes.

16. Disconnect SRS unit connector A (28P) from the SRS unit (see step 9 on page 24-24).

17. Disconnect the SRS inflator simulator from the SRS simulator lead. Do not disconnect the simulator lead from the dashboard wire harness 4P connector.

18. Reconnect the negative cable to the battery.

19. Turn the ignition switch ON (II).

20. Check for voltage between each terminal of the SRS simulator lead and body ground. There should be 0.2 V or less.

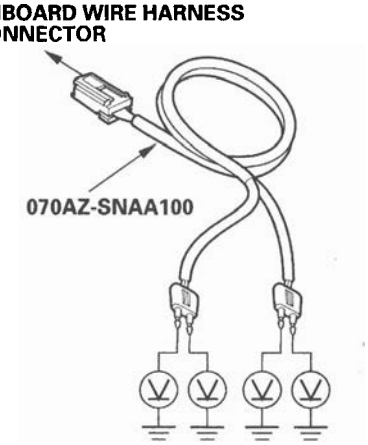

Is the voltage as specified?

YES—Faulty SRS unit or poor connection at SRS unit connector A (28P) and the SRS unit. Check the connection between the connector and the SRS unit. If the connection is OK, replace the SRS unit (see page 24-176).■

NO—Short to power in the dashboard wire harness; replace the dashboard wire harness.■

DTC 11-9x ("x" can be 0 thru 9 or A thru F): Short to Ground in Driver's Airbag First Inflator

DTC 11-Bx ("x" can be 0 thru 9 or A thru F): Short to Ground in Driver's Airbag Second Inflator

Special Tools Required
- SRS inflator simulator 07SAZ-TB4011A
- SRS simulator lead J 070AZ-SNAA100

NOTE: Before doing this troubleshooting procedure, review SRS Precautions and Procedures (see page 24-15).

1. Erase the DTC memory (see page 24-26).

2. Turn the ignition switch ON (II), and check that the SRS indicator comes on for about 6 seconds and then goes off.

   Does the SRS indicator stay on, and is DTC 11-9x or 11-Bx indicated?

   YES—Go to step 3.

   NO—Intermittent failure, the system is OK at this time. Go to Troubleshooting Intermittent Failures (see page 24-27). If another DTC is indicated, go to the DTC Troubleshooting Index.

3. Turn the ignition switch OFF. Disconnect the negative cable from the battery, and wait for 3 minutes.

4. Disconnect the driver's airbag 4P connector (A) from the cable reel.

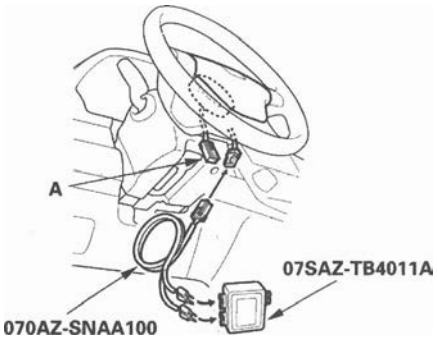

5. Connect the SRS inflator simulator (2 Ω connectors) and simulator lead J to the cable reel.

6. Reconnect the negative cable to the battery.

7. Erase the DTC memory.

8. Read the DTC (see page 24-25).

   Is DTC 11-9x or 11-Bx indicated?

   YES—Go to step 9.

   NO—Short to ground in the driver's airbag first or second inflator; replace the driver's airbag (see page 24-161).■

9. Turn the ignition switch OFF. Disconnect the negative cable from the battery, and wait for 3 minutes.

10. Disconnect the dashboard wire harness 4P connector (A) from the cable reel.

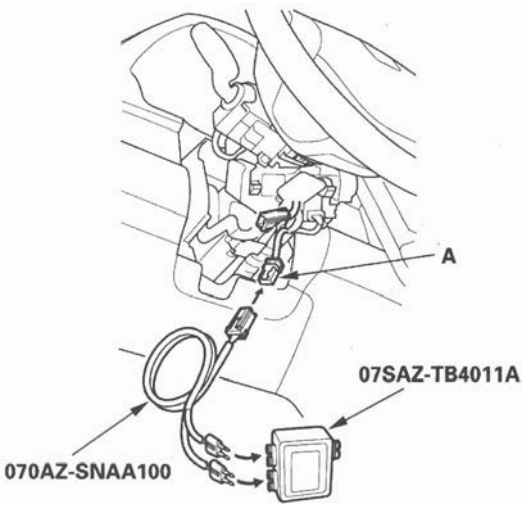

11. Connect the SRS inflator simulator (2 Ω connectors) and the simulator lead to the dashboard wire harness.

12. Reconnect the negative cable to the battery.

13. Erase the DTC memory.

14. Read the DTC.

    Is DTC 11-9x or 11-Bx indicated?

    YES—Go to step 15.

    NO—Short to ground in the cable reel; replace the cable reel (see page 24-173).■

15. Turn the ignition switch OFF. Disconnect the negative cable from the battery, and wait for 3 minutes.

16. Disconnect SRS unit connector A (28P) from the SRS unit (see step 9 on page 24-24).

17. Disconnect the SRS inflator simulator from the SRS simulator lead. Do not disconnect the simulator lead from the dashboard wire harness 4P connector.

18. Check resistance between each terminal of the SRS simulator lead and body ground. There should be an open circuit (ohmmeter reads OL) or at least 1 MΩ.

DASHBOARD WIRE HARNESS 4P CONNECTOR

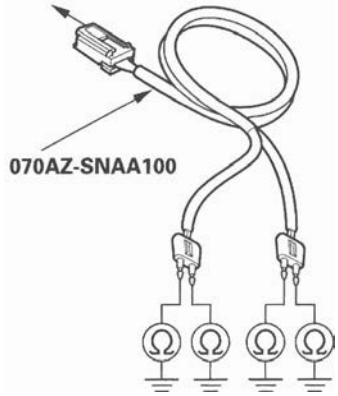

Is the resistance as specified?

YES—Faulty SRS unit or poor connection at SRS unit connector A (28P) and the SRS unit. Check the connection between the connector and the SRS unit. If the connection is OK, replace the SRS unit (see page 24-176).■

NO—Short to ground in the dashboard wire harness; replace the dashboard wire harness.■

DTC Troubleshooting (cont'd)

DTC 12-1x ("x" can be 0 thru 9 or A thru F):
Open or Increased Resistance in Front Passenger's Airbag First Inflator

DTC 12-4x ("x" can be 0 thru 9 or A thru F):
Open or Increased Resistance in Front Passenger's Airbag Second Inflator

Special Tools Required
- SRS inflator simulator 07SAZ-TB4011A
- SRS simulator lead J 070AZ-SNAA100

NOTE: Before doing this troubleshooting procedure, review SRS Precautions and Procedures (see page 24-15).

1. Erase the DTC memory (see page 24-26).
2. Turn the ignition switch ON (II), and check that the SRS indicator comes on for about 6 seconds and then goes off.

   Does the SRS indicator stay on, and is DTC 12-1x or 12-4x indicated?

   YES—Go to step 3.

   NO—Intermittent failure, the system is OK at this time. Go to Troubleshooting Intermittent Failures (see page 24-27). If another DTC is indicated, go to the DTC Troubleshooting Index.
3. Turn the ignition switch OFF. Disconnect the negative cable from the battery, and wait for 3 minutes.
4. Disconnect the front passenger's airbag 4P connector (A) from the dashboard wire harness.

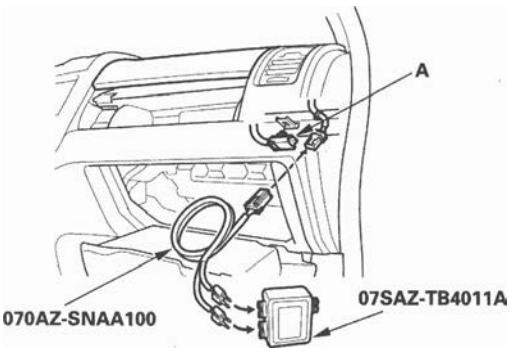

5. Connect the SRS inflator simulator (2 Ω connectors) and simulator lead J to the dashboard wire harness.
6. Reconnect the negative cable to the battery.
7. Erase the DTC memory.
8. Read the DTC (see page 24-25).

   Is DTC 12-1x or 12-4x indicated?

   YES—Go to step 9.

   NO—Open or increased resistance in the front passenger's airbag first or second inflator; replace the front passenger's airbag (see page 24-162). ■
9. Turn the ignition switch OFF. Disconnect the negative cable from the battery, and wait for 3 minutes.
10. Disconnect SRS unit connector A (28P) from the SRS unit (see step 9 on page 24-24).
11. Disconnect the SRS inflator simulator from the SRS simulator lead. Do not disconnect the simulator lead from the dashboard wire harness 4P connector.
12. Check resistance between the terminals of both SRS simulator leads. There should be 1 Ω or less.

DASHBOARD WIRE HARNESS 4P CONNECTOR

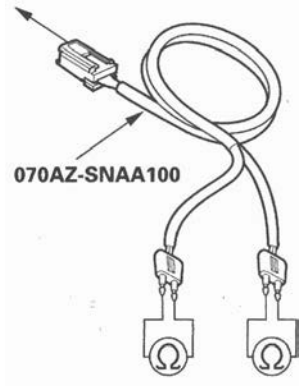

Is the resistance as specified?

YES—Faulty SRS unit or poor connection at SRS unit connector A (28P). Check the connection; if the connection is OK, replace the SRS unit (see page 24-176). ■

NO—Open or increased resistance in the dashboard wire harness; replace the dashboard wire harness. ■

DTC 12-3x ("x" can be 0 thru 9 or A thru F): Short to Another Wire or Decreased Resistance in Front Passenger's Airbag First Inflator

DTC 12-6x ("x" can be 0 thru 9 or A thru F): Short to Another Wire or Decreased Resistance in Front Passenger's Airbag Second Inflator

Special Tools Required
- SRS inflator simulator 07SAZ-TB4011A
- SRS simulator lead J 070AZ-SNAA100
- SRS short canceller 070AZ-SAA0100

NOTE: Before doing this troubleshooting procedure, review SRS Precautions and Procedures (see page 24-15).

1. Erase the DTC memory (see page 24-26).
2. Turn the ignition switch ON (II), and check that the SRS indicator comes on for about 6 seconds and then goes off.

   Does the SRS indicator stay on, and is DTC 12-3x or 12-6x indicated?

   YES—Go to step 3.
   NO—Intermittent failure, the system is OK at this time. Go to Troubleshooting Intermittent Failures (see page 24-27). If another DTC is indicated, go to the DTC Troubleshooting Index.
3. Turn the ignition switch OFF. Disconnect the negative cable from the battery, and wait for 3 minutes.
4. Disconnect the front passenger's airbag 4P connector (A) from the dashboard wire harness.

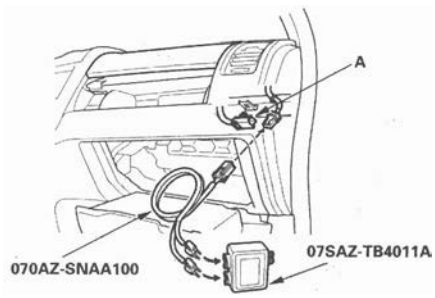

5. Connect the SRS inflator simulator (2 Ω connectors) and simulator lead J to the dashboard wire harness.
6. Reconnect the negative cable to the battery.
7. Erase the DTC memory.
8. Read the DTC (see page 24-25).

   Is DTC 12-3x or 12-6x indicated?

   YES—Go to step 9.
   NO—Short in the front passenger's airbag first or second inflator; replace the front passenger's airbag (see page 24-162). ■
9. Turn the ignition switch OFF. Disconnect the negative cable from the battery, and wait for 3 minutes.
10. Disconnect SRS unit connector A (28P) from the SRS unit (see step 9 on page 24-24).
11. Disconnect the SRS inflator simulator from the SRS simulator lead. Do not disconnect the simulator lead from the dashboard wire harness 4P connector.
12. Connect a SRS short canceller (070AZ-SAA0100) to No. 9 and No. 10 terminals, and the No. 3 and No. 4 terminals of SRS unit connector A (28P) (see page 24-20).
13. Check resistance between the terminals of both SRS simulator leads. There should be an open circuit (ohmmeter reads OL) or at least 1 MΩ.

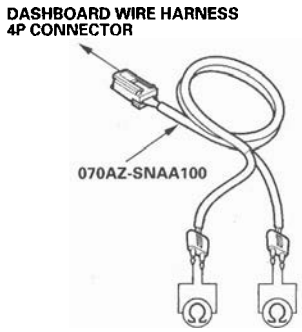

Is the resistance as specified?

YES—Faulty SRS unit or poor connection at SRS unit connector A (28P) and the SRS unit. Check the connection between the connector and the SRS unit. If the connection is OK, replace the SRS unit (see page 24-176). ■
NO—Short in the dashboard wire harness; replace the dashboard wire harness. ■

DTC Troubleshooting (cont'd)

DTC 12-8x ("x" can be 0 thru 9 or A thru F): Short to Power in Front Passenger's Airbag First Inflator

DTC 12-Ax ("x" can be 0 thru 9 or A thru F): Short to Power in Front Passenger's Airbag Second Inflator

Special Tools Required
- SRS inflator simulator 07SAZ-TB4011A
- SRS simulator lead J 070AZ-SNAA100

NOTE: Before doing this troubleshooting procedure, review SRS Precautions and Procedures (see page 24-15).

1. Erase the DTC memory (see page 24-26).
2. Turn the ignition switch ON (II), and check that the SRS indicator comes on for about 6 seconds and then goes off.

   Does the SRS indicator stay on, and is DTC 12-8x or 12-Ax indicated?

   YES—Go to step 3.
   NO—Intermittent failure, the system is OK at this time. Go to Troubleshooting Intermittent Failures (see page 24-27). If another DTC is indicated, go to the DTC Troubleshooting Index.
3. Turn the ignition switch OFF. Disconnect the negative cable from the battery, and wait for 3 minutes.
4. Disconnect the front passenger's airbag 4P connector (A) from the dashboard wire harness.

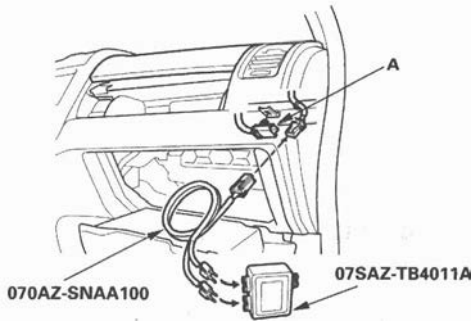

5. Connect the SRS inflator simulator (2 Ω connectors) and simulator lead J to the dashboard wire harness.
6. Reconnect the negative cable to the battery.
7. Erase the DTC memory.
8. Read the DTC (see page 24-25).

   Is DTC 12-8x or 12-Ax indicated?

   YES—Go to step 9.

   NO—Short to power in the front passenger's airbag first or second inflator; replace the front passenger's airbag (see page 24-162).■
9. Turn the ignition switch OFF. Disconnect the negative cable from the battery, and wait for 3 minutes.
10. Disconnect SRS unit connector A (28P) from the SRS unit (see step 9 on page 24-24).
11. Disconnect the SRS inflator simulator from the SRS simulator lead. Do not disconnect the simulator lead from the dashboard wire harness 4P connector.
12. Reconnect the negative cable to the battery.
13. Turn the ignition switch ON (II).
14. Check for voltage between each terminal of the SRS simulator lead and body ground. There should be 0.5 V or less.

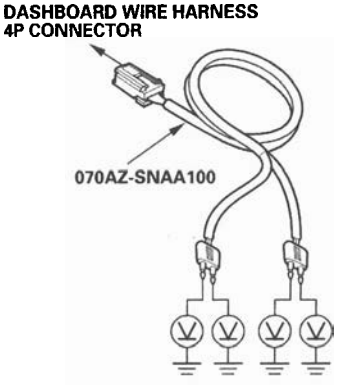

Is the voltage as specified?

YES—Faulty SRS unit or poor connection at SRS unit connector A (28P) and the SRS unit. Check the connection between the connector and the SRS unit. If the connection is OK, replace the SRS unit (see page 24-176).■

NO—Short to power in the dashboard wire harness; replace the dashboard wire harness.■

DTC 12-9x ("x" can be 0 thru 9 or A thru F): Short to Ground in Front Passenger's Airbag First Inflator

DTC 12-Bx ("x" can be 0 thru 9 or A thru F): Short to Ground in Front Passenger's Airbag Second Inflator

Special Tools Required
- SRS inflator simulator 07SAZ-TB4011A
- SRS simulator lead J 070AZ-SNAA100

NOTE: Before doing this troubleshooting procedure, review SRS Precautions and Procedures (see page 24-15).

1. Erase the DTC memory (see page 24-26).
2. Turn the ignition switch ON (II), and check that the SRS indicator comes on for about 6 seconds and then goes off.

   Does the SRS indicator stay on, and is DTC 12-9x or 12-Bx indicated?

   YES—Go to step 3.
   NO—Intermittent failure, the system is OK at this time. Go to Troubleshooting Intermittent Failures (see page 24-27). If another DTC is indicated, go to the DTC Troubleshooting Index.
3. Turn the ignition switch OFF. Disconnect the negative cable from the battery, and wait for 3 minutes.
4. Disconnect the front passenger's airbag 4P connector (A) from the dashboard wire harness.

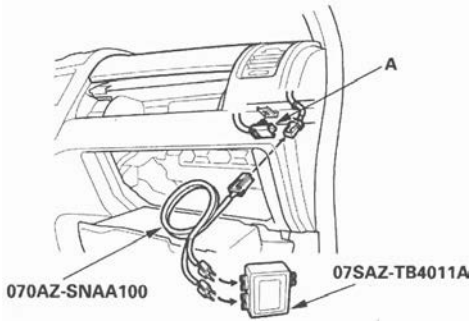

5. Connect the SRS inflator simulator (2 Ω connectors) and simulator lead J to the dashboard wire harness.
6. Reconnect the negative cable to the battery.
7. Erase the DTC memory.
8. Read the DTC (see page 24-25).

   Is DTC 12-9x or 12-Bx indicated?

   YES—Go to step 9.

   NO—Short to ground in the front passenger's airbag first or second inflator; replace the front passenger's airbag (see page 24-162).■
9. Turn the ignition switch OFF. Disconnect the negative cable from the battery, and wait for 3 minutes.
10. Disconnect SRS unit connector A (28P) from the SRS unit (see step 9 on page 24-24).
11. Disconnect the SRS inflator simulator from the SRS simulator lead. Do not disconnect the simulator lead from the dashboard wire harness 4P connector.
12. Check resistance between each terminal of the SRS simulator lead and body ground. There should be an open circuit (ohmmeter reads OL) or at least 1 MΩ.

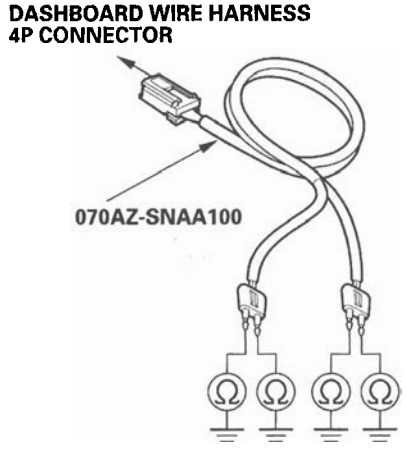

Is the resistance as specified?

YES—Faulty SRS unit or poor connection at SRS unit connector A (28P) and the SRS unit. Check the connection between the connector and the SRS unit. If the connection is OK, replace the SRS unit (see page 24-176).■

NO—Short to ground in the dashboard wire harness; replace the dashboard wire harness.■

DTC Troubleshooting (cont'd)

DTC 21-1x ("x" can be 0 thru 9 or A thru F): Open or Increased Resistance in Driver's Seat Belt Tensioner

Special Tools Required
- SRS inflator simulator 07SAZ-TB4011A
- SRS simulator lead K 070AZ-SNAA200

NOTE: Before doing this troubleshooting procedure, review SRS Precautions and Procedures (see page 24-15).

1. Erase the DTC memory (see page 24-26).
2. Turn the ignition switch ON (II), and check that the SRS indicator comes on for about 6 seconds and then goes off.

   Does the SRS indicator stay on, and is DTC 21-1x indicated?

   YES—Go to step 3.

   NO—Intermittent failure, the system is OK at this time. Go to Troubleshooting Intermittent Failures (see page 24-27). If another DTC is indicated, go to the DTC Troubleshooting Index.
3. Turn the ignition switch OFF. Disconnect the negative cable from the battery, and wait for 3 minutes.
4. Disconnect the floor wire harness 4P connector (A) from the driver's seat belt tensioner.

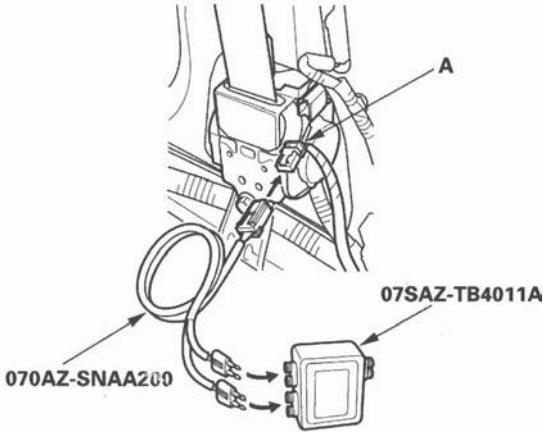

5. Connect the SRS inflator simulator (2 Ω connectors) and simulator lead K to the floor wire harness.
6. Reconnect the negative cable to the battery.
7. Erase the DTC memory.
8. Read the DTC (see page 24-25).

   Is DTC 21-1x indicated?

   YES—Go to step 9.

   NO—Open or increased resistance in the driver's seat belt tensioner; replace the driver's seat belt (see page 24-4).■
9. Turn the ignition switch OFF. Disconnect the negative cable from the battery, and wait for 3 minutes.
10. Disconnect both seat belt buckle tensioner 4P connectors (see step 8 on page 24-24) and the front passenger's seat belt tensioner 4P connector (see step 7 on page 24-24).
11. Disconnect SRS unit connector B (28P) from the SRS unit (see step 9 on page 24-24).
12. Check resistance between the No. 1 and the No. 2 terminals of SRS unit connector B (28P). There should be 2.0—3.0 Ω.

SRS UNIT CONNECTOR B (28P)

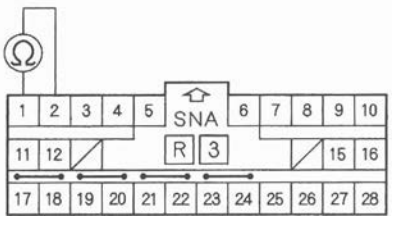

Wire side of female terminals

Is the resistance as specified?

YES—Faulty SRS unit or poor connection at SRS unit connector B (28P) and the SRS unit. Check the connection; if the connection is OK, replace the SRS unit (see page 24-176).■

NO—Open or increased resistance in the floor wire harness; replace the floor wire harness.■

DTC 21-3x ("x" can be 0 thru 9 or A thru F): Short to Another Wire or Decreased Resistance in Driver's Seat Belt Tensioner

Special Tools Required
- SRS inflator simulator 07SAZ-TB4011A
- SRS simulator lead K 070AZ-SNAA200

NOTE: Before doing this troubleshooting procedure, review SRS Precautions and Procedures (see page 24-15).

1. Erase the DTC memory (see page 24-26).
2. Turn the ignition switch ON (II), and check that the SRS indicator comes on for about 6 seconds and then goes off.

   Does the SRS indicator stay on, and is DTC 21-3x indicated?

   YES—Go to step 3.

   NO—Intermittent failure, the system is OK at this time. Go to Troubleshooting Intermittent Failures (see page 24-27). If another DTC is indicated, go to the DTC Troubleshooting Index.
3. Turn the ignition switch OFF. Disconnect the negative cable from the battery, and wait for 3 minutes.
4. Disconnect the floor wire harness 4P connector (A) from the driver's seat belt tensioner.

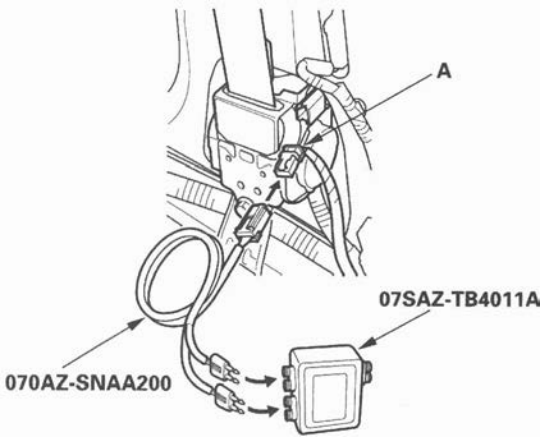

5. Connect the SRS inflator simulator (2 Ω connectors) and simulator lead K to the floor wire harness.
6. Reconnect the negative cable to the battery.
7. Erase the DTC memory.
8. Read the DTC (see page 24-25).

   Is DTC 21-3x indicated?

   YES—Go to step 9.

   NO—Short in the driver's seat belt tensioner; replace the driver's seat belt (see page 24-4).■
9. Turn the ignition switch OFF. Disconnect the negative cable from the battery, and wait for 3 minutes.
10. Disconnect both seat belt buckle tensioner 4P connectors (see step 8 on page 24-24) and the front passenger's seat belt tensioner 4P connector (see step 7 on page 24-24).
11. Disconnect SRS unit connector B (28P) from the SRS unit (see step 9 on page 24-24).
12. Disconnect the simulator lead from the floor wire harness.
13. Check resistance between the No. 1 and the No. 2 terminals of SRS unit connector B (28P). There should be an open circuit (ohmmeter reads OL) or at least 1 MΩ.

SRS UNIT CONNECTOR B (28P)

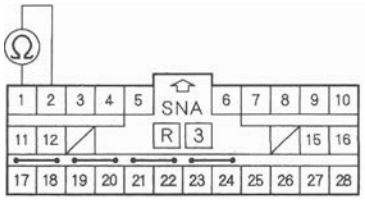

Wire side of female terminals

Is the resistance as specified?

YES—Faulty SRS unit or poor connection at SRS unit connector B (28P) and the SRS unit. Check the connection; if the connection is OK, replace the SRS unit (see page 24-176).■

NO—Short in the floor wire harness; replace the floor wire harness.■

DTC Troubleshooting (cont'd)

DTC 21-8x ("x" can be 0 thru 9 or A thru F): Short to Power in Driver's Seat Belt Tensioner

Special Tools Required
- SRS inflator simulator 07SAZ-TB4011A
- SRS simulator lead K 070AZ-SNAA200

NOTE: Before doing this troubleshooting procedure, review SRS Precautions and Procedures (see page 24-15).

1. Erase the DTC memory (see page 24-26).
2. Turn the ignition switch ON (II), and check that the SRS indicator comes on for about 6 seconds and then goes off.

   Does the SRS indicator stay on, and is DTC 21-8x indicated?

   YES—Go to step 3.

   NO—Intermittent failure, the system is OK at this time. Go to Troubleshooting Intermittent Failures (see page 24-27). If another DTC is indicated, go to the DTC Troubleshooting Index.
3. Turn the ignition switch OFF. Disconnect the negative cable from the battery, and wait for 3 minutes.
4. Disconnect the floor wire harness 4P connector (A) from the driver's seat belt tensioner.

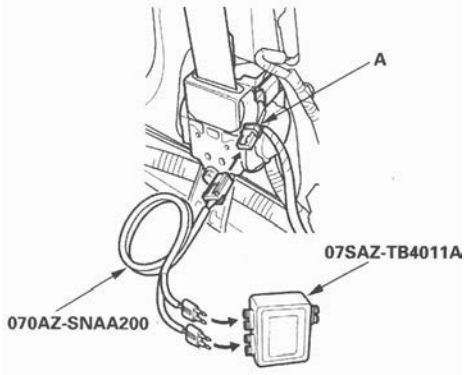

5. Connect the SRS inflator simulator (2 Ω connectors) and simulator lead K to the floor wire harness.
6. Reconnect the negative cable to the battery.
7. Erase the DTC memory.
8. Read the DTC (see page 24-25).

   Is DTC 21-8x indicated?

   YES—Go to step 9.

   NO—Short to power in the driver's seat belt tensioner; replace the driver's seat belt (see page 24-4). ■
9. Turn the ignition switch OFF. Disconnect the negative cable from the battery, and wait for 3 minutes.
10. Disconnect both seat belt buckle tensioner 4P connectors (see step 8 on page 24-24) and the front passenger's seat belt tensioner 4P connector (see step 7 on page 24-24).
11. Disconnect SRS unit connector B (28P) from the SRS unit (see step 9 on page 24-24).
12. Disconnect the simulator lead from the floor wire harness.
13. Reconnect the negative cable to the battery.
14. Turn the ignition switch ON (II).
15. Check for voltage between the No. 1 terminal of SRS unit connector B (28P) and body ground, and between the No. 2 terminal and body ground. There should be 0.5 V or less.

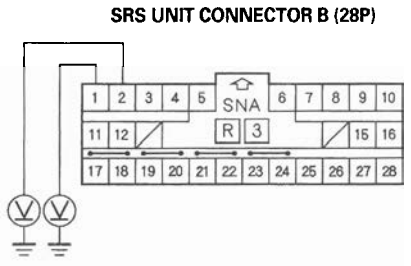

Is the voltage as specified?

YES—Faulty SRS unit or poor connection at SRS unit connector B (28P) and the SRS unit. Check the connection; if the connection is OK, replace the SRS unit (see page 24-176). ■

NO—Short to power in the floor wire harness; replace the floor wire harness. ■

DTC 21-9x ("x" can be 0 thru 9 or A thru F): Short to Ground in Driver's Seat Belt Tensioner

Special Tools Required
- SRS inflator simulator 07SAZ-TB4011A
- SRS simulator lead K 070AZ-SNAA200

NOTE: Before doing this troubleshooting procedure, review SRS Precautions and Procedures (see page 24-15).

1. Erase the DTC memory (see page 24-26).
2. Turn the ignition switch ON (II), and check that the SRS indicator comes on for about 6 seconds and then goes off.

   Does the SRS indicator stay on, and is DTC 21-9x indicated?

   YES—Go to step 3.

   NO—Intermittent failure, the system is OK at this time. Go to Troubleshooting Intermittent Failures (see page 24-27). If another DTC is indicated, go to the DTC Troubleshooting Index.
3. Turn the ignition switch OFF. Disconnect the negative cable from the battery, and wait for 3 minutes.
4. Disconnect the floor wire harness 4P connector (A) from the driver's seat belt tensioner.

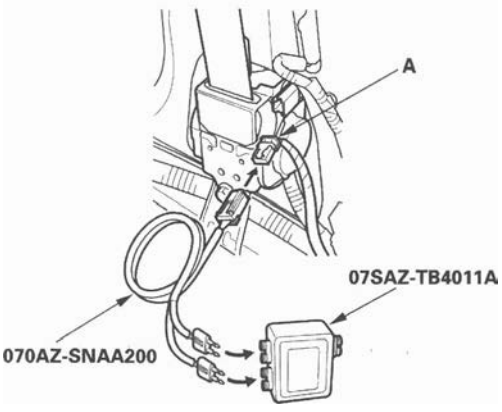

5. Connect the SRS inflator simulator (2 Ω connectors) and simulator lead K to the floor wire harness.
6. Reconnect the negative cable to the battery.
7. Erase the DTC memory.
8. Read the DTC (see page 24-25).

   Is DTC 21-9x indicated?

   YES—Go to step 9.

   NO—Short to ground in the driver's seat belt tensioner; replace the driver's seat belt (see page 24-4). ■
9. Turn the ignition switch OFF. Disconnect the negative cable from the battery, and wait for 3 minutes.
10. Disconnect both seat belt buckle tensioner 4P connectors (see step 8 on page 24-24) and the front passenger's seat belt tensioner 4P connector (see step 7 on page 24-24).
11. Disconnect SRS unit connector B (28P) from the SRS unit (see step 9 on page 24-24).
12. Disconnect the simulator lead from the floor wire harness.
13. Check resistance between the No. 1 terminal of SRS unit connector B (28P) and body ground, and between the No. 2 terminal and body ground. There should be an open circuit (ohmmeter reads OL) or at least 1 MΩ.

SRS UNIT CONNECTOR B (28P)

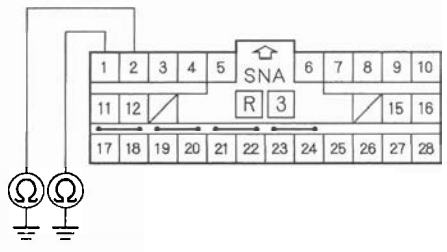

Wire side of female terminals

Is the resistance as specified?

YES—Faulty SRS unit or poor connection at SRS unit connector B (28P) and the SRS unit. Check the connection; if the connection is OK, replace the SRS unit (see page 24-176). ■

NO—Short to ground in the floor wire harness; replace the floor wire harness. ■

DTC Troubleshooting (cont'd)

DTC 22-1x ("x" can be 0 thru 9 or A thru F): Open or Increased Resistance in Front Passenger's Seat Belt Tensioner

Special Tools Required
- SRS inflator simulator 07SAZ-TB4011A
- SRS simulator lead K 070AZ-SNAA200

NOTE: Before doing this troubleshooting procedure, review SRS Precautions and Procedures (see page 24-15).

1. Erase the DTC memory (see page 24-26).
2. Turn the ignition switch ON (II), and check that the SRS indicator comes on for about 6 seconds and then goes off.

   Does the SRS indicator stay on, and is DTC 22-1x indicated?

   YES—Go to step 3.

   NO—Intermittent failure, the system is OK at this time. Go to Troubleshooting Intermittent Failures (see page 24-27). If another DTC is indicated, go to the DTC Troubleshooting Index.
3. Turn the ignition switch OFF. Disconnect the negative cable from the battery, and wait for 3 minutes.
4. Disconnect the floor wire harness 4P connector (A) from the front passenger's seat belt tensioner.

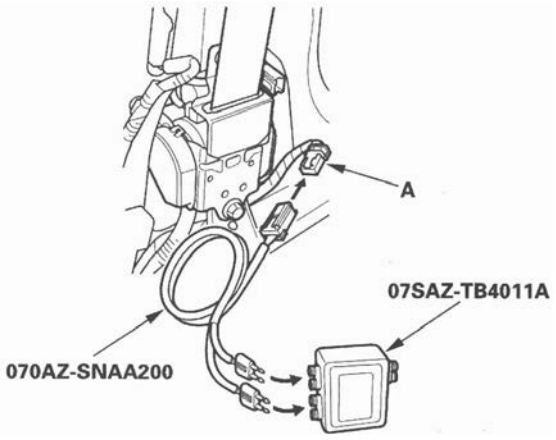

5. Connect the SRS inflator simulator (2 Ω connectors) and simulator lead K to the floor wire harness.
6. Reconnect the negative cable to the battery.
7. Erase the DTC memory.
8. Read the DTC (see page 24-25).

   Is DTC 22-1x indicated?

   YES—Go to step 9.

   NO—Open or increased resistance in the front passenger's seat belt tensioner; replace the front passenger's seat belt (see page 24-4).■
9. Turn the ignition switch OFF. Disconnect the negative cable from the battery, and wait for 3 minutes.
10. Disconnect both seat belt buckle tensioner 4P connectors (see step 8 on page 24-24) and the driver's seat belt tensioner 4P connector (see step 7 on page 24-24).
11. Disconnect SRS unit connector B (28P) from the SRS unit (see step 9 on page 24-24).
12. Check resistance between the No. 3 and the No. 4 terminals of SRS unit connector B (28P). There should be 2.0—3.0 Ω.

SRS UNIT CONNECTOR B (28P)

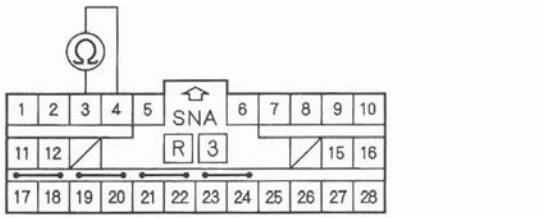

Wire side of female terminals

Is the resistance as specified?

YES—Faulty SRS unit or poor connection at SRS unit connector B (28P) and the SRS unit. Check the connection; if the connection is OK, replace the SRS unit (see page 24-176).■

NO—Open or increased resistance in the floor wire harness; replace the floor wire harness.■

DTC 22-3x ("x" can be 0 thru 9 or A thru F): Short to Another Wire or Decreased Resistance in Front Passenger's Seat Belt Tensioner

Special Tools Required
- SRS inflator simulator 07SAZ-TB4011A
- SRS simulator lead K 070AZ-SNAA200

NOTE: Before doing this troubleshooting procedure, review SRS Precautions and Procedures (see page 24-15).

1. Erase the DTC memory (see page 24-26).
2. Turn the ignition switch ON (II), and check that the SRS indicator comes on for about 6 seconds and then goes off.

   Does the SRS indicator stay on, and is DTC 22-3x indicated?

   YES—Go to step 3.

   NO—Intermittent failure, the system is OK at this time. Go to Troubleshooting Intermittent Failures (see page 24-27). If another DTC is indicated, go to the DTC Troubleshooting Index.
3. Turn the ignition switch OFF. Disconnect the negative cable from the battery, and wait for 3 minutes.
4. Disconnect the floor wire harness 4P connector (A) from the front passenger's seat belt tensioner.

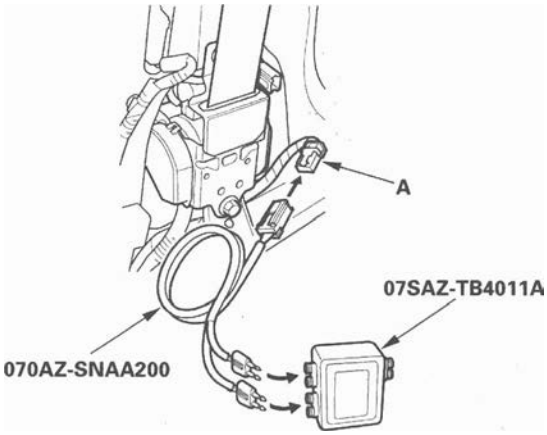

5. Connect the SRS inflator simulator (2 Ω connectors) and simulator lead K to the floor wire harness.
6. Reconnect the negative cable to the battery.
7. Erase the DTC memory.
8. Read the DTC (see page 24-25).

   Is DTC 22-3x indicated?

   YES—Go to step 9.

   NO—Short in the front passenger's seat belt tensioner; replace the front passenger's seat belt (see page 24-4).■
9. Turn the ignition switch OFF. Disconnect the negative cable from the battery, and wait for 3 minutes.
10. Disconnect both seat belt buckle tensioner 4P connectors (see step 8 on page 24-24) and the driver's seat belt tensioner 4P connector (see step 7 on page 24-24).
11. Disconnect SRS unit connector B (28P) from the SRS unit (see step 9 on page 24-24).
12. Disconnect the simulator lead from the floor wire harness.
13. Check resistance between the No. 3 and the No. 4 terminals of SRS unit connector B (28P). There should be an open circuit (ohmmeter reads OL) or at least 1 MΩ.

SRS UNIT CONNECTOR B (28P)

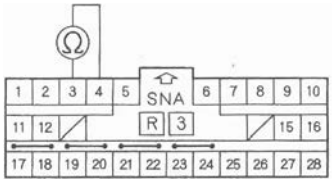

Wire side of female terminals

Is the resistance as specified?

YES—Faulty SRS unit or poor connection at SRS unit connector B (28P) and the SRS unit. Check the connection; if the connection is OK, replace the SRS unit (see page 24-176).■

NO—Short in the floor wire harness; replace the floor wire harness.■

DTC Troubleshooting (cont'd)

DTC 22-8x ("x" can be 0 thru 9 or A thru F): Short to Power in Front Passenger's Seat Belt Tensioner

Special Tools Required
- SRS inflator simulator 07SAZ-TB4011A
- SRS simulator lead K 070AZ-SNAA200

NOTE: Before doing this troubleshooting procedure, review SRS Precautions and Procedures (see page 24-15).

1. Erase the DTC memory (see page 24-26).
2. Turn the ignition switch ON (II), and check that the SRS indicator comes on for about 6 seconds and then goes off.

   Does the SRS indicator stay on, and is DTC 22-8x indicated?

   YES—Go to step 3.

   NO—Intermittent failure, the system is OK at this time. Go to Troubleshooting Intermittent Failures (see page 24-27). If another DTC is indicated, go to the DTC Troubleshooting Index.
3. Turn the ignition switch OFF. Disconnect the negative cable from the battery, and wait for 3 minutes.
4. Disconnect the floor wire harness 4P connector (A) from the front passenger's seat belt tensioner.

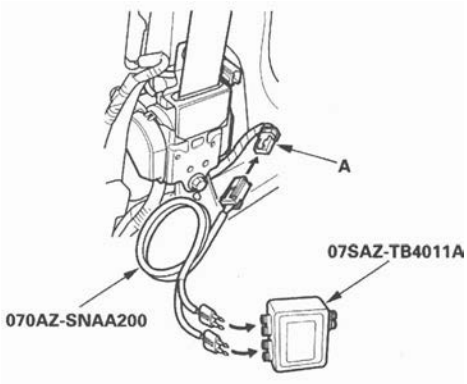

5. Connect the SRS inflator simulator (2 Ω connectors) and simulator lead K to the floor wire harness.
6. Reconnect the negative cable to the battery.
7. Erase the DTC memory.
8. Read the DTC (see page 24-25).

   Is DTC 22-8x indicated?

   YES—Go to step 9.

   NO—Short to power in the front passenger's seat belt tensioner; replace the front passenger's seat belt (see page 24-4).■
9. Turn the ignition switch OFF. Disconnect the negative cable from the battery, and wait for 3 minutes.
10. Disconnect both seat belt buckle tensioner 4P connectors (see step 8 on page 24-24) and the driver's seat belt tensioner 4P connector (see step 7 on page 24-24).
11. Disconnect SRS unit connector B (28P) from the SRS unit (see step 9 on page 24-24).
12. Disconnect the simulator lead from the floor wire harness.
13. Reconnect the negative cable to the battery.
14. Turn the ignition switch ON (II).
15. Check for voltage between the No. 3 terminal of SRS unit connector B (28P) and body ground, and between the No. 4 terminal and body ground. There should be 0.5 V or less.

SRS UNIT CONNECTOR B (28P)

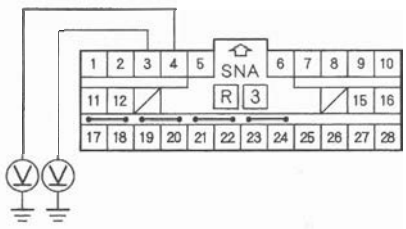

Wire side of female terminals

Is the voltage as specified?

YES—Faulty SRS unit or poor connection at SRS unit connector B (28P) and the SRS unit. Check the connection; if the connection is OK, replace the SRS unit (see page 24-176).■

NO—Short to power in the floor wire harness; replace the floor wire harness.■

DTC 22-9x ("x" can be 0 thru 9 or A thru F): Short to Ground in Front Passenger's Seat Belt Tensioner

Special Tools Required
- SRS inflator simulator 07SAZ-TB4011A
- SRS simulator lead K 070AZ-SNAA200

NOTE: Before doing this troubleshooting procedure, review SRS Precautions and Procedures (see page 24-15).

1. Erase the DTC memory (see page 24-26).
2. Turn the ignition switch ON (II), and check that the SRS indicator comes on for about 6 seconds and then goes off.

   Does the SRS indicator stay on, and is DTC 22-9x indicated?

   YES—Go to step 3.

   NO—Intermittent failure, the system is OK at this time. Go to Troubleshooting Intermittent Failures (see page 24-27). If another DTC is indicated, go to the DTC Troubleshooting Index.
3. Turn the ignition switch OFF. Disconnect the negative cable from the battery, and wait for 3 minutes.
4. Disconnect the floor wire harness 4P connector (A) from the front passenger's seat belt tensioner.

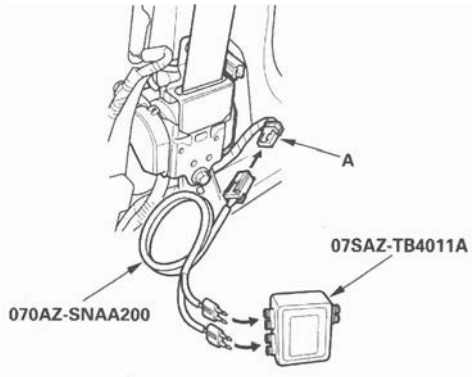

5. Connect the SRS inflator simulator (2 Ω connectors) and simulator lead K to the floor wire harness.
6. Reconnect the negative cable to the battery.
7. Erase the DTC memory.
8. Read the DTC (see page 24-25).

   Is DTC 22-9x indicated?

   YES—Go to step 9.

   NO—Short to ground in the front passenger's seat belt tensioner; replace the front passenger's seat belt (see page 24-4). ■
9. Turn the ignition switch OFF. Disconnect the negative cable from the battery, and wait for 3 minutes.
10. Disconnect both seat belt buckle tensioner 4P connectors (see step 8 on page 24-24) and the driver's seat belt tensioner 4P connector (see step 7 on page 24-24).
11. Disconnect SRS unit connector B (28P) from the SRS unit (see step 9 on page 24-24).
12. Disconnect the simulator lead from the floor wire harness.
13. Check resistance between the No. 3 terminal of SRS unit connector B (28P) and body ground, and between the No. 4 terminal and body ground. There should be an open circuit or (ohmmeter reads OL) at least 1 MΩ.

SRS UNIT CONNECTOR B (28P)

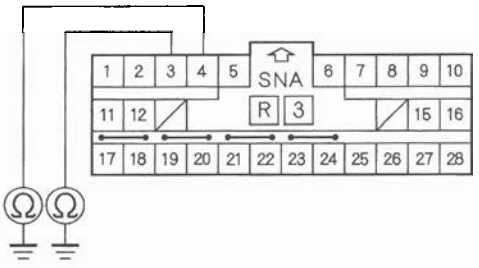

Wire side of female terminals

Is the resistance as specified?

YES—Faulty SRS unit or poor connection at SRS unit connector B (28P) and the SRS unit. Check the connection; if the connection is OK, replace the SRS unit (see page 24-176). ■

NO—Short to ground in the floor wire harness; replace the floor wire harness. ■

DTC Troubleshooting (cont'd)

DTC 27-1x ("x" can be 0 thru 9 or A thru F): Open or Increased Resistance in Driver's Seat Belt Buckle Tensioner

Special Tools Required
- SRS inflator simulator 07SAZ-TB4011A
- SRS simulator lead K 070AZ-SNAA200

NOTE: Before doing this troubleshooting procedure, review SRS Precautions and Procedures (see page 24-15).

1. Erase the DTC memory (see page 24-26).
2. Turn the ignition switch ON (II), and check that the SRS indicator comes on for about 6 seconds and then goes off.

   Does the SRS indicator stay on, and is DTC 27-1x indicated?

   YES—Go to step 3.

   NO—Intermittent failure, the system is OK at this time. Go to Troubleshooting Intermittent Failures (see page 24-27). If another DTC is indicated, go to the DTC Troubleshooting Index.
3. Turn the ignition switch OFF. Disconnect the negative cable from the battery, and wait for 3 minutes.
4. Disconnect the floor wire harness 4P connector (A) from the driver's seat belt buckle tensioner connector (B).

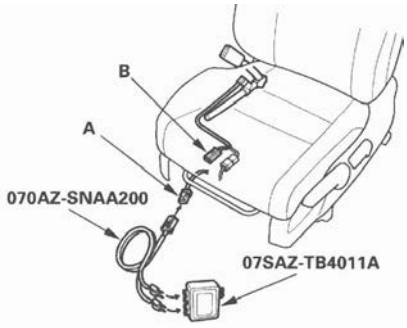

5. Connect the SRS inflator simulator (2 Ω connectors) and simulator lead K to the floor wire harness connector.
6. Reconnect the negative cable to the battery.
7. Erase the DTC memory.
8. Read the DTC (see page 24-25).

   Is DTC 27-1x indicated?

   YES—Go to step 9.

   NO—Open or increased resistance in the driver's seat belt buckle tensioner; replace the driver's seat belt buckle (see page 24-6). ■
9. Turn the ignition switch OFF. Disconnect the negative cable from the battery, and wait for 3 minutes.
10. Disconnect both seat belt tensioner 4P connectors (see step 7 on page 24-24) and the front passenger's seat belt buckle tensioner 4P connector (see step 8 on page 24-24).
11. Disconnect SRS unit connector B (28P) from the SRS unit (see step 9 on page 24-24).
12. Check resistance between the No. 7 and No. 8 terminals of SRS unit connector B (28P). There should be 2.0—3.0 Ω.

SRS UNIT CONNECTOR B (28P)

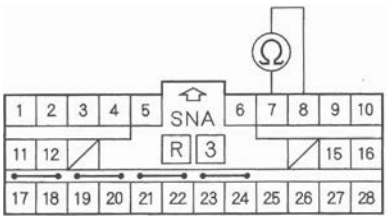

Wire side of female terminals

Is the resistance as specified?

YES—Faulty SRS unit or poor connection at SRS unit connector B (28P) and the SRS unit. Check the connection; if the connection is OK, replace the SRS unit (see page 24-176). ■

NO—Open or increased resistance in the floor wire harness; replace the floor wire harness. ■

DTC 27-3x ("x" can be 0 thru 9 or A thru F): Short to Another Wire or Decreased Resistance in Driver's Seat Belt Buckle Tensioner

Special Tools Required
- SRS inflator simulator 07SAZ-TB4011A
- SRS simulator lead K 070AZ-SNAA200

NOTE: Before doing this troubleshooting procedure, review SRS Precautions and Procedures (see page 24-15).

1. Erase the DTC memory (see page 24-26).
2. Turn the ignition switch ON (II), and check that the SRS indicator comes on for about 6 seconds and then goes off.

   Does the SRS indicator stay on, and is DTC 27-3x indicated?

   YES—Go to step 3.
   NO—Intermittent failure, the system is OK at this time. Go to Troubleshooting Intermittent Failures (see page 24-27). If another DTC is indicated, go to the DTC Troubleshooting Index.
3. Turn the ignition switch OFF. Disconnect the negative cable from the battery, and wait for 3 minutes.
4. Disconnect the floor wire harness 4P connector (A) from the driver's seat belt buckle tensioner connector (B).

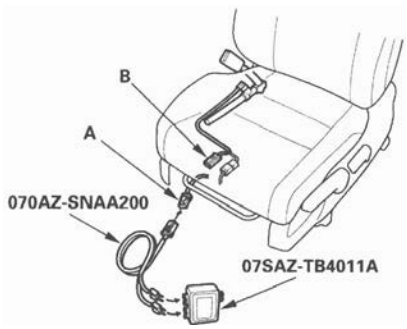

5. Connect the SRS inflator simulator (2 Ω connectors) and simulator lead K to the floor wire harness connector.
6. Reconnect the negative cable to the battery.
7. Erase the DTC memory.
8. Read the DTC (see page 24-25).

   Is DTC 27-3x indicated?

   YES—Go to step 9.

   NO—Short in the driver's seat belt buckle tensioner; replace the driver's seat belt buckle (see page 24-6). ■
9. Turn the ignition switch OFF. Disconnect the negative cable from the battery, and wait for 3 minutes.
10. Disconnect both seat belt tensioner 4P connectors (see step 7 on page 24-24) and the front passenger's seat belt buckle tensioner 4P connector (see step 8 on page 24-24).
11. Disconnect SRS unit connector B (28P) from the SRS unit (see step 9 on page 24-24).
12. Disconnect the simulator lead from the floor wire harness.
13. Check resistance between the No. 7 and No. 8 terminals of SRS unit connector B (28P). There should be an open circuit (ohmmeter reads OL) or at least 1 MΩ.

SRS UNIT CONNECTOR B (28P)

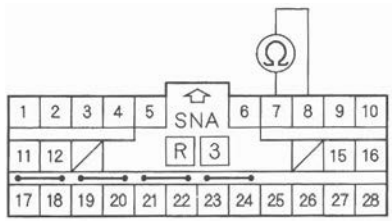

Wire side of female terminals

Is the resistance as specified?

YES—Faulty SRS unit or poor connection at SRS unit connector B (28P) and the SRS unit. Check the connection; if the connection is OK, replace the SRS unit (see page 24-176). ■

NO—Short in the floor wire harness; replace the floor wire harness. ■

DTC Troubleshooting (cont'd)

DTC 27-8x ("x" can be 0 thru 9 or A thru F): Short to Power in Driver's Seat Belt Buckle Tensioner

Special Tools Required
- SRS inflator simulator 07SAZ-TB4011A
- SRS simulator lead K 070AZ-SNAA200

NOTE: Before doing this troubleshooting procedure, review SRS Precautions and Procedures (see page 24-15).

1. Erase the DTC memory (see page 24-26).
2. Turn the ignition switch ON (II), and check that the SRS indicator comes on for about 6 seconds and then goes off.

   Does the SRS indicator stay on, and is DTC 27-8x indicated?

   YES—Go to step 3.
   NO—Intermittent failure, the system is OK at this time. Go to Troubleshooting Intermittent Failures (see page 24-27). If another DTC is indicated, go to the DTC Troubleshooting Index.
3. Turn the ignition switch OFF. Disconnect the negative cable from the battery, and wait for 3 minutes.
4. Disconnect the floor wire harness 4P connector (A) from the driver's seat belt buckle tensioner connector (B).

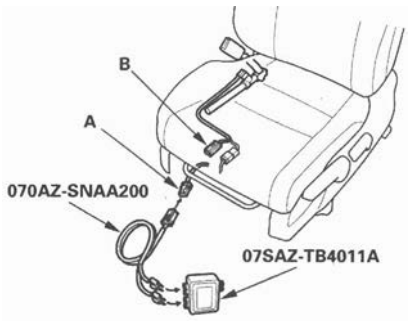

5. Connect the SRS inflator simulator (2 Ω connectors) and simulator lead K to the floor wire harness connector.
6. Reconnect the negative cable to the battery.
7. Erase the DTC memory.
8. Read the DTC (see page 24-25).

   Is DTC 27-8x indicated?

   YES—Go to step 9.

   NO—Short to power in the driver's seat belt buckle tensioner; replace the driver's seat belt buckle (see page 24-6).■
9. Turn the ignition switch OFF. Disconnect the negative cable from the battery, and wait for 3 minutes.
10. Disconnect both seat belt tensioner 4P connectors (see step 7 on page 24-24) and the front passenger's seat belt buckle tensioner 4P connector (see step 8 on page 24-24).
11. Disconnect SRS unit connector B (28P) from the SRS unit (see step 9 on page 24-24).
12. Disconnect the simulator lead from the floor wire harness.
13. Reconnect the negative cable to the battery.
14. Turn the ignition switch ON (II).
15. Check for voltage between the No. 7 terminal of SRS unit connector B (28P) and body ground, and the No. 8 terminal and body ground. There should be 0.5 V or less.

SRS UNIT CONNECTOR B (28P)

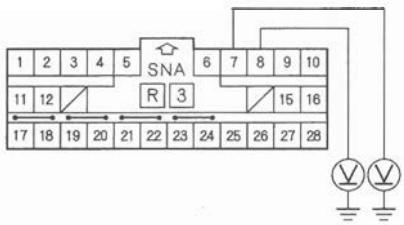

Wire side of female terminals

Is the voltage as specified?

YES—Faulty SRS unit or poor connection at SRS unit connector B (28P) and the SRS unit. Check the connection; if the connection is OK, replace the SRS unit (see page 24-176).■

NO—Short to power in the floor wire harness; replace the floor wire harness.■

DTC 27-9x ("x" can be 0 thru 9 or A thru F): Short to Ground in Driver's Seat Belt Buckle Tensioner

Special Tools Required
- SRS inflator simulator 07SAZ-TB4011A
- SRS simulator lead K 070AZ-SNAA200

NOTE: Before doing this troubleshooting procedure, review SRS Precautions and Procedures (see page 24-15).

1. Erase the DTC memory (see page 24-26).
2. Turn the ignition switch ON (II), and check that the SRS indicator comes on for about 6 seconds and then goes off.

   Does the SRS indicator stay on, and is DTC 27-9x indicated?

   YES—Go to step 3.

   NO—Intermittent failure, the system is OK at this time. Go to Troubleshooting Intermittent Failures (see page 24-27). If another DTC is indicated, go to the DTC Troubleshooting Index.
3. Turn the ignition switch OFF. Disconnect the negative cable from the battery, and wait for 3 minutes.
4. Disconnect the floor wire harness 4P connector (A) from the driver's seat belt buckle tensioner connector (B).

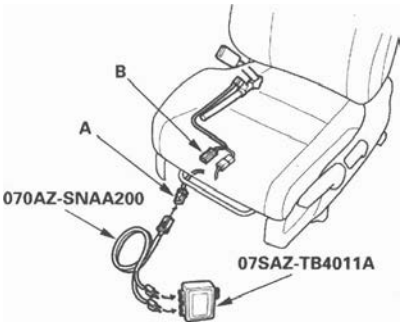

5. Connect the SRS inflator simulator (2 Ω connectors) and simulator lead K to the floor wire harness connector.
6. Reconnect the negative cable to the battery.
7. Erase the DTC memory.
8. Read the DTC (see page 24-25).

   Is DTC 27-9x indicated?

   YES—Go to step 9.

   NO—Short to ground in the driver's seat belt buckle tensioner; replace the driver's seat belt buckle (see page 24-6). ■
9. Turn the ignition switch OFF. Disconnect the negative cable from the battery, and wait for 3 minutes.
10. Disconnect both seat belt tensioner 4P connectors (see step 7 on page 24-24) and the front passenger's seat belt buckle tensioner 4P connector (see step 8 on page 24-24).
11. Disconnect SRS unit connector B (28P) from the SRS unit (see step 9 on page 24-24).
12. Disconnect the simulator lead from the floor wire harness.
13. Check resistance between the No. 7 terminal of SRS unit connector B (28P) and body ground, and the No. 8 terminal and body ground. There should be an open circuit (ohmmeter reads OL) or at least 1 MΩ.

SRS UNIT CONNECTOR B (28P)

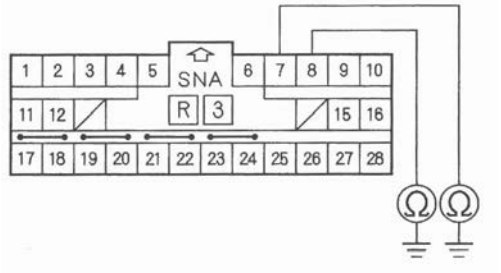

Wire side of female terminals

Is the resistance as specified?

YES—Faulty SRS unit or poor connection at SRS unit connector B (28P) and the SRS unit. Check the connection; if the connection is OK, replace the SRS unit (see page 24-176). ■

NO—Short to ground in the floor wire harness; replace the floor wire harness. ■

DTC Troubleshooting (cont'd)

DTC 28-1x ("x" can be 0 thru 9 or A thru F): Open or Increased Resistance in Front Passenger's Seat Belt Buckle Tensioner

Special Tools Required
- SRS inflator simulator 07SAZ-TB4011A
- SRS simulator lead K 070AZ-SNAA200

NOTE: Before doing this troubleshooting procedure, review SRS Precautions and Procedures (see page 24-15).

1. Erase the DTC memory (see page 24-26).
2. Turn the ignition switch ON (II), and check that the SRS indicator comes on for about 6 seconds and then goes off.

   Does the SRS indicator stay on, and is DTC 28-1x indicated?

   YES—Go to step 3.

   NO—Intermittent failure, the system is OK at this time. Go to Troubleshooting Intermittent Failures (see page 24-27). If another DTC is indicated, go to the DTC Troubleshooting Index.
3. Turn the ignition switch OFF. Disconnect the negative cable from the battery, and wait for 3 minutes.
4. Disconnect the front passenger's seat subharness 4P connector (A) from the front passenger's seat belt buckle tensioner connector (B).

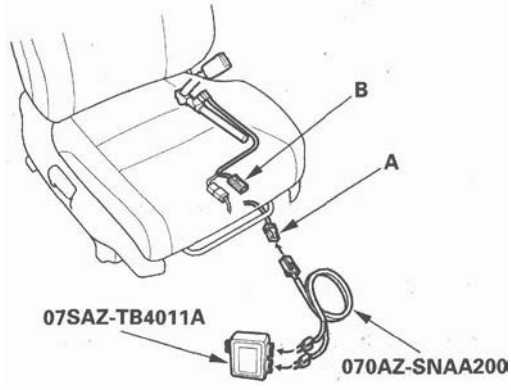

5. Connect the SRS inflator simulator (2 Ω connectors) and simulator lead K to the front passenger's seat subharness connector.
6. Reconnect the negative cable to the battery.
7. Erase the DTC memory.
8. Read the DTC (see page 24-25).

   Is DTC 28-1x indicated?

   YES—Go to step 9.

   NO—Open or increased resistance in the front passenger's seat belt buckle tensioner; replace the front passenger's seat belt buckle (see page 24-6). ■
9. Turn the ignition switch OFF. Disconnect the negative cable from the battery, and wait for 3 minutes.
10. Disconnect both seat belt tensioner 4P connectors (see step 7 on page 24-24) and the driver's seat belt buckle tensioner 4P connector (see step 8 on page 24-24).
11. Disconnect SRS unit connector B (28P) from the SRS unit (see step 9 on page 24-24).
12. Check resistance between the No. 9 and No. 10 terminals of SRS unit connector B (28P). There should be 2.0—3.0 Ω.

SRS UNIT CONNECTOR B (28P)

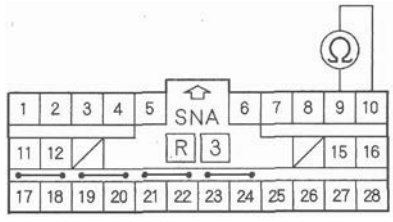

Wire side of female terminals

Is the resistance as specified?

YES—Faulty SRS unit or poor connection at SRS unit connector B (28P) and the SRS unit. Check the connection; if the connection is OK, replace the SRS unit (see page 24-176). ■

NO—Go to step 13.

13. Disconnect floor wire harness 4P connector C554 (A) from front passenger's seat subharness 4P connector C554 (B).

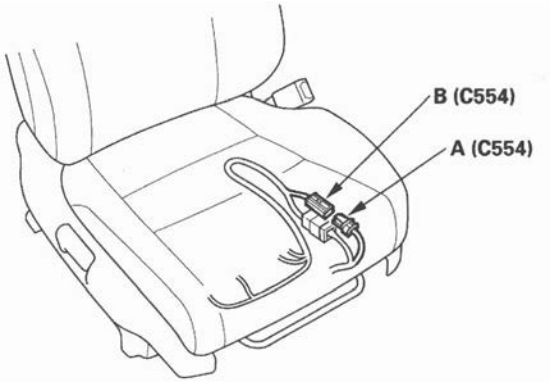

14. Check resistance between the No. 1 and No. 2 terminal of floor wire harness 4P connector C554. There should be less than 1.0 Ω.

FLOOR WIRE HARNESS 4P CONNECTOR C554

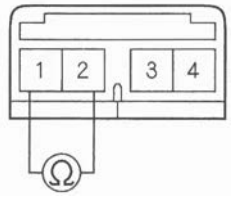

Wire side of female terminals

Is the resistance as specified?

YES—Open or increased resistance in front passenger's seat subharness; replace the front passenger's seat subharness. ■

NO—Open or increased resistance in floor wire harness; replace the floor wire harness. ■

DTC 28-3x ("x" can be 0 thru 9 or A thru F): Short to Another Wire or Decreased Resistance in Front Passenger's Seat Belt Buckle Tensioner

Special Tools Required
- SRS inflator simulator 07SAZ-TB4011A
- SRS simulator lead K 070AZ-SNAA200

NOTE: Before doing this troubleshooting procedure, review SRS Precautions and Procedures (see page 24-15).

1. Erase the DTC memory (see page 24-26).

2. Turn the ignition switch ON (II), and check that the SRS indicator comes on for about 6 seconds and then goes off.

   Does the SRS indicator stay on, and is DTC 28-3x indicated?
   YES—Go to step 3.
   NO—Intermittent failure, the system is OK at this time. Go to Troubleshooting Intermittent Failures (see page 24-27). If another DTC is indicated, go to the DTC Troubleshooting Index.

3. Turn the ignition switch OFF. Disconnect the negative cable from the battery, and wait for 3 minutes.

4. Disconnect the front passenger's seat subharness 4P connector (A) from the front passenger's seat belt buckle tensioner connector (B).

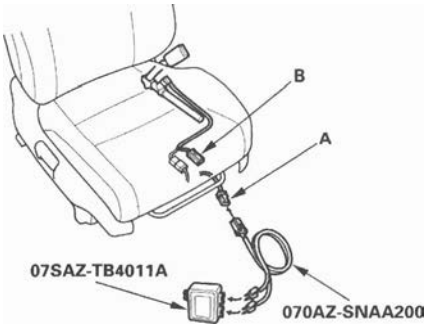

5. Connect the SRS inflator simulator (2 Ω connectors) and simulator lead K to front passenger's seat subharness connector.

6. Reconnect the negative cable to the battery.

7. Erase the DTC memory.

(cont'd)

DTC Troubleshooting (cont'd)

8. Read the DTC (see page 24-25).

   Is DTC 28-3x indicated?

   YES—Go to step 9.

   NO—Short in the front passenger's seat belt buckle tensioner; replace the front passenger's seat belt buckle (see page 24-6).■

9. Turn the ignition switch OFF. Disconnect the negative cable from the battery, and wait for 3 minutes.

10. Disconnect both seat belt tensioner 4P connectors (see step 7 on page 24-24) and the driver's seat belt buckle tensioner 4P connector (see step 8 on page 24-24).

11. Disconnect SRS unit connector B (28P) from the SRS unit (see step 9 on page 24-24).

12. Disconnect the simulator lead from the front passenger's seat subharness.

13. Check resistance between the No. 9 and No. 10 terminals of SRS unit connector B (28P). There should be an open circuit (ohmmeter reads OL) or at least 1 MΩ.

SRS UNIT CONNECTOR B (28P)

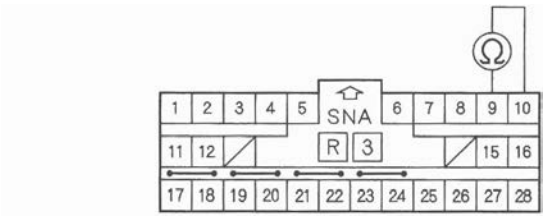

Wire side of female terminals

Is the resistance as specified?

YES—Faulty SRS unit or poor connection at SRS unit connector B (28P) and the SRS unit. Check the connection; if the connection is OK, replace the SRS unit (see page 24-176).■

NO—Go to step 14.■

14. Disconnect floor wire harness 4P connector C554 (A) from front passenger's seat subharness 4P connector C554 (B).

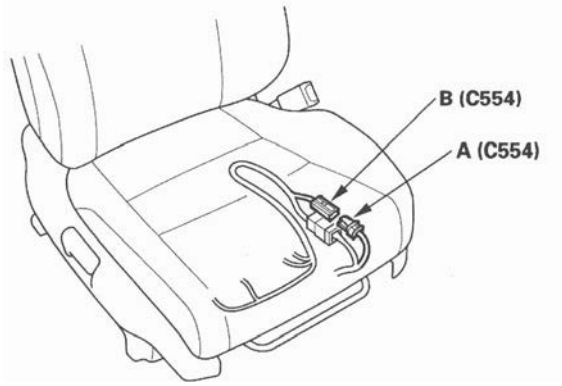

15. Check resistance between the No. 1 and No. 2 terminal of floor wire harness 4P connector C554. There should be an open circuit (ohmmeter reads OL) or at least 1 MΩ.

FLOOR WIRE HARNESS 4P CONNECTOR C554

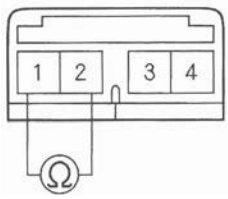

Wire side of female terminals

Is the resistance as specified?

YES—Short to another wire in front passenger's seat subharness; replace the front passenger's seat subharness.■

NO—Short to another wire in floor wire harness; replace the floor wire harness.■

DTC 28-8x ("x" can be 0 thru 9 or A thru F): Short to Power in Front Passenger's Seat Belt Buckle Tensioner

Special Tools Required
- SRS inflator simulator 07SAZ-TB4011A
- SRS simulator lead K 070AZ-SNAA200

NOTE: Before doing this troubleshooting procedure, review SRS Precautions and Procedures (see page 24-15).

1. Erase the DTC memory (see page 24-26).
2. Turn the ignition switch ON (II), and check that the SRS indicator comes on for about 6 seconds and then goes off.

   Does the SRS indicator stay on, and is DTC 28-8x indicated?

   YES—Go to step 3.

   NO—Intermittent failure, the system is OK at this time. Go to Troubleshooting Intermittent Failures (see page 24-27). If another DTC is indicated, go to the DTC Troubleshooting Index.
3. Turn the ignition switch OFF. Disconnect the negative cable from the battery, and wait for 3 minutes.
4. Disconnect the front passenger's seat subharness 4P connector (A) from the front passenger's seat belt buckle tensioner connector (B).

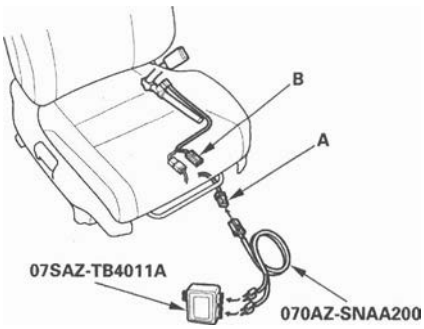

5. Connect the SRS inflator simulator (2 Ω connectors) and simulator lead K to front passenger's seat subharness connector.
6. Reconnect the negative cable to the battery.
7. Erase the DTC memory.
8. Read the DTC (see page 24-25).

   Is DTC 28-8x indicated?

   YES—Go to step 9.

   NO—Short to power in the front passenger's seat belt buckle tensioner; replace the front passenger's seat belt buckle (see page 24-6). ■
9. Turn the ignition switch OFF. Disconnect the negative cable from the battery, and wait for 3 minutes.
10. Disconnect both seat belt tensioner 4P connectors (see step 7 on page 24-24) and the driver's seat belt buckle tensioner 4P connector (see step 8 on page 24-24).
11. Disconnect SRS unit connector B (28P) from the SRS unit (see step 9 on page 24-24).
12. Disconnect the simulator lead from the front passenger's seat subharness.
13. Reconnect the negative cable to the battery.
14. Turn the ignition switch ON (II).
15. Check for voltage between the No. 9 terminal of SRS unit connector B (28P) and body ground, and the No. 10 terminal and body ground. There should be 0.5 V or less.

SRS UNIT CONNECTOR B (28P)

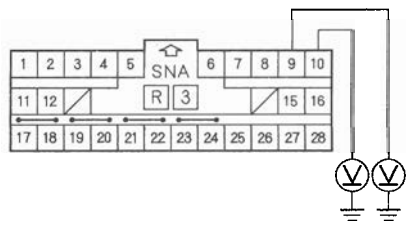

Wire side of female terminals

Is the voltage as specified?

YES—Faulty SRS unit or poor connection at SRS unit connector B (28P) and the SRS unit. Check the connection; if the connection is OK, replace the SRS unit (see page 24-176). ■

NO—Go to step 16.

(cont'd)

DTC Troubleshooting (cont'd)

16. Turn the ignition switch OFF.

17. Disconnect floor wire harness 4P connector C554 (A) from front passenger's seat subharness 4P connector C554 (B).

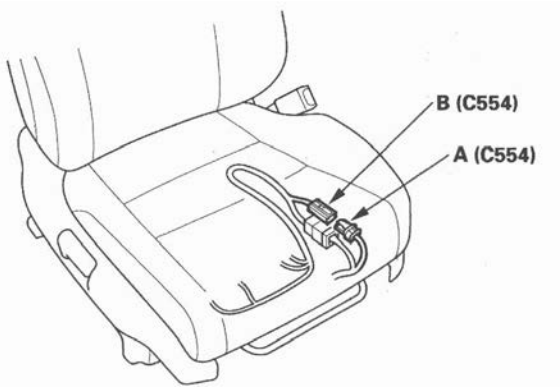

18. Check for voltage between the No. 1 terminal of floor wire harness 4P connector C554 and body ground, and between the No. 2 terminal and body ground. There should be less than 0.5 V.

FLOOR WIRE HARNESS 4P CONNECTOR C554

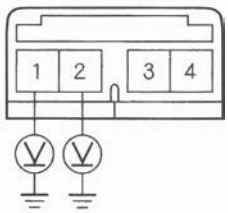

Wire side of female terminals

Is the voltage as specified?

YES—Short to power in front passenger's seat subharness; replace the front passenger's seat subharness. ■

NO—Short to power in floor wire harness; replace the floor wire harness. ■

DTC 28-9x ("x" can be 0 thru 9 or A thru F): Short to Ground in Front Passenger's Seat Belt Buckle Tensioner

Special Tools Required
- SRS inflator simulator 07SAZ-TB4011A
- SRS simulator lead K 070AZ-SNAA200

NOTE: Before doing this troubleshooting procedure, review SRS Precautions and Procedures (see page 24-15).

1. Erase the DTC memory (see page 24-26).

2. Turn the ignition switch ON (II), and check that the SRS indicator comes on for about 6 seconds and then goes off.

   Does the SRS indicator stay on, and is DTC 28-9x indicated?

   YES—Go to step 3.
   NO—Intermittent failure, the system is OK at this time. Go to Troubleshooting Intermittent Failures (see page 24-27). If another DTC is indicated, go to the DTC Troubleshooting Index.

3. Turn the ignition switch OFF. Disconnect the negative cable from the battery, and wait for 3 minutes.

4. Disconnect the front passenger's seat subharness 4P connector (A) from the front passenger's seat belt buckle tensioner connector (B).

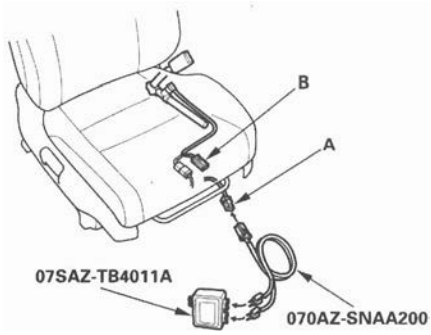

5. Connect the SRS inflator simulator (2 Ω connectors) and simulator lead K to the front passenger's seat subharness connector.

6. Reconnect the negative cable to the battery.

7. Erase the DTC memory.

8. Read the DTC (see page 24-25).

   Is DTC 28-9x indicated?

   YES—Go to step 9.

   NO—Short to ground in the front passenger's seat belt buckle tensioner; replace the front passenger's seat belt buckle (see page 24-6). ■

9. Turn the ignition switch OFF. Disconnect the negative cable from the battery, and wait for 3 minutes.

10. Disconnect both seat belt tensioner 4P connectors (see step 7 on page 24-24) and the driver's seat belt buckle tensioner 4P connector (see step 8 on page 24-24).

11. Disconnect SRS unit connector B (28P) from the SRS unit (see step 9 on page 24-24).

12. Disconnect the simulator lead from the front passenger's seat subharness.

13. Check resistance between the No. 9 terminal of SRS unit connector B (28P) and body ground, and the No. 10 terminal and body ground. There should be an open circuit (ohmmeter reads OL) or at least 1 MΩ.

SRS UNIT CONNECTOR B (28P)

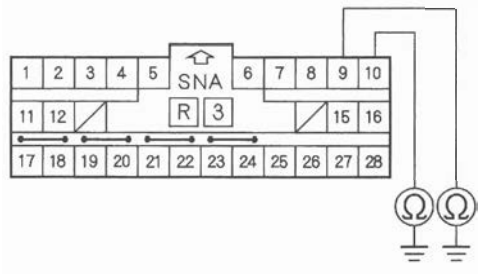

Wire side of female terminals

Is the resistance as specified?

YES—Faulty SRS unit or poor connection at SRS unit connector B (28P) and the SRS unit. Check the connection; if the connection is OK, replace the SRS unit (see page 24-176). ■

NO—Go to step 14.

14. Disconnect center floor wire harness 4P connector C554 (A) from front passenger's seat subharness 4P connector C554 (B).

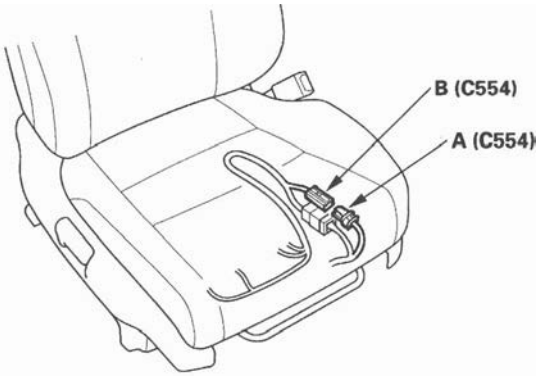

15. Check resistance between the No. 1 terminal of floor wire harness 4P connector C554 and body ground, and between the No. 2 terminal and body ground. There should be an open circuit (ohmmeter reads OL) or at least 1 MΩ.

FLOOR WIRE HARNESS 4P CONNECTOR C554

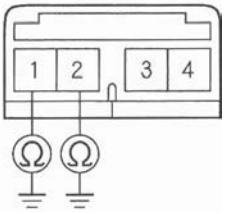

Wire side of female terminals

Is the resistance as specified?

YES—Short to ground in front passenger's seat subharness; replace the front passenger's seat subharness. ■

NO—Short to ground in floor wire harness; replace the floor wire harness. ■

DTC Troubleshooting (cont'd)

DTC 31-1x ("x" can be 0 thru 9 or A thru F): Open or Increased Resistance in Driver's Side Airbag Inflator

Special Tools Required
- SRS inflator simulator 07SAZ-TB4011A
- SRS simulator lead L 070AZ-SNAA300

NOTE: Before doing this troubleshooting procedure, review SRS Precautions and Procedures (see page 24-15).

1. Erase the DTC memory (see page 24-26).
2. Turn the ignition switch ON (II), and check that the SRS indicator comes on for about 6 seconds and then goes off.

   Does the SRS indicator stay on, and is DTC 31-1x indicated?

   YES—Go to step 3.

   NO—Intermittent failure, the system is OK at this time. Go to Troubleshooting Intermittent Failures (see page 24-27). If another DTC is indicated, go to the DTC Troubleshooting Index.
3. Turn the ignition switch OFF. Disconnect the negative cable from the battery, and wait for 3 minutes.
4. Disconnect the floor wire harness 2P connector (A) from the driver's side airbag (B).

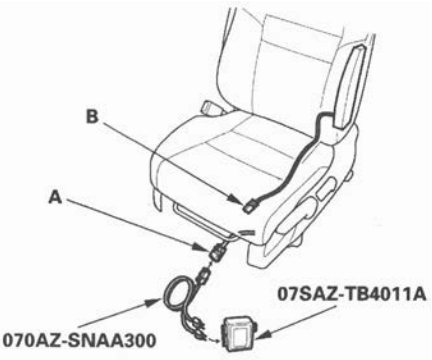

5. Connect the SRS inflator simulator (2 Ω connectors) and simulator lead L to the floor wire harness.
6. Reconnect the negative cable to the battery.
7. Erase the DTC memory.
8. Read the DTC (see page 24-25).

   Is DTC 31-1x indicated?

   YES—Go to step 9.

   NO—Open or increased resistance in the driver's side airbag inflator; replace the driver's side airbag (see page 24-164). ■
9. Turn the ignition switch OFF. Disconnect the negative cable from the battery, and wait for 3 minutes.
10. Disconnect both seat belt tensioner 4P connectors (see step 7 on page 24-24) and both seat belt buckle tensioner 4P connectors (see step 8 on page 24-24).
11. Disconnect SRS unit connector B (28P) from the SRS unit (see step 9 on page 24-24).
12. Disconnect the SRS inflator simulator from SRS simulator lead. Do not disconnect the simulator lead from the floor wire harness 2P connector.
13. Check resistance between the terminals of the black SRS simulator lead (A). There should be 1.0 Ω or less.

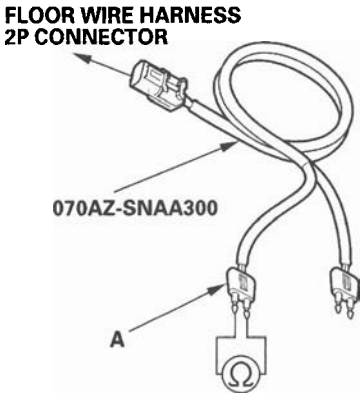

Is the resistance as specified?

YES—Faulty SRS unit or poor connection at SRS unit connector B (28P) and the SRS unit. Check the connection; if the connection is OK, replace the SRS unit (see page 24-176). ■

NO—Open or increased resistance in the floor wire harness; replace the floor wire harness. ■

DTC 31-3x ("x" can be 0 thru 9 or A thru F): Short to Another Wire or Decreased Resistance in Driver's Side Airbag Inflator

Special Tools Required
- SRS inflator simulator 07SAZ-TB4011A
- SRS simulator lead L 070AZ-SNAA300
- SRS short canceller 070AZ-SAA0100

NOTE: Before doing this troubleshooting procedure, review SRS Precautions and Procedures (see page 24-15).

1. Erase the DTC memory (see page 24-26).
2. Turn the ignition switch ON (II), and check that the SRS indicator comes on for about 6 seconds and then goes off.

   Does the SRS indicator stay on, and is DTC 31-3x indicated?

   YES—Go to step 3.

   NO—Intermittent failure, the system is OK at this time. Go to Troubleshooting Intermittent Failures (see page 24-27). If another DTC is indicated, go to the DTC Troubleshooting Index.
3. Turn the ignition switch OFF. Disconnect the negative cable from the battery, and wait for 3 minutes.
4. Disconnect the floor wire harness 2P connector (A) from the driver's side airbag (B).

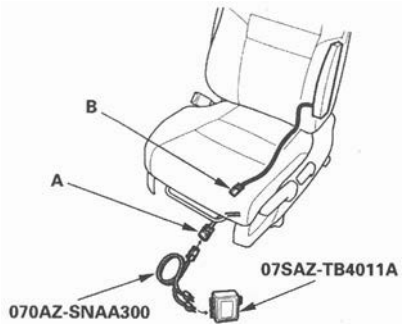

5. Connect the SRS inflator simulator (2 Ω connectors) and simulator lead L to the floor wire harness.
6. Reconnect the negative cable to the battery.
7. Erase the DTC memory.
8. Read the DTC (see page 24-25).

   Is DTC 31-3x indicated?

   YES—Go to step 9.

   NO—Short to another wire in the driver's side airbag inflator; replace the driver's side airbag (see page 24-164). ■
9. Turn the ignition switch OFF. Disconnect the negative cable from the battery, and wait for 3 minutes.
10. Disconnect both seat belt tensioner 4P connectors (see step 7 on page 24-24) and both seat belt buckle tensioner 4P connectors (see step 8 on page 24-24).
11. Disconnect SRS unit connector B (28P) from the SRS unit (see step 9 on page 24-24).
12. Disconnect the SRS inflator simulator from the SRS simulator lead. Do not disconnect the simulator lead from the floor wire harness 2P connector.
13. Connect the SRS short canceller (070AZ-SAA0100) to the No. 17 and No. 18 terminals of SRS unit connector B (28P) (see page 24-20).
14. Check resistance between the terminals of the black SRS simulator lead (A). There should be an open circuit (ohmmeter reads OL) or at least 1 MΩ.

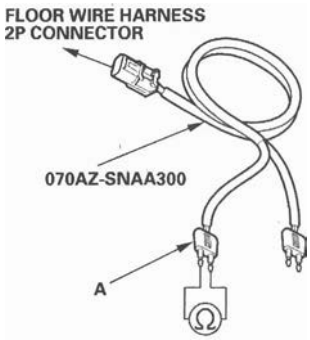

Is the resistance as specified?

YES—Faulty SRS unit or poor connection at SRS unit connector B (28P) and the SRS unit. Check the connection; if the connection is OK, replace the SRS unit (see page 24-176). ■

NO—Short in the floor wire harness; replace the floor wire harness. ■

DTC Troubleshooting (cont'd)

DTC 31-8x ("x" can be 0 thru 9 or A thru F): Short to Power in Driver's Side Airbag Inflator

Special Tools Required
- SRS inflator simulator 07SAZ-TB4011A
- SRS simulator lead L 070AZ-SNAA300

NOTE: Before doing this troubleshooting procedure, review SRS Precautions and Procedures (see page 24-15).

1. Erase the DTC memory (see page 24-26).
2. Turn the ignition switch ON (II), and check that the SRS indicator comes on for about 6 seconds and then goes off.

   Does the SRS indicator stay on, and is DTC 31-8x indicated?

   YES—Go to step 3.

   NO—Intermittent failure, the system is OK at this time. Go to Troubleshooting Intermittent Failures (see page 24-27). If another DTC is indicated, go to the DTC Troubleshooting Index.
3. Turn the ignition switch OFF. Disconnect the negative cable from the battery, and wait for 3 minutes.
4. Disconnect the floor wire harness 2P connector (A) from the driver's side airbag (B).

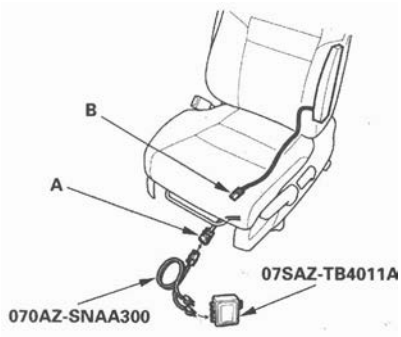

5. Connect the SRS inflator simulator (2 Ω connectors) and simulator lead L to the floor wire harness.
6. Reconnect the negative cable to the battery.
7. Erase the DTC memory.
8. Read the DTC (see page 24-25).

   Is DTC 31-8x indicated?

   YES—Go to step 9.

   NO—Short to power in the driver's side airbag inflator; replace the driver's side airbag (see page 24-164).■
9. Turn the ignition switch OFF. Disconnect the negative cable from the battery, and wait for 3 minutes.
10. Disconnect both seat belt tensioner 4P connectors (see step 7 on page 24-24) and both seat belt buckle tensioner 4P connectors (see step 8 on page 24-24).
11. Disconnect SRS unit connector B (28P) from the SRS unit (see step 9 on page 24-24).
12. Disconnect the SRS inflator simulator from the SRS simulator lead. Do not disconnect the simulator lead from the floor wire harness 2P connector.
13. Reconnect the negative cable to the battery.
14. Turn the ignition switch ON (II).
15. Check for voltage between each terminal of the black SRS simulator lead (A) and body ground. There should be 0.5 V or less.

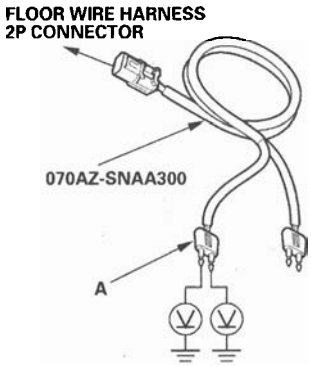

Is the voltage as specified?

YES—Faulty SRS unit or poor connection at SRS unit connector B (28P) and the SRS unit. Check the connection; if the connection is OK, replace the SRS unit (see page 24-176).■

NO—Short to power in the floor wire harness; replace the floor wire harness.■

DTC 31-9x ("x" can be 0 thru 9 or A thru F): Short to Ground in Driver's Side Airbag Inflator

Special Tools Required
- SRS inflator simulator 07SAZ-TB4011A
- SRS simulator lead L 070AZ-SNAA300

NOTE: Before doing this troubleshooting procedure, review SRS Precautions and Procedures (see page 24-15).

1. Erase the DTC memory (see page 24-26).
2. Turn the ignition switch ON (II), and check that the SRS indicator comes on for about 6 seconds and then goes off.

   Does the SRS indicator stay on, and is DTC 31-9x indicated?

   YES—Go to step 3.

   NO—Intermittent failure, the system is OK at this time. Go to Troubleshooting Intermittent Failures (see page 24-27). If another DTC is indicated, go to the DTC Troubleshooting Index.
3. Turn the ignition switch OFF. Disconnect the negative cable from the battery, and wait for 3 minutes.
4. Disconnect the floor wire harness 2P connector (A) from the driver's side airbag (B).

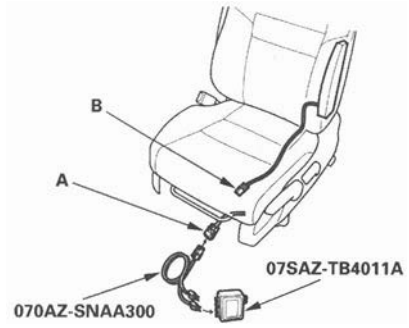

5. Connect the SRS inflator simulator (2 Ω connectors) and simulator lead L to the floor wire harness.
6. Reconnect the negative cable to the battery.
7. Erase the DTC memory.
8. Read the DTC (see page 24-25).

   Is DTC 31-9x indicated?

   YES—Go to step 9.

   NO—Short to ground in the driver's side airbag inflator; replace the driver's side airbag (see page 24-164).■
9. Turn the ignition switch OFF. Disconnect the negative cable from the battery, and wait for 3 minutes.
10. Disconnect both seat belt tensioner 4P connectors (see step 7 on page 24-24) and both seat belt buckle tensioner 4P connectors (see step 8 on page 24-24).
11. Disconnect SRS unit connector B (28P) from the SRS unit (see step 9 on page 24-24).
12. Disconnect the SRS inflator simulator from the SRS simulator lead. Do not disconnect the simulator lead from the floor wire harness 2P connector.
13. Check resistance between each terminal of the black SRS simulator lead (A) and body ground. There should be an open circuit (ohmmeter reads OL) or at least 1 MΩ.

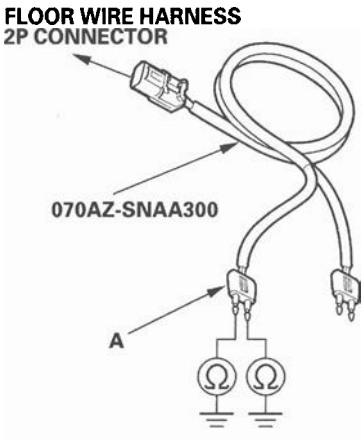

Is the resistance as specified?

YES—Faulty SRS unit or poor connection at SRS unit connector B (28P) and the SRS unit. Check the connection; if the connection is OK, replace the SRS unit (see page 24-176).■

NO—Short to ground in the floor wire harness; replace the floor wire harness.■

DTC Troubleshooting (cont'd)

DTC 32-1x ("x" can be 0 thru 9 or A thru F): Open or Increased Resistance in Front Passenger's Side Airbag Inflator

Special Tools Required
- SRS inflator simulator 07SAZ-TB4011A
- SRS simulator lead L 070AZ-SNAA300

NOTE: Before doing this troubleshooting procedure, review SRS Precautions and Procedures (see page 24-15).

1. Erase the DTC memory (see page 24-26).
2. Turn the ignition switch ON (II), and check that the SRS indicator comes on for about 6 seconds and then goes off.

   Does the SRS indicator stay on, and is DTC 32-1x indicated?

   YES—Go to step 3.

   NO—Intermittent failure, the system is OK at this time. Go to Troubleshooting Intermittent Failures (see page 24-27). If another DTC is indicated, go to the DTC Troubleshooting Index.
3. Turn the ignition switch OFF. Disconnect the negative cable from the battery, and wait for 3 minutes.
4. Disconnect the front passenger's seat subharness 2P connector (A) from the front passenger's side airbag (B).

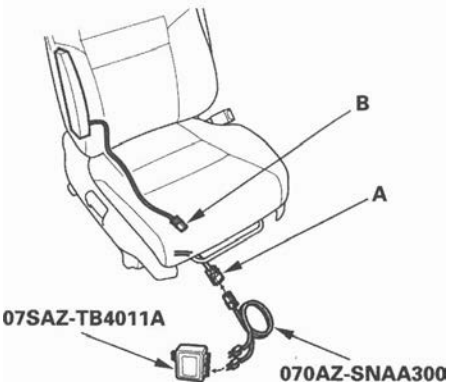

5. Connect the SRS inflator simulator (2 Ω connectors) and simulator lead L to the front passenger's seat subharness.
6. Reconnect the negative cable to the battery.
7. Erase the DTC memory.
8. Read the DTC (see page 24-25).

   Is DTC 32-1x indicated?

   YES—Go to step 9.

   NO—Open or increased resistance in the front passenger's side airbag inflator; replace the front passenger's side airbag (see page 24-164). ■
9. Turn the ignition switch OFF. Disconnect the negative cable from the battery, and wait for 3 minutes.
10. Disconnect both seat belt tensioner 4P connectors (see step 7 on page 24-24) and both seat belt buckle tensioner 4P connectors (see step 8 on page 24-24).
11. Disconnect SRS unit connector B (28P) from the SRS unit (see step 9 on page 24-24).
12. Disconnect the SRS inflator simulator from the SRS simulator lead. Do not disconnect the simulator lead from the front passenger's seat subharness 2P connector.
13. Check resistance between the terminals of the black SRS simulator lead (A). There should be 1.0 Ω or less.

FRONT PASSENGER'S SEAT SUBHARNESS 2P CONNECTOR

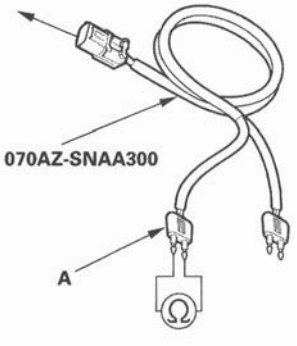

Is the resistance as specified?

YES—Faulty SRS unit or poor connection at SRS unit connector B (28P) and the SRS unit. Check the connection; if the connection is OK, replace the SRS unit (see page 24-176). ■

NO—Go to step 14.

14. Disconnect floor wire harness 4P connector C554 (A) from front passenger's seat subharness 4P connector C554 (B).

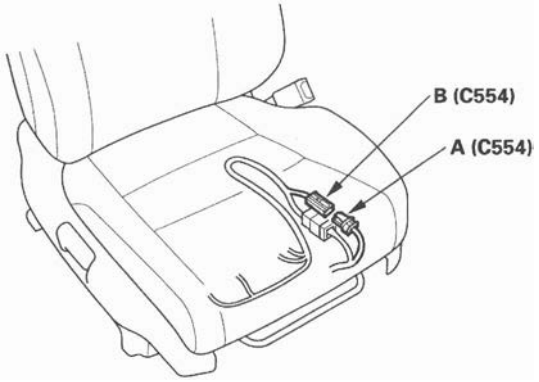

15. Check resistance between the No. 3 and No. 4 terminals of floor wire harness 4P connector C554. There should be less than 1.0 Ω.

FLOOR WIRE HARNESS 4P CONNECTOR C554

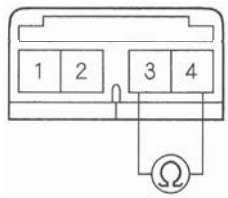

Wire side of female terminals

Is the resistance as specified?

YES—Open or increased resistance in front passenger's seat subharness; replace the front passenger's seat subharness. ■

NO—Open or increased resistance in floor wire harness; replace the floor wire harness. ■

DTC 32-3x ("x" can be 0 thru 9 or A thru F): Short to Another Wire or Decreased Resistance in Front Passenger's Side Airbag Inflator

Special Tools Required
- SRS inflator simulator 07SAZ-TB4011A
- SRS simulator lead L 070AZ-SNAA300
- SRS short canceller 070AZ-SAA0100

NOTE: Before doing this troubleshooting procedure, review SRS Precautions and Procedures (see page 24-15).

1. Erase the DTC memory (see page 24-26).

2. Turn the ignition switch ON (II), and check that the SRS indicator comes on for about 6 seconds and then goes off.

   Does the SRS indicator stay on, and is DTC 32-3x indicated?
   YES—Go to step 3.
   NO—Intermittent failure, the system is OK at this time. Go to Troubleshooting Intermittent Failures (see page 24-27). If another DTC is indicated, go to the DTC Troubleshooting Index.

3. Turn the ignition switch OFF. Disconnect the negative cable from the battery, and wait for 3 minutes.

4. Disconnect the front passenger's seat subharness 2P connector (A) from the front passenger's side airbag (B).



5. Connect the SRS inflator simulator (2 Ω connectors) and simulator lead L to the front passenger's seat subharness.

6. Reconnect the negative cable to the battery.

(cont'd)

DTC Troubleshooting (cont'd)

7. Erase the DTC memory.

8. Read the DTC (see page 24-25).

   Is DTC 32-3x indicated?

   YES—Go to step 9.
   NO—Short to another wire in the front passenger's side airbag inflator; replace the front passenger's side airbag (see page 24-164).■

9. Turn the ignition switch OFF. Disconnect the negative cable from the battery, and wait for 3 minutes.

10. Disconnect both seat belt tensioner 4P connectors (see step 7 on page 24-24) and both seat belt buckle tensioner 4P connectors (see step 8 on page 24-24).

11. Disconnect SRS unit connector B (28P) from the SRS unit (see step 9 on page 24-24).

12. Disconnect the SRS inflator simulator from the SRS simulator lead. Do not disconnect the simulator lead from the front passenger's seat subharness 2P connector.

13. Connect the SRS short canceller (070AZ-SAA0100) to the No. 19 and No. 20 terminals of SRS unit connector B (28P) (see page 24-20).

14. Check resistance between the terminals of the black SRS simulator lead (A). There should be an open circuit (ohmmeter reads OL) or at least 1 MΩ.

FRONT PASSENGER'S SEAT SUBHARNESS 2P CONNECTOR

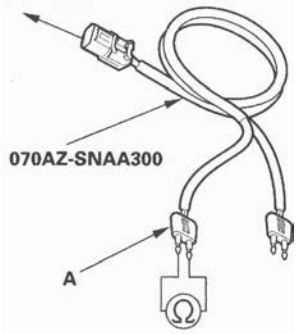

Is the resistance as specified?

YES—Faulty SRS unit or poor connection at SRS unit connector B (28P) and the SRS unit. Check the connection; if the connection is OK, replace the SRS unit (see page 24-176).■
NO—Go to step 15.

15. Disconnect floor wire harness 4P connector C554 (A) from front passenger's seat subharness 4P connector C554 (B).

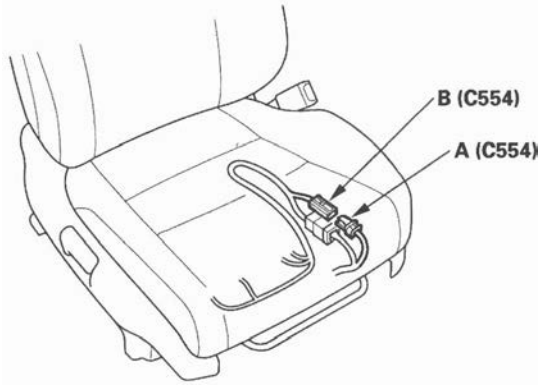

16. Check resistance between the No. 3 and No. 4 terminals of floor wire harness 4P connector C554. There should be an open circuit (ohmmeter reads OL) or at least 1 MΩ.

FLOOR WIRE HARNESS 4P CONNECTOR C554

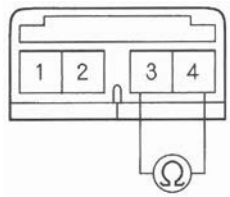

Wire side of female terminals

Is the resistance as specified?

YES—Short to another wire in front passenger's seat subharness; replace the front passenger's seat subharness.■

NO—Short to another wire in floor wire harness; replace the floor wire harness.■

DTC 32-8x ("x" can be 0 thru 9 or A thru F): Short to Power in Front Passenger's Side Airbag Inflator

Special Tools Required
- SRS inflator simulator 07SAZ-TB4011A
- SRS simulator lead L 070AZ-SNAA300

NOTE: Before doing this troubleshooting procedure, review SRS Precautions and Procedures (see page 24-15).

1. Erase the DTC memory (see page 24-26).
2. Turn the ignition switch ON (II), and check that the SRS indicator comes on for about 6 seconds and then goes off.

   Does the SRS indicator stay on, and is DTC 32-8x indicated?

   YES—Go to step 3.

   NO—Intermittent failure, the system is OK at this time. Go to Troubleshooting Intermittent Failures (see page 24-27). If another DTC is indicated, go to the DTC Troubleshooting Index.
3. Turn the ignition switch OFF. Disconnect the negative cable from the battery, and wait for 3 minutes.
4. Disconnect the front passenger's seat subharness 2P connector (A) from the front passenger's side airbag (B).

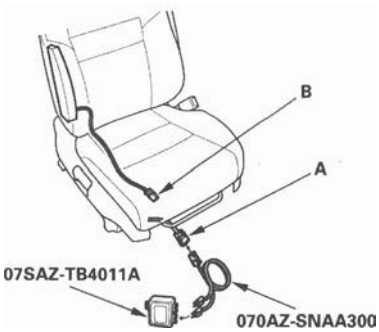

5. Connect the SRS inflator simulator (2 Ω connectors) and simulator lead L to the front passenger's seat subharness.
6. Reconnect the negative cable to the battery.
7. Erase the DTC memory.
8. Read the DTC (see page 24-25).

   Is DTC 32-8x indicated?

   YES—Go to step 9.
   NO—Short to power in the front passenger's side airbag inflator; replace the front passenger's side airbag (see page 24-164). ■
9. Turn the ignition switch OFF. Disconnect the negative cable from the battery, and wait for 3 minutes.
10. Disconnect both seat belt tensioner 4P connectors (see step 7 on page 24-24) and both seat belt buckle tensioner 4P connectors (see step 8 on page 24-24).
11. Disconnect SRS unit connector B (28P) from the SRS unit (see step 9 on page 24-24).
12. Disconnect the SRS inflator simulator from the SRS simulator lead. Do not disconnect the simulator lead from the front passenger's seat subharness 2P connector.
13. Reconnect the negative cable to the battery.
14. Turn the ignition switch ON (II).
15. Check for voltage between each terminal of the black SRS simulator lead (A) and body ground. There should be 0.5 V or less.

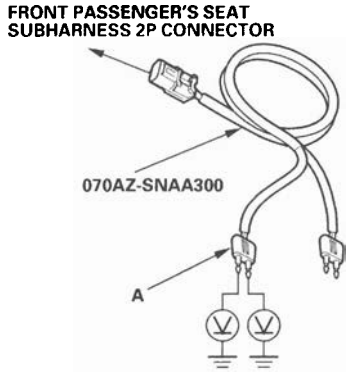

Is the voltage as specified?

YES—Faulty SRS unit or poor connection at SRS unit connector B (28P) and the SRS unit. Check the connection; if the connection is OK, replace the SRS unit (see page 24-176). ■
NO—Go to step 16.

(cont'd)

DTC Troubleshooting (cont'd)

16. Turn the ignition switch OFF.

17. Disconnect floor wire harness 4P connector C554 (A) from front passenger's seat subharness 4P connector C554 (B).

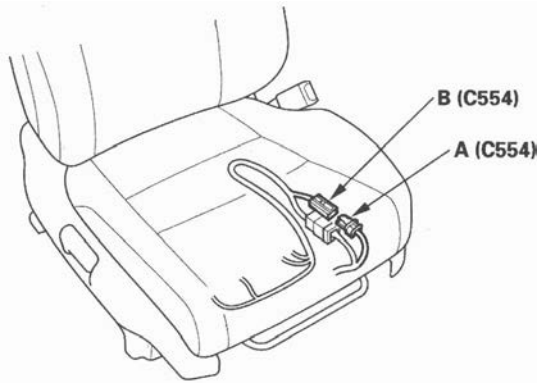

18. Check for voltage between the No. 3 terminal of floor wire harness 4P connector C554 and body ground, and between the No. 4 terminal and body ground. There should be less than 0.5 V.

FLOOR WIRE HARNESS 4P CONNECTOR C554

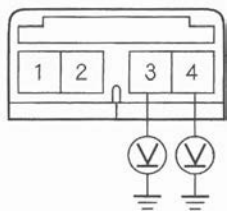

Wire side of female terminals

Is the resistance as specified?

YES—Short to power in front passenger's seat subharness; replace the front passenger's seat subharness.■

NO—Short to power in floor wire harness; replace the floor wire harness.■

DTC 32-9x ("x" can be 0 thru 9 or A thru F): Short to Ground in Front Passenger's Side Airbag Inflator

Special Tools Required
- SRS inflator simulator 07SAZ-TB4011A
- SRS simulator lead L 070AZ-SNAA300

NOTE: Before doing this troubleshooting procedure, review SRS Precautions and Procedures (see page 24-15).

1. Erase the DTC memory (see page 24-26).

2. Turn the ignition switch ON (II), and check that the SRS indicator comes on for about 6 seconds and then goes off.

   Does the SRS indicator stay on, and is DTC 32-9x indicated?

   YES—Go to step 3.
   NO—Intermittent failure, the system is OK at this time. Go to Troubleshooting Intermittent Failures (see page 24-27). If another DTC is indicated, go to the DTC Troubleshooting Index.

3. Turn the ignition switch OFF. Disconnect the negative cable from the battery, and wait for 3 minutes.

4. Disconnect the front passenger's seat subharness 2P connector (A) from the front passenger's side airbag (B).



5. Connect the SRS inflator simulator (2 Ω connectors) and simulator lead L to the front passenger's seat subharness.

6. Reconnect the negative cable to the battery.

7. Erase the DTC memory.

8. Read the DTC (see page 24-25).

   Is DTC 32-9x indicated?

   YES—Go to step 9.

   NO—Short to ground in the front passenger's side airbag inflator; replace the front passenger's side airbag (see page 24-164).■

9. Turn the ignition switch OFF. Disconnect the negative cable from the battery, and wait for 3 minutes.

10. Disconnect both seat belt tensioner 4P connectors (see step 7 on page 24-24) and both seat belt buckle tensioner 4P connectors (see step 8 on page 24-24).

11. Disconnect SRS unit connector B (28P) from the SRS unit (see step 9 on page 24-24).

12. Disconnect the SRS inflator simulator from the SRS simulator lead. Do not disconnect the simulator lead from the front passenger's seat subharness 2P connector.

13. Check resistance between each terminal of the black SRS simulator lead (A) and body ground. There should be an open circuit (ohmmeter reads OL) or at least 1 MΩ.

FRONT PASSENGER'S SEAT SUBHARNESS 2P CONNECTOR

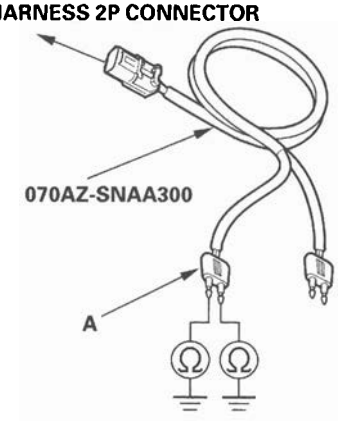

Is the resistance as specified?

YES—Faulty SRS unit or poor connection at SRS unit connector B (28P) and the SRS unit. Check the connection; if the connection is OK, replace the SRS unit (see page 24-176).■

NO—Go to step 14.

14. Disconnect floor wire harness 4P connector C554 (A) from front passenger's seat subharness 4P connector C554 (B).

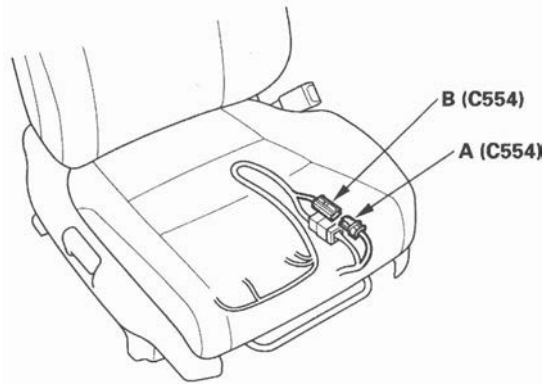

15. Check resistance between the No. 3 terminal of floor wire harness 4P connector C554 and body ground, and between the No. 4 terminal and body ground. There should be an open circuit (ohmmeter reads OL) or at least 1 MΩ.

FLOOR WIRE HARNESS 4P CONNECTOR C554

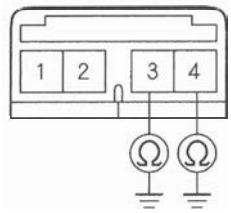

Wire side of female terminals

Is the resistance as specified?

YES—Short to ground in front passenger's seat subharness; replace the front passenger's seat subharness.■

NO—Short to ground in floor wire harness; replace the floor wire harness.■

DTC Troubleshooting (cont'd)

DTC 33-1x ("x" can be 0 thru 9 or A thru F): Open or Increased Resistance in Left Side Curtain Airbag Inflator

Special Tools Required
- SRS inflator simulator 07SAZ-TB4011A
- SRS simulator lead L 070AZ-SNAA300

NOTE: Before doing this troubleshooting procedure, review SRS Precautions and Procedures (see page 24-15).

1. Erase the DTC memory (see page 24-26).
2. Turn the ignition switch ON (II), and check that the SRS indicator comes on for about 6 seconds and then goes off.

   Does the SRS indicator stay on, and is DTC 33-1x indicated?

   YES—Go to step 3.

   NO—Intermittent failure, the system is OK at this time. Go to Troubleshooting Intermittent Failures (see page 24-27). If another DTC is indicated, go to the DTC Troubleshooting Index.
3. Turn the ignition switch OFF. Disconnect the negative cable from the battery, and wait for 3 minutes.
4. Remove the left side quarter pillar glass trim (see page 20-74), then disconnect the side wire harness 2P connector (A) from the left side curtain airbag connector (B).

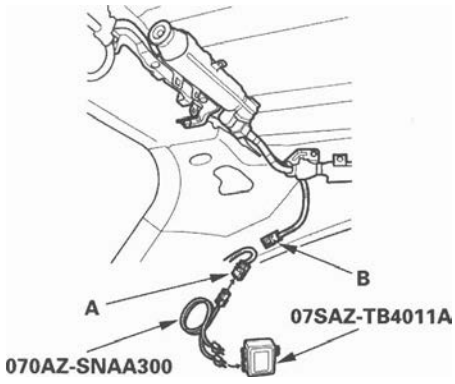

5. Connect the SRS inflator simulator (2 Ω connectors) and simulator lead L to the side wire harness.
6. Reconnect the negative cable to the battery.
7. Erase the DTC memory.
8. Read the DTC (see page 24-25).

   Is DTC 33-1x indicated?

   YES—Go to step 9.

   NO—Open or increased resistance in the left side curtain airbag; replace the left side curtain airbag (see page 24-165).■
9. Turn the ignition switch OFF. Disconnect the negative cable from the battery, and wait for 3 minutes.
10. Disconnect both seat belt tensioner 4P connectors (see step 7 on page 24-24) and both seat belt buckle tensioner 4P connectors (see step 8 on page 24-24).
11. Disconnect SRS unit connector B (28P) from the SRS unit (see step 9 on page 24-24).
12. Disconnect the SRS inflator simulator from the SRS simulator lead. Do not disconnect the simulator lead from the side wire harness 2P connector.

13. Check resistance between the terminals of the black SRS simulator lead (A). There should be 1.0 Ω or less.

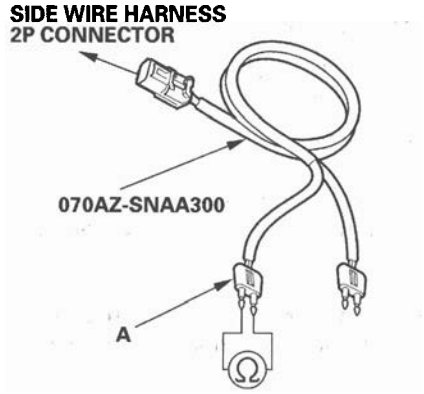

Is the resistance as specified?

YES—Faulty SRS unit or poor connection at the SRS unit connector B (28P) and the SRS unit. Check the connection; if the connection is OK, replace the SRS unit (see page 24-176).■

NO—Go to step 14.

14. Disconnect floor wire harness 4P connector C606 (A) from side wire harness 4P connector C606 (B).

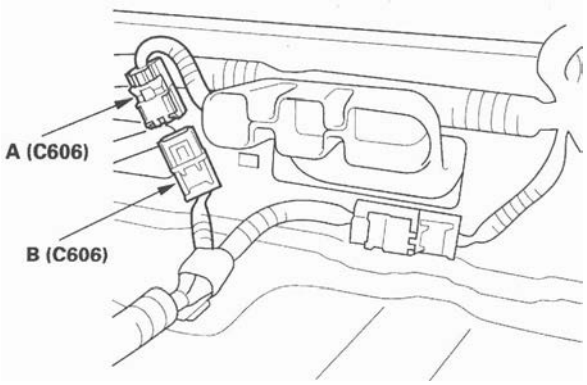

15. Check resistance between the No. 3 and No. 4 terminals of floor wire harness 4P connector C606 (A). There should be less than 1.0 Ω.

FLOOR WIRE HARNESS 4P CONNECTOR C606

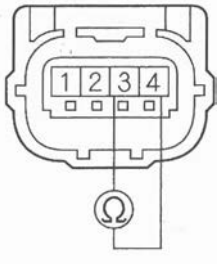

Terminal side of female terminals

Is the resistance as specified?

YES—Open or increased resistance in the side wire harness; replace the side wire harness.■

NO—Open or increased resistance in the floor wire harness; replace the floor wire harness.■

DTC Troubleshooting (cont'd)

DTC 33-3x ("x" can be 0 thru 9 or A thru F): Short to Another Wire or Decreased Resistance in Left Side Curtain Airbag Inflator

Special Tools Required
- SRS inflator simulator 07SAZ-TB4011A
- SRS simulator lead L 070AZ-SNAA300
- SRS short canceller 070AZ-SAA0100

NOTE: Before doing this troubleshooting procedure, review SRS Precautions and Procedures (see page 24-15).

1. Erase the DTC memory (see page 24-26).
2. Turn the ignition switch ON (II), and check that the SRS indicator comes on for about 6 seconds and then goes off.

   Does the SRS indicator stay on, and is DTC 33-3x indicated?

   YES—Go to step 3.

   NO—Intermittent failure, the system is OK at this time. Go to Troubleshooting Intermittent Failures (see page 24-27). If another DTC is indicated, go to the DTC Troubleshooting Index.
3. Turn the ignition switch OFF. Disconnect the negative cable from the battery, and wait for 3 minutes.
4. Remove the left side quarter pillar glass trim (see page 20-74), then disconnect the side wire harness 2P connector (A) from the left side curtain airbag connector (B).

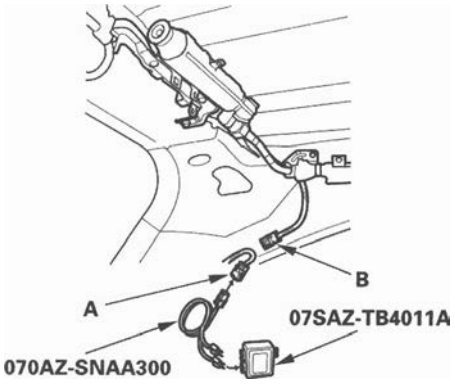

5. Connect the SRS inflator simulator (2 Ω connectors) and simulator lead L to the side wire harness.
6. Reconnect the negative cable to the battery.
7. Erase the DTC memory.
8. Read the DTC (see page 24-25).

   Is DTC 33-3x indicated?

   YES—Go to step 9.

   NO—Short to another wire in the left side curtain airbag inflator; replace the left side curtain airbag (see page 24-165). ■
9. Turn the ignition switch OFF. Disconnect the negative cable from the battery, and wait for 3 minutes.
10. Disconnect both seat belt tensioner 4P connectors (see step 7 on page 24-24) and both seat belt buckle tensioner 4P connectors (see step 8 on page 24-24).
11. Disconnect SRS unit connector B (28P) from the SRS unit (see step 9 on page 24-24).
12. Disconnect the SRS inflator simulator from the SRS simulator lead. Do not disconnect the simulator lead from the side wire harness 2P connector.
13. Connect the SRS short canceller (070AZ-SAA0100) to the No. 21 and No. 22 terminals of SRS unit connector B (28P) (see page 24-20).

14. Check resistance between the terminals of the black SRS simulator lead (A). There should be an open circuit (ohmmeter reads OL) or at least 1 MΩ.

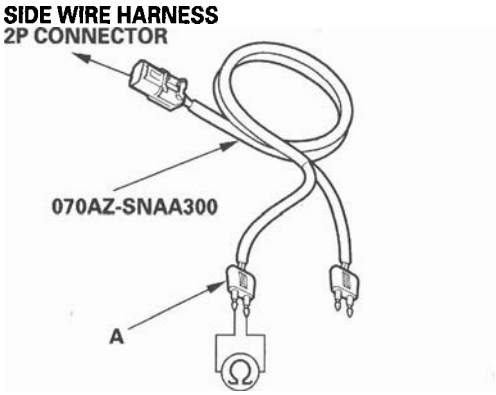

Is the resistance as specified?

YES—Faulty SRS unit or poor connection at SRS unit connector B (28P) and the SRS unit. Check the connection; if the connection is OK, replace the SRS unit (see page 24-176).■

NO—Go to step 15.

15. Disconnect floor wire harness 4P connector C606 (A) from side wire harness 4P connector C606 (B).

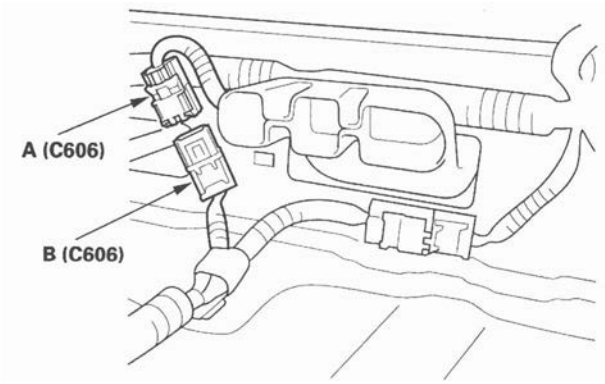

16. Check resistance between the No. 3 and No. 4 terminals of floor wire harness 4P connector C606 (A). There should be an open circuit (ohmmeter reads OL) or at least 1 MΩ.

FLOOR WIRE HARNESS 4P CONNECTOR C606

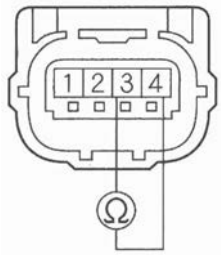

Terminal side of female terminals

Is the resistance as specified?

YES—Short to another wire in the side wire harness; replace the side wire harness.■

NO—Short to another wire in the floor wire harness; replace the floor wire harness.■

DTC Troubleshooting (cont'd)

DTC 33-8x ("x" can be 0 thru 9 or A thru F): Short to Power in Left Side Curtain Airbag Inflator

Special Tools Required
- SRS inflator simulator 07SAZ-TB4011A
- SRS simulator lead L 070AZ-SNAA300

NOTE: Before doing this troubleshooting procedure, review SRS Precautions and Procedures (see page 24-15).

1. Erase the DTC memory (see page 24-26).
2. Turn the ignition switch ON (II), and check that the SRS indicator comes on for about 6 seconds and then goes off.

   Does the SRS indicator stay on, and is DTC 33-8x indicated?

   YES—Go to step 3.

   NO—Intermittent failure, the system is OK at this time. Go to Troubleshooting Intermittent Failures (see page 24-27). If another DTC is indicated, go to the DTC Troubleshooting Index.
3. Turn the ignition switch OFF. Disconnect the negative cable from the battery, and wait for 3 minutes.
4. Remove the left side quarter pillar glass trim (see page 20-74), then disconnect the side wire harness 2P connector (A) from the left side curtain airbag connector (B).

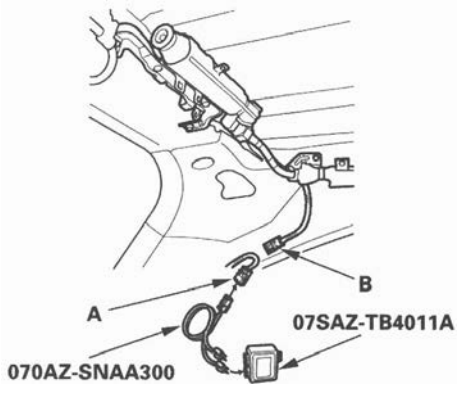

5. Connect the SRS inflator simulator (2 Ω connectors) and simulator lead L to the side wire harness.
6. Reconnect the negative cable to the battery.
7. Erase the DTC memory.
8. Read the DTC (see page 24-25).

   Is DTC 33-8x indicated?

   YES—Go to step 9.

   NO—Short to power in the left side curtain airbag inflator; replace the left side curtain airbag (see page 24-165).■
9. Turn the ignition switch OFF. Disconnect the negative cable from the battery, and wait for 3 minutes.
10. Disconnect both seat belt tensioner 4P connectors (see step 7 on page 24-24) and both seat belt buckle tensioner 4P connectors (see step 8 on page 24-24).
11. Disconnect the SRS unit connector B (28P) from the SRS unit (see step 9 on page 24-24).
12. Disconnect the SRS inflator simulator from the SRS simulator lead. Do not disconnect the simulator lead from the side wire harness 2P connector.
13. Reconnect the negative cable to the battery.
14. Turn the ignition switch ON (II).

15. Check for voltage between each terminal of the black SRS simulator lead (A) and body ground. There should be 0.5 V or less.

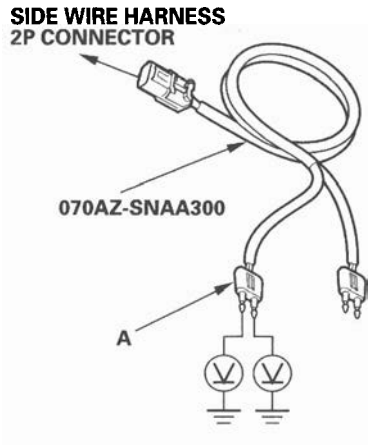

Is the voltage as specified?

YES—Faulty SRS unit or poor connection at SRS unit connector B (28P) and the SRS unit. Check the connection; if the connection is OK, replace the SRS unit (see page 24-176).■

NO—Go to step 16.

16. Turn the ignition switch OFF.

17. Disconnect floor wire harness 4P connector C606 (A) from side wire harness 4P connector C606 (B).

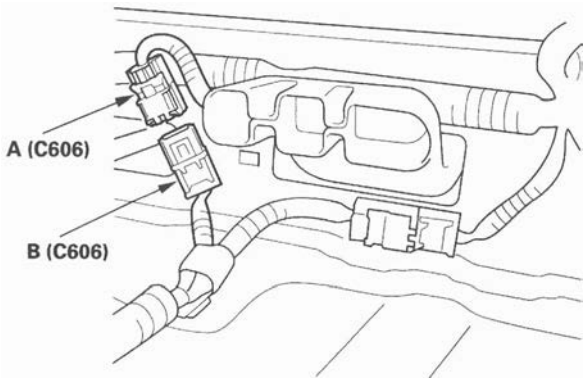

18. Check for voltage between the No. 3 terminal of floor wire harness 4P connector C606 (A) and body ground, and between the No. 4 terminal and body ground. There should be less than 0.5 V.

FLOOR WIRE HARNESS 4P CONNECTOR C606

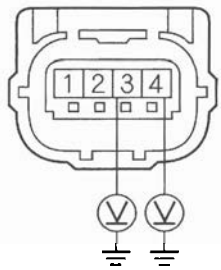

Terminal side of female terminals

Is the voltage as specified?

YES—Short to power in the side wire harness; replace the side wire harness.■

NO—Short to power in the floor wire harness; replace the floor wire harness.■

DTC Troubleshooting (cont'd)

DTC 33-9x ("x" can be 0 thru 9 or A thru F): Short to Ground in Left Side Curtain Airbag Inflator

Special Tools Required
- SRS inflator simulator 07SAZ-TB4011A
- SRS simulator lead L 070AZ-SNAA300

NOTE: Before doing this troubleshooting procedure, review SRS Precautions and Procedures (see page 24-15).

1. Erase the DTC memory (see page 24-26).
2. Turn the ignition switch ON (II), and check that the SRS indicator comes on for about 6 seconds and then goes off.

   Does the SRS indicator stay on, and is DTC 33-9x indicated?

   YES—Go to step 3.

   NO—Intermittent failure, the system is OK at this time. Go to Troubleshooting Intermittent Failures (see page 24-27). If another DTC is indicated, go to the DTC Troubleshooting Index.
3. Turn the ignition switch OFF. Disconnect the negative cable from the battery, and wait for 3 minutes.
4. Remove the left side quarter pillar glass trim (see page 20-74), then disconnect the side wire harness 2P connector (A) from the left side curtain airbag connector (B).

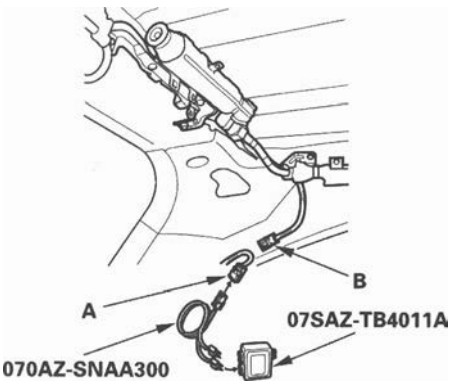

5. Connect the SRS inflator simulator (2 Ω connectors) and simulator lead L to the side wire harness.
6. Reconnect the negative cable to the battery.
7. Erase the DTC memory.
8. Read the DTC (see page 24-25).

   Is DTC 33-9x indicated?

   YES—Go to step 9.

   NO—Short to ground in the left side curtain airbag inflator; replace the left side curtain airbag (see page 24-165). ■
9. Turn the ignition switch OFF. Disconnect the negative cable from the battery, and wait for 3 minutes.
10. Disconnect both seat belt tensioner 4P connectors (see step 7 on page 24-24) and both seat belt buckle tensioner 4P connectors (see step 8 on page 24-24).
11. Disconnect SRS unit connector B (28P) from the SRS unit (see step 9 on page 24-24).
12. Disconnect the SRS inflator simulator from the SRS simulator lead. Do not disconnect the simulator lead from the side wire harness 2P connector.

13. Check resistance between each terminal of the black SRS simulator lead (A) and body ground. There should be an open circuit (ohmmeter reads OL) or at least 1 MΩ.

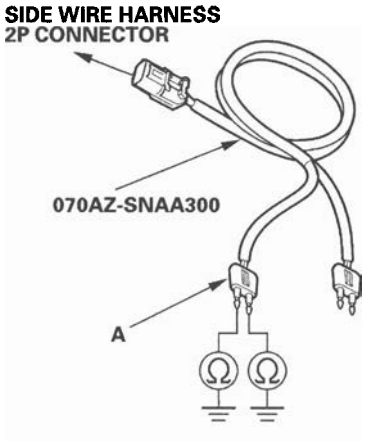

Is the resistance as specified?

YES—Faulty SRS unit or poor connection at SRS unit connector B (28P) and the SRS unit. Check the connection; if the connection is OK, replace the SRS unit (see page 24-176).■

NO—Go to step 14.

14. Disconnect floor wire harness 4P connector C606 (A) from side wire harness 4P connector C606 (B).

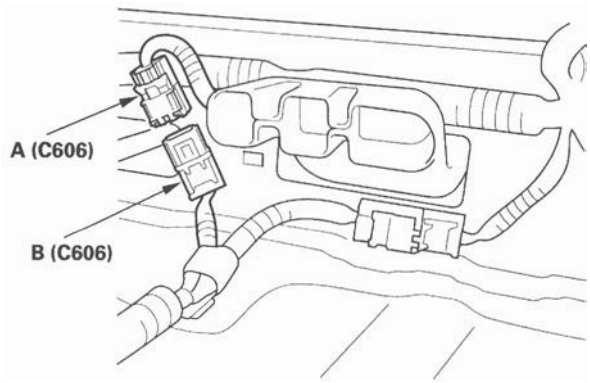

15. Check resistance between the No. 3 terminal of floor wire harness 4P connector C606 (A) and body ground, and between the No. 4 terminal and body ground. There should be an open circuit (ohmmeter reads OL) or at least 1 MΩ.

FLOOR WIRE HARNESS 4P CONNECTOR C606

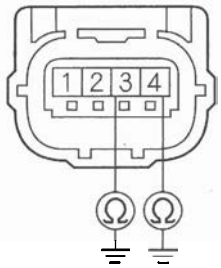

Terminal side of female terminals

Is the resistance as specified?

YES—Short to ground in the side wire harness; replace the side wire harness.■

NO—Short to ground in the floor wire harness; replace the floor wire harness.■

DTC Troubleshooting (cont'd)

DTC 34-1x ("x" can be 0 thru 9 or A thru F): Open or Increased Resistance in Right Side Curtain Airbag Inflator

Special Tools Required
- SRS inflator simulator 07SAZ-TB4011A
- SRS simulator lead L 070AZ-SNAA300

NOTE: Before doing this troubleshooting procedure, review SRS Precautions and Procedures (see page 24-15).

1. Erase the DTC memory (see page 24-26).
2. Turn the ignition switch ON (II), and check that the SRS indicator comes on for about 6 seconds and then goes off.

   Does the SRS indicator stay on, and is DTC 34-1x indicated?

   YES—Go to step 3.

   NO—Intermittent failure, the system is OK at this time. Go to Troubleshooting Intermittent Failures (see page 24-27). If another DTC is indicated, go to the DTC Troubleshooting Index.
3. Turn the ignition switch OFF. Disconnect the negative cable from the battery, and wait for 3 minutes.
4. Remove the right side quarter pillar glass trim (see page 20-74), then disconnect the side wire harness 2P connector (A) from the right side curtain airbag connector (B).

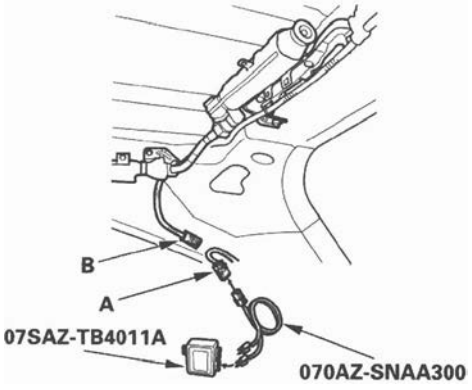

5. Connect the SRS inflator simulator (2 Ω connectors) and simulator lead L to the side wire harness.
6. Reconnect the negative cable to the battery.
7. Erase the DTC memory.
8. Read the DTC (see page 24-25).

   Is DTC 34-1x indicated?

   YES—Go to step 9.

   NO—Open or increased resistance in the right side curtain airbag inflator, replace the right side curtain airbag (see page 24-165).■
9. Turn the ignition switch OFF. Disconnect the negative cable from the battery, and wait for 3 minutes.
10. Disconnect both seat belt tensioner 4P connectors (see step 7 on page 24-24) and both seat belt buckle tensioner 4P connectors (see step 8 on page 24-24).
11. Disconnect SRS unit connector B (28P) from the SRS unit (see step 9 on page 24-24).
12. Disconnect the SRS inflator simulator from the SRS simulator lead. Do not disconnect the simulator lead from the side wire harness 2P connector.

13. Check resistance between the terminals of the black SRS simulator lead (A). There should be 1.0 Ω or less.

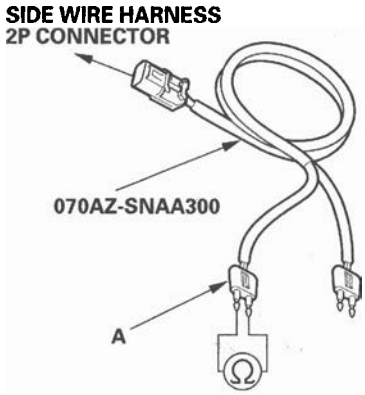

Is the resistance as specified?

YES—Faulty SRS unit or poor connection at SRS unit connector B (28P) and the SRS unit. Check the connection; if the connection is OK, replace the SRS unit (see page 24-176).■

NO—Go to step 14.

14. Disconnect floor wire harness 4P connector C606 (A) from side wire harness 4P connector C606 (B).

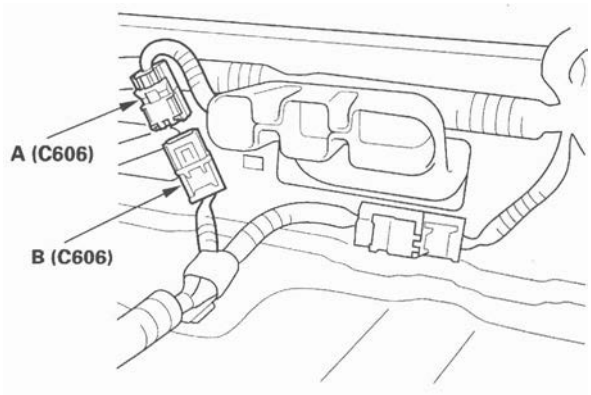

15. **Check resistance between the No. 1 and No. 2** terminals of floor wire harness 4P connector C606 (A). There should be less than 1.0 Ω.

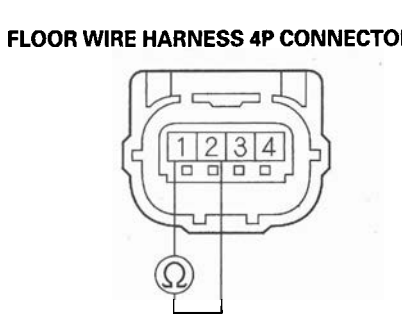

Is the resistance as specified?

YES—Open or increased resistance in the side wire harness; replace the side wire harness.■

NO—Open or increased resistance in the floor wire harness; replace the floor wire harness.■

DTC Troubleshooting (cont'd)

DTC 34-3x ("x" can be 0 thru 9 or A thru F): Short to Another Wire or Decreased Resistance in Right Side Curtain Airbag Inflator

Special Tools Required
- SRS inflator simulator 07SAZ-TB4011A
- SRS simulator lead L 070AZ-SNAA300
- SRS short canceller 070AZ-SAA0100

NOTE: Before doing this troubleshooting procedure, review SRS Precautions and Procedures (see page 24-15).

1. Erase the DTC memory (see page 24-26).
2. Turn the ignition switch ON (II), and check that the SRS indicator comes on for about 6 seconds and then goes off.

   Does the SRS indicator stay on, and is DTC 34-3x indicated?
   YES—Go to step 3.

   NO—Intermittent failure, the system is OK at this time. Go to Troubleshooting Intermittent Failures (see page 24-27). If another DTC is indicated, go to the DTC Troubleshooting Index.
3. Turn the ignition switch OFF. Disconnect the negative cable from the battery, and wait for 3 minutes.
4. Remove the right side quarter pillar glass trim (see page 20-74), then disconnect the side wire harness 2P connector (A) from the right side curtain airbag connector (B).

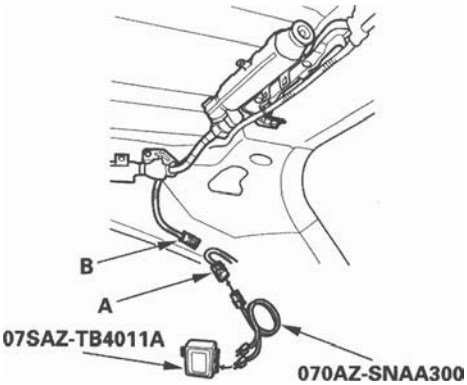

5. Connect the SRS inflator simulator (2 Ω connectors) and simulator lead L to the side wire harness.
6. Reconnect the negative cable to the battery.
7. Erase the DTC memory.
8. Read the DTC (see page 24-25).

   Is DTC 34-3x indicated?

   YES—Go to step 9.

   NO—Short to another wire in the right side curtain airbag inflator; replace the right side curtain airbag (see page 24-165). ■
9. Turn the ignition switch OFF. Disconnect the negative cable from the battery, and wait for 3 minutes.
10. Disconnect both seat belt tensioner 4P connectors (see step 7 on page 24-24) and both seat belt buckle tensioner 4P connectors (see step 8 on page 24-24).
11. Disconnect SRS unit connector B (28P) from the SRS unit (see step 9 on page 24-24).
12. Disconnect the SRS inflator simulator from the SRS simulator lead. Do not disconnect the simulator lead from the side wire harness 2P connector.
13. Connect the SRS short canceller (070AZ-SAA0100) to the No. 23 and No. 24 terminals of SRS unit connector B (28P) (see page 24-20).

14. Check resistance between the terminals of the black SRS simulator lead (A). There should be an open circuit (ohmmeter reads OL) or at least 1 MΩ.

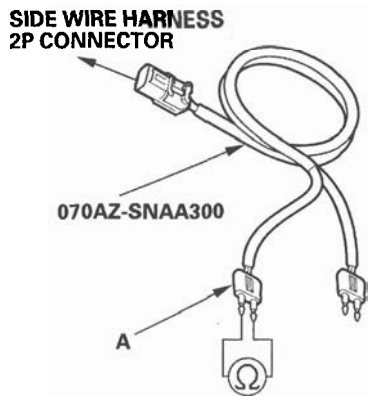

Is the resistance as specified?

YES—Faulty SRS unit or poor connection at SRS unit connector B (28P) and the SRS unit. Check the connection; if the connection is OK, replace the SRS unit (see page 24-176).■

NO—Go to step 15.

15. Disconnect floor wire harness 4P connector C606 (A) from side wire harness 4P connector C606 (B).

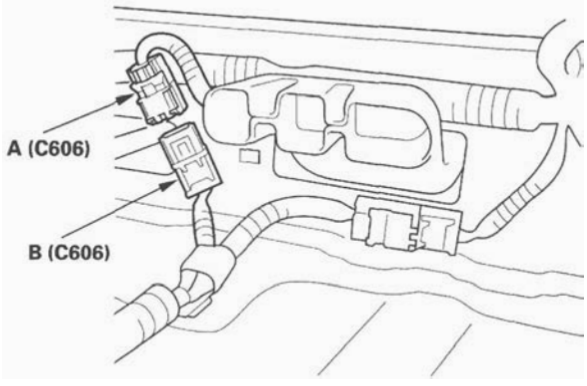

16. Check resistance between the No. 1 and No. 2 terminals of floor wire harness 4P connector C606 (A). There should be an open circuit (ohmmeter reads OL) or at least 1 MΩ.

FLOOR WIRE HARNESS 4P CONNECTOR C606

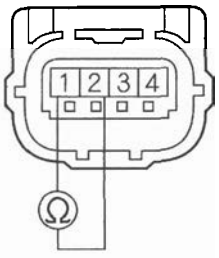

Terminal side of female terminals

Is the resistance as specified?

YES—Short to another wire in the side wire harness; replace the side wire harness.■

NO—Short to another wire in the floor wire harness; replace the floor wire harness.■

DTC Troubleshooting (cont'd)

DTC 34-8x ("x" can be 0 thru 9 or A thru F): Short to Power in Right Side Curtain Airbag Inflator

Special Tools Required
- SRS inflator simulator 07SAZ-TB4011A
- SRS simulator lead L 070AZ-SNAA300

NOTE: Before doing this troubleshooting procedure, review SRS Precautions and Procedures (see page 24-15).

1. Erase the DTC memory (see page 24-26).
2. Turn the ignition switch ON (II), and check that the SRS indicator comes on for about 6 seconds and then goes off.

   Does the SRS indicator stay on, and is DTC 34-8x indicated?

   YES—Go to step 3.

   NO—Intermittent failure, the system is OK at this time. Go to Troubleshooting Intermittent Failures (see page 24-27). If another DTC is indicated, go to the DTC Troubleshooting Index.
3. Turn the ignition switch OFF. Disconnect the negative cable from the battery, and wait for 3 minutes.
4. Remove the right side quarter pillar glass trim (see page 20-74), then disconnect the side wire harness 2P connector (A) from the right side curtain airbag connector (B).

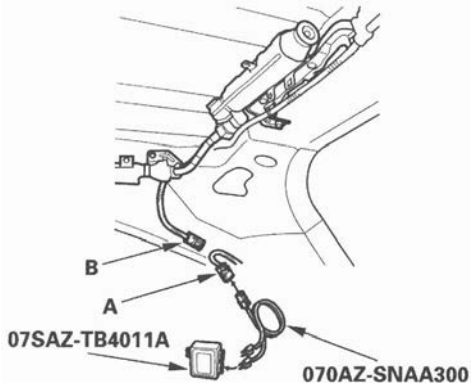

5. Connect the SRS inflator simulator (2 Ω connectors) and simulator lead L to the side wire harness.
6. Reconnect the negative cable to the battery.
7. Erase the DTC memory.
8. Read the DTC (see page 24-25).

   Is DTC 34-8x indicated?

   YES—Go to step 9.

   NO—Short to power in the right side curtain airbag inflator; replace the right side curtain airbag (see page 24-165). ■
9. Turn the ignition switch OFF. Disconnect the negative cable from the battery, and wait for 3 minutes.
10. Disconnect both seat belt tensioner 4P connectors (see step 7 on page 24-24) and both seat belt buckle tensioner 4P connectors (see step 8 on page 24-24).
11. Disconnect SRS unit connector B (28P) from the SRS unit (see step 9 on page 24-24).
12. Disconnect the SRS inflator simulator from the SRS simulator lead. Do not disconnect the simulator lead from the side wire harness 2P connector.
13. Reconnect the negative cable to the battery.
14. Turn the ignition switch ON (II).

15. Check for voltage between each terminal of the black SRS simulator lead (A) and body ground. There should be 0.5 V or less.

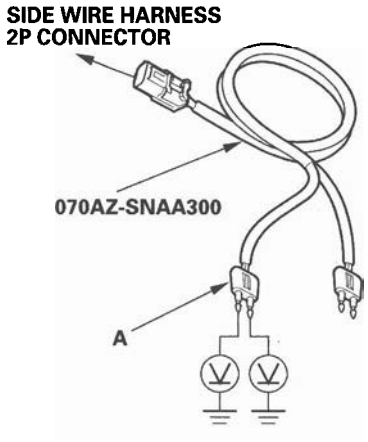

Is the voltage as specified?

YES—Faulty SRS unit or poor connection at SRS unit connector B (28P) and the SRS unit. Check the connection; if the connection is OK, replace the SRS unit (see page 24-176). ■

NO—Go to step 16.

16. Turn the ignition switch OFF.

17. Disconnect floor wire harness 4P connector C606 (A) from side wire harness 4P connector C606 (B).

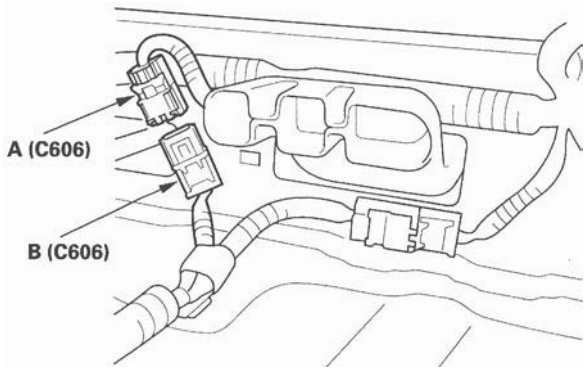

18. Check for voltage between the No. 1 terminal of floor wire harness 4P connector C606 (A) and body ground, and between the No. 2 terminal and body ground. There should be less than 0.5 V.

FLOOR WIRE HARNESS 4P CONNECTOR C606

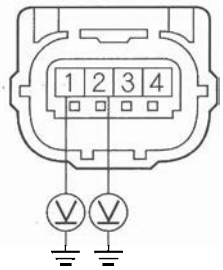

Terminal side of female terminals

Is the voltage as specified?

YES—Short to power in the side wire harness; replace the side wire harness. ■

NO—Short to power in the floor wire harness; replace the floor wire harness. ■

DTC Troubleshooting (cont'd)

DTC 34-9x ("x" can be 0 thru 9 or A thru F): Short to Ground in Right Side Curtain Airbag Inflator

Special Tools Required
- SRS inflator simulator 07SAZ-TB4011A
- SRS simulator lead L 070AZ-SNAA300

NOTE: Before doing this troubleshooting procedure, review SRS Precautions and Procedures (see page 24-15).

1. Erase the DTC memory (see page 24-26).
2. Turn the ignition switch ON (II), and check that the SRS indicator comes on for about 6 seconds and then goes off.

   Does the SRS indicator stay on, and is DTC 34-9x indicated?

   YES—Go to step 3.

   NO—Intermittent failure, the system is OK at this time. Go to Troubleshooting Intermittent Failures (see page 24-27). If another DTC is indicated, go to the DTC Troubleshooting Index.
3. Turn the ignition switch OFF. Disconnect the negative cable from the battery, and wait for 3 minutes.
4. Remove the right side quarter pillar glass trim (see page 20-74), then disconnect the side wire harness 2P connector (A) from the right side curtain airbag connector (B).

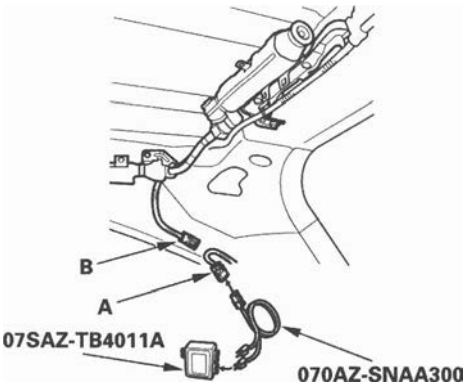

5. Connect the SRS inflator simulator (2 Ω connectors) and simulator lead L to the side wire harness.
6. Reconnect the negative cable to the battery.
7. Erase the DTC memory.
8. Read the DTC (see page 24-25).

   Is DTC 34-9x indicated?

   YES—Go to step 9.

   NO—Short to ground in the right side curtain airbag inflator; replace the right side curtain airbag (see page 24-165).■
9. Turn the ignition switch OFF. Disconnect the negative cable from the battery, and wait for 3 minutes.
10. Disconnect both seat belt tensioner 4P connectors (see step 7 on page 24-24) and both seat belt buckle tensioner 4P connectors (see step 8 on page 24-24).
11. Disconnect SRS unit connector B (28P) from the SRS unit (see step 9 on page 24-24).
12. Disconnect the SRS inflator simulator from the SRS simulator lead. Do not disconnect the simulator lead from the side wire harness 2P connector.

13. Check resistance between each terminal of the black SRS simulator lead (A) and body ground. There should be an open circuit (ohmmeter reads OL) or at least 1 MΩ.

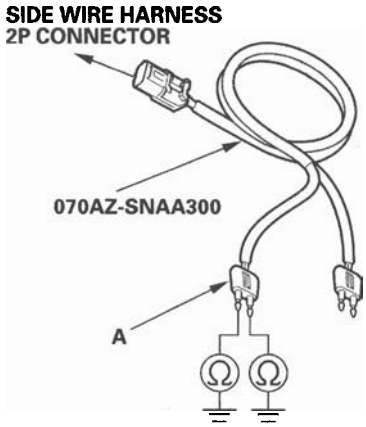

Is the resistance as specified?

YES—Faulty SRS unit or poor connection at SRS unit connector B (28P) and the SRS unit. Check the connection; if the connection is OK, replace the SRS unit (see page 24-176).■

NO—Go to step 14.

14. Disconnect floor wire harness 4P connector C606 (A) from side wire harness 4P connector C606 (B).

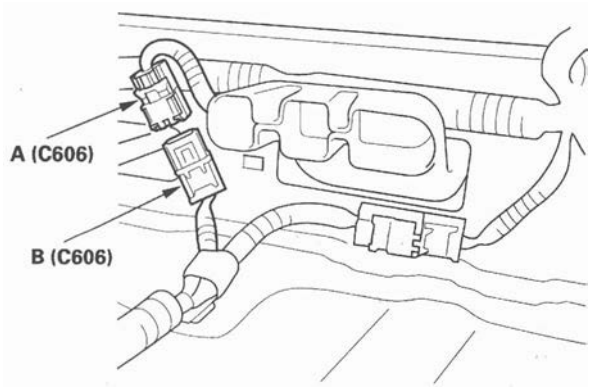

15. Check resistance between the No. 1 terminal of floor wire harness 4P connector C606 (A) and body ground, and between the No. 2 terminal and body ground. There should be an open circuit (ohmmeter reads OL) at least 1 MΩ.

FLOOR WIRE HARNESS 4P CONNECTOR C606

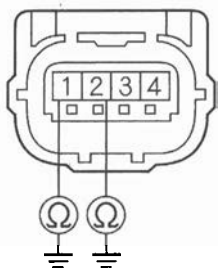

Terminal side of female terminals

Is the resistance as specified?

YES—Short to ground in the side wire harness; replace the side wire harness.■

NO—Short to ground in the floor wire harness; replace the floor wire harness.■

DTC Troubleshooting (cont'd)

DTC 41-1x ("x" can be 0 thru 9 or A thru F): No Signal From the Left Front Impact Sensor

Special Tools Required
- SRS inflator simulator 07SAZ-TB4011A
- SRS simulator lead L 070AZ-SNAA300

NOTE: Before doing this troubleshooting procedure, review SRS Precautions and Procedures (see page 24-15).

1. Erase the DTC memory (see page 24-26).
2. Turn the ignition switch ON (II), and check that the SRS indicator comes on for about 6 seconds and then goes off.

   Does the SRS indicator stay on, and is DTC 41-1x indicated?

   YES—Go to step 3.

   NO—Intermittent failure, the system is OK at this time. Go to Troubleshooting Intermittent Failures (see page 24-27). If another DTC is indicated, go to the DTC Troubleshooting Index.
3. Turn the ignition switch OFF.
4. Disconnect the negative cable from the battery, and wait for 3 minutes.
5. Check the connections between SRS unit connector A (28P) and the SRS unit, between the engine compartment wire harness 2P connector and the left front impact sensor (see page 24-13), and at connector C503 (see page 22-22).

   Are the connections OK?

   YES—Go to step 6.

   NO—Repair the poor connections and retest. If DTC 41-1x is still present, go to step 6.
6. Disconnect the engine compartment wire harness 2P connector (A) from the left front impact sensor.

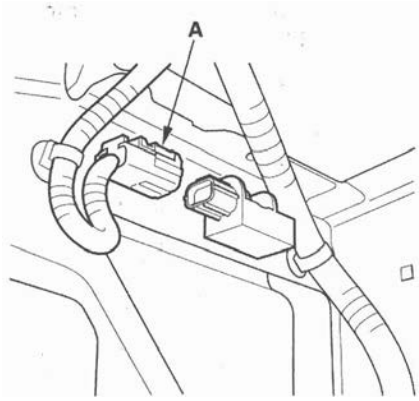

7. Disconnect SRS unit connector A (28P) from the SRS unit (see step 9 on page 24-24).
8. Check resistance between the No. 15 and No. 27 terminals of SRS unit connector A (28P). There should be an open circuit (ohmmeter reads OL) or at least 1 MΩ.

SRS UNIT CONNECTOR A (28P)

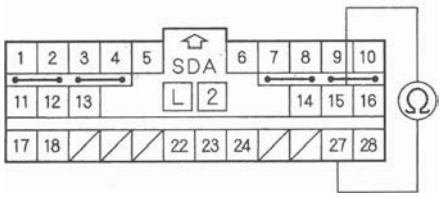

Wire side of female terminals

Is the resistance as specified?

YES—Go to step 9.

NO—Short in the engine compartment wire harness or dashboard wire harness; replace the faulty harness. ■

9. Check resistance between the No. 15 terminal of SRS unit connector A (28P) and body ground, and between the No. 27 terminal and body ground. There should be an open circuit (ohmmeter reads OL) or at least 1 MΩ.

SRS UNIT CONNECTOR A (28P)

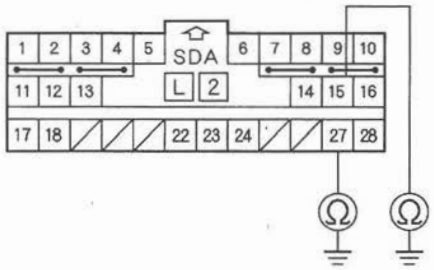

Wire side of female terminals

Is the resistance as specified?

YES—Go to step 10.

NO—Short to ground in the dashboard wire harness or the engine compartment wire harness; replace the faulty harness.■

10. Reconnect the negative cable to the battery.

11. Turn the ignition switch ON (II).

12. Check for voltage between the No. 15 terminal of SRS unit connector A (28P) and body ground, and between the No. 27 terminal and body ground. There should be 1 V or less.

SRS UNIT CONNECTOR A (28P)

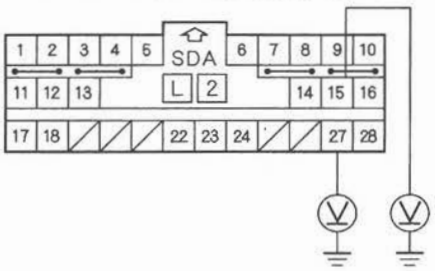

Wire side of female terminals

Is the voltage as specified?

YES—Go to step 13.

NO—Short to power in the engine compartment wire harness or the dashboard wire harness; replace the faulty harness.■

13. Turn the ignition switch OFF.

14. Connect the SRS inflator simulator (jumper connector) and the black lead (A) of simulator lead L to the engine compartment wire harness 2P connector (B).

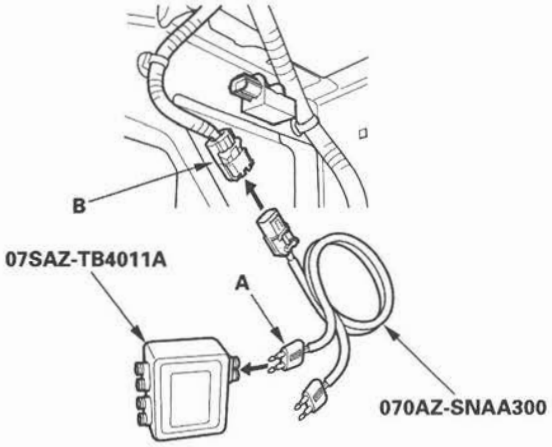

(cont'd)

DTC Troubleshooting (cont'd)

15. Check resistance between the No. 15 and No. 27 terminals of SRS unit connector A (28P). There should be 0—1.0 Ω.

SRS UNIT CONNECTOR A (28P)

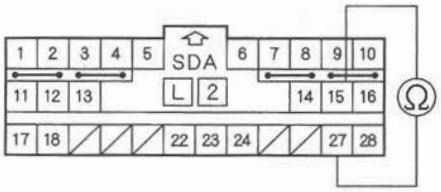

Wire side of female terminals

Is the resistance as specified?

YES—Faulty left front impact sensor or SRS unit; replace the left front impact sensor (see page 24-182). If the problem is still present, replace the SRS unit (see page 24-176).■

NO—Poor connection at C503, open in the engine compartment wire harness, or open in the dashboard wire harness. Inspect C503 (see page 22-22). If it is OK, replace the faulty harness.■

DTC 42-1x ("x" can be 0 thru 9 or A thru F): No Signal From the Right Front Impact Sensor

Special Tools Required
- SRS inflator simulator 07SAZ-TB4011A
- SRS simulator lead L 070AZ-SNAA300

NOTE: Before doing this troubleshooting procedure, review SRS Precautions and Procedures (see page 24-15).

1. Erase the DTC memory (see page 24-26).
2. Turn the ignition switch ON (II), and check that the SRS indicator comes on for about 6 seconds and then goes off.

   Does the SRS indicator stay on, and is DTC 42-1x indicated?

   YES—Go to step 3.

   NO—Intermittent failure, the system is OK at this time. Go to Troubleshooting Intermittent Failures (see page 24-27). If another DTC is indicated, go to the DTC Troubleshooting Index.
3. Turn the ignition switch OFF.
4. Disconnect the negative cable from the battery, and wait for 3 minutes.
5. Check the connections between SRS unit connector A (28P) and the SRS unit, between the engine compartment wire harness 2P connector and the right front impact sensor (see page 24-13), and at connector C503 (see page 22-22).

   Are the connections OK?

   YES—Go to step 6.

   NO—Repair the poor connections and retest. If DTC 42-1x is still present, go to step 6.

6. Disconnect the engine compartment wire harness 2P connector (A) from the right front impact sensor.

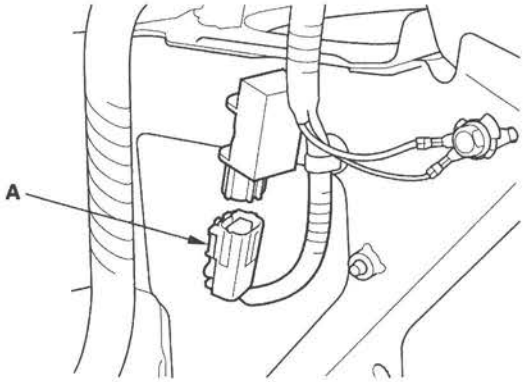

7. Disconnect SRS unit connector A (28P) from the SRS unit (see step 9 on page 24-24).

8. Check resistance between the No. 16 and No. 28 terminals of SRS unit connector A (28P). There should be an open circuit (ohmmeter reads OL) or at least 1 MΩ.

SRS UNIT CONNECTOR A (28P)

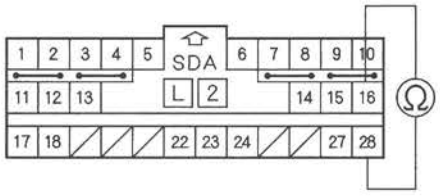

Wire side of female terminals

Is the resistance as specified?

YES—Go to step 9.

NO—Short in the engine compartment wire harness or dashboard wire harness; replace the faulty harness.■

9. Check resistance between the No. 16 terminal of SRS unit connector A (28P) and body ground, and between the No. 28 terminal and body ground. There should be an open circuit (ohmmeter reads OL) or at least 1 MΩ.

SRS UNIT CONNECTOR A (28P)

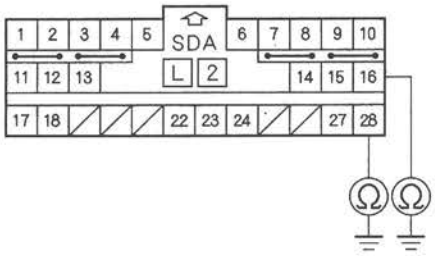

Wire side of female terminals

Is the resistance as specified?

YES—Go to step 10.

NO—Short to ground in the dashboard wire harness or the engine compartment wire harness; replace the faulty harness.■

10. Reconnect the negative cable to the battery.

11. Turn the ignition switch ON (II).

(cont'd)

DTC Troubleshooting (cont'd)

12. Check for voltage between the No. 16 terminal of SRS unit connector A (28P) and body ground, and between the No. 28 terminal and body ground. There should be 1 V or less.

SRS UNIT CONNECTOR A (28P)

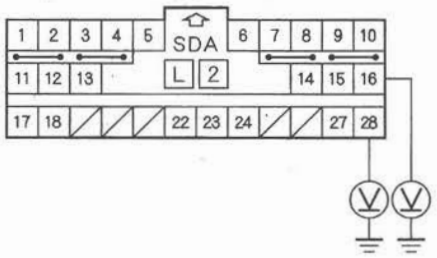

Wire side of female terminals

Is the voltage as specified?

YES—Go to step 13.

NO—Short to power in the engine compartment wire harness or dashboard wire harness; replace the faulty harness. ■

13. Turn the ignition switch OFF.

14. Connect the SRS inflator simulator (jumper connector) and the black lead (A) of simulator lead L to the engine compartment wire harness 2P connector (B).

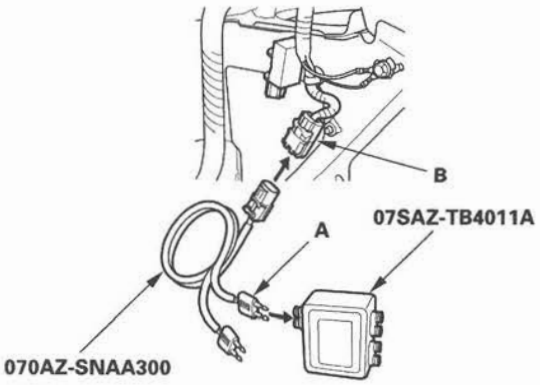

15. Check resistance between the No. 16 and No. 28 terminals of SRS unit connector A (28P). There should be 0—1.0 Ω.

SRS UNIT CONNECTOR A (28P)

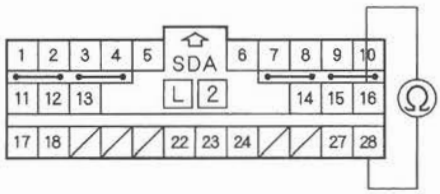

Wire side of female terminals

Is the resistance as specified?

YES—Faulty right front impact sensor or SRS unit; replace the right front impact sensor (see page 24-182). If the problem is still present, replace the SRS unit (see page 24-176). ■

NO—Poor connection at C503, open in the engine compartment wire harness, or open in the dashboard wire harness. Inspect C503 (see page 22-22). If it is OK, replace the faulty harness. ■

DTC 41-2x, 41-3x, 41-Bx ("x" can be 0 thru 9 or A thru F): Internal Failure of the Left Front Impact Sensor

DTC 42-2x, 42-3x, 42-Bx ("x" can be 0 thru 9 or A thru F): Internal Failure of Right Front Impact Sensor

NOTE: Before doing this troubleshooting procedure, review SRS Precautions and Procedures (see page 24-15).

1. Erase the DTC memory (see page 24-26).
2. Turn the ignition switch ON (II), and check that the SRS indicator comes on for about 6 seconds and then goes off.

   Does the SRS indicator stay on, and is DTC 41-2x, 41-3x, 41-Bx, 42-2x, 42-3x, or 42-Bx indicated?

   YES—Replace the left or right front impact sensor (see page 24-182). If the DTC returns, replace the SRS unit (see page 24-176).■

   NO—Intermittent failure, the system is OK at this time. Go to Troubleshooting Intermittent Failures (see page 24-27). If another DTC is indicated, go to the DTC Troubleshooting Index.

DTC Troubleshooting (cont'd)

DTC 43-1x ("x" can be 0 thru 9 or A thru F): No Signal From the Left Side Impact Sensor (first)

Special Tools Required
- SRS inflator simulator 07SAZ-TB4011A
- SRS simulator lead L 070AZ-SNAA300

NOTE: Before doing this troubleshooting procedure, review SRS Precautions and Procedures (see page 24-15).

1. Erase the DTC memory (see page 24-26).
2. Turn the ignition switch ON (II), and wait for 10 seconds.
3. Read the DTC (see page 24-25).

   Is DTC 43-11 indicated?

   YES—Go to step 6.

   NO—Go to step 4.
4. Read the DTC.

   Is DTC 43-12 indicated?

   YES—Go to step 5.

   NO—Intermittent failure, the system is OK at this time. Go to Troubleshooting Intermittent Failures (see page 24-27). If DTC 43-1x except DTC 43-11 and 43-12 is indicated, faulty left side impact sensor (first); replace the left side impact sensor (first) (see page 24-177).■
5. Read the DTC.

   Is DTC 45-11 also indicated?

   YES—Faulty left side impact sensor (first); replace the left side impact sensor (first) (see page 24-177).

   NO—Go to step 6.
6. Turn the ignition switch OFF.
7. Disconnect the negative cable from the battery, and wait for 3 minutes.
8. Disconnect both seat belt tensioner connectors (see step 7 on page 24-24) and both seat belt buckle tensioner connectors (see step 8 on page 24-24).
9. Disconnect the floor wire harness 4P connector (A) from the left side impact sensor (first) (see page 24-177).

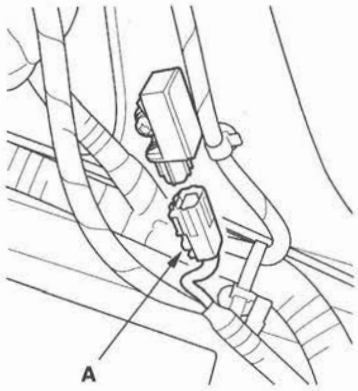

10. Disconnect SRS unit connector B (28P) from the SRS unit (see step 9 on page 24-24).

11. Check resistance between the No. 25 and No. 26 terminals of SRS unit connector B (28P). There should be an open circuit (ohmmeter reads OL) or at least 1 MΩ.

SRS UNIT CONNECTOR B (28P)

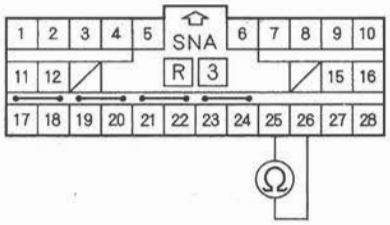

Wire side of female terminals

Is the resistance as specified?

YES—Go to step 12.

NO—Short in the floor wire harness; replace the floor wire harness.■

12. Check resistance between the No. 25 terminal of SRS unit connector B (28P) and body ground, and between the No. 26 terminal and body ground. There should be an open circuit (ohmmeter reads OL) or at least 1 MΩ.

SRS UNIT CONNECTOR B (28P)

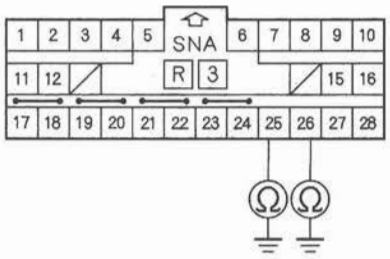

Wire side of female terminals

Is the resistance as specified?

YES—Go to step 13.

NO—Short to ground in the floor wire harness; replace the floor wire harness.■

13. Reconnect the negative cable to the battery.

14. Turn the ignition switch ON (II).

15. Check for voltage between the No. 25 terminal of SRS unit connector B (28P) and body ground, and between the No. 26 terminal and body ground. There should be 1 V or less.

SRS UNIT CONNECTOR B (28P)

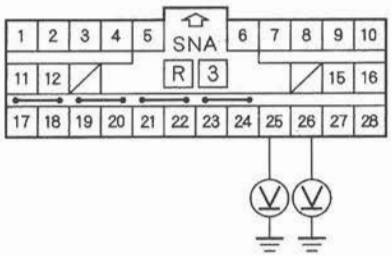

Wire side of female terminals

Is the voltage as specified?

YES—Go to step 16.

NO—Short to power in the floor wire harness; replace the floor wire harness.■

(cont'd)

DTC Troubleshooting (cont'd)

16. Turn the ignition switch OFF.

17. Connect the SRS inflator simulator (jumper connector) and the black lead (A) of simulator lead L to the left side impact sensor 4P connector (B).

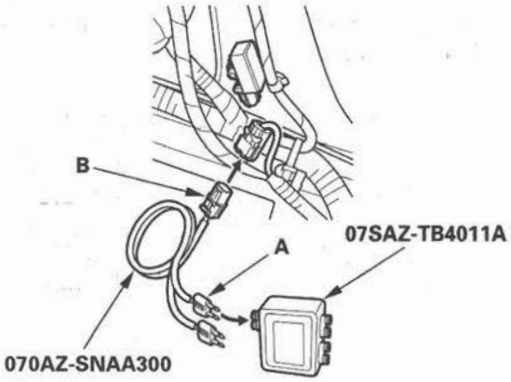

18. Check resistance between the No. 25 and No. 26 terminals of SRS unit connector B (28P). There should be 0—1.0 Ω.

SRS UNIT CONNECTOR B (28P)

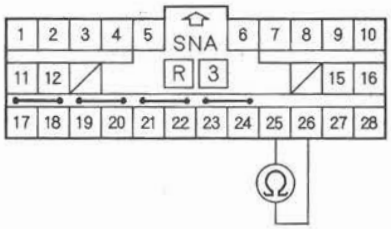

Wire side of female terminals

Is the resistance as specified?

YES—Faulty left side impact sensor (first) or SRS unit; replace the left side impact sensor (first) (see page 24-177). If the problem is still present, replace the SRS unit (see page 24-176).■

NO—Open in the floor wire harness; replace the floor wire harness.■

DTC 44-1x ("x" can be 0 thru 9 or A thru F): No Signal From the Right Side Impact Sensor (first)

Special Tools Required
- SRS inflator simulator 07SAZ-TB4011A
- SRS simulator lead L 070AZ-SNAA300

NOTE: Before doing this troubleshooting procedure, review SRS Precautions and Procedures (see page 24-15).

1. Erase the DTC memory (see page 24-26).

2. Turn the ignition switch ON (II), and wait for 10 seconds.

3. Read the DTC (see page 24-25).

   Is DTC 44-11 indicated?

   YES—Go to step 5.

   NO—Go to step 4.

4. Read the DTC.

   Is DTC 44-12 indicated?

   YES—Faulty right side impact sensor (first); replace the right side impact sensor (first) (see page 24-177).■

   NO—Intermittent failure, the system is OK at this time. Go to Troubleshooting Intermittent Failures (see page 24-27). If DTC 44-1x except DTC 44-11 and 44-12 is indicated, faulty right side impact sensor (first). Replace the right side impact sensor (first) (see page 24-177).■

5. Turn the ignition switch OFF.

6. Disconnect the negative cable from the battery, and wait for 3 minutes.

7. Disconnect both seat belt tensioner connectors (see step 7 on page 24-24) and both seat belt buckle tensioner connectors (see step 8 on page 24-24).

8. Disconnect the floor wire harness 4P connector (A) from the right side impact sensor (first).

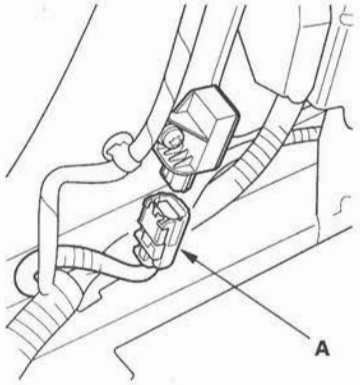

9. Disconnect SRS unit connector B (28P) from the SRS unit (see step 9 on page 24-24).

10. Check resistance between the No. 27 and No. 28 terminals of SRS unit connector B (28P). There should be an open circuit (ohmmeter reads OL) or at least 1 MΩ.

SRS UNIT CONNECTOR B (28P)

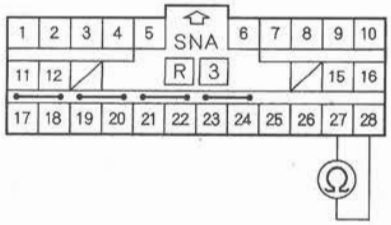

Wire side of female terminals

Is the resistance as specified?

YES—Go to step 11.

NO—Short in the floor wire harness; replace the floor wire harness. ■

11. Check resistance between the No. 28 terminal of SRS unit connector B (28P) and body ground, and between the No. 27 terminal and body ground. There should be an open circuit (ohmmeter reads OL) or at least 1 MΩ.

SRS UNIT CONNECTOR B (28P)

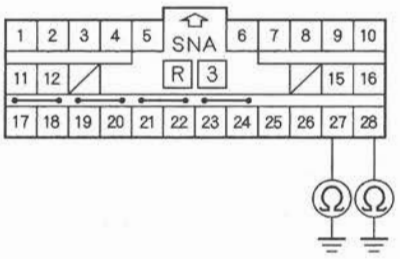

Wire side of female terminals

Is the resistance as specified?

YES—Go to step 12.

NO—Short to ground in the floor wire harness; replace the floor wire harness. ■

(cont'd)

DTC Troubleshooting (cont'd)

12. Reconnect the negative cable to the battery.

13. Turn the ignition switch ON (II).

14. Check for voltage between the No. 28 terminal of SRS unit connector B (28P) and body ground, and between the No. 27 terminal and body ground. There should be 1 V or less.

SRS UNIT CONNECTOR B (28P)

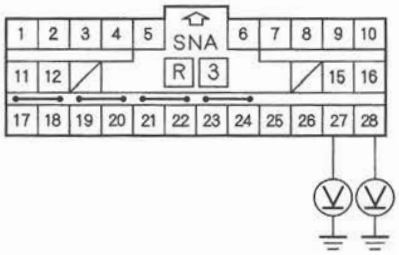

Wire side of female terminals

Is the voltage as specified?

YES—Go to step 15.

NO—Short to power in the floor wire harness; replace the floor wire harness. ■

15. Turn the ignition switch OFF.

16. Connect the SRS inflator simulator (jumper connector) and the black lead (A) of simulator lead L to the right side impact sensor 4P connector (B).

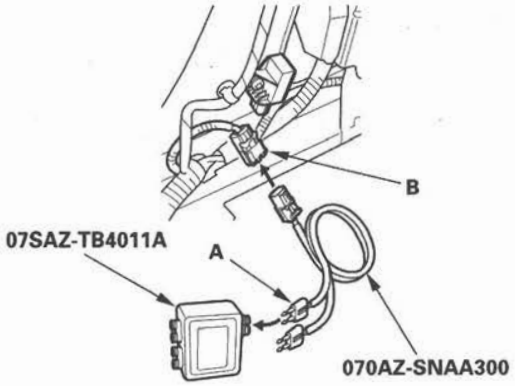

17. Check resistance between the No. 27 and No. 28 terminals of SRS unit connector B (28P). There should be 0—1.0 Ω.

SRS UNIT CONNECTOR B (28P)

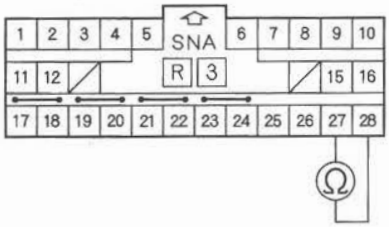

Wire side of female terminals

Is the resistance as specified?

YES—Faulty right side impact sensor (first) or SRS unit; replace the right side impact sensor (first) (see page 24-177). If the problem is still present, replace the SRS unit (see page 24-176). ■

NO—Open in the floor wire harness; replace the floor wire harness. ■

DTC 43-2x 43-8x, 43-Bx ("x" can be 0 thru 9 or A thru F): Internal Failure of the Left Side Impact Sensor (first)

DTC 44-2x, 44-8x, 44-Bx Internal Failure of Right Side Impact Senor (first)

NOTE: Before doing this troubleshooting procedure, review SRS Precautions and Procedures (see page 24-15).

1. Erase the DTC memory (see page 24-26).

2. Turn the ignition switch ON (II), and check that the SRS indicator comes on for about 6 seconds and then goes off.

   Does the SRS indicator stay on, and is DTC 43-2x, 43-3x, 43-Bx 44-8x or 44-Bx indicated?

   YES—Replace the left or right side impact sensor (first) (see page 24-177). If the DTC returns, replace the SRS unit (see page 24-176).■

   NO—Intermittent failure, system is OK at this time. Go to Troubleshooting Intermittent Failures (see page 24-27). If another DTC is indicated, go to the DTC Troubleshooting Index.

DTC Troubleshooting (cont'd)

DTC 45-1x ("x" can be 0 thru 9 or A thru F): No Signal From the Left Side Impact Sensor (second)

Special Tools Required
- SRS inflator simulator 07SAZ-TB4011A
- SRS simulator lead L 070AZ-SNAA300

NOTE: Before doing this troubleshooting procedure, review SRS Precautions and Procedures (see page 24-15).

1. Erase the DTC memory (see page 24-26).
2. Turn the ignition switch ON (II), and wait for 10 seconds.
3. Read the DTC (see page 24-25).

   Is DTC 45-11 indicated?

   YES—Go to step 4.

   NO—Intermittent failure, system is OK at this time. Go to Troubleshooting Intermittent Failures (see page 24-27). If another DTC is indicated, go to the DTC Troubleshooting Index.
4. Read the DTC.

   Is DTC 43-11 also indicated?

   YES—Faulty left side impact sensor (second); replace the left side impact sensor (second) (see page 24-178).■

   NO—Go to step 5.
5. Turn the ignition switch OFF.
6. Disconnect the negative cable from the battery, and wait for 3 minutes.
7. Disconnect side wire harness 2P connector (A) from the left side impact sensor (second) (see page 24-178).

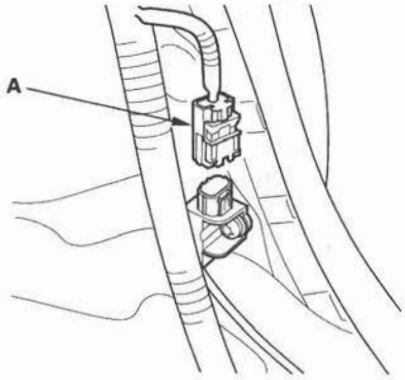

8. Disconnect the floor wire harness 4P connector (A) from the left side impact sensor (first) (see page 24-177).

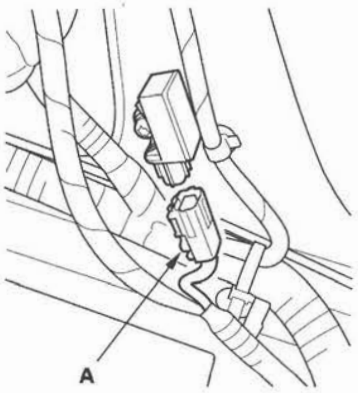

9. Check resistance between the No. 1 and No. 2 terminals of left side impact sensor (second) 2P connector. There should be an open circuit (ohmmeter reads OL) or at least 1 MΩ.

LEFT SIDE IMPACT SENSOR (SECOND) 2P CONNECTOR

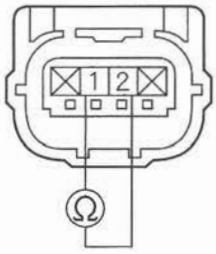

Terminal side of female terminals

Is the resistance as specified?

YES—Go to step 10.

NO—Short in the side wire harness or floor wire harness; replace the faulty harness.■

10. Check resistance between the No. 1 terminal of left side impact sensor (second) 2P connector and body ground, and between the No. 2 terminal and body ground. There should be an open circuit (ohmmeter reads OL) or at least 1 MΩ.

LEFT SIDE IMPACT SENSOR (SECOND) 2P CONNECTOR

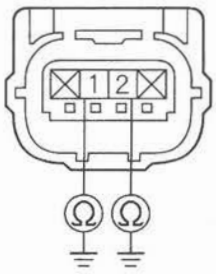

Terminal side of female terminals

Is the resistance as specified?

YES—Go to step 11.

NO—Short to ground in the side wire harness or floor wire harness; replace the faulty harness.■

11. Reconnect the negative cable to the battery.

12. Turn the ignition switch ON (II).

13. Check for voltage between the No. 1 terminal of left side impact sensor (second) 2P connector and body ground, and between the No. 2 terminal and body ground. There should be 1 V or less.

LEFT SIDE IMPACT SENSOR (SECOND) 2P CONNECTOR

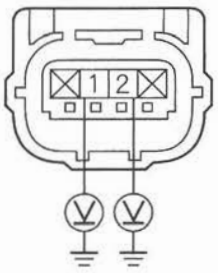

Terminal side of female terminals

Is the voltage as specified?

YES—Go to step 14.

NO—Short to power in the side wire harness or floor wire harness; replace the faulty harness.■

14. Turn the ignition switch OFF.

15. Connect the SRS inflator simulator (jumper connector) and the red lead (A) of simulator lead L to the left side impact sensor (first) 4P connector (B).

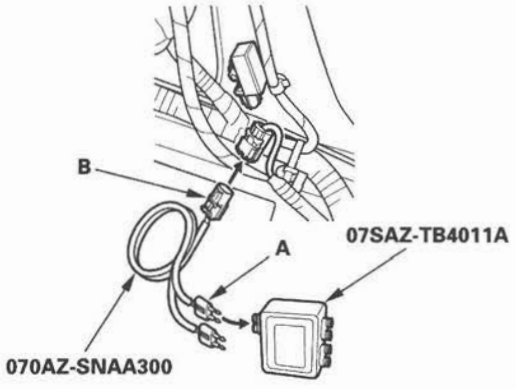

(cont'd)

DTC Troubleshooting (cont'd)

16. Check resistance between the No. 1 and No. 2 terminals of left side impact sensor (second) 2P connector. There should be 0—1.0 Ω.

LEFT SIDE IMPACT SENSOR (SECOND) 2P CONNECTOR

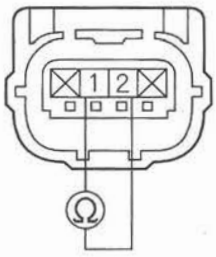

Terminal side of female terminals

Is the resistance as specified?

YES—Faulty left side impact sensor (second) or poor connection at left side impact sensor (second) 2P connector. Check the connection; If the connection is OK, replace the left side impact sensor (second) (see page 24-178).■

NO—Open in the side wire harness or floor wire harness; replace the faulty harness.■

DTC 46-1x ("x" can be 0 thru 9 or A thru F): No Signal From the Right Side Impact Sensor (second)

Special Tools Required
- SRS inflator simulator 07SAZ-TB4011A
- SRS simulator lead L 070AZ-SNAA300

NOTE: Before doing this troubleshooting procedure, review SRS Precautions and Procedures (see page 24-15).

1. Erase the DTC memory (see page 24-26).
2. Turn the ignition switch ON (II), and wait for 10 seconds.
3. Read the DTC (see page 24-25).

   Is DTC 46-11 indicated?

   YES—Go to step 5.

   NO—Go to step 4.
4. Read the DTC.

   Is DTC 46-12 also indicated?

   YES—Faulty right side impact sensor (second); replace the right side impact sensor (second) (see page 24-178).■

   NO—Intermittent failure, system is OK at this time. Go to Troubleshooting Intermittent Failures (see page 24-27). If another DTC is indicated, go to the DTC Troubleshooting Index.
5. Turn the ignition switch OFF.
6. Disconnect the negative cable from the battery, and wait for 3 minutes.

7. Disconnect the side wire harness 2P connector (A) from the right side impact sensor (second) (see page 24-178).

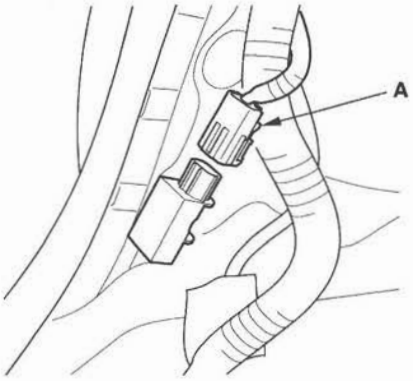

8. Disconnect the floor wire harness 4P connector (A) from the right side impact sensor (first) (see page 24-177).

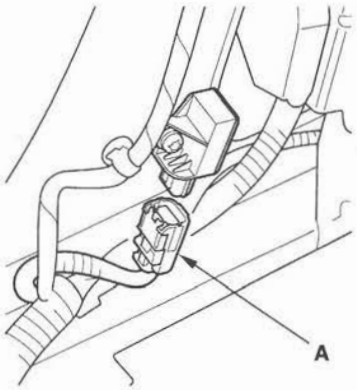

9. Check resistance between the No. 1 and No. 2 terminals of right side impact sensor (second) 2P connector. There should be an open circuit (ohmmeter reads OL) or at least 1 MΩ.

RIGHT SIDE IMPACT SENSOR (SECOND) 2P CONNECTOR

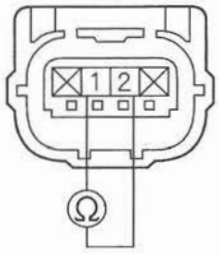

Terminal side of female terminals

Is the resistance as specified?

YES—Go to step 10.

NO—Short in the side wire harness or floor wire harness; replace the faulty harness.■

10. Check resistance between the No. 1 terminal of right side impact sensor (second) 2P connector and body ground, and between the No. 2 terminal and body ground. There should be an open circuit or at least 1 MΩ.

RIGHT SIDE IMPACT SENSOR (SECOND) 2P CONNECTOR

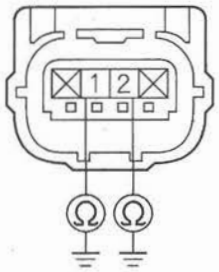

Terminal side of female terminals

Is the resistance as specified?

YES—Go to step 11.

NO—Short to ground in the side wire harness or floor wire harness; replace the faulty harness.■

(cont'd)

DTC Troubleshooting (cont'd)

11. Reconnect the negative cable to the battery.

12. Turn the ignition switch ON (II).

13. Check for voltage between the No. 1 terminal of right side impact sensor (second) 2P connector and body ground, and between the No. 2 terminal and body ground. There should be 1 V or less.

RIGHT SIDE IMPACT SENSOR (SECOND) 2P CONNECTOR

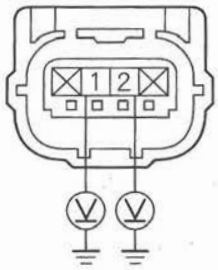

Terminal side of female terminals

Is the voltage as specified?

YES—Go to step 14.

NO—Short to power in the side wire harness or floor wire harness; replace the faulty harness.■

14. Turn the ignition switch OFF.

15. Connect the SRS inflator simulator (jumper connector) and the red lead (A) of simulator lead L to the right side impact sensor (first) 4P connector (B).

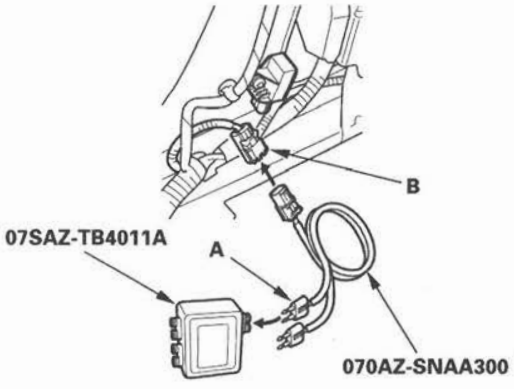

16. Check resistance between the No. 1 and No. 2 terminals of right side impact sensor (second) 2P connector. There should be 0—1.0 Ω.

RIGHT SIDE IMPACT SENSOR (SECOND) 2P CONNECTOR

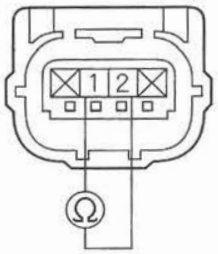

Terminal side of female terminals

Is the resistance as specified?

YES—Faulty right side impact sensor (second) or poor connection at right side impact sensor (second) 2P connector. Check the connection; If the connection is OK, replace the right side impact sensor (second) (see page 24-178).■

NO—Open in the side wire harness or floor wire harness; replace the faulty harness.■

DTC 45-2x, 45-8x, 45-Bx ("x" can be 0 thru 9 or A thru F): Internal Failure of the Left Side Impact Sensor (second)

DTC 46-2x, 46-8x, 46-Bx ("x" can be 0 thru 9 or A thru F): Intemal Failure of Right Side Impact Sensor (second)

NOTE: Before doing this troubleshooting procedure, review SRS Precautions and Procedures (see page 24-15).

1. Erase the DTC memory (see page 24-26).
2. Turn the ignition switch ON (II), and check that the SRS indicator comes on for about 6 seconds and then goes off.

   Does the SRS indicator stay on, and is DTC 45-2x, 45-8x, 45-Bx, 46-2x, 46-8x, or 46-Bx indicated?

   YES—Replace the left or right side impact sensor (second) (see page 24-178). If the DTC returns, replace the SRS unit (see page 24-176).■

   NO—Intermittent failure, system is OK at this time. Go to Troubleshooting Intermittent Failures (see page 24-27). If another DTC is indicated, go to the DTC Troubleshooting Index.

DTC 51-xx, 52-xx, 53-xx, 54-xx, 55-xx, 57-xx, 58-xx ("x" can be 0 thru 9 or A thru F): Internal Failure of the SRS Unit

NOTE:
- Before troubleshooting any of these DTCs, check the battery/system voltage and battery cable connections. If the voltage is low, repair the charging system or replace the battery before troubleshooting the SRS. If the battery/system voltage is now OK, ask the customer if the battery ever went dead or if the engine was started and run with the battery in a low state of change. A dead battery may trigger one or more of these DTCs.
- Before doing this troubleshooting procedure, review SRS Precautions and Procedures (see page 24-15).

1. Erase the DTC memory (see page 24-26).
2. Turn the ignition switch ON (II), and check that the SRS indicator comes on for about 6 seconds and then goes off.

   Does the SRS indicator stay on, and is DTC 51-xx, 52-xx, 53-xx, 54-xx, 55-xx, 57-xx, or 58-xx indicated?

   YES—Replace the SRS unit (see page 24-176).■

   NO—Intermittent failure, the system is OK at this time. Go to Troubleshooting Intermittent Failures (see page 24-27). If another DTC is indicated, go to the DTC Troubleshooting Index.

DTC Troubleshooting (cont'd)

DTC E2-11, E4-11, F1-11, F2-11, F3-11, F4-11: Airbags, Side Airbags, Side Curtain Airbags, Seat Belt Tensioners and/or Seat Belt Buckle Tensioners Deployed

The SRS unit must be replaced after any airbags and/or tensioners have deployed (see page 24-158). ■

NOTE:

- DTC E2-11 is set if the system triggered airbag deployment but the front passenger's airbag was prevented from deploying because of the seat weight sensor.
- DTC E4-11 is set if the system triggered a passenger's side airbag deployment but the airbag was prevented from deploying by the ODS. Replace the right side impact sensor (first) (see page 24-177).
- Before doing this troubleshooting procedure, review SRS Precautions and Procedures (see page 24-15).

DTC 56-11: Lost Communication with the PCM (engine message)

DTC 56-21: Lost Communication with the PCM (A/T message)

NOTE:
- Before doing this troubleshooting procedure, review SRS Precautions and Procedures (see page 24-15).
- Check for any F-CAN and B-CAN communication DTCs, and troubleshoot those DTCs before doing this troubleshooting procedure.

1. Turn the ignition switch ON (II), and see if the malfunction indicator lamp (MIL) or D indicator come on.

   Does the MIL or D indicator come on?

   YES—Go to step 2.

   NO—Go to the PGM-FI System MIL circuit troubleshooting (see page 11-196)or A/T system General Troubleshooting Information (see page 14-4).

2. Erase the DTC memory (see page 24-26).

3. Turn the ignition switch ON (II), and wait for 10 seconds.

4. Read the DTC (see page 24-25).

   Is DTC 56-11 or 56-21 indicated?

   YES—Go to step 5.

   NO—Intermittent failure, the system is OK at this time. Go to Troubleshooting Intermittent Failures (see page 24-27). If another DTC is indicated, go to the DTC Troubleshooting Index.

5. Turn the ignition switch OFF.

6. Disconnect the negative cable from the battery, and wait for 3 minutes.

7. Disconnect SRS unit connector A (28P) from the SRS unit (see step 9 on page 24-24).

8. Disconnect PCM connector E (44P) from the PCM (see page 11-6).

9. Install a jumper wire between the No. 11 and No. 12 terminals of SRS unit connector A (28P).

SRS UNIT CONNECTOR A (28P)

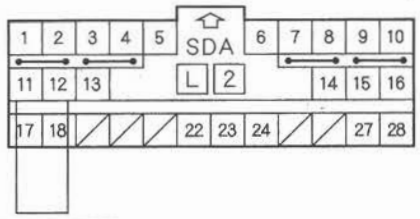

JUMPER WIRE

Wire side of female terminals

10. Check resistance between the No. 36 and No. 37 terminals of PCM connector E (44P). There should be 0—1.0 Ω.

PCM CONNECTOR E (44P)

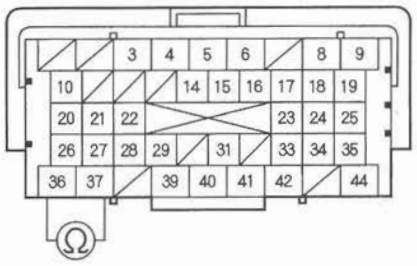

Wire side of female terminals

Is the resistance as specified?

YES—Faulty SRS unit or poor connection at SRS unit connector A (28P) and the SRS unit. Check the connection between the connector and the SRS unit. If the connection is OK, replace the SRS unit (see page 24-176).

NO—Open between the No. 11 terminal of SRS unit connector A (28P) and No. 36 terminal of PCM connector E (44P), or between the No. 12 terminal of SRS unit connector A (28P) and No. 37 terminal of PCM connector E (44P); replace the faulty harness. ■

DTC Troubleshooting (cont'd)

DTC 56-12, 56-13: Undefined Data Received From the PCM (engine message)

DTC 56-22, 56-23: Undefined Data Received From the PCM (A/T message)

NOTE:
- Before doing this troubleshooting procedure, review SRS Precautions and Procedures (see page 24-15).
- Check for any F-CAN and B-CAN communication DTCs, and troubleshoot those DTCs before doing this troubleshooting procedure.

1. Turn the ignition switch ON (II), and see if the malfunction indicator lamp (MIL) or D indicator come on.

   Does the MIL or D indicator come on?

   YES—Go to step 2.

   NO—Go to the PGM-FI System MIL circuit troubleshooting (see page 11-196) or A/T system General Troubleshooting Information (see page 14-4).

2. Erase the DTC memory (see page 24-26).

3. Turn the ignition switch ON (II), and wait for 10 seconds.

4. Read the DTC (see page 24-25).

   Is DTC 56-12, 56-13, 56-22 or 56-23 indicated?

   YES—Faulty PCM; replace the PCM (see page 11-219).

   NO—Intermittent failure, the system is OK at this time. Go to Troubleshooting Intermittent Failures (see page 24-27). If another DTC is indicated, go to the DTC Troubleshooting Index.

DTC 56-25: Lost communication with the Gauge Control Module

NOTE:
- Before doing this troubleshooting procedure, review SRS Precautions and Procedures (see page 24-15).
- Check for any F-CAN and B-CAN communication DTCs, and troubleshoot those DTCs before doing this troubleshooting procedure.

1. Release the parking brake, turn the ignition switch ON (II), and see if the brake system light comes on for 2 seconds and then goes off.

   Does the brake system light come on?

   YES—Go to step 2.

   NO—Faulty gauge control module. Do the gauge contorl module self-diagnostic function (see page 22-229).

2. Erase the DTC memory (see page 24-26).

3. Turn the ignition switch ON (II), and wait for 10 seconds.

4. Read the DTC (see page 24-25).

   Is DTC 56-25 indicated?

   YES—Go to step 5.

   NO—Intermittent failure, the system is OK at this time. Go to Troubleshooting Intermittent Failures (see page 24-27). If another DTC is indicated, go to the DTC Troubleshooting Index.

5. Turn the ignition switch OFF.

6. Disconnect the negative cable from the battery, and wait for 3 minutes.

7. Disconnect SRS unit connector A (28P) from the SRS unit (see step 9 on page 24-24).

8. Disconnect gauge control module connector A (36P) from the gauge control module (see page 22-248).

9. Install a jumper wire between the No. 11 and No. 12 terminals of SRS unit connector A (28P).

SRS UNIT CONNECTOR A (28P)

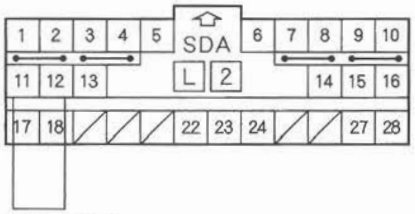

JUMPER WIRE

Wire side of female terminals

10. Check resistance between the No. 33 and No. 34 terminals of gauge control module connector A (36P). There should be 0—1.0 Ω.

GAUGE CONTROL MODULE CONNECTOR A (36P)

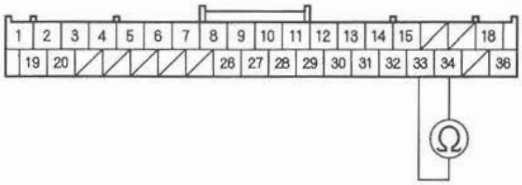

Wire side of female terminals

Is the resistance as specified?

YES—Faulty SRS unit or poor connection at SRS unit connector A (28P) and the SRS unit. Check the connection between the connector and the SRS unit. If the connection is OK, replace the SRS unit (see page 24-176).

NO—Open between the No. 11 terminal of SRS unit connector A (28P) and No. 34 terminal of gauge control module connector A (36P), and between the No. 12 terminal of SRS unit connector A (28P) and No. 33 terminal of gauge control module connector A (36P); replace the faulty harness. ■

DTC 56-26, 56-27: Undefined Data Received From the Gauge Control Module

NOTE:
- Before doing this troubleshooting procedure, review SRS Precautions and Procedures (see page 24-15).
- Check for any F-CAN and B-CAN communication DTCs, and troubleshoot those DTCs before doing this troubleshooting procedure.

1. Erase the DTC memory (see page 24-26).

2. Turn the ignition switch ON (II), and wait for 10 seconds.

3. Read the DTC (see page 24-25).

   Is DTC 56-26 or 56-27 indicated?

   YES—Faulty gauge control module; replace the gauge control module (see page 22-248). ■

   NO—Intermittent failure, the system is OK at this time. Go to Troubleshooting Intermittent Failures (see page 24-27). If another DTC is indicated, go to the DTC Troubleshooting Index.

DTC Troubleshooting (cont'd)

DTC 61-1x ("x" can be 0 thru 9 or A thru F): Open in the Driver's Seat Belt Buckle Switch

NOTE: Before doing this troubleshooting procedure, review SRS Precautions and Procedures (see page 24-15).

1. Erase the DTC memory (see page 24-26).
2. Turn the ignition switch ON (II), then buckle and unbuckle the driver's seat belt several times.
3. Read the DTC (see page 24-25).

   Is DTC 61-1x indicated?

   YES—Go to step 4.

   NO—Intermittent failure, the system is OK at this time. Go to Troubleshooting Intermittent Failures (see page 24-27). If another DTC is indicated, go to the DTC Troubleshooting Index.
4. Disconnect the floor wire harness 3P connector from the driver's seat belt buckle switch 3P connector (A).

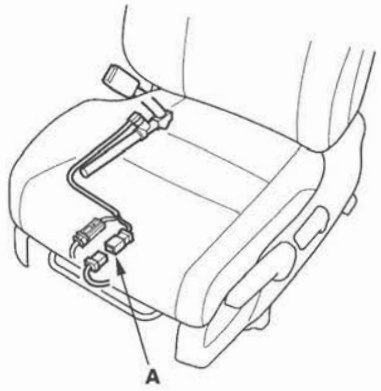

5. From the system selection menu on the HDS, select SRS, then select SRS again, then select PARAMETER INFORMATION, then Buckles Switch. Seat Position Sensor, and check the status on the HDS screen for FRONT LEFT SEAT BELT BUCKLE SWITCH when the seat belt is buckled, and unbuckled.

   - If UNBUCKLE, BUCKLE, or SHORT is indicated replace the floor wire harness.
   - If OPEN is indicated, go to step 6.
6. Check resistance between the No. 1 terminal of the floor wire harness 3P connector and body ground. There should be 0—1 Ω.

FLOOR WIRE HARNESS 3P CONNECTOR

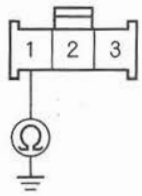

Wire side of female terminals

Is the resistance as specified?

YES—Go to step 7.

NO—Open in the floor wire harness or poor ground connection at G551 (see page 22-34).

7. Alternately connect the No. 2 and No. 3 terminals of the floor wire harness 3P connector to body ground with a jumper wire, and check the status on the HDS screen.

   Does the status alternate from UNBUCKLE to BUCKLE?

   YES—Replace the driver's seat belt buckle assembly (see page 24-6), then clear the DTC. ■

   NO—Open in the floor wire harness; replace the floor wire harness. ■

DTC 61-2x ("x" can be 0 thru 9 or A thru F): Short in Driver's Seat Belt Buckle Switch

NOTE: Before doing this troubleshooting procedure, review SRS Precautions and Procedures (see page 24-15).

1. Erase the DTC memory (see page 24-26).
2. Turn the ignition switch ON (II), then buckle and unbuckle the driver's seat belt several times.
3. Read the DTC (see page 24-25).

   Is DTC 61-2x indicated?

   YES—Go to step 4.

   NO—Intermittent failure, the system is OK at this time. Go to Troubleshooting Intermittent Failures (see page 24-27). If another DTC is indicated, go to the DTC Troubleshooting Index.
4. Turn the ignition switch OFF.
5. Disconnect the floor wire harness 3P connector from the driver's seat belt buckle switch 3P connector (A).

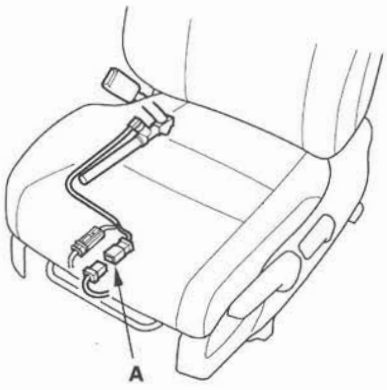

6. Turn the ignition switch ON (II).
7. From the system selection menu on the HDS, select SRS, then select SRS again, then select PARAMETER INFORMATION, then Buckle Switch, Seat Position Sensor, and check the status on the HDS screen for FRONT LEFT SEAT BELT BUCKLE SWITCH.

   Is OPEN indicated on the HDS?

   YES—Replace the driver's seat belt buckle assembly (see page 24-6), then clear the DTC. ■

   NO—Short to ground in the floor wire harness; replace the floor wire harness. ■

DTC Troubleshooting (cont'd)

DTC 62-1x ("x" can be 0 thru 9 or A thru F): Open in the Front Passenger's Seat Belt Buckle Switch

NOTE: Before doing this troubleshooting procedure, review SRS Precautions and Procedures (see page 24-15).

1. Erase the DTC memory (see page 24-26).
2. Turn the ignition switch ON (II), then buckle and unbuckle the driver's seat belt several times.
3. Read the DTC (see page 24-25),

   Is DTC 62-1x indicated?

   YES—Go to step 4.

   NO—Intermittent failure, the system is OK at this time. Go to Troubleshooting Intermittent Failures (see page 24-27). If another DTC is indicated, go to the DTC Troubleshooting Index.
4. Disconnect the front passenger's seat subharness 3P connector from the front passenger's seat belt buckle switch 3P connector (A).



5. From the system selection menu on the HDS, select SRS, then select SRS again, then select PARAMETER INFORMATION, then Buckle Switch. Seat Position Sensor, and check the status on the HDS screen for FRONT RIGHT SEAT BELT BUCKLE SWITCH when the seat belt is buckled, and unbuckled.

   - If UNBUCKLE, BUCKLE, or SHORT is indicated open in the front passenger's seat subharness, or floor wire harness; replace the faulty harness.
   - If OPEN is indicated, go to step 6.
6. Check resistance between the No. 1 terminal of the front passenger's seat subharness 3P connector and body ground. There should be 0—1 Ω.

FRONT PASSENGER'S SEAT SUBHARNESS 3P CONNECTOR

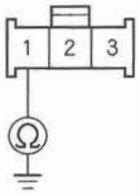

Wire side of female terminals

Is the resistance as specified?

YES—Go to step 7.

NO—Open in the front passenger's seat subharness, or floor wire harness or poor ground connection at G552 (see page 22-34). If G552 is OK, replace the faulty harness. ■

7. Alternately connect the No. 2 and No. 3 terminals of the front passenger's seat subharness 3P connector to body ground with a jumper wire, and check the status on the HDS screen.

   Does the status alternate from UNBUCKLE to BUCKLE?

   YES—Replace the front passenger's seat belt buckle assembly (see page 24-6), then clear the DTC. ■

   NO—Open in the front passenger's seat subharness, or floor wire harness; replace the faulty harness. ■

DTC 62-2x ("x" can be 0 thru 9 or A thru F): Short in Front Passenger's Seat Belt Buckle Switch

NOTE: Before doing this troubleshooting procedure, review SRS Precautions and Procedures (see page 24-15).

1. Erase the DTC memory (see page 24-26).
2. Turn the ignition switch ON (II), then buckle and unbuckle the front passenger's seat belt several times.
3. Read the DTC (see page 24-25).

   Is DTC 62-2x indicated?

   YES—Go to step 4.

   NO—Intermittent failure, the system is OK at this time. Go to Troubleshooting Intermittent Failures (see page 24-27). If another DTC is indicated, go to the DTC Troubleshooting Index.
4. Turn the ignition switch OFF.
5. Disconnect the front passenger's seat wire harness 3P connector from the front passenger's seat belt buckle switch 3P connector (A).



6. Turn the ignition switch ON (II).
7. From the system selection menu on the HDS, select SRS, then select SRS again, then select PARAMETER INFORMATION, then Buckle Switch, Seat Position Sensor, and check the status on the HDS screen for FRONT RIGHT SEAT BELT BUCKLE SWITCH.

   Is OPEN indicated on the HDS?

   YES—Replace the front passenger's seat belt buckle assembly (see page 24-6), then clear the DTC. ■

   NO—Short to ground in the front passenger's seat wire harness, front passenger's seat subharness, or floor wire harness; replace the faulty harness. ■

DTC Troubleshooting (cont'd)

DTC 71-1x ("x" can be 0 thru 9 or A thru F): Open in Driver's Seat Position Sensor

NOTE: Before doing this troubleshooting procedure, review SRS Precautions and Procedures (see page 24-15).

1. Erase the DTC memory (see page 24-26).
2. Turn the ignition switch ON (II), and check that the SRS indicator comes on for about 6 seconds and then goes off.

   Does the SRS indicator stay on, and is DTC 71-1x indicated?

   YES—Go to step 3.

   NO—Intermittent failure, the system is OK at this time. Go to Troubleshooting Intermittent Failures (see page 24-27). If another DTC is indicated, go to the DTC Troubleshooting Index.
3. Check the connection between the seat position sensor harness 2P connector and the driver's seat position sensor (see page 24-13).
4. Erase the DTC memory.
5. Read the DTC (see page 24-25).

   Is DTC 71-1x indicated?

   YES—Go to step 6.

   NO—Intermittent failure, the system is OK at this time. Go to Troubleshooting Intermittent Failures (see page 24-27). If another DTC is indicated, go to the DTC Troubleshooting Index.
6. Turn the ignition switch OFF. Disconnect the negative cable from the battery, and wait for 3 minutes.
7. Disconnect the seat position sensor harness 2P connector from the driver's seat position sensor (A).

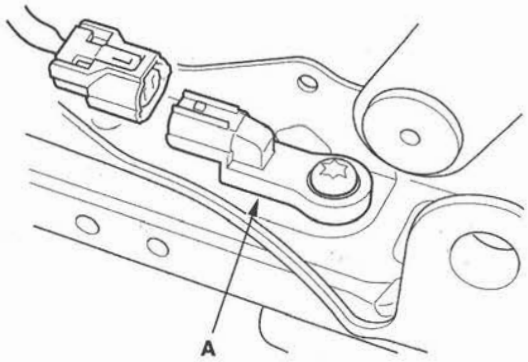

8. Connect the No. 1 and No. 2 terminals of the seat position sensor harness 2P connector with a jumper wire.

SEAT POSITION SENSOR HARNESS 2P CONNECTOR



Wire side of female terminals

9. Disconnect both seat belt tensioner connectors (see step 7 on page 24-24) and both seat belt buckle tensioner connectors (see step 8 on page 24-24).

10. Disconnect SRS unit connector B (28P) from the SRS unit (see step 9 on page 24-24).

11. Check resistance between the No. 5 and No. 6 terminals of SRS unit connector B (28P). There should be 0—1.0 Ω.

SRS UNIT CONNECTOR B (28P)

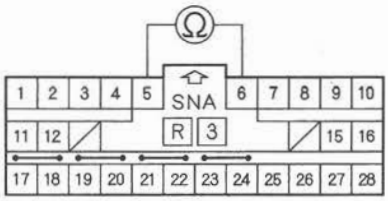

Wire side of female terminals

Is the resistance as specified?

YES—Faulty driver's seat position sensor or SRS unit; replace the driver's seat position sensor (see page 24-183). If the problem is still present, replace the SRS unit (see page 24-176). ■

NO—Open in the floor wire harness, driver's seat wire harness, or the seat position sensor harness; replace the faulty harness. ■

DTC 71-2x ("x" can be 0 thru 9 or A thru F): Short in Driver's Seat Position Sensor

NOTE: Before doing this troubleshooting procedure, review SRS Precautions and Procedures (see page 24-15).

1. Erase the DTC memory (see page 24-26).

2. Turn the ignition switch ON (II), and check that the SRS indicator comes on for about 6 seconds and then goes off.

   Does the SRS indicator stay on, and is DTC 71-2x indicated?

   YES—Go to step 3.

   NO—Intermittent failure, the system is OK at this time. Go to Troubleshooting Intermittent Failures (see page 24-27). If another DTC is indicated, go to the DTC Troubleshooting Index.

3. Turn the ignition switch OFF. Disconnect the negative cable from the battery, and wait for 3 minutes.

(cont'd)

DTC Troubleshooting (cont'd)

4. Disconnect the seat position sensor harness 2P connector from the driver's seat position sensor (A) (see page 24-13).

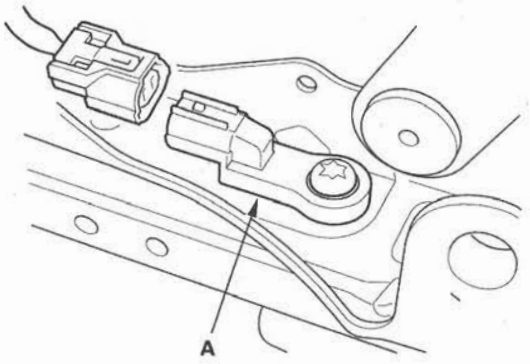

5. Reconnect the negative cable to the battery.
6. Erase the DTC memory.
7. Read the DTC (see page 24-25).

   Is DTC 71-2x indicated?

   YES—Go to step 8.

   NO—Faulty driver's seat position sensor; replace the driver's seat position sensor (see page 24-183). ■

8. Turn the ignition switch OFF. Disconnect the negative cable from the battery, and wait for 3 minutes.
9. Disconnect both seat belt tensioner connectors (see step 7 on page 24-24) and both seat belt buckle tensioner connectors (see step 8 on page 24-24).
10. Disconnect SRS unit connector B (28P) from the SRS unit (see step 9 on page 24-24).
11. Check resistance between the No. 5 and No. 6 terminals of SRS unit connector B (28P). There should be an open circuit (ohmmeter reads OL) or at least 1 MΩ.

SRS UNIT CONNECTOR B (28P)

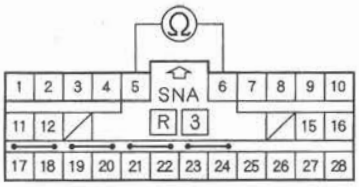

Wire side of female terminals

Is the resistance as specified?

YES—Go to step 12.

NO—Short in the floor wire harness, driver's seat wire harness, or the seat position sensor harness; replace the faulty harness. ■

12. Check resistance between the No. 5 terminal of SRS unit connector B (28P) and body ground, and between the No. 6 terminal and body ground. There should be an open circuit (ohmmeter reads OL) or at least 1 MΩ.

SRS UNIT CONNECTOR B (28P)

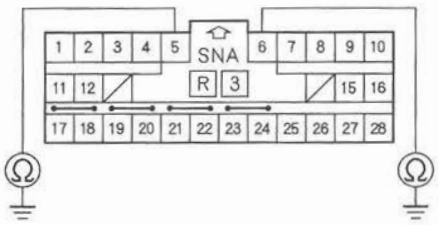

Wire side of female terminals

Is the resistance as specified?

YES—Faulty driver's seat position sensor or the SRS unit; replace the driver's seat position sensor (see page 24-183). If the problem is still present, replace the SRS unit (see page 24-176). ■

NO—Short in the floor wire harness, driver's seat wire harness, or the seat position sensor harness; replace the faulty harness. ■

DTC 81-61, 85-61: No Signal From ODS Unit

DTC 81-62, 85-62: Non-Stipulated Response Data

NOTE: Before doing this troubleshooting procedure, review SRS Precautions and Procedures (see page 24-15).

1. Make sure nothing is on the front passenger's seat.
2. Erase the DTC memory (see page 24-26).
3. Read the DTC (see page 24-25).

   Is DTC 81-61, 85-61, 81-62, or 85-62 indicated?

   YES—Go to step 4.

   NO—Intermittent failure, the system is OK at this time. Go to Troubleshooting Intermittent Failures (see page 24-27). If another DTC is indicated, go to the DTC Troubleshooting Index.

4. Check the connection between the ODS unit harness 18P connector and the ODS unit (see step 4 on page 24-181).

   Is the connection OK?

   YES—Go to step 6.

   NO—Repair the poor connection and retest. If DTC 85-61 or 85-62 is still present, go to step 5.

5. Turn the ignition switch OFF.
6. Check the No. 9 (7.5 A) fuse in the under-dash fuse/relay box.

   Is the fuse OK?

   YES—Go to step 7.

   NO—Replace the fuse, then turn the ignition switch ON (II). If the fuse blows again, check for a short in the No. 9 (7.5 A) fuse circuit (dashboard wire harness, floor wire harness, front passenger's seat subharness, or ODS unit harness). ■

7. Disconnect the ODS unit harness 18P connector (A) from the ODS unit.



8. Turn the ignition switch ON (II).
9. Check for voltage between the No. 1 terminal of the ODS unit harness 18P connector and body ground. There should be battery voltage.

ODS UNIT HARNESS 18P CONNECTOR

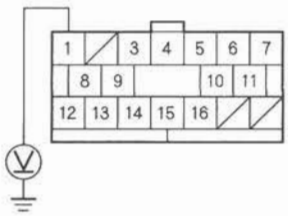

Wire side of female terminals

Is there battery voltage?

YES—Go to step 10.

NO—Open in the dashboard wire harness, floor wire harness, front passenger's seat subharness, or ODS unit harness; replace the faulty harness. ■

(cont'd)

DTC Troubleshooting (cont'd)

10. Turn the ignition switch OFF.

11. Check resistance between the No. 12 terminal of ODS unit harness 18P connector and body ground. There should be 0—1.0 Ω.

ODS UNIT HARNESS 18P CONNECTOR

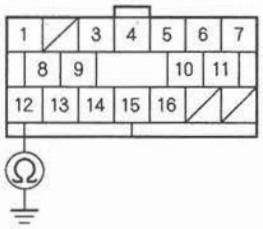

Wire side of female terminals

Is the resistance as specified?

YES—Go to step 12.

NO—Open in the ODS unit harness, front passenger's seat subharness, floor wire harness, or poor ground connection at G552 (see page 22-34). If G552 is OK, replace the faulty harness.■

12. Turn the ignition switch OFF. Disconnect the negative cable from the battery, and wait for 3 minutes.

13. Disconnect SRS unit connector A (28P) from the SRS unit (see step 9 on page 24-24).

14. Check resistance between the No. 14 terminal of SRS unit connector A (28P) and body ground. There should be an open circuit (ohmmeter reads OL) or at least 1 MΩ.

SRS UNIT CONNECTOR A (28P)

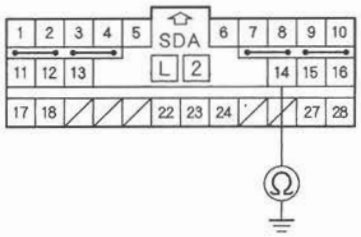

Wire side of female terminals

Is the resistance as specified?

YES—Go to step 15.

NO—Short to ground in the dashboard wire harness, floor wire harness, front passenger's seat subharness, or ODS unit harness; replace the faulty harness.■

15. Turn the ignition switch ON (II), and measure the voltage between the No. 14 terminal of SRS unit connector A (28P) and body ground. There should be 0.5 V or less.

SRS UNIT CONNECTOR A (28P)

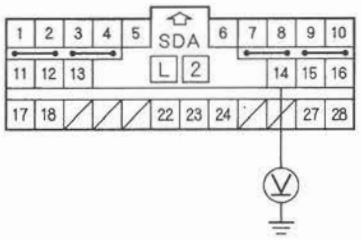

Wire side of female terminals

Is the voltage as specified?

YES—Go to step 16.

NO—Short to power in the dashboard wire harness, floor wire harness, front passenger's seat subharness, or ODS unit harness; replace the faulty harness.■

16. Check resistance between the No. 14 terminal of SRS unit connector A (28P) and the No. 7 terminal of the ODS unit harness 18P connector. There should be 0—1.0 Ω.

ODS UNIT HARNESS 18P CONNECTOR

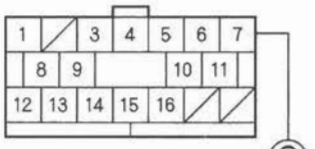

SRS UNIT CONNECTOR A (28P)

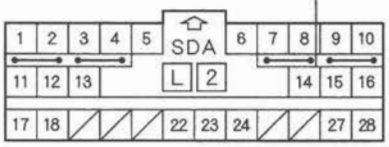

Wire side of female terminals

Is the resistance as specified?

YES—Faulty ODS unit or SRS unit; replace the ODS unit (see page 24-181). If the problem is still present, replace the SRS unit (see page 24-176).■

NO—Open in the dashboard wire harness, floor wire harness, front passenger's seat subharness, or ODS unit harness; replace the faulty harness.■

DTC 81-71, 81-78: ODS Unit Does Not Calibrate

DTC 85-71, 85-78: ODS Unit Does Not Initialize

NOTE: Before doing this troubleshooting procedure, review SRS Precautions and Procedures (see page 24-15).

1. Erase the DTC memory (see page 24-26).
2. Turn the ignition switch ON (II), and check that the SRS indicator comes on for about 6 seconds and then goes off.

   Does the SRS indicator stay on, and is 81-71, 81-78, 85-71, or 85-78 indicated?

   YES—Go to step 3.

   NO—Intermittent failure, the system is OK at this time. Go to Troubleshooting Intermittent Failures (see page 24-27). If another DTC is indicated, go to the DTC Troubleshooting Index.

3. Initialize the ODS unit (see page 24-28) or calibrate the ODS unit (see page 24-29).
4. Turn the ignition switch ON (II), and check that the SRS indicator comes on for about 6 seconds and then goes off.

   Does the SRS indicator go off?

   YES—The system is OK.■

   NO—Replace the ODS unit (see page 24-181).■

DTC Troubleshooting (cont'd)

DTC 81-4x, 81-5x ("x" can be 0 thru 9 or A thru F), 81-63, 81-64: Internal Failure of the ODS Unit

NOTE: Before doing this troubleshooting procedure, review SRS Precautions and Procedures (see page 24-15).

1. Erase the DTC memory (see page 24-26).
2. Turn the ignition switch ON (II), and check that the SRS indicator comes on for about 6 seconds and then goes off.

   Does the SRS indicator stay on, and is DTC 81-4x, 81-5x, 81-63, or 81-64 indicated?

   YES—Replace the ODS unit (see page 24-181). If the DTC returns, replace the SRS unit (see page 24-176).■

   NO—Intermittent failure, the system is OK at this time. Go to Troubleshooting Intermittent Failures (see page 24-27). If another DTC is indicated, go to the DTC Troubleshooting Index.

DTC 81-79: Front Passenger's Weight Sensors Drift Check Failure

NOTE: Before doing this troubleshooting procedure, review SRS Precautions and Procedures (see page 24-15).

1. Erase the DTC memory (see page 24-26).
2. Turn the ignition switch ON (II), and check that the SRS indicator comes on for about 6 seconds and then goes off.

   Does the SRS indicator stay on, and is DTC 81-79 indicated?

   YES—Go to step 3.

   NO—Intermittent failure, the system is OK at this time. Go to Troubleshooting Intermittent Failures (see page 24-27). If another DTC is indicated, go to the DTC Troubleshooting Index.
3. Turn the ignition switch OFF.
4. Make sure nothing is on the front passenger's seat.
5. Turn the ignition switch ON (II), and check that the SRS indicator comes on for about 6 seconds and then goes off.

   Does the SRS indicator go off?

   YES—The system is OK.■

   NO—Remove the front passenger's seat assembly (see page 20-118) and the front passenger's weight sensors (see page 24-179), then reinstall them. Calibrate the ODS unit (see page 24-29). Retry the troubleshooting. If DTC 81-79 is still present, replace the front passenger's weight sensors.■

DTC 82-14: No Signal From the Front Passenger's Weight Sensor (front inner side)

NOTE: Before doing this troubleshooting procedure, review SRS Precautions and Procedures (see page 24-15).

1. Erase the DTC memory (see page 24-26).
2. Read the DTC (see page 24-25).

   Is DTC 82-14 indicated?

   YES—Go to step 3.

   NO—Intermittent failure, the system is OK at this time. Go to Troubleshooting Intermittent Failures (see page 24-27).

3. From the SRS INSPECTION menu on the HDS, select SWS DTC CHECK.

   Is another DTC also indicated?

   YES—
   - DTC 14-11: Short to power in the ODS unit harness; replace the ODS unit harness.■
   - DTC 14-12: Go to step 4.
   - DTC 14-13: Go to step 11.
   - DTC 14-14: Go to step 19.

   NO—Intermittent failure, the system is OK at this time. Go to Troubleshooting Intermittent Failures (see page 24-27).

4. Turn the ignition switch OFF.
5. Disconnect the ODS unit harness 3P connector (A) from the front passenger's weight sensor (front inner side).

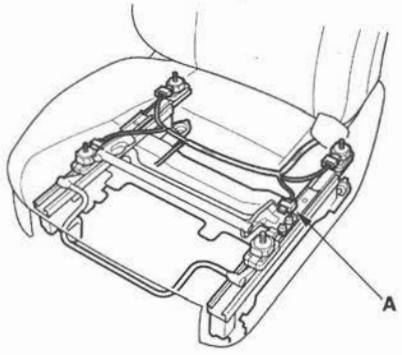

6. Read the DTC.

   Is DTC 14-12 indicated?

   YES—Go to step 7.

   NO—Faulty front passenger's weight sensor (front inner side); replace the front passenger's weight sensor (see page 24-179).■

7. Turn the ignition switch OFF.
8. Disconnect the ODS unit harness 18P connector (A) from the ODS unit.

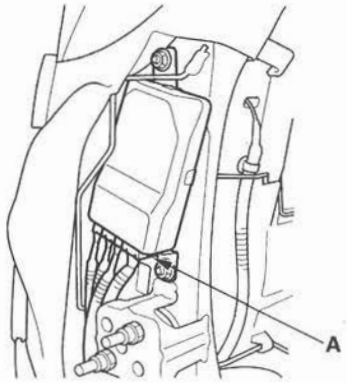

9. Check resistance between the No. 3 terminal of the ODS unit harness 18P connector and body ground. There should be an open circuit (ohmmeter reads OL) or at least 1 MΩ.

ODS UNIT HARNESS 18P CONNECTOR

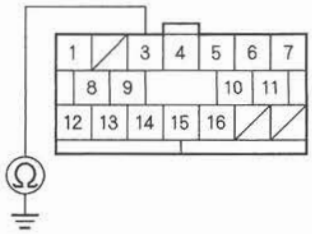

Wire side of female terminals

Is the resistance as specified?

YES—Go to step 10.

NO—Short to ground in the ODS unit harness; replace the ODS unit harness.■

(cont'd)

DTC Troubleshooting (cont'd)

10. Check resistance between the No. 3 terminal and No. 13 terminal of the ODS unit harness 18P connector. There should be an open circuit (ohmmeter reads OL) or at least 1 MΩ.

ODS UNIT HARNESS 18P CONNECTOR

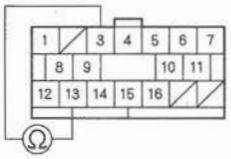

Wire side of female terminals

Is the resistance as specified?
YES—Faulty ODS unit; replace the ODS unit (see page 24-181).■
NO—Short to ground in the ODS unit harness; replace the ODS unit harness.■

11. Turn the ignition switch OFF.

12. Swap the connections between the front passenger's weight sensor (front inner side) and the front passenger's weight sensor (rear inner side).

13. Read the DTC.

Is DTC 14-13 indicated?
YES—Go to step 14.
NO—Faulty front passenger's weight sensor (front inner side); replace the front passenger's weight sensor (see page 24-179).■

14. Turn the ignition switch OFF.

15. Disconnect the front passenger's weight sensor (front inner side) connector (A) and front passenger's weight sensor (rear inner side) connector (B).

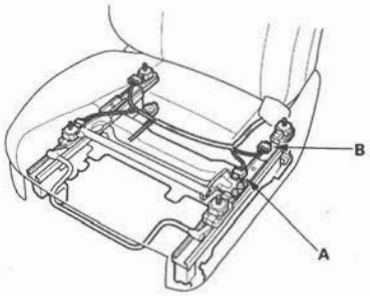

16. Disconnect the ODS unit harness 18P connector (A) from the ODS unit.

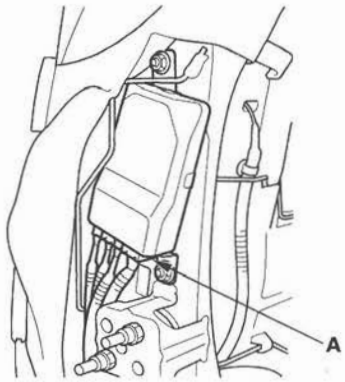

17. Turn the ignition switch ON (II).

18. Check for voltage between the No. 8 terminal of the ODS unit harness 18P connector and body ground. There should be 1 V or less.

ODS UNIT HARNESS 18P CONNECTOR

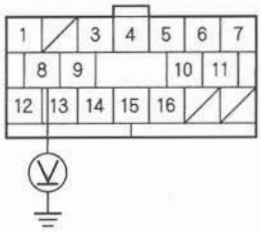

Wire side of female terminals

Is the voltage as specified?

YES—Faulty ODS unit; replace the ODS unit (see page 24-181).■

NO—Short to power in the ODS unit harness; replace the ODS unit harness.■

19. Turn the ignition switch OFF.

20. Disconnect the ODS unit harness 3P connector (A) from the front passenger's weight sensor (front inner side).

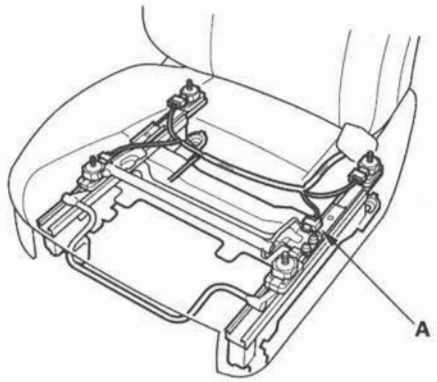

21. Read the DTC.

    Is DTC 14-14 indicated?

    YES—Go to step 22.

    NO—Faulty front passenger's weight sensor (front inner side); replace the faulty sensor. ■

22. Turn the ignition switch OFF.

23. Disconnect the ODS unit harness 18P connector (A) from the ODS unit.

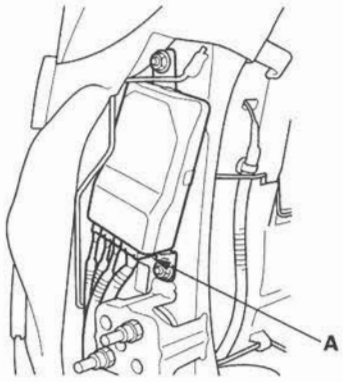

24. Check resistance between the No. 8 terminal of the ODS unit harness 18P connector and body ground. There should be an open circuit (ohmmeter reads OL) or at least 1 MΩ.

ODS UNIT HARNESS 18P CONNECTOR

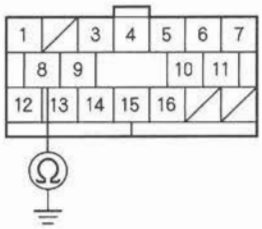

Wire side of female terminals

Is the resistance as specified?

YES—Go to step 25.

NO—Short to ground in the ODS unit harness; replace the ODS unit harness. ■

25. Check resistance between the No. 8 terminal and No. 13 terminal of the ODS unit harness 18P connector. There should be an open circuit (ohmmeter reads OL) or at least 1 MΩ.

ODS UNIT HARNESS 18P CONNECTOR

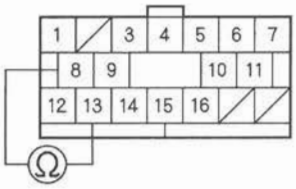

Wire side of female terminals

Is the resistance as specified?

YES—Faulty ODS unit; replace the ODS unit (see page 24-181). ■

NO—Short in the ODS unit harness; replace the ODS unit harness. ■

DTC Troubleshooting (cont'd)

DTC 82-16: No Signal From the Front Passenger's Weight Sensor (rear inner side)

NOTE: Before doing this troubleshooting procedure, review SRS Precautions and Procedures (see page 24-15).

1. Erase the DTC memory (see page 24-26).
2. Read the DTC (see page 24-25).

   Is DTC 82-16 indicated?

   YES—Go to step 3.

   NO—Intermittent failure, the system is OK at this time. Go to Troubleshooting Intermittent Failures (see page 24-27).

3. From the SRS INSPECTION menu on the HDS, select SWS DTC CHECK.

   Is another DTC also indicated?

   YES—
   - DTC 16-11: Short to power in the ODS unit harness; replace the ODS unit harness.■
   - DTC 16-12: Go to step 4.
   - DTC 16-13: Go to step 11.
   - DTC 16-14: Go to step 19.

   NO—Intermittent failure, the system is OK at this time. Go to Troubleshooting Intermittent Failures (see page 24-27).

4. Turn the ignition switch OFF.
5. Disconnect the ODS unit harness 3P connector (A) from the front passenger's weight sensor (rear inner side).

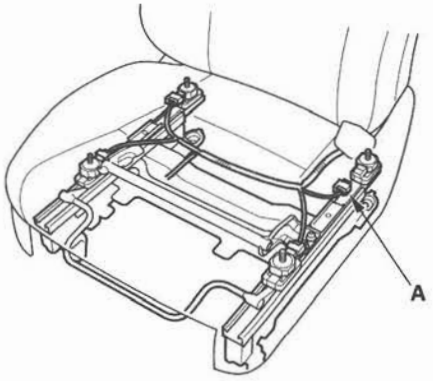

6. Read the DTC.

   Is DTC 16-12 indicated?

   YES—Go to step 7.

   NO—Faulty front passenger's weight sensor (rear inner side); replace the front passenger's weight sensor (see page 24-179).■

7. Turn the ignition switch OFF.
8. Disconnect the ODS unit harness 18P connector (A) from the ODS unit.

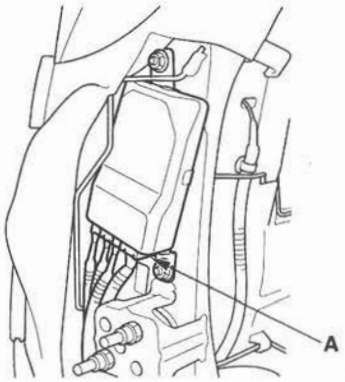

9. Check resistance between the No. 4 terminal of the ODS unit harness 18P connector and body ground. There should be an open circuit (ohmmeter reads OL) or at least 1 MΩ.

ODS UNIT HARNESS 18P CONNECTOR

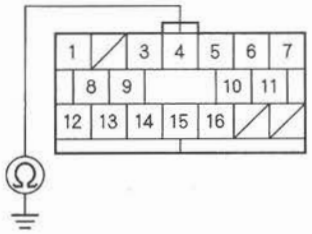

Wire side of female terminals

Is the resistance as specified?

YES—Go to step 10.

NO—Short to ground in the ODS unit harness; replace the ODS unit harness.■

10. Check resistance between the No. 4 terminal and No. 14 terminal of the ODS unit harness 18P connector. There should be an open circuit (ohmmeter reads OL) or at least 1 MΩ.

ODS UNIT HARNESS 18P CONNECTOR

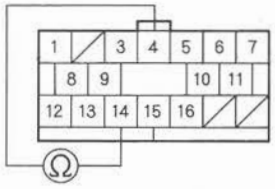

Wire side of female terminals

Is the resistance as specified?
YES—Faulty ODS unit; replace the ODS unit (see page 24-181).
NO—Short to ground in the ODS unit harness; replace the ODS unit harness.■

11. Turn the ignition switch OFF.

12. Swap the connections between the front passenger's weight sensor (front inner side) and the front passenger's weight sensor (front inner side).

13. Read the DTC.

Is DTC 16-13 indicated?
YES—Go to step 14.
NO—Faulty front passenger's weight sensor (rear inner side); replace the front passenger's weight sensor (see page 24-179).■

14. Turn the ignition switch OFF.

15. Disconnect the front passenger's weight sensor (front inner side) connector (A) and front passenger's weight sensor (rear inner side) connector (B).

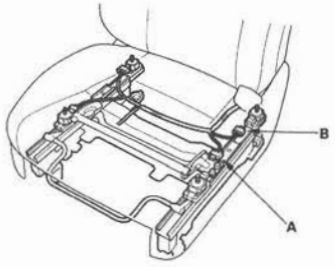

16. Disconnect the ODS unit harness 18P connector (A) from the ODS unit.

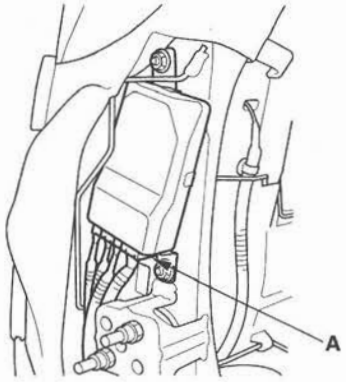

17. Turn the ignition switch ON (II).

18. Check for voltage between the No. 9 terminal of the ODS unit harness 18P connector and body ground. There should be 1 V or less.

ODS UNIT HARNESS 18P CONNECTOR

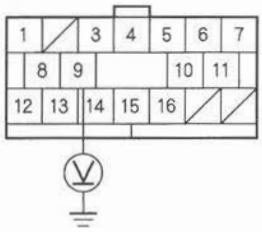

Wire side of female terminals

Is the voltage as specified?

YES—Faulty ODS unit; replace the ODS unit (see page 24-181).■

NO—Short to power in the ODS unit harness; replace the ODS unit harness.■

(cont'd)

DTC Troubleshooting (cont'd)

19. Turn the ignition switch OFF.

20. Disconnect the ODS unit harness 3P connector (A) from the front passenger's weight sensor (rear inner side).

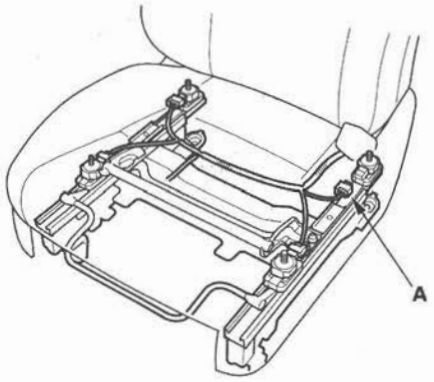

21. Read the DTC.

    Is DTC 16-14 indicated?

    YES—Go to step 22.

    NO—Faulty front passenger's weight sensor (rear inner side); replace the front passenger's weight sensor (see page 24-179). ■

22. Turn the ignition switch OFF.

23. Disconnect the ODS unit harness 18P connector (A) from the ODS unit.

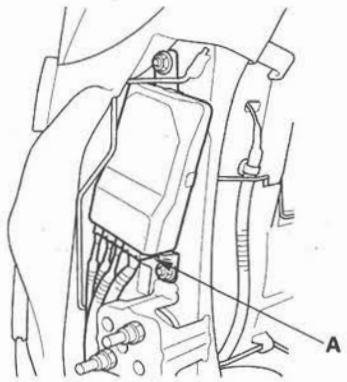

24. Check resistance between the No. 9 terminal of the ODS unit harness 18P connector and body ground. There should be an open circuit (ohmmeter reads OL) or at least 1 MΩ.

ODS UNIT HARNESS 18P CONNECTOR

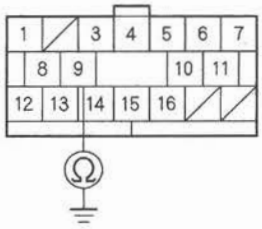

Wire side of female terminals

Is the resistance as specified?

YES—Go to step 25.

NO—Short to ground in the ODS unit harness; replace the ODS unit harness. ■

25. Check resistance between the No. 9 terminal and No. 14 terminal of the ODS unit harness 18P connector. There should be an open circuit (ohmmeter reads OL) or at least 1 MΩ.

ODS UNIT HARNESS 18P CONNECTOR

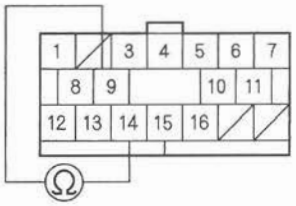

Wire side of female terminals

Is the resistance as specified?

YES—Faulty ODS unit; replace the ODS unit (see page 24-181). ■

NO—Short in the ODS unit harness; replace the ODS unit harness. ■

DTC 83-24: No Signal From the Front Passenger's Weight Sensor (front outer side)

NOTE: Before doing this troubleshooting procedure, review SRS Precautions and Procedures (see page 24-15).

1. Erase the DTC memory (see page 24-26).
2. Read the DTC (see page 24-25).

   Is DTC 83-24 indicated?

   YES—Go to step 3.

   NO—Intermittent failure, the system is OK at this time. Go to Troubleshooting Intermittent Failures (see page 24-27).

3. From INSPECTION menu on the HDS, select SWS DTC CHECK.

   Is another DTC also indicated?

   YES—
   - DTC 24-11: Short to power in the ODS unit harness; replace the ODS unit harness.■
   - DTC 24-12: Go to step 4.
   - DTC 24-13: Go to step 11.
   - DTC 24-14: Go to step 19.

   NO—Intermittent failure, the system is OK at this time. Go to Troubleshooting Intermittent Failures (see page 24-27).

4. Turn the ignition switch OFF.
5. Disconnect the ODS unit harness 3P connector (A) from the front passenger's weight sensor (front outer side).

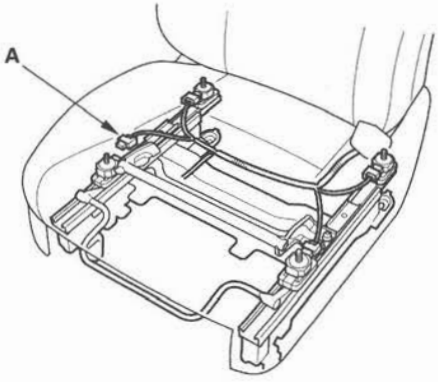

6. Read the DTC.

   Is DTC 24-12 indicated?

   YES—Go to step 7.

   NO—Faulty front passenger's weight sensor (front outer side); replace the front passenger's weight sensor (see page 24-179).■

7. Turn the ignition switch OFF.
8. Disconnect the ODS unit harness 18P connector (A) from the ODS unit.

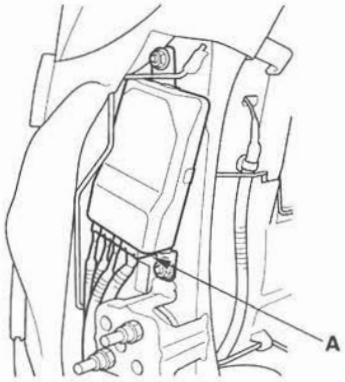

9. Check resistance between the No. 5 terminal of the ODS unit harness 18P connector and body ground. There should be an open circuit (ohmmeter reads OL) or at least 1 MΩ.

ODS UNIT HARNESS 18P CONNECTOR

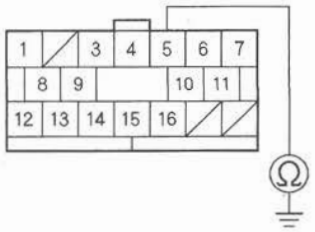

Wire side of female terminals

Is the resistance as specified?

YES—Go to step 10.

NO—Short to ground in the ODS unit harness; replace the ODS unit harness.■

(cont'd)

DTC Troubleshooting (cont'd)

10. Check resistance between the No. 5 terminal and No. 15 terminal of the ODS unit harness 18P connector. There should be an open circuit (ohmmeter reads OL) or at least 1 MΩ.

ODS UNIT HARNESS 18P CONNECTOR

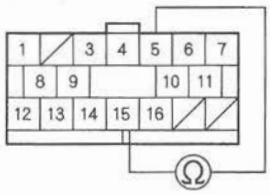

Wire side of female terminals

Is the resistance as specified?
YES—Faulty ODS unit; replace the ODS unit (see page 24-181).■
NO—Short to ground in the ODS unit harness; replace the ODS unit harness.■

11. Turn the ignition switch OFF.

12. Swap the connections between the front passenger's weight sensor (front outer side) and the front passenger's weight sensor (rear outer side).

13. Read the DTC.

Is DTC 24-13 indicated?
YES—Go to step 14.
NO—Faulty front passenger's weight sensor (front outer side); replace the front passenger's weight sensor (see page 24-179).■

14. Turn the ignition switch OFF.

15. Disconnect the front passenger's weight sensor (front outer side) connector (A) and front passenger's weight sensor (rear outer side) connector (B).

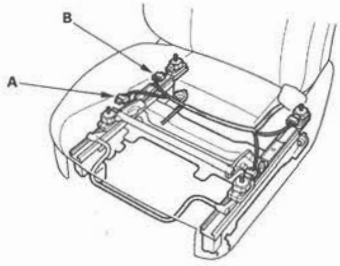

16. Disconnect the ODS unit harness 18P connector (A) from the ODS unit.

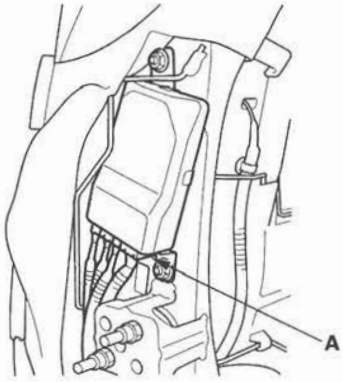

17. Turn the ignition switch ON (II).

18. Check for voltage between the No. 10 terminal of the ODS unit harness 18P connector and body ground. There should be 1 V or less.

ODS UNIT HARNESS 18P CONNECTOR

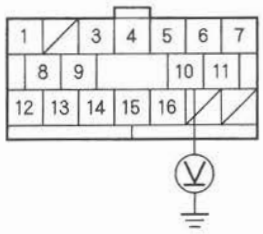

Wire side of female terminals

Is the voltage as specified?

YES—Faulty ODS unit; replace the ODS unit (see page 24-181).■

NO—Short to power in the ODS unit harness; replace the ODS unit harness.■

19. Turn the ignition switch OFF.

20. Disconnect the ODS unit harness 3P connector (A) from the front passenger's weight sensor (front outer side).

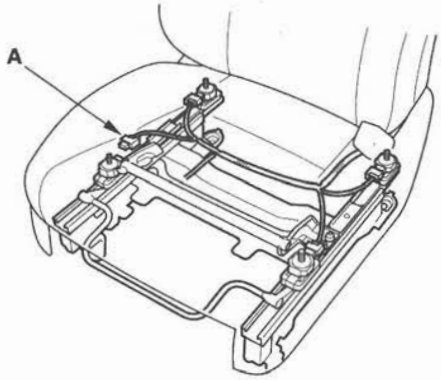

21. Read the DTC.

    Is DTC 24-14 indicated?

    YES—Go to step 22.

    NO—Faulty front passenger's weight sensor (front outer side); replace the front passenger's weight sensor (see page 24-179). ■

22. Turn the ignition switch OFF.

23. Disconnect the ODS unit harness 18P connector (A) from the ODS unit.

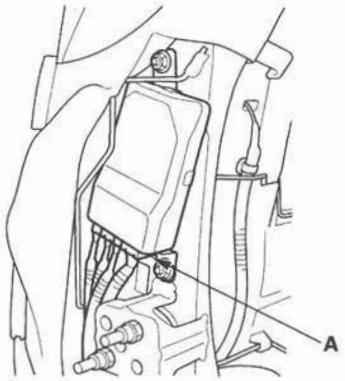

24. Check resistance between the No. 10 terminal of the ODS unit harness 18P connector and body ground. There should be an open circuit (ohmmeter reads OL) or at least 1 MΩ.

ODS UNIT HARNESS 18P CONNECTOR

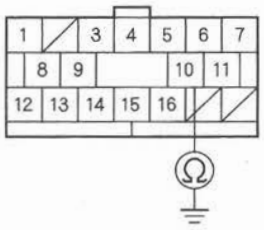

Wire side of female terminals

Is the resistance as specified?

YES—Go to step 25.

NO—Short to ground in the ODS unit harness; replace the ODS unit harness. ■

25. Check resistance between the No. 10 terminal and No. 15 terminal of the ODS unit harness 18P connector. There should be an open circuit (ohmmeter reads OL) or at least 1 MΩ.

ODS UNIT HARNESS 18P CONNECTOR

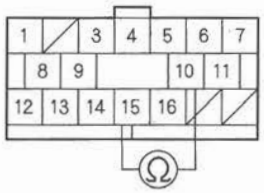

Wire side of female terminals

Is the resistance as specified?

YES—Faulty ODS unit; replace the ODS unit (see page 24-181). ■

NO—Short in the ODS unit harness; replace the ODS unit harness. ■

DTC Troubleshooting (cont'd)

DTC 83-26: No Signal From the Front Passenger's Weight Sensor (rear outer side)

NOTE: Before doing this troubleshooting procedure, review SRS Precautions and Procedures (see page 24-15).

1. Erase the DTC memory (see page 24-26).
2. Read the DTC (see page 24-25).

   Is DTC 83-26 indicated?

   YES—Go to step 3.

   NO—Intermittent failure, the system is OK at this time. Go to Troubleshooting Intermittent Failures (see page 24-27).

3. From INSPECTION menu on the HDS, select SWS DTC CHECK.

   Is another DTC also indicated?

   YES—
   - DTC 26-11: Short to power in the ODS unit harness; replace the ODS unit harness.■
   - DTC 26-12: Go to step 4.
   - DTC 26-13: Go to step 11.
   - DTC 26-14: Go to step 19.

   NO—Intermittent failure, the system is OK at this time. Go to Troubleshooting Intermittent Failures (see page 24-27).

4. Turn the ignition switch OFF.
5. Disconnect the ODS unit harness 3P connector (A) from the front passenger's weight sensor (rear outer side).

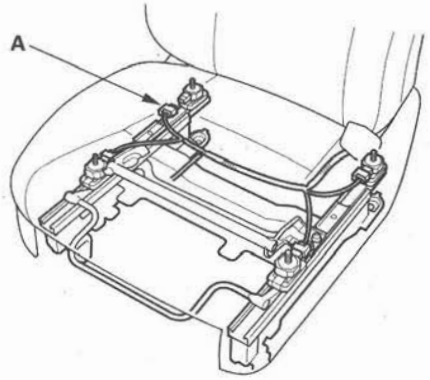

6. Read the DTC.

   Is DTC 26-12 indicated?

   YES—Go to step 7.

   NO—Faulty front passenger's weight sensor (rear outer side); replace the front passenger's weight sensor (see page 24-179).■

7. Turn the ignition switch OFF.
8. Disconnect the ODS unit harness 18P connector (A) from the ODS unit.

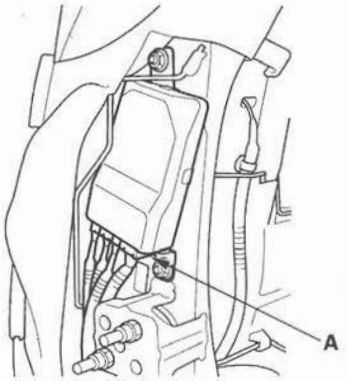

9. Check resistance between the No. 6 terminal of the ODS unit harness 18P connector and body ground. There should be an open circuit (ohmmeter reads OL) or at least 1 MΩ.

ODS UNIT HARNESS 18P CONNECTOR

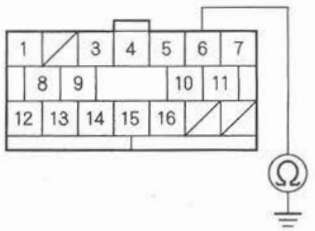

Wire side of female terminals

Is the resistance as specified?

YES—Go to step 10.

NO—Short to ground in the ODS unit harness; replace the ODS unit harness.■

10. Check resistance between the No. 6 terminal and No. 16 terminal of the ODS unit harness 18P connector. There should be an open circuit (ohmmeter reads OL) or at least 1 MΩ.

ODS UNIT HARNESS 18P CONNECTOR

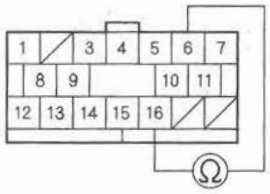

Wire side of female terminals

Is the resistance as specified?
YES—Faulty ODS unit; replace the ODS unit (see page 24-181).■
NO—Short to ground in the ODS unit harness; replace the ODS unit harness.■

11. Turn the ignition switch OFF.

12. Swap the connections between the front passenger's weight sensor (rear outer side) and the front passenger's weight sensor (front outer side).

13. Read the DTC.

Is DTC 26-13 indicated?
YES—Go to step 14.
NO—Faulty front passenger's weight sensor (rear outer side); replace the front passenger's weight sensor (see page 24-179).■

14. Turn the ignition switch OFF.

15. Disconnect the front passenger's weight sensor (rear outer side) connector (A) and front passenger's weight sensor (front outer side) connector (B).

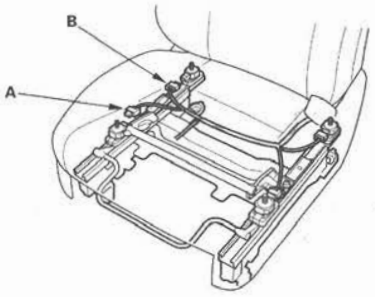

16. Disconnect the ODS unit harness 18P connector (A) from the ODS unit.

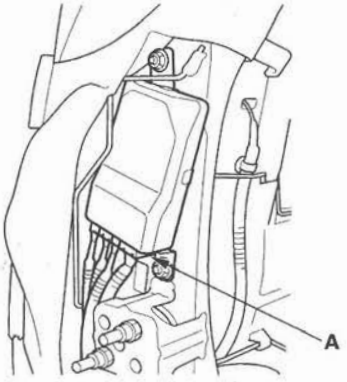

17. Turn the ignition switch ON (II).

18. Check for voltage between the No. 11 terminal of the ODS unit harness 18P connector and body ground. There should be 1 V or less.

ODS UNIT HARNESS 18P CONNECTOR

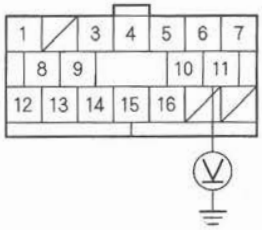

Wire side of female terminals

Is the voltage as specified?

YES—Faulty ODS unit; replace the ODS unit (see page 24-181).■

NO—Short to power in the ODS unit harness; replace the ODS unit harness.■

(cont'd)

DTC Troubleshooting (cont'd)

19. Turn the ignition switch OFF.

20. Disconnect the ODS unit harness 3P connector (A) from the front passenger's weight sensor (rear outer side).

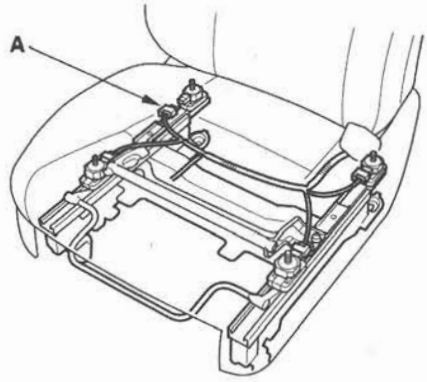

21. Read the DTC.

    Is DTC 26-14 indicated?

    YES—Go to step 22.

    NO—Faulty front passenger's weight sensor (rear outer side); replace the front passenger's weight sensor (see page 24-179).■

22. Turn the ignition switch OFF.

23. Disconnect the ODS unit harness 18P connector (A) from the ODS unit.

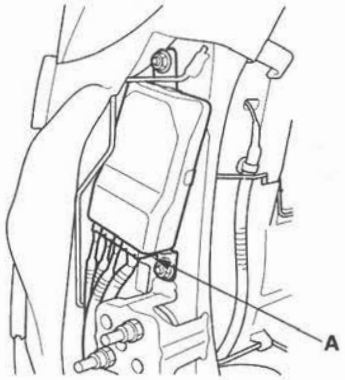

24. Check resistance between the No. 11 terminal of the ODS unit harness 18P connector and body ground. There should be an open circuit (ohmmeter reads OL) or at least 1 MΩ.

ODS UNIT HARNESS 18P CONNECTOR

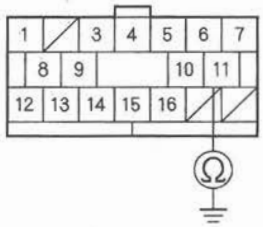

Wire side of female terminals

Is the resistance as specified?

YES—Go to step 25.

NO—Short to ground in the ODS unit harness; replace the ODS unit harness.■

25. Check resistance between the No. 11 terminal and No. 16 terminal of front passenger's seat wire harness 18P connector. There should be an open circuit (ohmmeter reads OL) or at least 1 MΩ.

ODS UNIT HARNESS 18P CONNECTOR

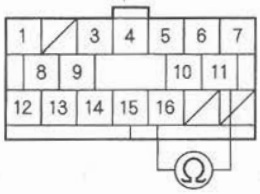

Wire side of female terminals

Is the resistance as specified?

YES—Faulty ODS unit; replace the ODS unit (see page 24-181).■

NO—Short in the ODS unit harness; replace the ODS unit harness.■

DTC 85-4x, 85-5x ("x" can be 0 thru 9 or A thru F), 85-63, 85-64: Internal Failure of the ODS Unit

NOTE:
- An incorrect ODS unit can cause DTC 85-63.
- Before doing this troubleshooting procedure, review SRS Precautions and Procedures (see page 24-15).

1. Erase the DTC memory (see page 24-26).
2. Turn the ignition switch ON (II), and check that the SRS indicator comes on for about 6 seconds and then goes off.

   Does the SRS indicator stay on, and is DTC85-4x, 85-5x, 85-63, or 85-64 indicated?

   YES—Go to step 3.

   NO—Intermittent failure, the system is OK at this time. Go to Troubleshooting Intermittent Failures (see page 24-27). If another DTC is indicated, go to the DTC Troubleshooting Index.
3. Initialize the ODS unit (see page 24-28).
4. Turn the ignition switch ON (II), and check that the SRS indicator comes on for about 6 seconds and then goes off.

   Does the SRS indicator go off?

   YES—The system is OK.■

   NO—Replace the ODS unit (see page 24-181) and retest.■

DTC 85-79: OPDS Sensor Drift Check Failure

NOTE: Before doing this troubleshooting procedure, review SRS Precautions and Procedures (see page 24-15).

1. Erase the DTC memory (see page 24-26).
2. Turn the ignition switch ON (II), and check that the SRS indicator comes on for about 6 seconds and then goes off.

   Does the SRS indicator stay on, and is DTC 85-79 indicated?

   YES—Turn the ignition switch OFF, and go to step 3.

   NO—Intermittent failure, the system is OK at this time. Go to Troubleshooting Intermittent Failures (see page 24-27). If another DTC is indicated, go to the DTC Troubleshooting Index.
3. Make sure nothing is on the front passenger's seat.
4. Turn the ignition switch ON (II), and check that the SRS indicator comes on for about 6 seconds and then goes off.

   Does the SRS indicator go off?

   YES—The system is OK.■

   NO—Go to step 5.
5. Initialize the ODS unit (see page 24-28).
6. Turn the ignition switch ON (II), and check that the SRS indicator comes on for about 6 seconds and then goes off.

   Does the SRS indicator go off?

   YES—The system is OK.■

   NO—Replace the ODS unit (see page 24-181) and retest. If the problem is still present, replace the OPDS sensor/seat-back (see page 20-125).■

DTC Troubleshooting (cont'd)

DTC 86-1x ("x" can be 0 thru 9 or A thru F):
Faulty OPDS Seat-Back Sensor

DTC 86-2x ("x" can be 0 thru 9 or A thru F):
Faulty OPDS Seat Support Sensor

NOTE: Before doing this troubleshooting procedure, review SRS Precautions and Procedures (see page 24-15).

1. Erase the DTC memory (see page 24-26).
2. Turn the ignition switch ON (II), and check that the SRS indicator comes on for about 6 seconds and then goes off.

   Does the SRS indicator stay on, and is DTC 86-1x or 86-2x indicated?

   YES—Go to step 3.

   NO—Intermittent failure, the system is OK at this time. Go to Troubleshooting Intermittent Failures (see page 24-27). If another DTC is indicated, go to the DTC Troubleshooting Index.

   NOTE: Aftermarket devices (fluorescent lights, laptop computers, etc.) used near the front passenger's seat-back can interfere with the seat-back sensors and cause a false DTC 86-1x or 86-2x. If one of these devices was used, erase the DTC, operate the device near the seat-back, and recheck for DTCs. If DTC 86-1x or 86-2x is set, erase it, and do not use the device near the seat-back.

3. Check the connection at the OPDS sensor harness connectors (A) and the ODS unit connector (B).

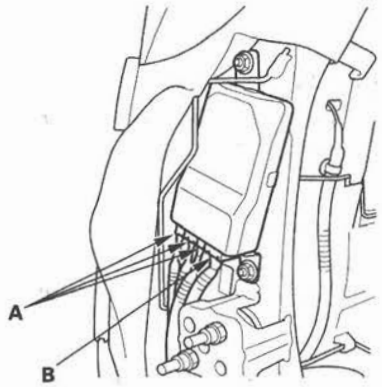

   Is the connection OK?

   YES—Go to step 4.

   NO—Repair the poor connection, and clear the DTC.■

4. Replace the OPDS sensor/seat-back foam (see page 20-125), and initialize the ODS (see page 24-28).
5. Erase the DTC memory, then check for DTC 86-1x or 86-2x.

   Is DTC 86-1x or 86-2x indicated?

   YES—Replace the ODS unit (see page 24-181).■

   NO—The system is OK.■

DTC 92-1x ("x" can be 0 thru 9 or A thru F): Short to Power in the Passenger's Airbag Cutoff Indicator

NOTE: Before doing this troubleshooting procedure, review SRS Precautions and Procedures (see page 24-15).

1. Erase the DTC memory (see page 24-26).
2. Turn the ignition switch ON (II), and check that the SRS indicator comes on for about 6 seconds and then goes off.

   Does the SRS indicator stay on, and is DTC 92-1x indicated?

   YES—Go to step 3.

   NO—Intermittent failure, the system is OK at this time. Go to Troubleshooting Intermittent Failures (see page 24-27). If another DTC is indicated, go to the DTC Troubleshooting Index.
3. Disconnect the passenger's airbag cutoff indicator 6P connector (see page 24-184).
4. Turn the ignition switch OFF. Disconnect the negative cable from the battery, and wait for 3 minutes.
5. Disconnect SRS unit connector A (28P) from the SRS unit (see step 8 on page 24-24).
6. Reconnect the negative cable to the battery.
7. Turn the ignition switch ON (II).
8. Check for voltage between the No. 13 terminal of SRS unit connector A (28P) and body ground. There should be 0.5 V or less.

SRS UNIT CONNECTOR A (28P)

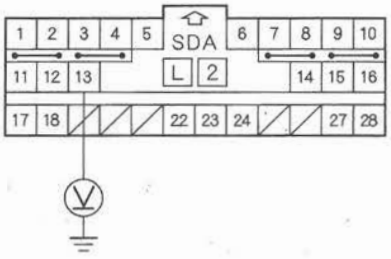

Wire side of female terminals

Is the voltage as specified?

YES—Faulty SRS unit or passenger's airbag cutoff indicator; replace the passenger's airbag cutoff indicator. If the problem is still present, replace the SRS unit (see page 24-176). ■

NO—Short to power in the dashboard wire harness; replace the dashboard wire harness. ■

DTC Troubleshooting (cont'd)

DTC 92-2x ("x" can be 0 thru 9 or A thru F): Open or Short to Ground in the Passenger's Airbag Cutoff Indicator

NOTE: Before doing this troubleshooting procedure, review SRS Precautions and Procedures (see page 24-15).

1. Erase the DTC memory (see page 24-26).
2. Turn the ignition switch ON (II), and check that the SRS indicator comes on for about 6 seconds and then goes off.

   Does the SRS indicator stay on, and DTC 92-2x indicated?

   YES—Go to step 3.

   NO—Intermittent failure, the system is OK at this time. Go to Troubleshooting Intermittent Failures (see page 24-27). If another DTC is indicated, go to the DTC Troubleshooting Index.
3. Disconnect the passenger's airbag cutoff indicator 6P connector (see page 24-184).
4. Turn the ignition switch OFF. Disconnect the negative cable from the battery, and wait for 3 minutes.
5. Disconnect SRS unit connector A (28P) from the SRS unit (see step 8 on page 24-24).
6. Check resistance between the No. 2 terminal of the passenger's airbag cutoff indicator 6P connector and the No. 13 terminal of SRS unit connector A (28P). There should be 0—1.0 Ω.

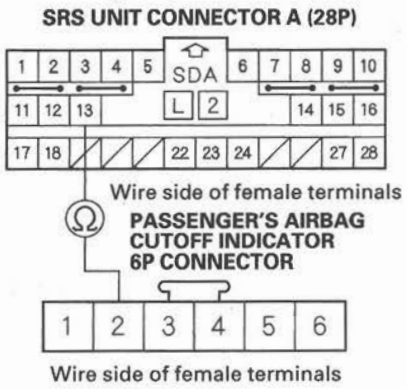

Is the resistance as specified?

YES—Go to step 7.

NO—Open in the dashboard wire harness; replace the dashboard wire harness.■

7. Check resistance between the No. 13 terminal of the SRS unit connector A (28P) and body ground. There should be an open circuit (ohmmeter reads OL) or at least 1 MΩ.

SRS UNIT CONNECTOR A (28P)

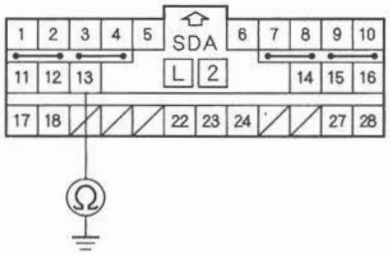

Wire side of female terminals

Is the resistance as specified?

YES—Replace the passenger's airbag cutoff indicator. If the problem is still present, replace the SRS unit (see page 24-176).■

NO—Short to ground in the dashboard wire harness; replace the dashboard wire harness.■

DTC Troubleshooting (cont'd)

DTC A1-1x ("x" can be 0 thru 9 or A thru F): Faulty Power supply (VA Line)

NOTE: Before doing this troubleshooting procedure, review SRS Precautions and Procedures (see page 24-15).

1. Erase the DTC memory (see page 24-26).
2. Turn the ignition switch ON (II), and check that the SRS indicator comes on for about 6 seconds and then goes off.
3. Read the DTC (see page 24-25).

   Is DTC A1-1x indicated?

   YES—Go to step 4.

   NO—Intermittent failure, the system is OK at this time. Go to Troubleshooting Intermittent Failures (see page 24-27). If another DTC is indicated, go to the DTC Troubleshooting Index.
4. Turn the ignition switch OFF.
5. Check the No. 9 (7.5 A) fuse in the under-dash fuse/relay box.

   Is the fuse OK?

   YES—Go to step 6.

   NO—Replace the fuse, then turn the ignition switch ON (II). If the fuse blows again, check for a short in the No. 9 (7.5 A) fuse circuit (dashboard wire harness, floor wire harness, front passenger's seat subharness, or front passenger's seat wire harness). ■
6. Disconnect the negative cable from the battery, and wait for 3 minutes.
7. Disconnect the SRS unit connector A (28P) from the SRS unit (see step 8 on page 24-24).
8. Turn the ignition switch ON (II).
9. Connect a voltmeter between the No. 17 terminal of SRS unit connector A (28P) and body ground. Turn the ignition switch ON (II), and measure voltage. There should be battery voltage when the ignition is on.

SRS UNIT CONNECTOR A (28P)

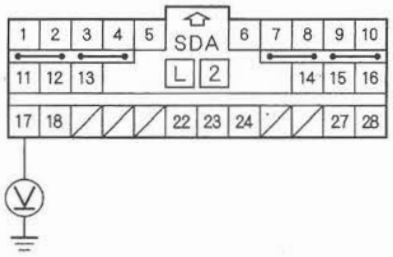

Wire side of female terminals

Is there battery voltage?

YES—Faulty SRS unit or poor connection at SRS unit connector (A) 28P and the SRS unit. Check the connection between the connector and the SRS unit. If the connection is OK, replace the SRS unit (see page 24-176). ■

NO—Go to step 10.

10. Turn the ignition switch OFF.

11. Disconnect under-dash fuse/relay box connector J (4P).

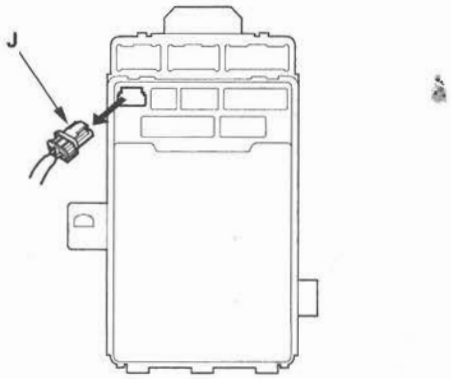

12. Check resistance between the No. 4 terminal of under-dash fuse/relay box connector J (4P) and the No. 17 terminal of SRS unit connector A (28P). There should be 0—1.0 Ω.

UNDER-DASH FUSE/RELAY BOX CONNECTOR J (4P) **SRS UNIT CONNECTOR A (28P)**

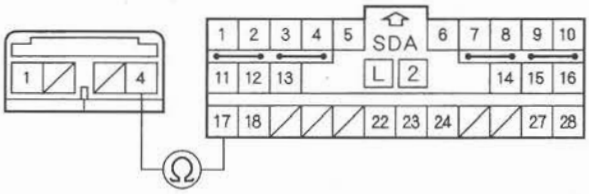

Wire side of female terminals

Is the resistance as specified?

YES—Open in the under-dash fuse/relay box or poor contact between connector J (4P) and the under-dash fuse/relay box; check the connection. If the connection is OK, replace the under-dash fuse/relay box (see page 22-63).■

NO—Open in the dashboard wire harness; replace the dashboard wire harness.■

DTC A2-1x ("x" can be 0 thru 9 or A thru F): Faulty Power Supply (VB Line)

NOTE: Before doing this troubleshooting procedure, review SRS Precautions and Procedures (see page 24-15).

1. Check the No. 11 (10 A) fuse in the under-dash fuse/relay box.

   Is the fuse OK?

   YES—Go to step 11.

   NO—Go to step 2.

2. Replace the No. 11 (10 A) fuse.

3. Turn the ignition switch ON (II) and wait for 30 seconds. Then turn the ignition switch OFF.

4. Check the No. 11 (10 A) fuse.

   Is the fuse OK?

   YES—The system is OK at this time.■

   NO—Go to step 5.

5. Replace the No. 11 (10 A) fuse.

6. Turn the ignition switch OFF. Disconnect the negative cable from the battery, and wait for 3 minutes.

7. Disconnect SRS unit connector A (28P) from the SRS unit (see step 8 on page 24-24).

8. Reconnect the negative cable to the battery.

9. Turn the ignition switch ON (II), and wait for 30 seconds. Then turn the ignition switch OFF.

(cont'd)

DTC Troubleshooting (cont'd)

10. Check the No. 11 (10 A) fuse.

    Is the fuse OK?

    YES—Short to ground in the SRS unit; replace the SRS unit (see page 24-176). ■

    NO—Short to ground in the dashboard wire harness or in the under-dash fuse/relay box No. 11 (10 A) fuse line; replace the dashboard wire harness. If the problem is still there, replace the under-dash fuse/relay box (see page 22-64). ■

11. Turn the ignition switch OFF. Disconnect the negative cable from the battery, and wait for 3 minutes.

12. Disconnect SRS unit connector A (28P) from the SRS unit (see step 8 on page 24-24).

13. Reconnect the negative cable to the battery.

14. Connect a voltmeter between the No. 18 terminal of SRS unit connector A (28P) and body ground. Turn the ignition switch ON (II), and measure voltage. There should be battery voltage when the ignition on.

SRS UNIT CONNECTOR A (28P)

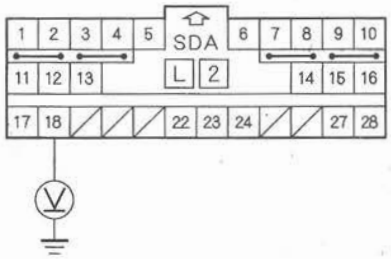

Wire side of female terminals

Is there battery voltage?

YES—Faulty SRS unit or poor connection at SRS unit connector A (28P) and the SRS unit; check the connection. If the connection is OK, replace the SRS unit (see page 24-176). ■

NO—Go to step 15.

15. Turn the ignition switch OFF.

16. Disconnect under-dash fuse/relay box connector J (4P).

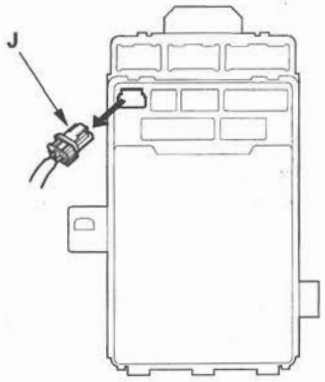

17. Check resistance between the No. 1 terminal of the under-dash fuse/relay box connector J (4P) and the No. 18 terminal of SRS unit connector A (28P). There should be 0—1.0 Ω.

UNDER-DASH FUSE/RELAY BOX CONNECTOR J (4P) **SRS UNIT CONNECTOR A (28P)**

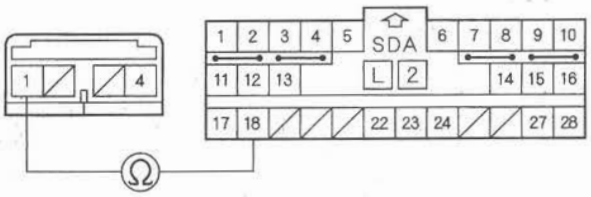

Wire side of female terminals

Is the resistance as specified?

YES—Open in the under-dash fuse/relay box or poor connection between connector J (4P) and the under-dash fuse/relay box; check the connection. If the connection is OK, replace the under-dash fuse/relay box (see page 22-64). ■

NO—Open in the dashboard wire harness; replace the dashboard wire harness. ■

Symptom Troubleshooting

SRS indicator does not come on

1. Connect the HDS to the DLC (see page 24-25).■
2. Turn the ignition switch ON (II).
3. Make sure the HDS communicates with the vehicle and the SRS unit. If it does not communicate, troubleshoot the DLC circuit (see page 11-197).
4. Check for PGM-FI, Body Electrical, and SRS DTCs with the HDS.

   Are there any PGM-FI, Body Electrical, or SRS DTCs?

   YES—Go to the indicated DTCs troubleshooting.

   NO—Go to step 5.
5. Do the gauge control module self-diagnostic function (see page 22-229).■

   Does the SRS indicator come on?

   YES—Faulty SRS unit; replace the SRS unit (see page 24-176).■

   NO—Faulty gauge control module; replace the gauge control module (see page 22-248).■

SRS indicator stays on, but no DTCs are stored

1. Connect the HDS to the DLC (see page 24-25).
2. Turn the ignition switch ON (II).
3. Make sure the HDS communicates with the vehicle and the SRS unit. If it does not communicate, troubleshoot the DLC circuit (see page 11-197).
4. Select Body Electrical status with the HDS.
5. Check for DTCs in the Gauge Menu with the HDS.

   Is DTC B1187 indicated?

   YES—Go to the troubleshooting for DTC B1187 (see page 22-244).

   NO—Go to step 6.
6. Check that the HDS communicates with the SRS unit.

   Does the HDS communicates with the SRS unit?

   YES—Go to step 7.

   NO—If the HDS does not communicate with the SRS unit, check for power and ground at the SRS unit connector A (28P). If power and grounds are still present, replace the SRS unit (see page 24-176).
7. From the HDS System Menu, select SRS, then SRS in Mode Menu, PARAMETER INFORMATION, then SCS, MES, Indicator. Read the current status of the SRS indicator.

   Is the status ON?

   YES—Faulty SRS unit; replace the SRS unit (see page 24-176).■

   NO—Faulty gauge control module; replace the gauge control module (see page 22-248).■

Symptom Troubleshooting (cont'd)

Side airbag cutoff indicator stays on

1. Make sure nothing is on the front passenger's seat.
2. Make sure the seat-back is dry.
3. Turn the ignition switch ON (II), and see if the SRS indicator comes on.

   Does the SRS indicator come on?

   YES—Go to the Symptom Troubleshooting "SRS indicator stays on, but no DTCs are stored" (see page 24-155).

   NO—Go to step 2.
4. Connect the HDS to the DLC (see page 24-25).
5. Make sure the HDS communicates with the vehicle and the SRS unit. If it does not troubleshoot the DLC circuit (see page 11-197).
6. From the Main Menu on the HDS, select SRS, then PARAMETER INFORMATION. In the PARAMETER INFORMATION Menu, select "SCS, MES, Indicator," and read what is indicated on the HDS.

   Is OFF indicated on the HDS?

   YES—Faulty gauge control module; replace the gauge control module (see page 22-248). ■

   NO—Faulty SRS unit; replace the SRS unit (see page 24-176). ■

Side airbag cutoff indicator does not come on

NOTE: If the SRS indicator also stays on, go to SRS indicator stays on, but no DTCs are stored (see page 24-155).

1. Turn the ignition switch ON (II), and check that the side airbag cutoff indicator comes on for about 6 seconds.

   Does the side airbag cutoff indicator come on?

   YES—Go to the Symptom Troubleshooting "SRS indicator stay on."

   NO—Go to step 2.
2. Connect the HDS to the DLC (see page 24-25).
3. Make sure the HDS communicates with the vehicle and the SRS unit. If it does not troubleshoot the DLC circuit (see page 11-197).
4. Do the self diagnostic function with the HDS.

   Does the side airbag cutoff indicator come on?

   YES—Faulty SRS unit; replace the SRS unit (see page 24-176). ■

   NO—Faulty gauge control module; replace the gauge control module (see page 22-248). ■

Passenger's airbag cutoff indicator stays on or comes on suddenly

NOTE: Under the following conditions, the passenger's airbag cutoff indicator stays on or comes on suddenly.
- No one is sitting the front passenger's seat, but there is an object on the seat more than 5 kg (11 lbs).
- The seat belt is buckled, but no one is sitting on the front passenger's seat.
- Someone who is less than 30 kg (66 lbs) is sitting on the front passenger's seat.
- Someone who is more than 30 kg (66 lbs) but is supporting some of their body weight on their legs, feet, arms, or hands.

1. Check for these items, then recheck the passenger's airbag cutoff indicator.
   - The fornt passenger's seat is installed correctly.
   - Nothing is/was on the front passenger's seat.
   - Nothing is/was under the front passenger's seat.
   - Nothing is/was in the front passenger's seat-back pocket.
   - Whoever was sitting on the passenger's seat was sitting in the proper sitting position.

   Does the passenger's airbag cutoff indicator stay on?

   YES—Go to step 2.

   NO—Troubleshooting is complete.■

2. Connect the HDS to the DLC (see page 24-25).

3. Turn the ignition switch ON (II).

4. Make sure the HDS communicates with the vehicle and the SRS unit. If it does not communicate troubleshoot the DLC circuit (see page 11-197).

5. Select the INSPECTION menu on the HDS, then select AFTER REPLACING FRONT PASSENGER'S SEAT COMPONENT(S), and follows the prompts.

   Does the passenger's airbag cutoff indicator stay on?

   YES—Go to step 6.

   NO—Troubleshooting is complete.■

6. Select the INSPECTION menu on the HDS, then select AFTER A VEHICLE COLLISION, and follow the prompts.

   Does the passenger's airbag cutoff indicator stay on?

   YES—Faulty SRS unit; replace the SRS unit (see page 24-176).■

   NO—Troubleshooting is complete.■

Component Replacement/Inspection After Deployment

NOTE:
- Before doing any SRS repairs, use the HDS SRS menu method to check for DTCs; refer to the DTC Troubleshooting Index for the less obvious deployed parts (seat belt tensioners, front impact sensors, side airbag sensors, etc.)
- Do not replace the ODS unit unless it is physically damaged or a specific fault was found during DTC troubleshooting.

After a collision where the seat belt tensioners deployed, replace these items:
- SRS unit
- Seat belt tensioners
- Seat belt buckle tensioners
- Front impact sensors

After a collision where the front airbag(s) deployed, replace these items:
- SRS unit
- Deployed airbag(s)
- Seat belt tensioners
- Seat belt buckle tensioners
- Front impact sensors

After a collision where the side airbag(s) deployed, replace these items:
- SRS unit
- Deployed side airbag(s)
- Side impact sensor(s) (first) for the side(s) that deployed
- Side impact sensor(s) (second) for the side(s) that deployed
- B-pillar lower trim
- Complete seat frame
- All related trim clips

After a collision where the side curtain airbag(s) deployed, replace these items:
- SRS unit
- Deployed side curtain airbag(s)
- Seat belt tensioner(s) for the side(s) that deployed
- Seat belt buckle tensioner(s) for the side(s) that deployed
- Side impact sensor(s) (first) for the side(s) that deployed
- Side impact sensor(s) (second) for the side(s) that deployed
- Roof trim
- A-pillar trim
- B-pillar upper trim
- B-pillar lower trim
- C-pillar trim
- Front grab handle
- Rear grab handle
- All related trim clips
- Sunvisor

After a moderate to severe side or rear collision, inspect for any damage on the side curtain airbag or other related components. Replace components as needed.

A-pillar trim

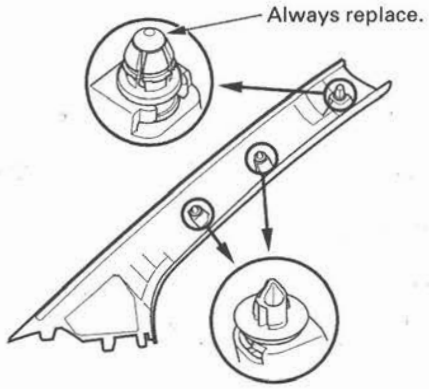

B-pillar trim

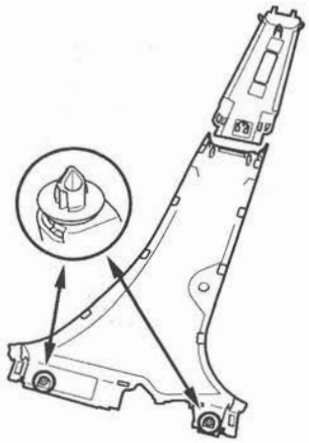

C-Pillar trim

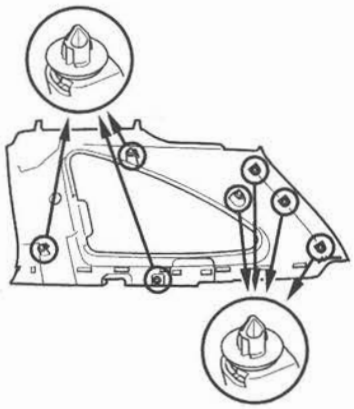

During the repair process, inspect these areas:
- Inspect all the SRS wire harnesses. Replace, do not repair, any damaged harnesses.
- Inspect the cable reel for heat damage. If there is any damage, replace the cable reel.

After the vehicle is completely repaired, turn the ignition switch ON (II). If the SRS indicator comes on for about 6 seconds and then goes off, the SRS is OK. If the indicator does not function properly, use the HDS SRS Menu Method to read the DTC (see page 24-25). If you cannot retrieve a code, go to SRS Symptom Troubleshooting (see page 24-155).

(cont'd)

Component Replacement/Inspection After Deployment (cont'd)

Checking and Adjusting the Headliner/Pillar Trim Overlap

To prevent the side curtain airbag from deploying and damaging the pillar trim, the overlap between the headliner and pillar trim must be less then 0.3 in. (8 mm). To check the overlap, do this:

1. Install the headliner (A) and the pillar trim (B).

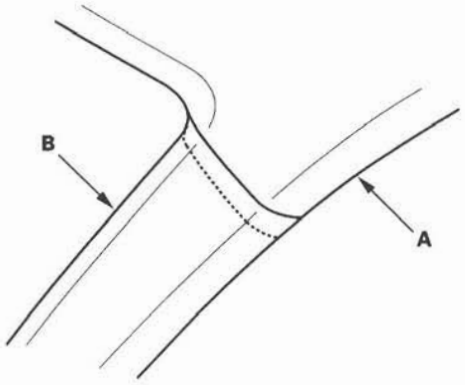

2. Using masking tape on the headliner, mark the upper edge of each pillar trim.

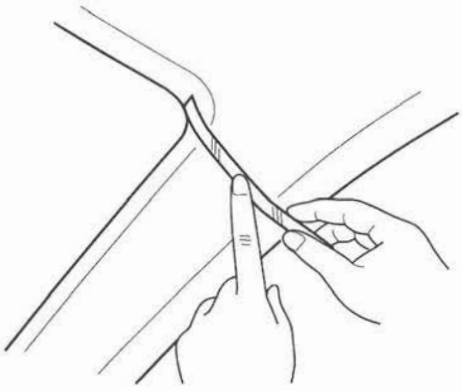

3. Remove the pillar trim, and measure the headliner overlap.
   - If the overlap is less than 0.3 in. (8 mm), remove the tape, and install the pillar trim.
   - If the overlap is more than 0.3 in. (8 mm), go to step 4.

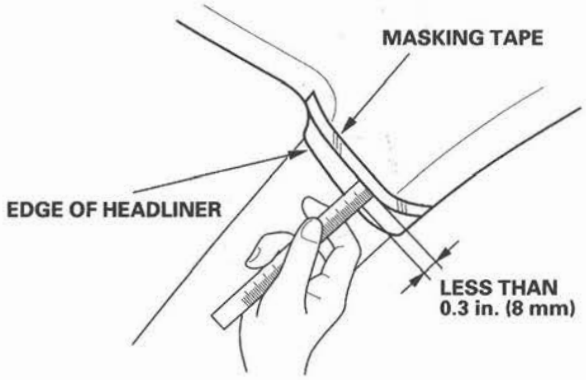

4. Carefully trim the headliner with a utility knife, reducing the overlap to less than 0.3 in. (8 mm).

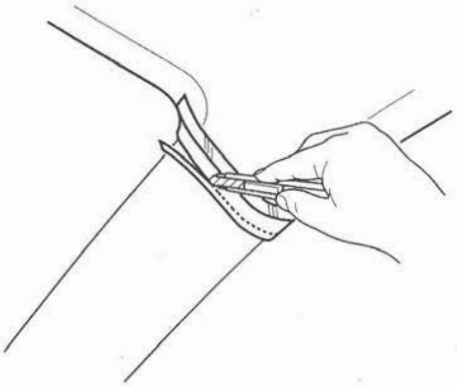

5. Remove the tape, and install the pillar trim.

Driver's Airbag Replacement

Removal

1. Disconnect the negative cable from the battery and wait at least 3 minutes before beginning work.
2. Remove the access panel (A) from the steering wheel, then disconnect the driver's airbag 4P connector (B) and horn switch 1P connector (C) from the cable reel.

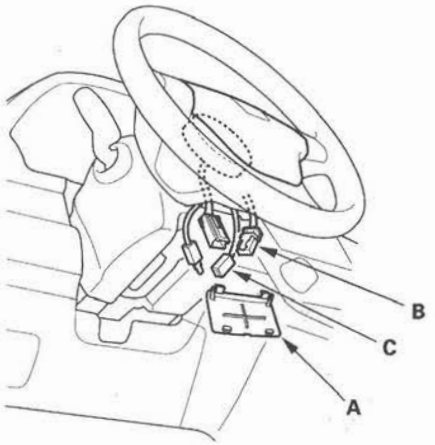

3. Using a TORX T30 bit, remove the two TORX bolts (A).

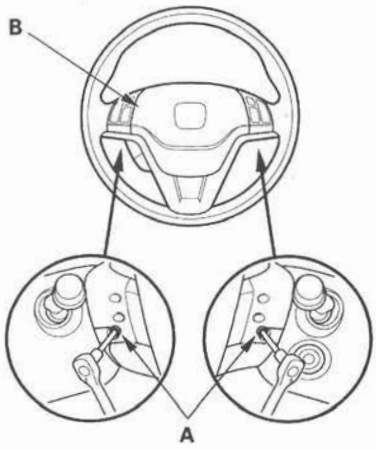

4. Remove the driver's airbag (B).

Installation

1. Connect the horn switch connector (1P) (A) to the driver's airbag (B).

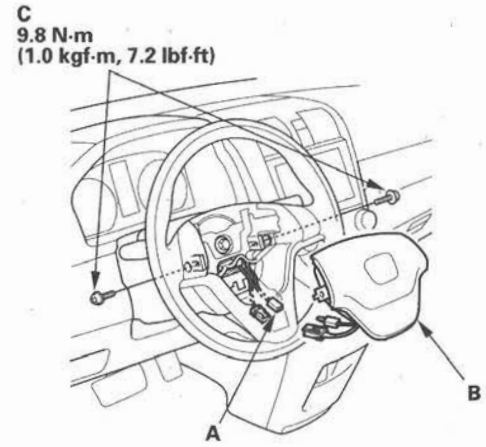

2. Place the driver's airbag in the steering wheel, and secure it with new TORX bolts (C).
3. Connect the cable reel 4P connector (A) to the driver's airbag 4P connector, then install the access panel (B) on the steering wheel.

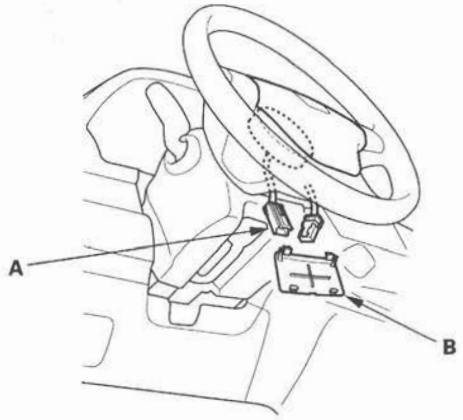

4. Connect the negative cable from the battery.
5. After installing the airbag, confirm proper system operation:
   - Turn the ignition switch ON (II); the SRS indicator should come on for about 6 seconds and then go off.
   - Make sure the horn works.

Front Passenger's Airbag Replacement

Removal

1. Disconnect the negative cable from the battery, and wait at least 3 minutes before beginning work.
2. Remove the passenger's vent panel (see page 20-104).
3. Remove the dashboard center upper panel (see page 20-93).
4. Remove the access panel (see step 5 on page 20-103).
5. Detach the hook of the glove box damper and release the glove box stop on each side from the dashboard by pushing them inside (see step 1 on page 20-105), then disconnect the front passenger's airbag 4P connector (A) from the dashboard wire harness.

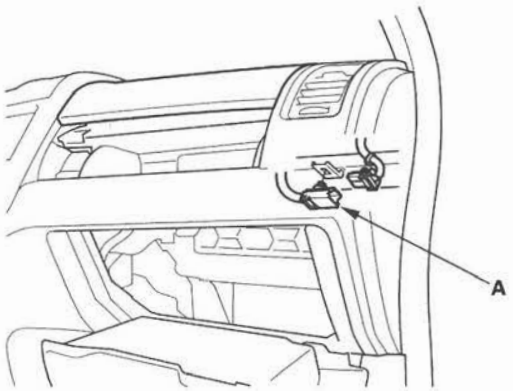

6. Remove the three mounting nuts (A) from the bracket. Using only your hands, first lift the front edge of the airbag, then lift the left side, then lift the right side, and remove the front passenger's airbag (B) from the dashboard.

NOTE: The airbag lid has pawls (C) on each side which attach it to the dashboard.

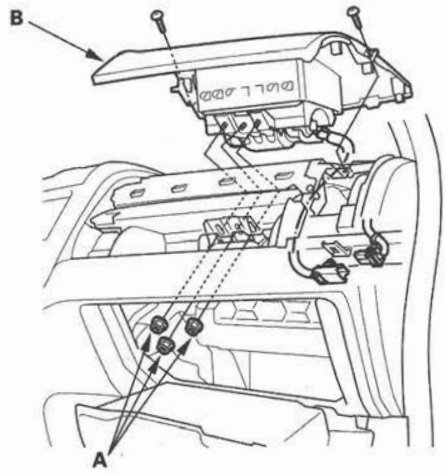

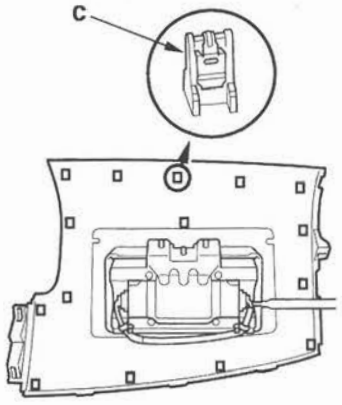

Installation

1. Place the new front passenger's airbag (A) into the dashboard. Tighten the front passenger's airbag mounting nuts (B).

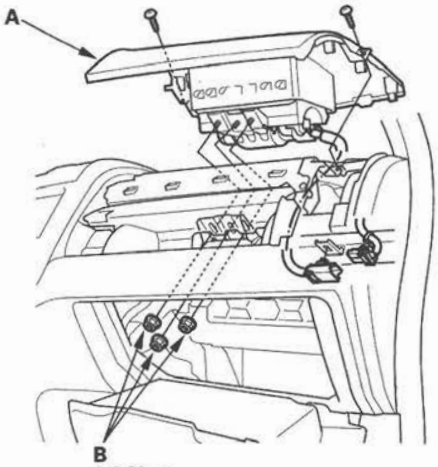

2. Connect the front passenger's airbag 4P connector (A) to dashboard wire harness, then reinstall the glove box.

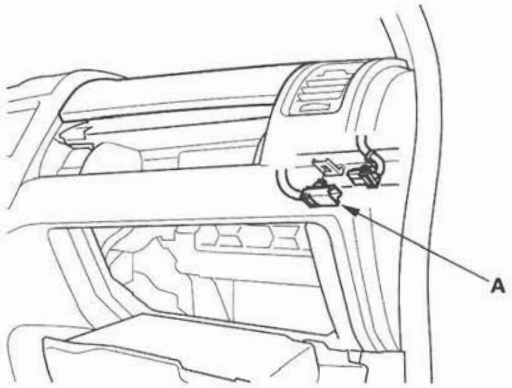

3. Install the access panel (see step 5 on page 20-103).
4. Install the dashboard center upper panel (see page 20-93).
5. Install the passenger's vent panel (see page 20-104).
6. Reconnect the negative cable to the battery.
7. After installing the airbag, confirm proper system operation: Turn the ignition switch ON (II); the SRS indicator should come on for about 6 seconds and then go off.

Side Airbag Replacement

NOTE: Review the seat replacement procedure before doing repairs or service (see page 20-118).

Removal

1. Disconnect the negative cable from the battery, and wait at least 3 minutes before beginning work.
2. Disconnect the side airbag harness 2P connector (A).



3. Remove the seat assembly (see page 20-118) and seat-back cover (see page 20-125).
4. Remove the mounting bolts (A), then remove the side airbag (B).

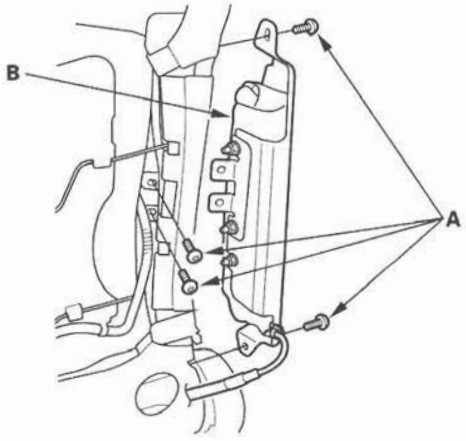

Installation

NOTE:
- If the side airbag lid is secured by tape, remove the tape.
- Use new mounting bolts tightened to the specified torque. When you replace a side airbag, make sure that the seat-back cover is installed properly. Improper installation may prevent proper deployment.
- Be sure to install the harness wires so that they are not pinched or interfering with other parts.

1. Place the new side airbag (A) on the seat-back frame (B). Tighten the side airbag mounting bolts (C).

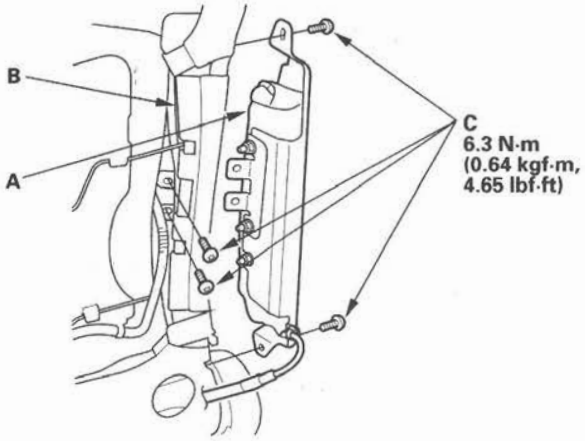

2. Install the seat-back cover in the reverse order of removal (see page 20-125).
3. Install the seat assembly (see page 20-118), then connect the side airbag harness 2P connector.
4. Move the front seat and the seat-back through their full ranges of movement, making sure the harness wires are not pinched or interfering with other parts.
5. Reconnect the negative cable to the battery.
6. After installing the side airbag, confirm proper system operation: Turn the ignition switch ON (II); the SRS indicator should come on for about 6 seconds and then go off.

Side Curtain Airbag Replacement

Removal

NOTE:
- Review the interior trim replacement procedure before performing repair or service (see page 20-74).
- Removal of the side curtain airbag must be performed according to the precautions/procedures described at the beginning of the SRS section (see page 24-15).
- The side curtain airbag system consists of the side curtain airbag module, including the roof trim, all grab handle, all grab handle brackets, and shielding protector. After the side curtain airbag has been deployed, replace these parts (see page 24-158).

1. Disconnect the negative cable from the battery, and wait at least 3 minutes before beginning work.

2. Remove the headliner (see page 20-83).

3. Disconnect the side curtain airbag 2P connector (A) from the side wire harness.

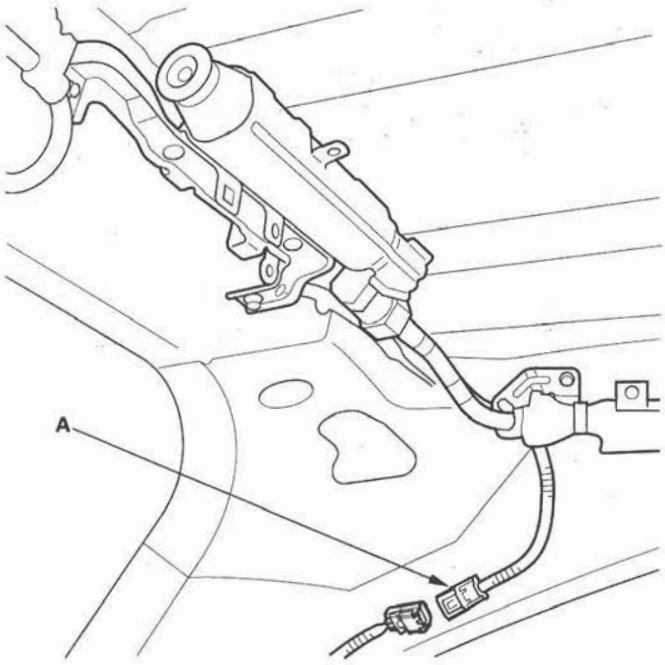

Left side shown; right side is similar.

(cont'd)

Side Curtain Airbag Replacement (cont'd)

4. Remove the mounting bolts (A) and mounting bolts (B) from the bracket. Detach clips (C) (not on all models), clips (D) and clips (E), then remove the side curtain airbag (F).

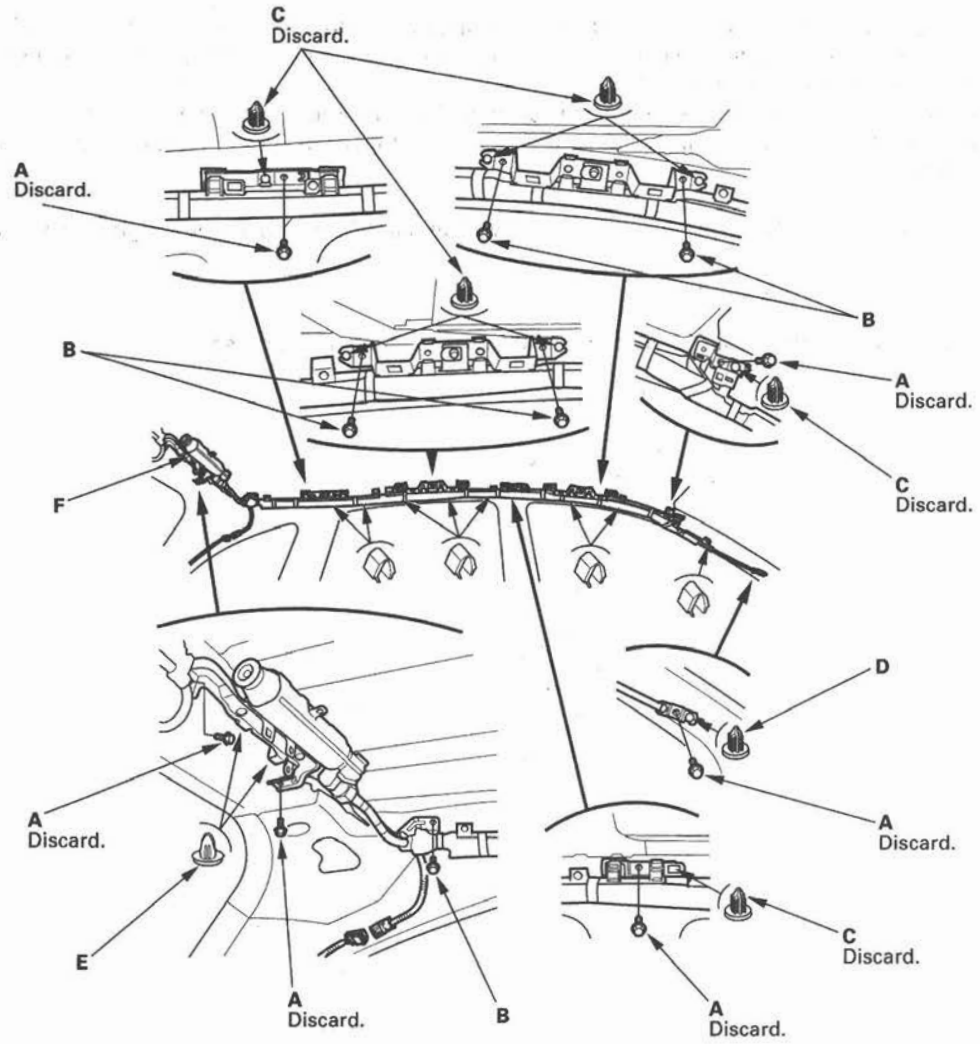

Left side shown; right side is similar.

Installation

NOTE:
- Installation of the side curtain airbag must be performed according to the precautions/procedures described at the beginning of the SRS section (see page 24-15).
- If the airbag is frayed, or has any other visible damage, replace it. Do not attempt to repair an airbag.
- When you install the airbag, make sure it is not twisted, and that it is not caught between the inflator bracket by the bracket bolts.
- Make sure that the side curtain airbag inflator retainer is installed properly. Otherwise the airbag could accidentally deploy and cause damage or injuries.

1. Place the new side curtain airbag assembly on the side of the roof. Tighten the side curtain airbag mounting bolts (A) and mounting bolts (B).

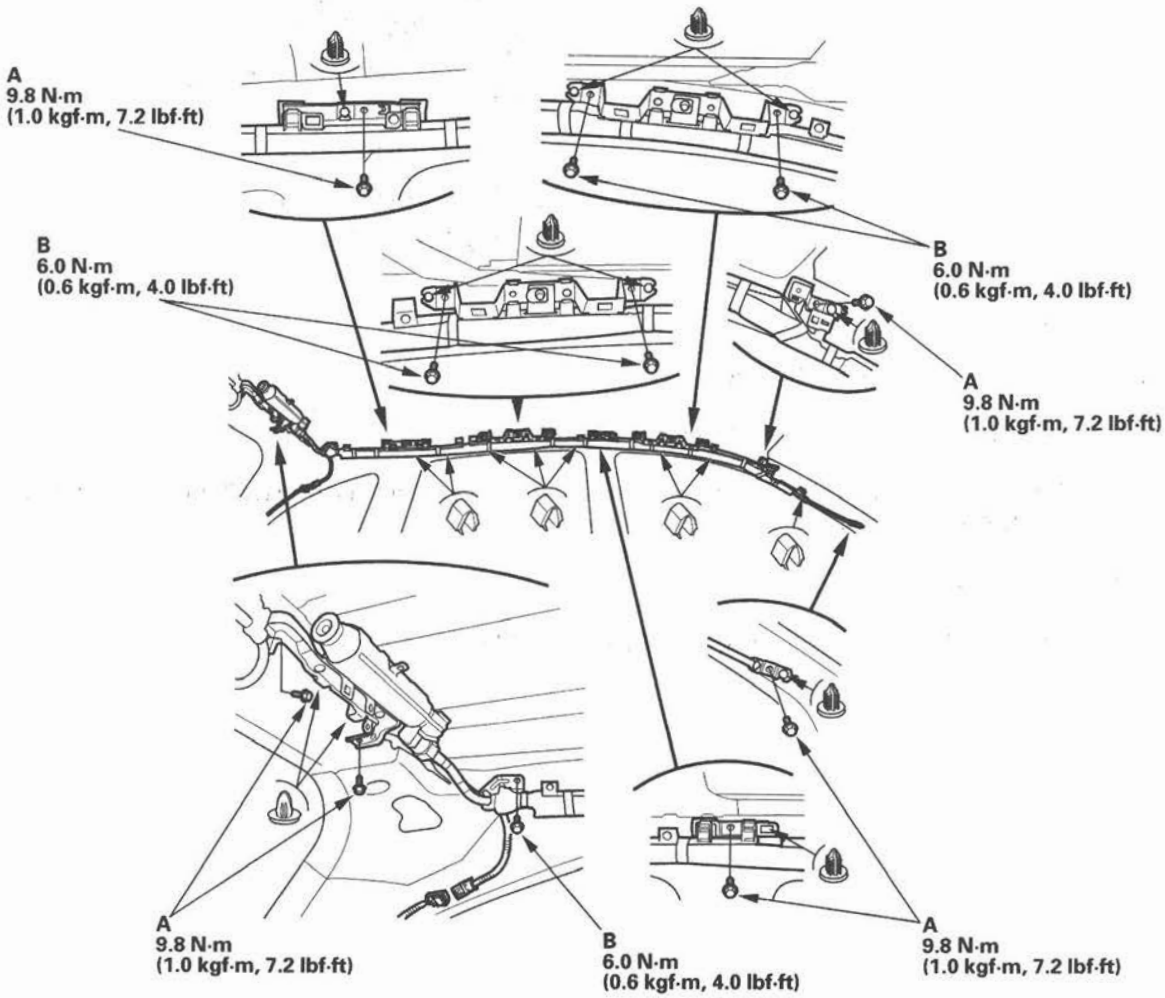

Left side shown; right side is similar.

(cont'd)

Side Curtain Airbag Replacement (cont'd)

2. Connect the side curtain airbag 2P connector (A) to the side wire harness.

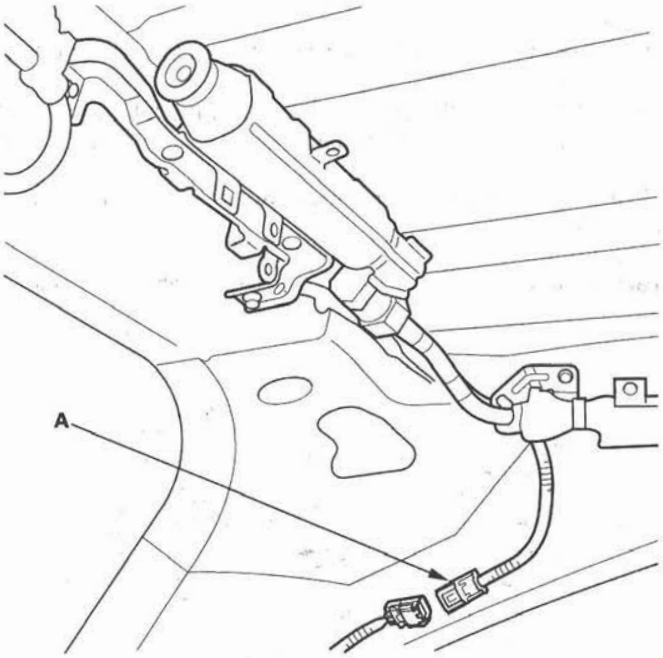

Left side shown; right side is similar.

3. Reconnect the negative cable to the battery.
4. Connect the HDS, and erase the DTCs (see page 24-26).
5. After installing the side curtain airbag, confirm proper system operation: Turn the ignition switch ON (II); the SRS indicator should come on for about 6 seconds and then go off.
6. Install all removed parts.
7. Confirm proper headliner/pillar trim overlap (see page 24-160).

Airbag and Tensioner Disposal

Special Tools Required
Deployment tool 07HAZ-SG00500

Before scrapping any airbags, side airbags, side curtain airbags, seat belt tensioners, or lap belt tensioner (including those in a whole vehicle to be scrapped), the part(s) must be deployed. If the vehicle is still within the warranty period, the Honda District Parts and Service Manager must give approval and/or special instruction before deploying the part(s). Only after the part(s) have been deployed (as the result of vehicle collision, for example), can they be scrapped.
If the parts appear intact (not deployed), treat them with extreme caution. Follow this procedure.

Deploying Airbags in the Vehicle

If an SRS equipped vehicle is to be entirely scrapped, its airbags, side airbags, side curtain airbags, seat belt tensioners, and lap belt tensioner should be deployed while still in the vehicle. These parts should not be considered as salvageable parts and should never be installed in another vehicle.

1. Turn the ignition switch OFF, then disconnect the negative cable from the battery, and wait at least 3 minutes.

2. Confirm that each airbag, side airbag, side curtain airbag, seat belt tensioner, or lap belt tensioner is securely mounted.

3. Confirm that the deployment tool is functioning properly by following the check procedure on the tool label.

Driver's Airbag

4. Remove the access panel (A) from the steering wheel then disconnect the driver's airbag 4P connector (B) from the cable reel.

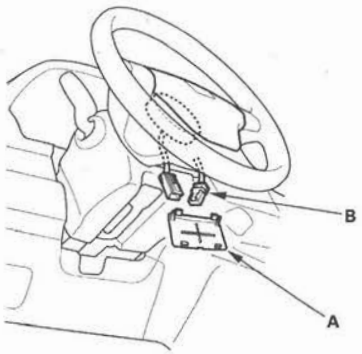

Front Passenger's Airbag

5. Remove the glove box, then disconnect the front passenger's airbag 4P connector (A) from the dashboard wire harness.

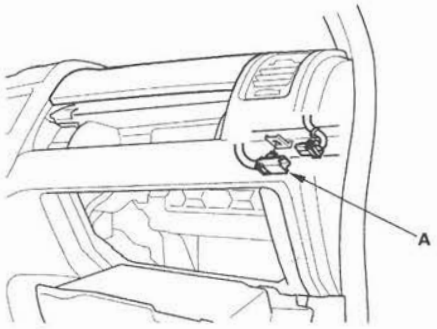

Side Airbag

6. Disconnect the side airbag 2P connector (A) from the floor wire harness or front passenger's seat subharness.



Side Curtain Airbag

7. Disconnect the side wire harness 2P connector (A) from the side curtain airbag.

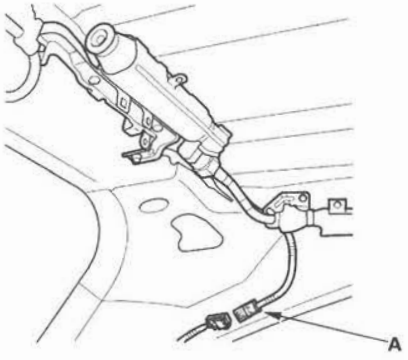

(cont'd)

Airbag and Tensioner Disposal (cont'd)

Seat Belt Tensioner

8. Disconnect the floor wire harness 4P connector (A) from the seat belt tensioner. Pull the seat belt out all the way and cut it.

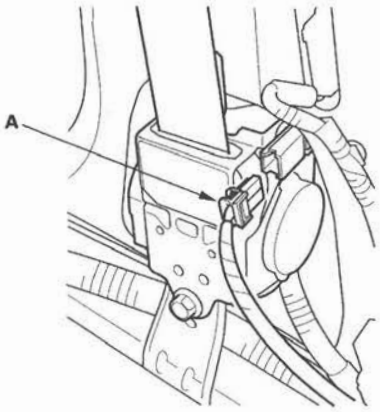

Seat Belt Buckle Tensioner

9. Disconnect the floor wire harness or front passenger's seat subharness 4P connector (A) from the seat belt buckle tensioner.



10. Cut off each connector, and strip the ends of the wires. Twist each pair of unlike colored wires together, and clip an alligator clip (A) from the deployment tool to each pair. Place the deployment tool at least 30 feet (10 meters) away from the vehicle.

NOTE: The driver's and front passenger's airbags have dual inflators. Twist each pair of unlike colored wires together, and clip an alligator clip to each pair.

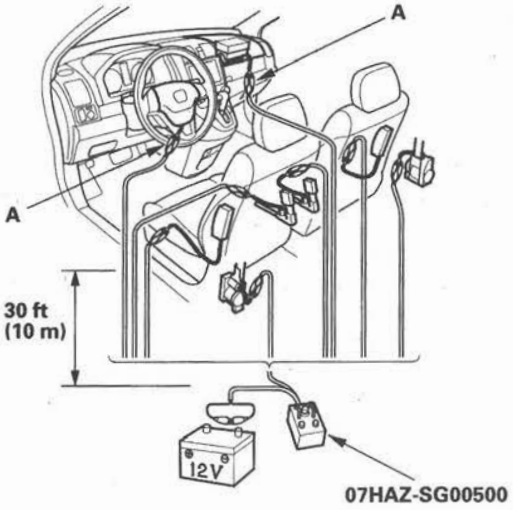

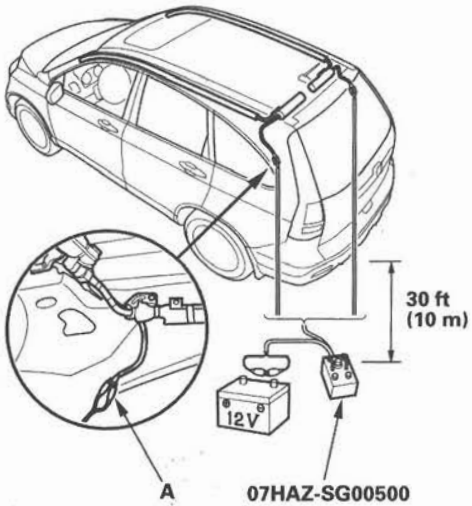

11. Connect a 12 volt battery to the tool.

    - If the green light on the tool comes on, the igniter circuit is defective and cannot deploy the component. Go to Disposal of Damaged Components.
    - If the red light on the tool comes on, the component is ready to be deployed.

12. Push the tool's deployment switch. The airbags and tensioners should deploy (deployment is both highly audible and visible: A loud noise and rapid inflation of the bag, followed by slow deflation).

    - If the components deploy and the green light on the tool comes on, continue with this procedure.
    - If a component does not deploy, yet the green light comes ON, its igniter is defective. Go to Disposal of Damaged Components.
    - During deployment, the airbags can become hot enough to burn you. Wait 30 minutes after deployment before touching the airbags.

13. Dispose of the complete airbag. No part of it can be reused. Place it in a sturdy plastic bag (A), and seal it securely. Dispose of the deployed airbag according to your local regulations.



Deploying Components Out of the Vehicle

If an intact airbag or tensioner has been removed from a scrapped vehicle, or has been found defective or damaged during transit, storage, or service, it should be deployed as follows:

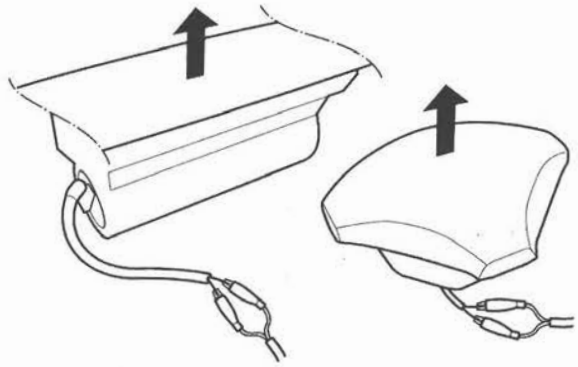

1. Confirm that the deployment tool is functioning properly by following the check procedure Deploying Airbags in the Vehicle on the tool label.

2. Position the airbag face up, outdoors, on flat ground, at least 30 feet (10 meters) from any obstacles or people.

3. Follow steps 9 through 12 of the in-vehicle deployment procedure.

   NOTE: The driver's and front passenger's airbags have dual inflators. Twist each pair of unlike colored wires together, and clip an alligator clip to each pair.

(cont'd)

Airbag and Tensioner Disposal (cont'd)

Disposal of Damaged Components

1. If installed in a vehicle, follow the removal procedure for the driver's airbag (see page 24-161), front passenger's airbag (see page 24-162), side airbag (see page 24-164), side curtain airbag (see page 24-165), and seat belt tensioner (see page 24-4).

2. In all cases, make a short circuit by cutting, stripping, and twisting together the two inflator wires.

   NOTE: The driver's and front passenger's airbags have dual inflators. The like color wires go to the individual inflators. Twist the like colored wires together.

3. Package the component in exactly the same packaging that the new replacement part came in.

4. Mark the outside of the box "DAMAGED AIRBAG NOT DEPLOYED," "DAMAGED SIDE AIRBAG NOT DEPLOYED," "DAMAGED SIDE CURTAIN AIRBAG NOT DEPLOYED," "DAMAGED SEAT BELT TENSIONER NOT DEPLOYED" so it does not get confused with your parts stock.

5. Contact your Honda District Parts and Service Manager for instructions on how and where to return it for disposal.

Deployment Tool Check

1. Connect the yellow clips to both the switch protector handles on the tool and connect the tool to a vehicle battery.

2. Push the operation switch: green light means the tool is OK; a red light means the tool is faulty.

3. Disconnect the yellow clips from the battery.

Cable Reel Replacement

Removal

1. Make sure the front wheels are aligned straight ahead.

2. Disconnect the negative cable from the battery, and wait at least 3 minutes.

3. Remove the driver's airbag (see page 24-161).

4. Disconnect the connector (A) from the cable reel, then remove the steering wheel bolt (B).

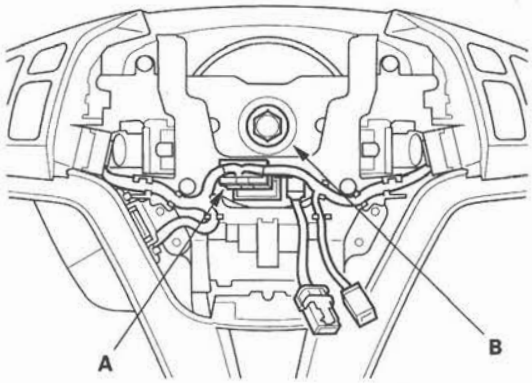

5. Confirm that the front wheels point straight ahead, then remove the steering wheel with a steering wheel puller (see step 6 on page 17-22).
Do not tap on the steering wheel or steering column shaft when removing the steering wheel.

6. Remove the driver's dashboard undercover (see page 20-100).

7. Remove the column cover screws (A), then remove the column covers (B, C).

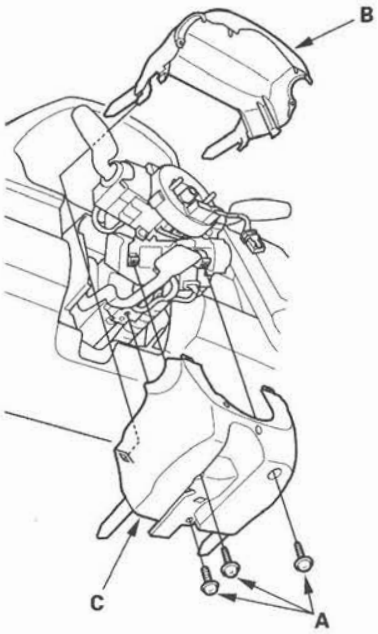

(cont'd)

Cable Reel Replacement (cont'd)

8. Disconnect the dashboard wire harness 4P connector (A) from the cable reel 4P connector (B), then disconnect the dashboard wire harness 13P or 5P connector (C) from the cable reel (D).

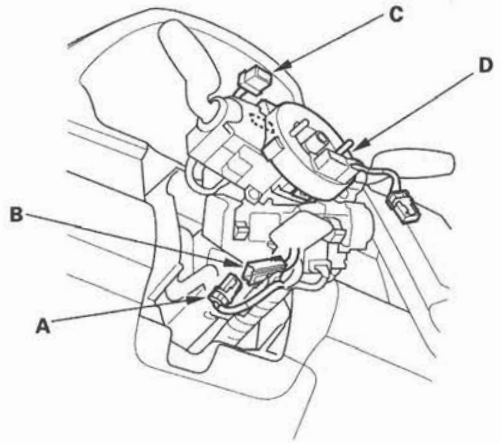

9. Release the lock tab (A) under the cable reel connector with a 90 ° hook shaped tool (B). Slide the tool below the cable reel connector just above the lock tab. Release the lower lock tab (C), and slide the cable reel off the column.

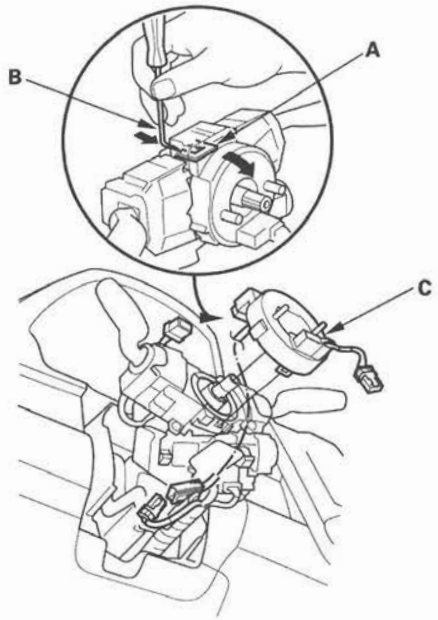

Installation

1. Before installing the steering wheel, align the front wheels straight ahead.
2. If not already done, disconnect the negative cable from the battery, and wait at least 3 minutes.
3. Set the turn signal canceling sleeve (A) so that the projections (B) are aligned vertically.

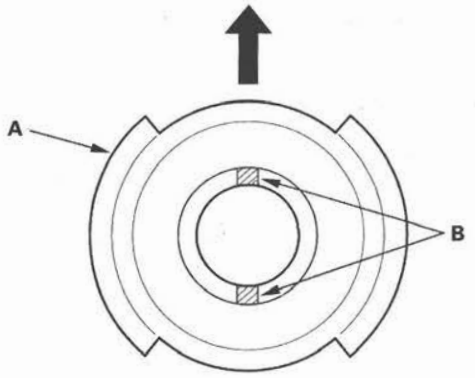

4. Carefully install the cable reel (A) on the steering column shaft. Then connect 13P or 5P connector (B) to the cable reel, and connect the 4P connector (C) to the dashboard wire harness 4P connector (D).

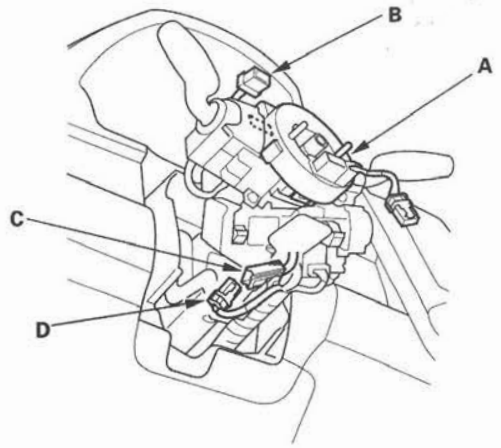

5. Install the steering column covers.

6. If necessary, center the cable reel (New replacement cable reels come centered.). Do this by first rotating the cable reel clockwise until it stops. Then rotate it counterclockwise (about three turns) until the arrow mark (A) on the cable reel label points straight up.

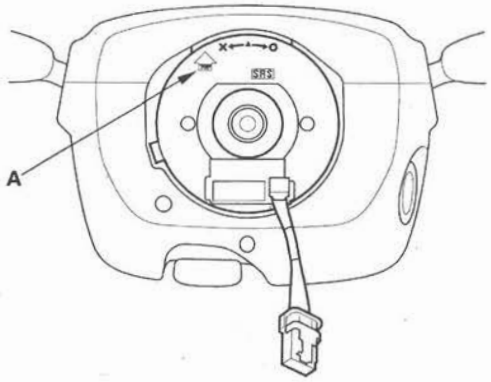

7. Position the two tabs (A) of the turn signal canceling sleeve (B) as shown, and install the steering wheel on to the steering column shaft, making sure the steering wheel hub (C) engages the pins (D) of the cable reel and tabs of the turn signal canceling sleeve. Do not tap on the steering wheel or steering column shaft when installing the steering wheel.

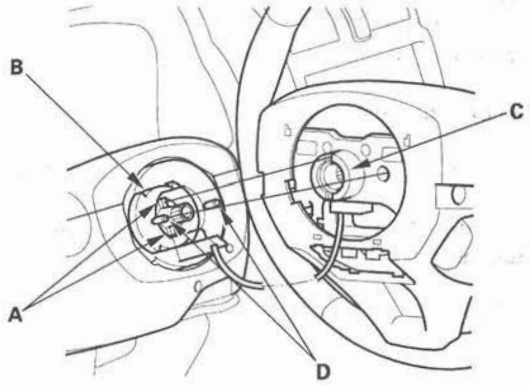

8. Install a new steering wheel bolt (A), then reconnect the connectors.

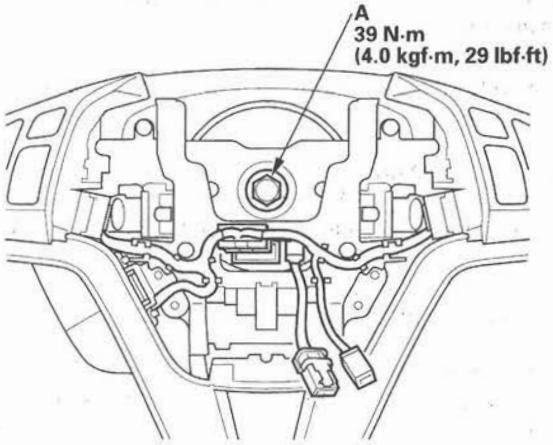

9. Install the driver's airbag (see page 24-161).

10. Reconnect the negative cable to the battery.

11. After installing the cable reel, confirm proper system operation:

    - Turn the ignition switch ON (II); the SRS indicator should come on for about 6 seconds and then go off.
    - After the SRS indicator has turned off, turn the steering wheel fully left and right to confirm the SRS indicator does not come on.
    - Make sure the horn works.
    - Make sure the cruise control buttons work.
    - Make sure the steering shift switches work.

SRS Unit Replacement

Removal

NOTE: If you are only disconnecting SRS unit connector A, skip step 2.

1. Disconnect the negative cable from the battery, and wait at least 3 minutes before beginning work.
2. Disconnect both seat belt tensioner connectors (see step 7 on page 24-24) and both seat belt buckle tensioner connectors (see step 8 on page 24-24).
3. Remove the dashboard center lower cover (see page 20-95).
4. Disconnect the connector A, connector B, and remove the TORX bolts (C), then pull out the SRS unit.

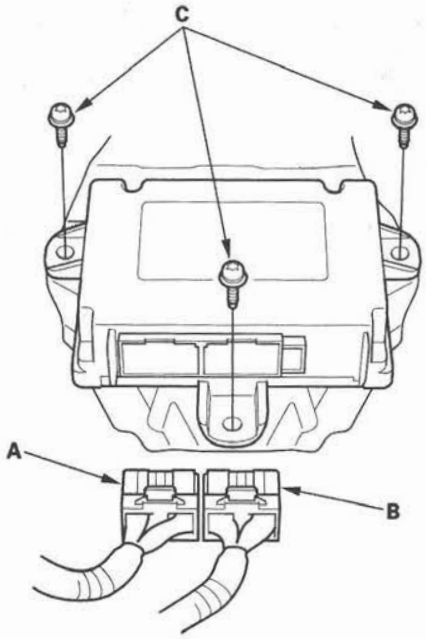

Installation

1. Install the new SRS unit (A) with new TORX bolts (B), then connect the connectors (C) to the SRS unit; push them into position until they click.

   NOTE: Be sure the SRS unit is sitting squarely against its bracket before torquing the TORX bolts.

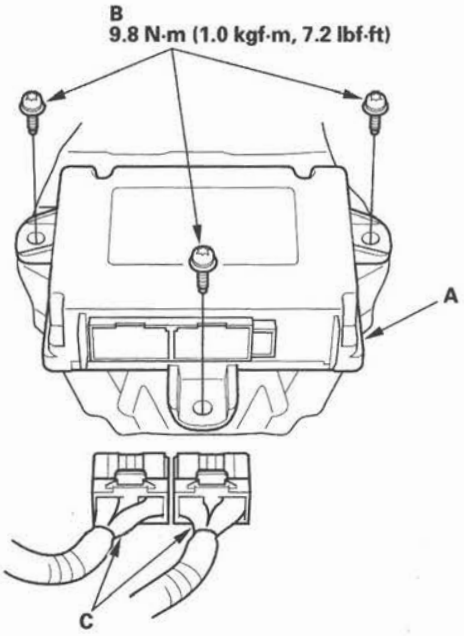

2. Reconnect both seat belt tensioner connectors (see step 7 on page 24-24) and seat belt buckle tensioner connector (see step 8 on page 24-24).
3. Reconnect the negative cable to the battery.
4. After installing the SRS unit, confirm proper system operation: Turn the ignition switch ON (II); the SRS indicator should come on for about 6 seconds and then go off.
5. Reinstall all removed parts.

Side Impact Sensor (First) Replacement

NOTE: Review the seat replacement procedure (see page 20-118) before doing repairs or service.

Removal

1. Disconnect the negative cable from the battery, and wait at least 3 minutes before beginning work.
2. Disconnect the appropriate side airbag 2P connector (see step 4 on page 24-23).
3. Remove the front seat assembly (see page 20-118).
4. Remove the lower B-pillar lower trim (see page 20-72).
5. Disconnect the floor wire harness 2P connector from the side impact sensor (first).
6. Using a TORX T30 bit, remove the TORX bolt (A), then remove the side impact sensor (first) (B).

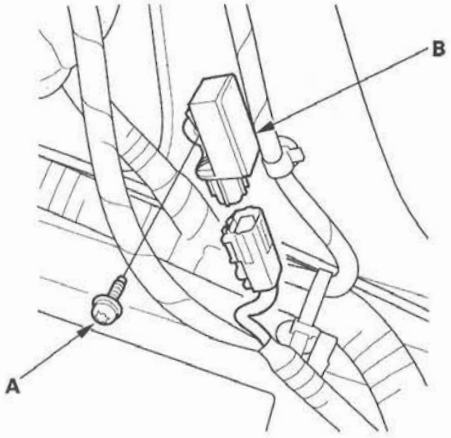

Installation

1. Install the new side impact sensor (first) with the TORX bolt (A), then connect the floor wire harness 2P connector (B) to the side impact sensor (first).

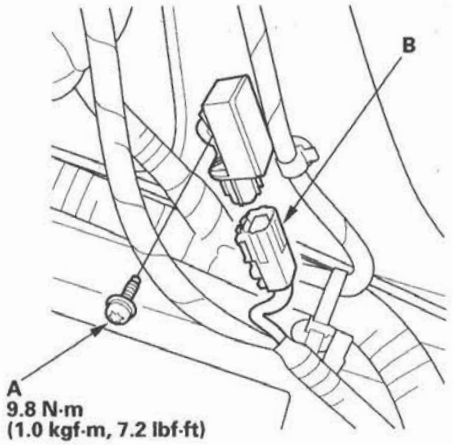

2. Reconnect the negative cable to the battery.
3. After installing the side impact sensor (first) confirm proper system operation: Turn the ignition switch ON (II); the SRS indicator should come on for about 6 seconds and then go off.
4. Reinstall all removed parts.

Side Impact Sensor (Second) Replacement

Removal

1. Disconnect the negative cable from the battery, and wait at least 3 minutes before beginning work.
2. Disconnect the appropriate side curtain airbag 2P connector (see step 5 on page 24-23).
3. Remove the quarter piller glass trim (see page 20-74).
4. Disconnect the side wire harness 2P connector from the side impact sensor (second).
5. Using a TORX T30 bit, remove the TORX bolt (A), then remove the side impact sensor (second) (B).

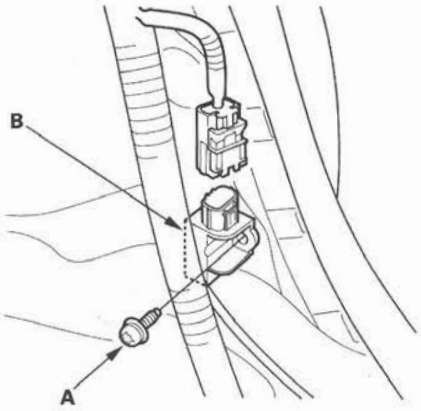

Installation

1. Install the new side impact sensor (second) with the TORX bolt (A), then connect floor wire harness 2P connector (B) to the side impact sensor (second).

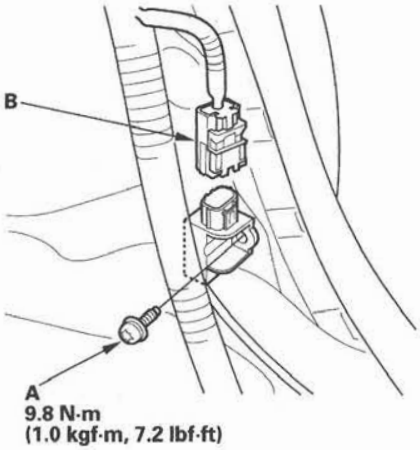

2. Reconnect the negative cable to the battery.
3. After installing the side impact sensor (second), confirm proper system operation: Turn the ignition switch ON (II); the SRS indicator should come on for about 6 seconds and then go off.
4. Reinstall all removed parts.

Front Passenger's Weight Sensor Replacement

Removal

NOTE: Removal of the front passenger's weight sensors must be performed according to the precautions/ procedures described at the beginning of the SRS section (see page 24-15).

1. Disconnect the negative cable from the battery, and wait at least 3 minutes before beginning work.
2. Remove the front passenger's seat assembly section (see page 20-118).
3. Remove the cushion cover/pad from the seat cushion frame (see page 20-130).
4. Using a TORX E18 socket, remove the TORX nuts (A) attaching the seat track (B) to the weight sensors (C).

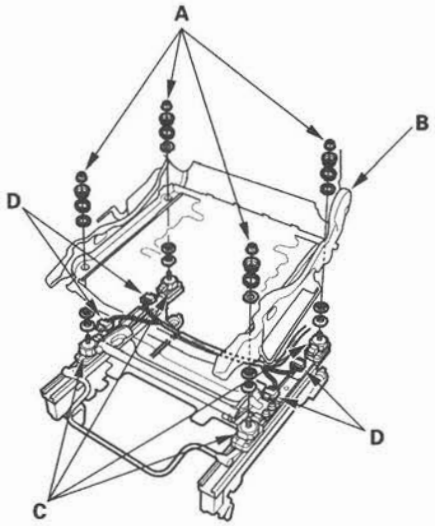

5. Disconnect the sensor connectors (D) from the seat weight sensor, then remove the front passenger's weight sensors.

Installation

NOTE:
- Be sure to install the harness wires so they are not pinched or interfering with other parts.
- A spacer has front and back faces. Be sure to install the spacer correctly.

1. Install the new front passenger's weight sensors under the seat track.

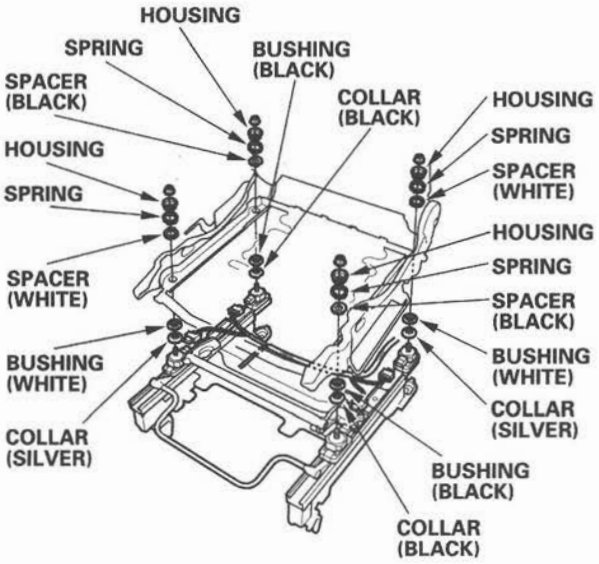

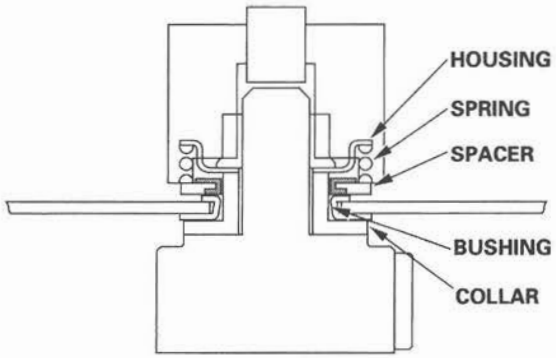

(cont'd)

Front Passenger's Weight Sensor Replacement (cont'd)

2. When tightening the TORX nuts (A), begin with ①, and tighten them in a crisscross pattern in two or more steps.

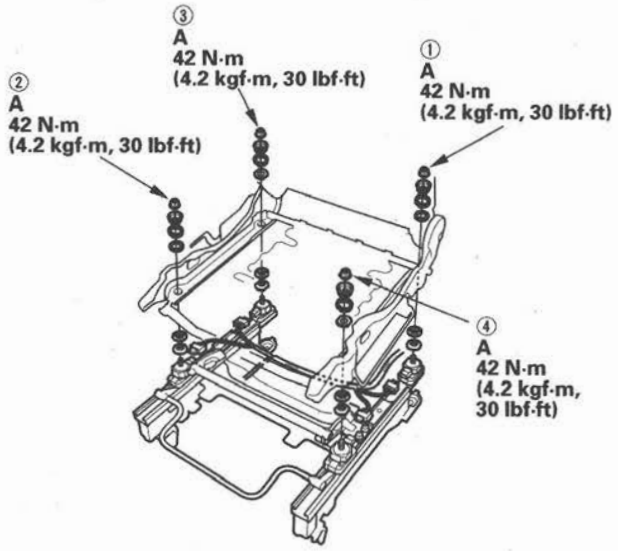

3. Torque the TORX nuts in the sequence shown in two or more steps.

4. Reassemble the front passenger's seat cushion cover/pad (see page 20-130).

5. Reinstall the front passenger's seat (see page 20-118).

6. Reconnect the negative cable to the battery.

7. Calibrate the ODS unit (see page 24-29).

8. After installing the front passenger's weight sensors, confirm proper system operation: Turn the ignition switch ON (II); the SRS indicator should come for about 6 seconds and then go off.

ODS Unit Replacement

NOTE: Review the seat replacement procedure (see page 20-118) before doing repairs or service.

Removal

1. Disconnect the negative cable from the battery, and wait at least 3 minutes before beginning work.
2. Disconnect the front passenger's side airbag 2P connector (see step 3 on page 24-23).
3. Remove the passenger's seat assembly (see page 20-118) and seat-back cover (see page 20-125).
4. Disconnect the ODS unit 18P connector (A) and sensor connectors (B) from the ODS unit (C).

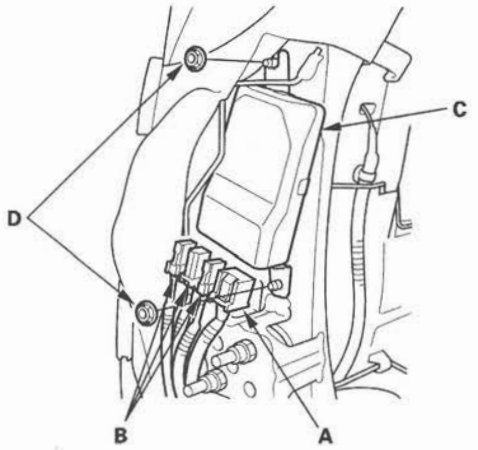

5. Remove the two nuts (D) and the ODS unit.

Installation

1. Place the new ODS unit (A) on the seat-back frame. Tighten the two nuts (B), and connect the ODS unit 18P connector (C) and sensor connectors (D) to the ODS unit.

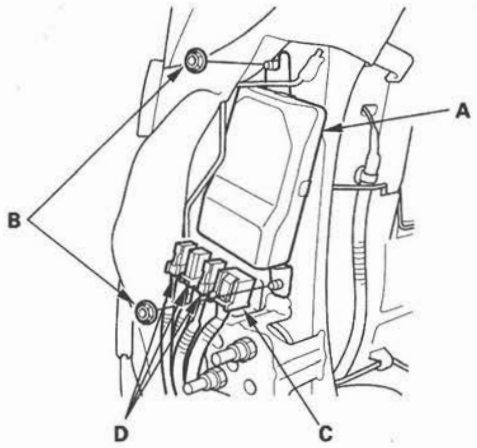

2. Install the seat-back cover in the reverse order of removal.
3. Install the seat assembly (see page 20-118), then connect the side airbag 2P connector.
4. Reconnect the negative cable to the battery.
5. Set the seat-back in the normal position, and make sure there is nothing on the front passenger's seat.
6. Initialize the ODS unit (see page 24-28).
7. After installing the ODS unit, confirm proper system operation: Turn the ignition switch ON (II); the SRS indicator should come on for about 6 seconds and then go off.

Front Impact Sensor Replacement

Removal

1. Disconnect the negative cable from the battery, and wait at least 3 minutes before beginning work.
2. Disconnect the driver's airbag 4P connector (see step 2 on page 24-23), the front passenger's airbag 4P connector (see step 3 on page 24-23), both seat belt tensioner 4P connectors (see step 7 on page 24-24), and both seat belt buckle tensioner 2P connectors (see step 8 on page 24-24).
3. Remove the front inner fender (see page 20-181).
4. Disconnect the engine compartment wire harness 2P connector (A). Using a TORX T30 bit, remove the TORX bolt (B), then remove the front impact sensor (C).

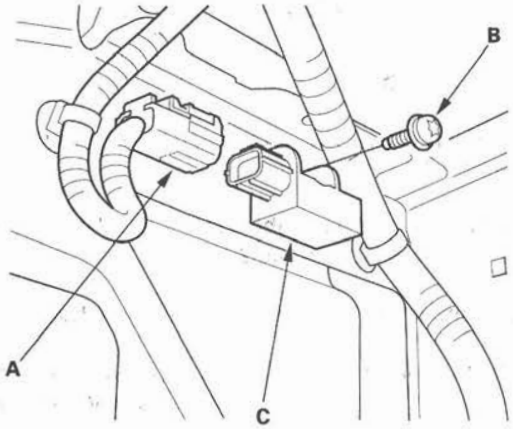

Installation

1. Install the new front impact sensor with a new TORX bolt (A), then connect the engine compartment wire harness 2P connector (B) to the front impact sensor (C).

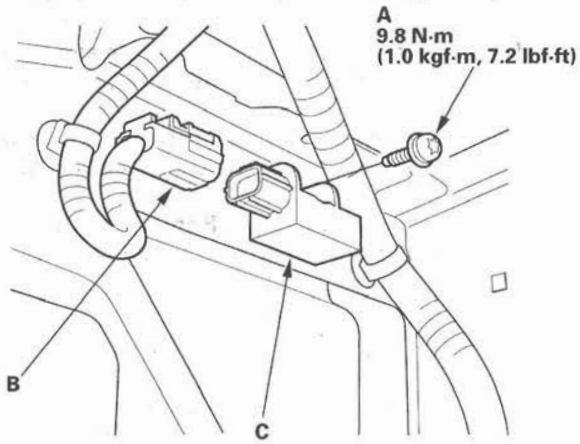

2. Reconnect the negative cable to the battery.
3. After installing the front impact sensor, confirm proper system operation: Turn the ignition switch ON (II); the SRS indicator should come on for about 6 seconds and then go off.
4. Reinstall all removed parts.

Driver's Seat Position Sensor Replacement

Removal

NOTE:
- Removal of the driver's seat position sensor must be performed according to the precautions/procedures described at the beginning of SRS section (see page 24-15).
- Do not turn the ignition switch ON (II), and do not connect the battery cable while removing the driver's seat position sensor.

1. Disconnect the negative cable from the battery, and wait at least 3 minutes before beginning work.
2. Disconnect the driver's airbag 4P connector (see step 2 on page 24-23).
3. Remove the driver's seat assembly (see page 20-118).
4. Disconnect the seat position sensor harness 2P connector (A) from the driver's seat position sensor.

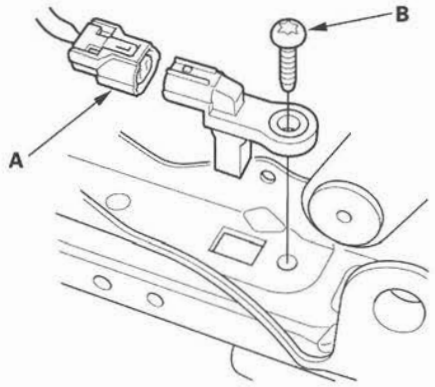

5. Using a TORX T30 bit, remove the TORX bolt (B), then remove the driver's seat position sensor.

Installation

NOTE:
- Be sure to install the harness so it does not pinched or interfere with other parts.
- Do not turn the ignition switch ON (II), and do not connect the battery cable while installing the driver's seat position sensor.
- After installing the driver's seat position sensor, make sure it is clean. Keep it away from dust.

1. Install the new driver's seat position sensor with a TORX bolt (A), then connect the floor wire harness or seat position sensor harness 2P connector to the driver's seat position sensor (B).

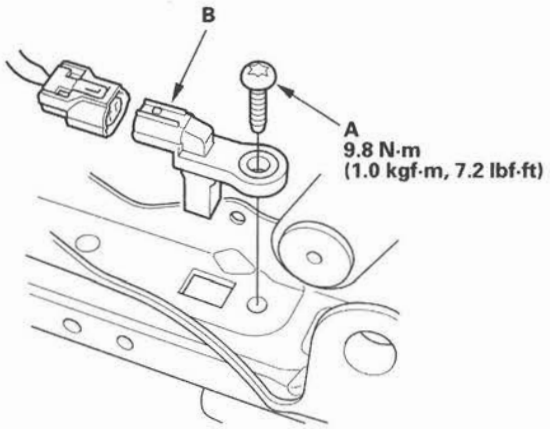

2. Install the driver's seat assembly (see page 20-118).
3. Reconnect the negative cable to the battery.
4. Check the operation of the driver's seat position sensor with the HDS (see page 24-31).

Passenger's Airbag Cutoff Indicator Illumination Bulb Test

1. Remove the dashboard center vent panel (see page 20-93).

2. Disconnect the 6P connector (A) from the passenger's airbag cutoff indicator (B).

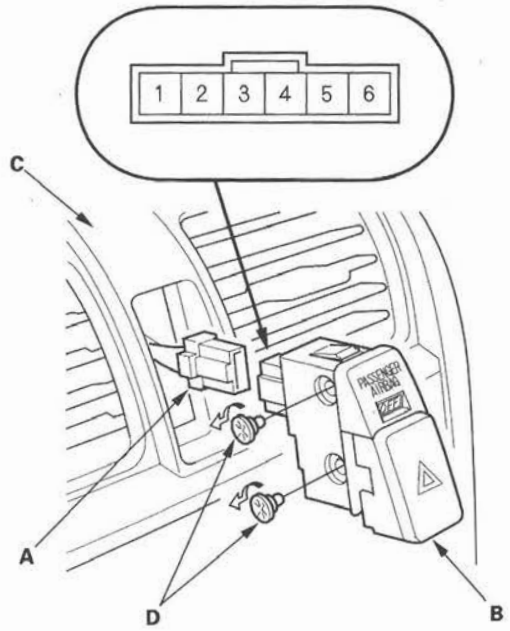

3. Push out the passenger's airbag cutoff indicator from behind the center vent panel (C).

4. Check for continuity between the No. 3 and No. 4 terminals of the indicator. If there is no continuity, replace the bulb (D).

   NOTE: Both illumination bulbs are connected in parallel. If there is continuity, remove the upper, hazard switch illumination bulb, and recheck for continuity. If there is no continuity, replace the lower, passenger's airbag cutoff indicator illumination bulb.

5. Reinstall the parts in the reverse order of removal.